TROUBLESHOOTING

CL03Y-02

PROBLEM SYMPTOMS TABLE

Use the table below to help you find the cause of the problem. The numbers indicate the priority of the likely cause of the problem. Check each part in order. If necessary, replace these parts.

Symptom	Suspect Area	See page
Clutch grabs/chatters	1. Engine mounting (Loosen)	-
	2. Clutch disc (Runout is excessive)	CL-15 CL-20
	3. Clutch disc (Oily)	CL-15 CL-20
	4. Clutch disc (Worn out)	CL-15 CL-20
	5. Clutch disc (Damaged torsion rubber)	CL-15 CL-20
	6. Clutch disc (Glazed)	CL-15 CL-20
	7. Diaphragm spring (Out of tip alignment)	CL-19 CL-25
Clutch pedal spongy	1. Clutch line (Air in line)	-
	2. Master cylinder cup (Damaged)	CL-5
	3. Release cylinder cup (Damaged)	CL-10
Clutch noisy	1. Release bearing (Worn, dirty or damaged)	CL-15 CL-20
	2. Pilot bearing (Worn or damaged)	CL-15 CL-20
	3. Input shaft bearing (Worn, dirty or damaged)	-
	4. Clutch disc torsion rubber (Damaged)	CL-15 CL-20

Clutch slips	1. Clutch pedal (Freeplay out of adjustment)	CL-3
	2. Clutch disc (Oily)	CL-15 CL-20
	3. Clutch disc (Worn out)	CL-15 CL-20
	4. Diaphragm spring (Damaged)	CL-15 CL-20
	5. Pressure plate (Distortion)	CL-15 CL-20
	6. Flywheel (Distortion)	-
Clutch does not disengage	1. Clutch pedal (Freeplay out of adjustment)	CL-3
	2. Clutch line (Air in line)	-
	3. Master cylinder cup (Damaged)	CL-5
	4. Release cylinder cup (Damaged)	CL-10
	5. Input shaft bearing (Worn, dirty or damaged)	-
	6. Pilot bearing (Worn or damaged)	CL-15 CL-20
	7. Clutch disc (Out of true)	CL-15 CL-20
	8. Clutch disc (Runout is excessive)	CL-15 CL-20
	9. Clutch disc (Lining broken)	CL-15 CL-20
	10. Clutch disc (Dirty or burred)	CL-15 CL-20
	11. Clutch disc (Oily)	CL-15 CL-20
	12. Clutch disc (Lack of spline grease)	CL-19 CL-25
	13. Diaphragm spring (Damaged)	CL-15 CL-20
	14. Diaphragm spring (Out of tip alignment)	CL-19 CL-25
	15. Pressure plate (Distortion)	CL-15 CL-20

CLUTCH RELEASE CYLINDER

CL045-02

COMPONENTS

2JZ-GE:

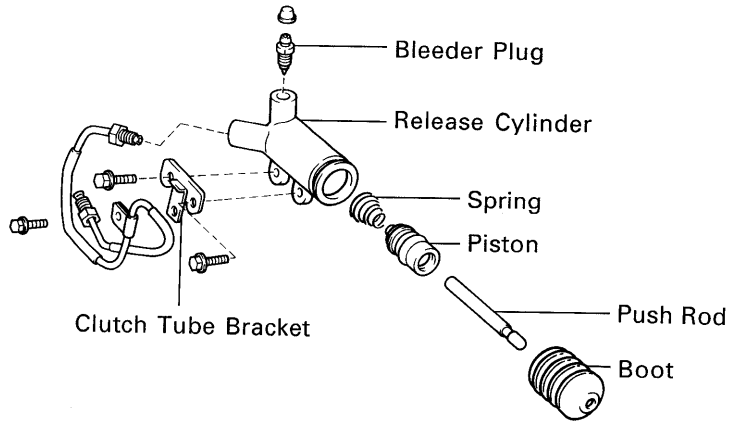

2JZ-GTE:

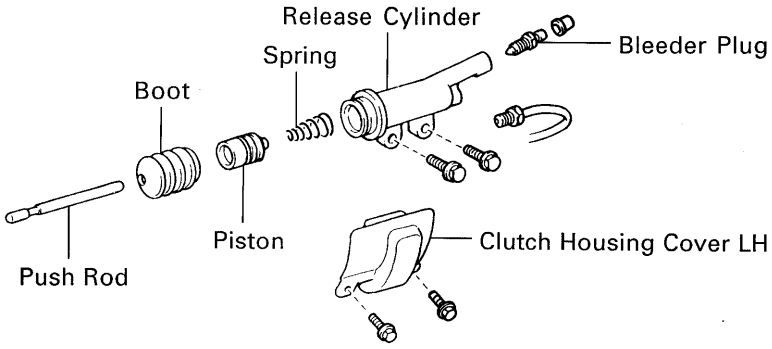

Q06259
Q06261

Z16902

CL0AB-01

REMOVAL

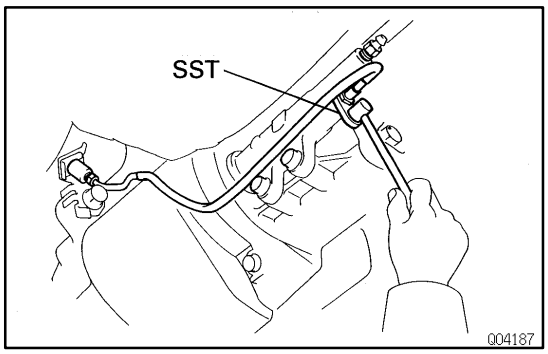

1. 2JZ - GTE:
REMOVE CLUTCH HOUSING COVER LH

Remove the 2 bolts.

Torque: 12 N·m (120 kgf·cm, 9 ft·lbf)

2. 2JZ - GTE:
DISCONNECT CLUTCH LINE

Using SST, disconnect the clutch line union. Use a container to catch the fluid.

SST 09023-00100

Torque: 15 N·m (155 kgf·cm, 11 ft·lbf)

3. 2JZ - GTE:
REMOVE 2 BOLTS AND PULL OUT RELEASE CYLINDER

Torque: 12 N·m (120 kgf·cm, 9 ft·lbf)

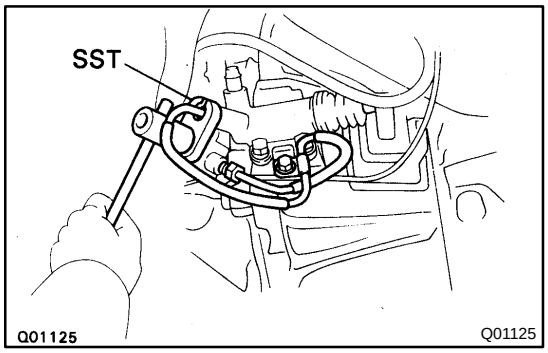

4. 2JZ - GE:
DISCONNECT CLUTCH LINE

Using SST, disconnect the clutch line union. Use a container to catch the fluid.

SST 09023-00100

Torque: 15 N·m (155 kgf·cm, 11 ft·lbf)

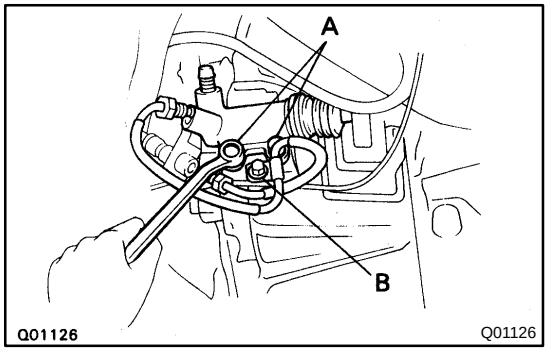

5. 2JZ - GE:
REMOVE RELEASE CYLINDER WITH 3 BOLTS

Torque:

Bolt A: 12 N·m (120 kgf·cm, 9 ft·lbf)

Bolt B: 4.9 N·m (50 kgf·cm, 43 in.·lbf)

CL047-01

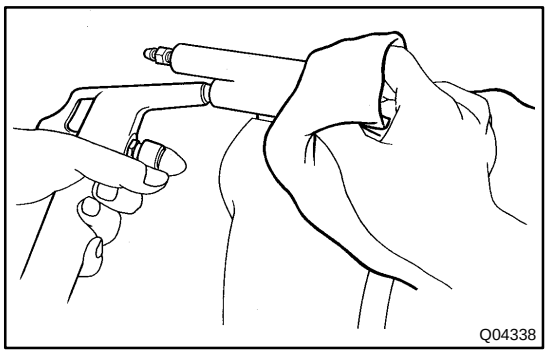

DISASSEMBLY

1. PULL OUT PUSH ROD WITH BOOT

2. REMOVE PISTON WITH SPRING

Using compressed air, remove the piston and spring from the cylinder.

CL048-01

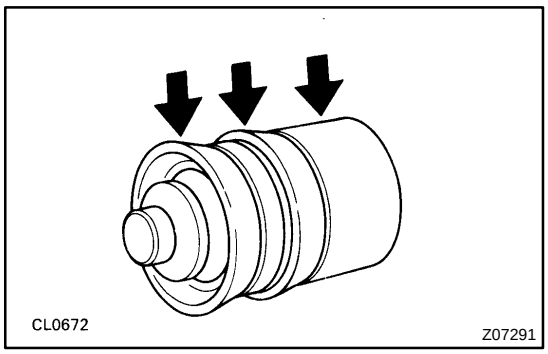

REASSEMBLY

1. **COAT PISTON WITH LITHIUM SOAP BASE GLYCOL GREASE, AS SHOWN**
2. **INSTALL PISTON WITH SPRING INTO CYLINDER**
3. **INSTALL BOOT WITH PUSH ROD TO CYLINDER**

CLUTCH UNIT (2JZ-GTE)

CL04A-03

COMPONENTS

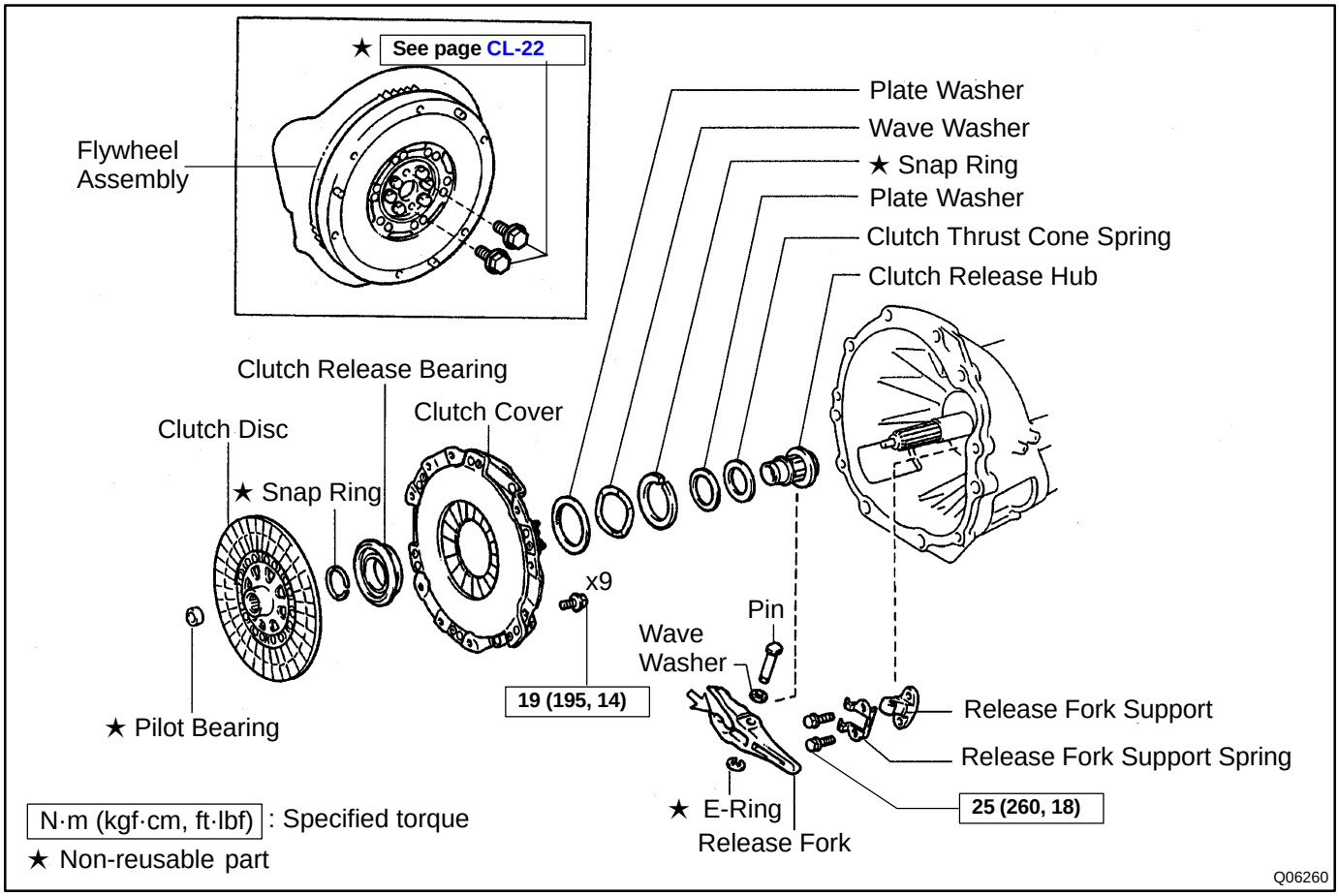

CL04B-02

REMOVAL

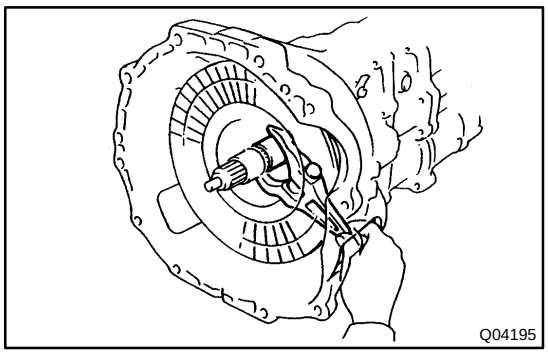
Q04195

1. REMOVE TRANSMISSION FROM ENGINE
(See page MT-2)

HINT:

Do not drain the transmission oil.

2. REMOVE RELEASE FORK ASSEMBLY

(a) Remove the release fork assembly from the left side of clutch housing service hole.

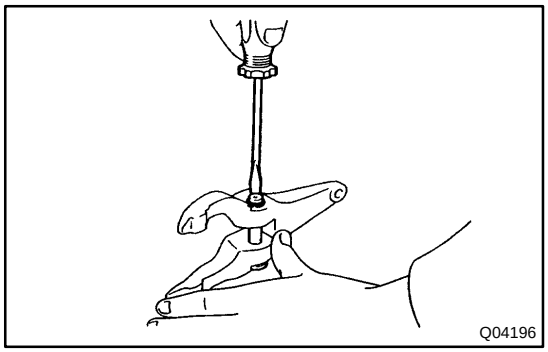
Q04196

(b) Remove the E-ring from the release fork.

(c) Remove the pin and wave washer from the release fork.

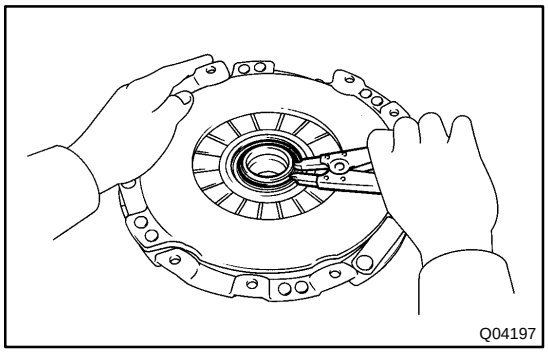
Q04197

3. REMOVE CLUTCH DISC

4. REMOVE CLUTCH COVER ASSEMBLY

5. REMOVE CLUTCH RELEASE BEARING HUB

(a) Using a snap ring expander, remove the snap ring.

(b) Remove the release bearing hub, thrust cone spring and plate washer.

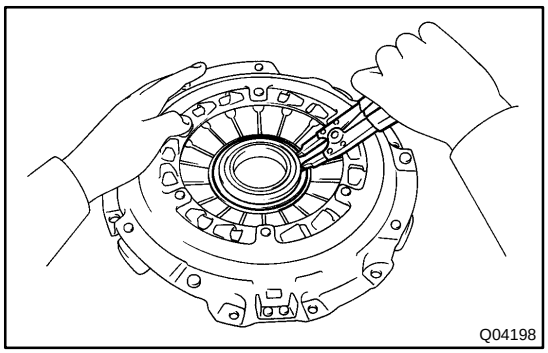
Q04198

6. REMOVE CLUTCH RELEASE BEARING

(a) Using a snap ring expander, remove the snap ring.

(b) Remove the release bearing, wave washer and plate washer.

CL04C-02

INSPECTION

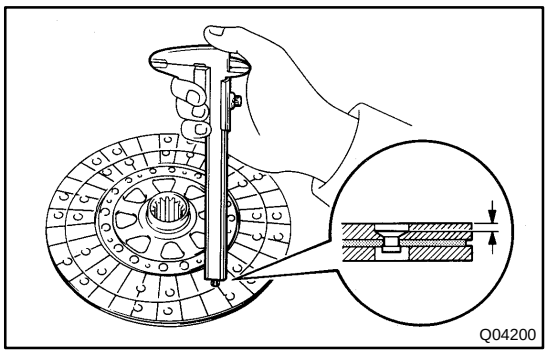

1. INSPECT CLUTCH DISC FOR WEAR OR DAMAGE

Using calipers, measure the rivet head depth.

Maximum rivet depth: 0.3 mm (0.012 in.)

If necessary, replace the clutch disc.

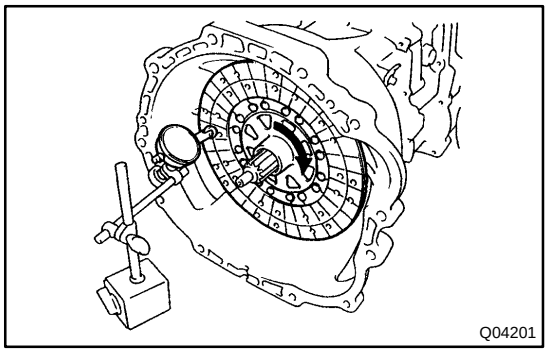

2. INSPECT CLUTCH DISC RUNOUT

Using a dial indicator, check the disc runout.

Maximum runout: 0.8 mm (0.031 in.)

If the runout is excessive, replace the clutch disc.

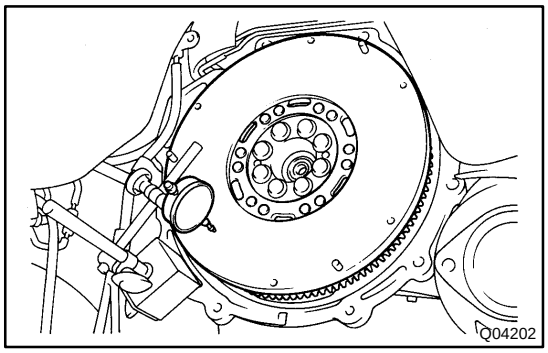

3. INSPECT FLYWHEEL RUNOUT

Using a dial indicator, check the flywheel runout.

Maximum runout: 0.1 mm (0.004 in.)

If the runout is excessive, replace the flywheel.

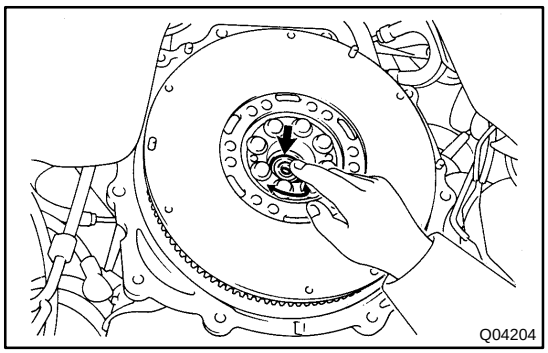

4. INSPECT PILOT BEARING

Turn the bearing by hand while applying force in the axial direction.

If the bearing sticks or has much resistance, replace the pilot bearing.

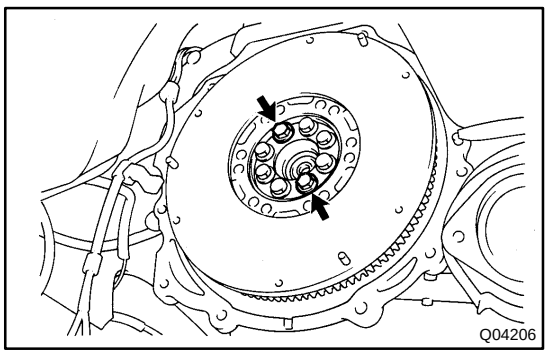

5. IF NECESSARY, REPLACE PILOT BEARING

(a) Remove the 2 bolts at the diametrically opposite points.

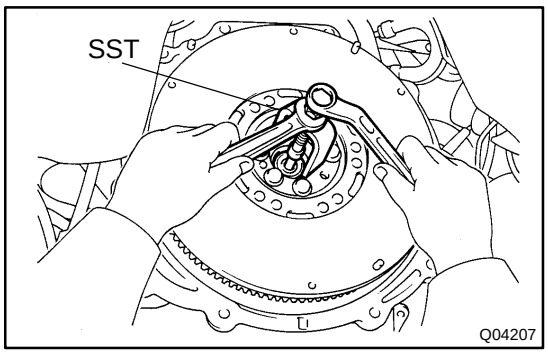

(b) Using SST, remove the pilot bearing.
SST 09303-3501 1

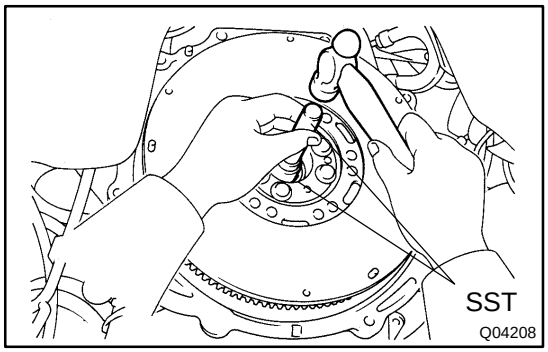

(c) Using SST and a hammer, drive in a new pilot bearing.
SST 09301-001 10

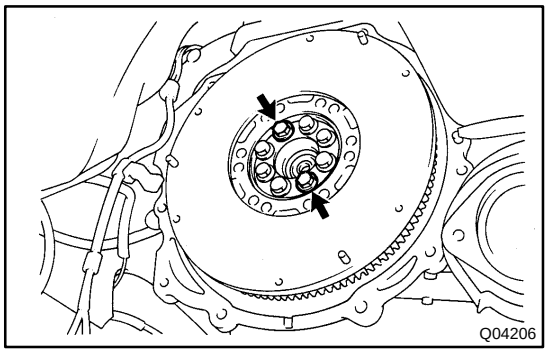

(d) Install 2 new bolts.
(e) First, torque the 2 bolts uniformly a little at a time.
Torque: 49 N·m (500 kgf·cm, 36 ft·lbf)
(f) Then tighten the 2 bolts an additional 80 - 100°.

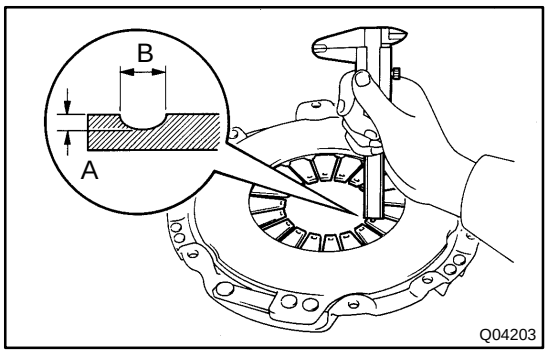

6. INSPECT DIAPHRAGM SPRING FOR WEAR

Using calipers, measure the diaphragm spring for depth and width of wear.

Maximum:
Depth A: 0.6 mm (0.024 in.)
Width B: 5.0 mm (0.197 in.)

If necessary, replace the clutch cover.

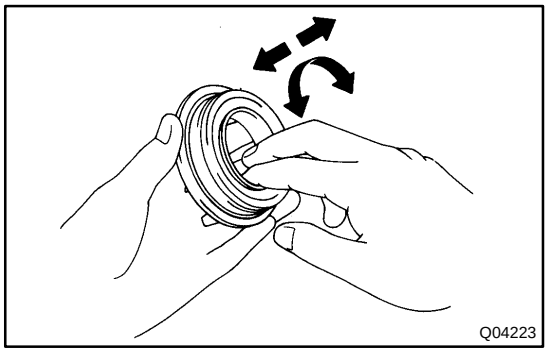

7. INSPECT RELEASE BEARING

Turn the bearing by hand while applying force in the axial direction.

HINT:

The bearing is permanently lubricated and requires no cleaning or lubrication.

If a problem is found, replace the bearing together with the hub.

8. INSPECT FLYWHEEL DAMPER FOR GREASE LEAKAGE

If grease has sprayed onto the clutch housing, replace the flywheel assembly.

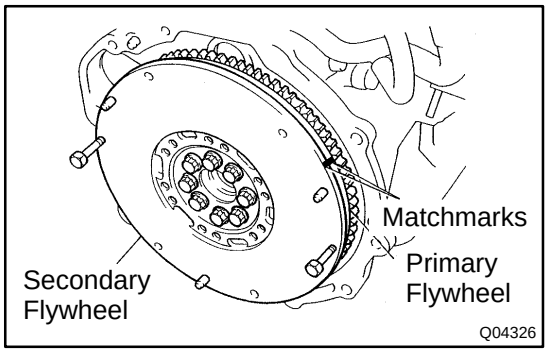

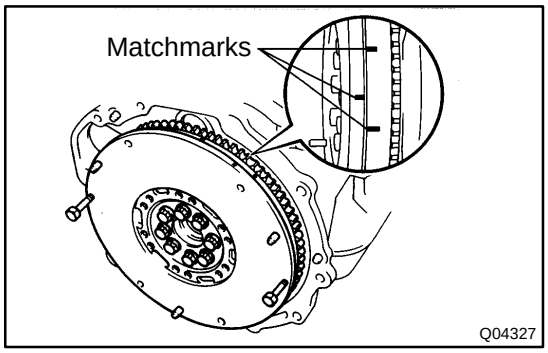

9. INSPECT FLYWHEEL DAMPER ROTATIONAL FREEPLAY

(a) Install the 2 bolts to the secondary flywheel at diametrically opposite positions.

(b) Holding both the bolts, and turn the secondary flywheel clockwise until it stops.

(c) Put matchmarks on the primary and secondary flywheels at this position.

(d) Then rotate the primary flywheel counterclockwise by hand until it stops.

(e) Put matchmarks on the primary flywheel at this position.

(f) Measure the circumferential length between the 2 matchmarks on the secondary flywheel.

Standard: 105 mm (4.134 in.)

(g) Repeat the previous steps (d) to (f) 4 times and if the measurement is greater than the maximum length replace the flywheel assembly (See page EM-88).

CL04D-01

INSTALLATION

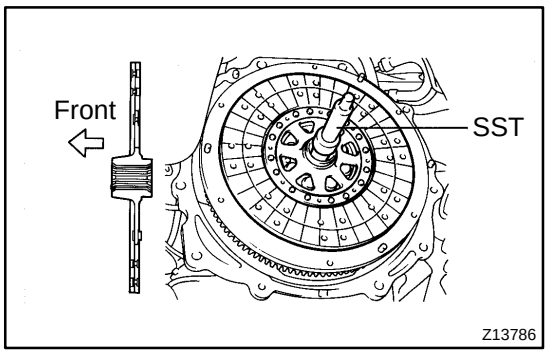

1. INSTALL CLUTCH DISC AND COVER ON FLYWHEEL

(a) Insert SST in the clutch disc, then set them and the cover in position.
SST 09301-001 10

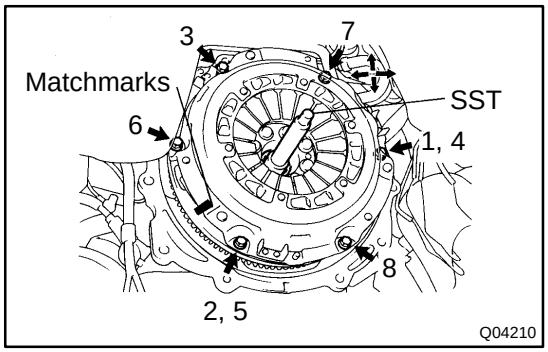

(b) Align the matchmarks on the clutch cover and flywheel.
(c) Tighten the bolts evenly and gradually while pushing the SST. Make several passes around the cover until it is snug.
(d) Torque the bolts on the clutch cover in the order shown.
Torque: 19 N·m (195 kgf·cm, 14 ft·lbf)

HINT:
Temporarily tighten the No.1 and No.2 bolts.

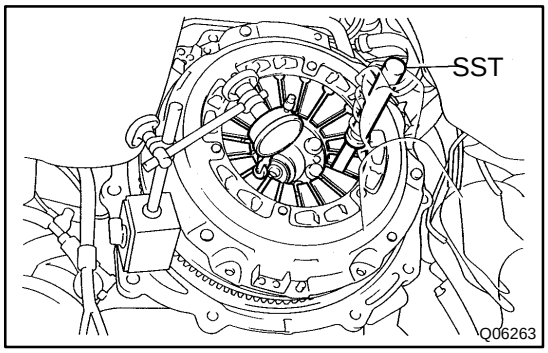

2. CHECK DIAPHRAGM SPRING TIP ALIGNMENT

Using a dial indicator with roller instrument, check the diaphragm spring tip alignment.

Maximum non-alignment: 0.5 mm (0.020 in.)

If the alignment is not as specified, use SST to adjust the diaphragm spring tip alignment.
SST 09333-00013

3. REMOVE CLUTCH COVER AND CLUTCH DISC

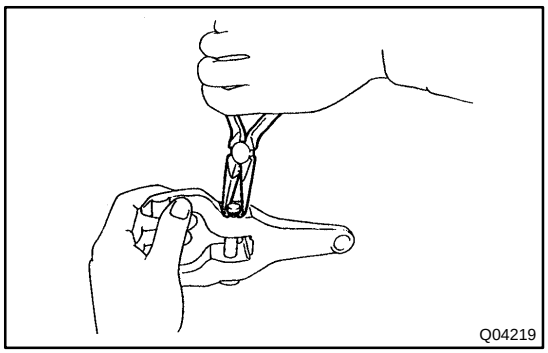

4. INSTALL CLUTCH RELEASE FORK

(a) Install the wave washer and pin to release fork.
(b) Install a new E-ring.

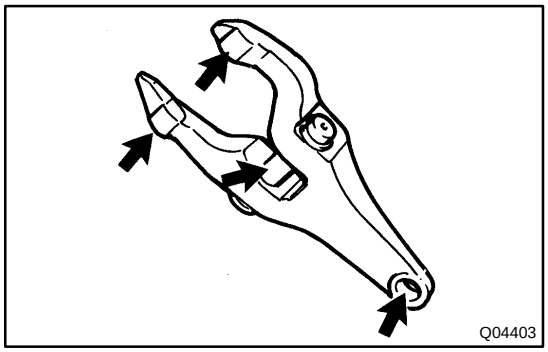

5. APPLY MOLYBDENUM DISULPHIDE LITHIUM BASE GREASE (NLGI NO.2)

(a) Apply release hub grease to these parts:
- ★ Release fork and hub contact point
- ★ Release fork and push rod contact point
- ★ Release fork pivot point

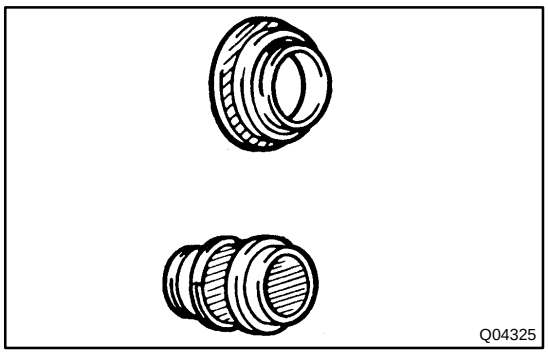

★ Release bearing hub inside groove
★ Release bearing front surface

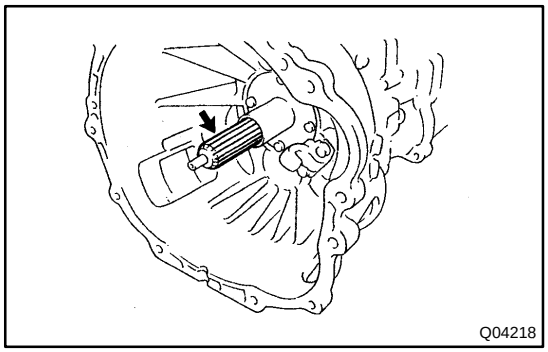

(b) Apply clutch spline grease.
★ Clutch disc spline

HINT:
Recommended grease part number 08887-01706 (100 g).

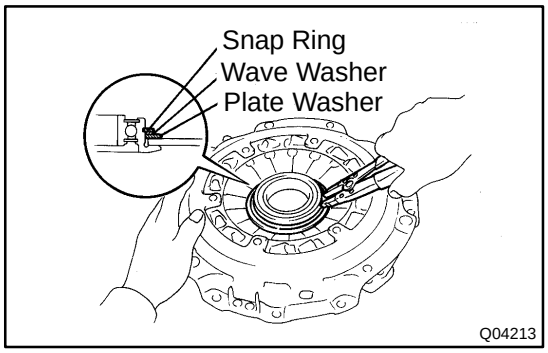

6. INSTALL CLUTCH RELEASE BEARING

(a) Install the release bearing hub, wave washer and plate washer.
(b) Using a snap ring expander, install a new snap ring.

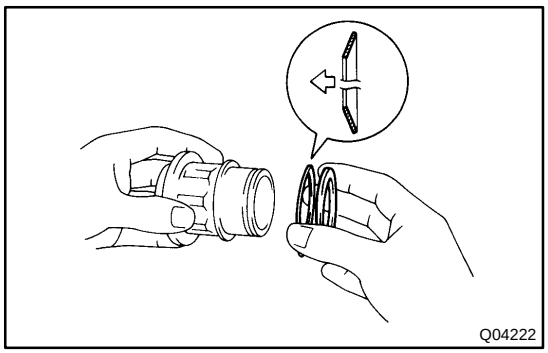

7. INSTALL CLUTCH RELEASE BEARING HUB

(a) Install the thrust cone washer and plate washer to release bearing hub.

NOTICE:
Install the thrust cone washer in the correct direction.

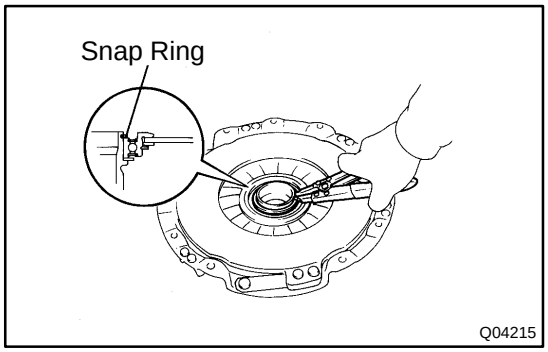

(b) Install the release bearing hub to release bearing.
(c) Using a snap ring expander, install a new snap ring.

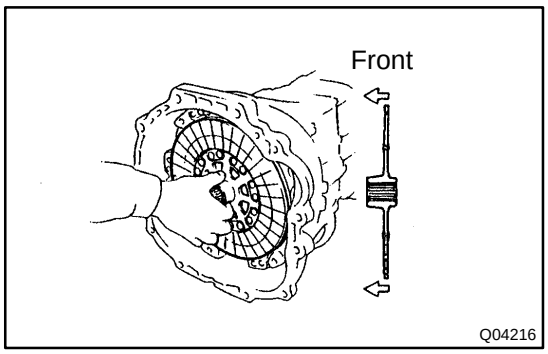

8. INSTALL CLUTCH COVER ASSEMBLY

9. INSTALL CLUTCH DISC

NOTICE:

Install the clutch disc in the correct direction.

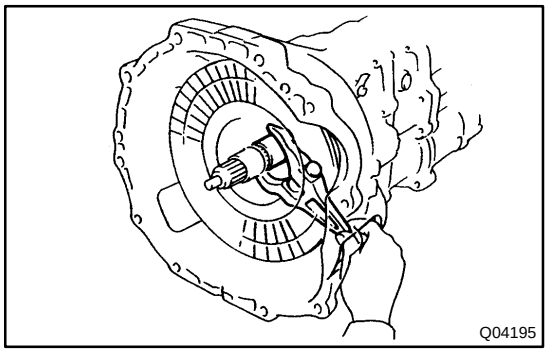

10. INSTALL RELEASE FORK ASSEMBLY

Install the release bearing assembly to the release fork assembly, and install them to the transmission.

11. INSTALL TRANSMISSION TO ENGINE

(See page MT-2)

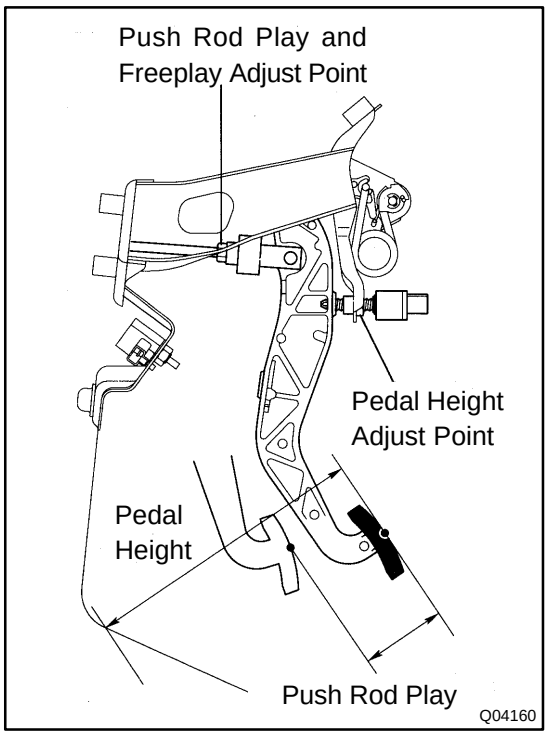

CLUTCH PEDAL

INSPECTION

CL03Z-01

1. CHECK PEDAL HEIGHT

Pedal height from asphalt sheet:
146.2 - 156.2 mm (5.76 - 6.15 in.)

2. IF NECESSARY, ADJUST PEDAL HEIGHT

Loosen the lock nut and clutch switch until the height is correct. Tighten the lock nut.

HINT:

Before rotating the clutch switch for pedal height adjustment, disconnect the clutch switch connector.

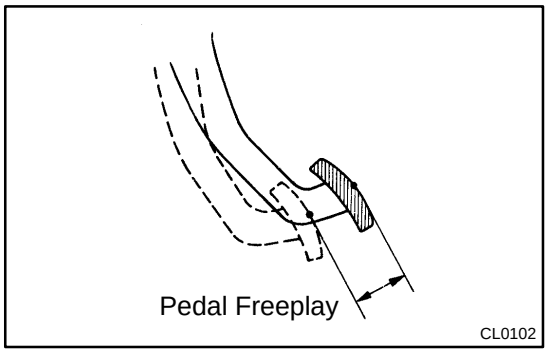

3. CHECK PEDAL FREEPLAY AND PUSH ROD PLAY

Push in on the pedal until the beginning of clutch resistance is felt.

Pedal freeplay: 5.0 - 15.0 mm (0.197 - 0.591 in.)

Gently push on the pedal until the resistance begins to increase a little.

Push rod play at pedal top:
1.0 - 5.0 mm (0.039 - 0.197 in.)

4. IF NECESSARY, ADJUST PEDAL FREEPLAY AND PUSH ROD PLAY

(a) Loosen the lock nut and turn the push rod until the free-play and push rod play are correct.
(b) Tighten the lock nut.
(c) After adjusting the pedal freeplay, check the pedal height.

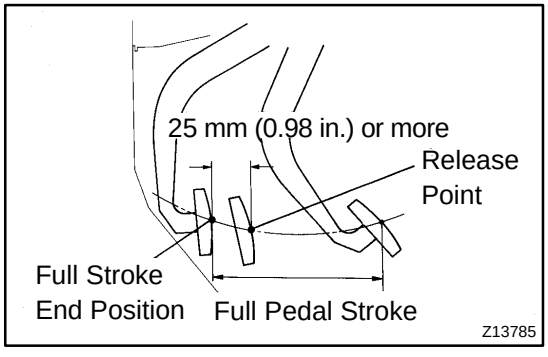

5. INSPECT FULL PEDAL STROKE

Full pedal stroke: 132.0 - 138.0 mm (5.20 - 5.43 in.)

6. INSPECT CLUTCH RELEASE POINT

(a) Pull the parking brake lever and install wheel stopper.
(b) Start the engine and idle the engine.
(c) Without depressing the clutch pedal, slowly shift the shift lever into the reverse position until the gears contact.
(d) Gradually depress the clutch pedal and measure the stroke distance from the point the gear noise stops (release point) up to the full stroke end position.

Standard distance: 25 mm (0.98 in.) or more
(From pedal stroke end position to release point)

If the distance is not as specified, do the following operation.

- ★ Inspect pedal height.
- ★ Inspect push rod play and pedal freeplay.
- ★ Bleed the clutch line.
- ★ Inspect the clutch cover and disc.

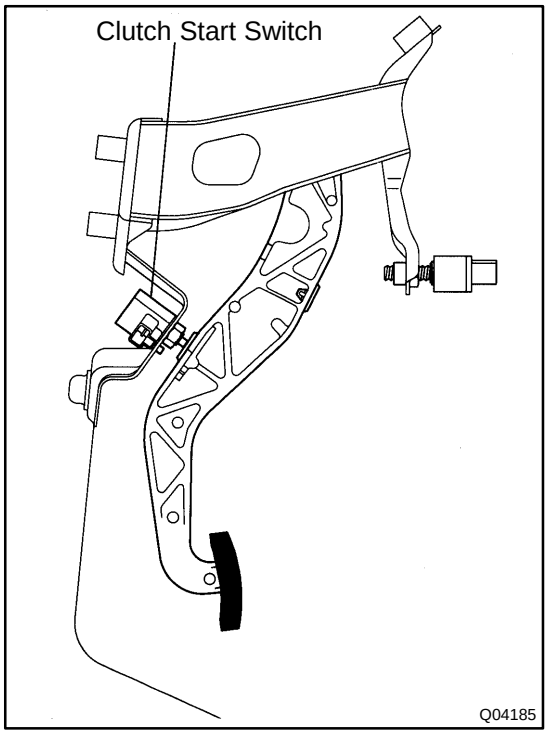

7. CHECK CLUTCH START SYSTEM

(a) Check that the engine does not start when the clutch pedal is released.

(b) Check that the engine starts when the clutch pedal is fully depressed.

If necessary, adjust or replace the clutch start switch.

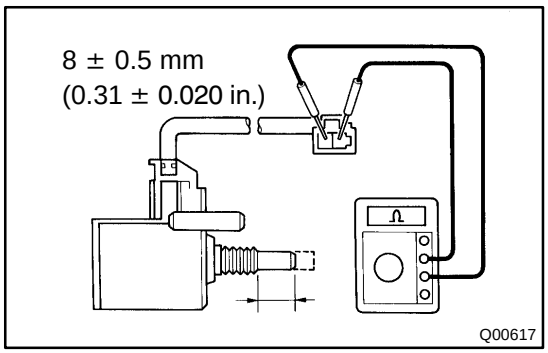

8. INSPECT CONTINUITY OF CLUTCH START SWITCH

(a) Check that there is continuity between the terminals when the switch is ON (pushed).

(b) Check that there is no continuity between the terminals when the switch is OFF (free).

If continuity is not as specified, replace the switch.

CLUTCH MASTER CYLINDER

COMPONENTS

CL040-01

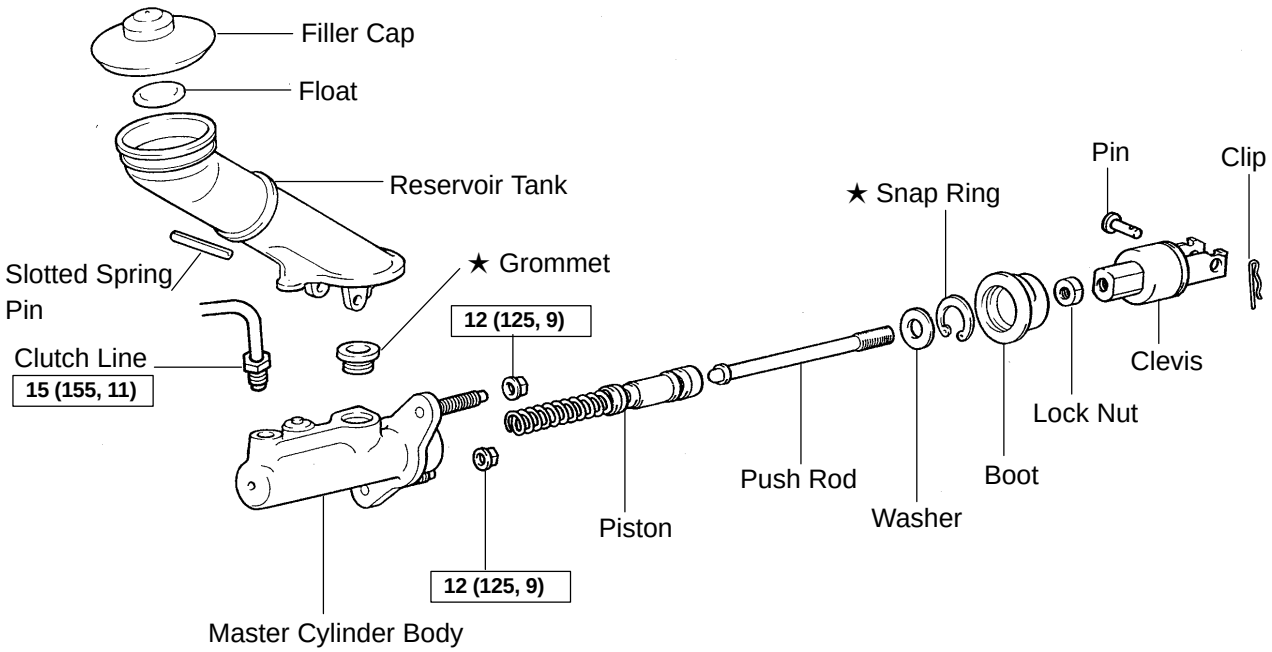

N·m (kgf·cm, ft·lbf) : Specified torque

★ Non-reusable part

Z16903

CL041-01

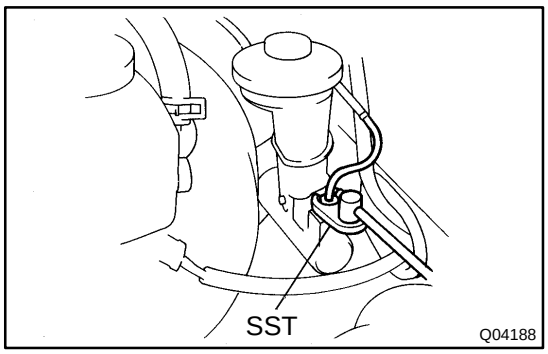

REMOVAL

1. DRAIN OUT FLUID WITH SYRINGE

2. DISCONNECT CLUTCH LINE UNION

Using SST, disconnect the union nut.

SST 09023-00100

Torque: 15 N·m (155 kgf·cm, 11 ft·lbf)

3. REMOVE CLIP AND PIN

4. REMOVE 2 MOUNTING NUTS AND PULL OUT MASTER CYLINDER

Torque: 12 N·m (125 kgf·cm, 9 ft·lbf)

CL042-01

DISASSEMBLY

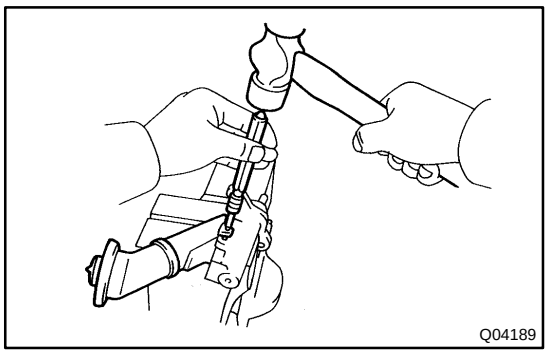

1. REMOVE RESERVOIR TANK

(a) Using a pin punch and hammer, drive out the slotted spring pin.

(b) Remove the reservoir tank and grommet.

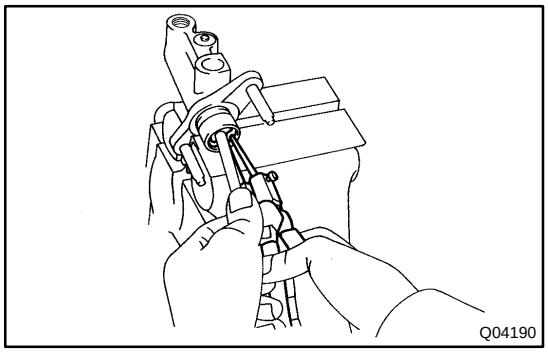

2. REMOVE PUSH ROD

(a) Pull back the boot, and using snap ring pliers, remove the snap ring.

(b) Pull out the push rod.

3. REMOVE PISTON

CL044-01

REASSEMBLY

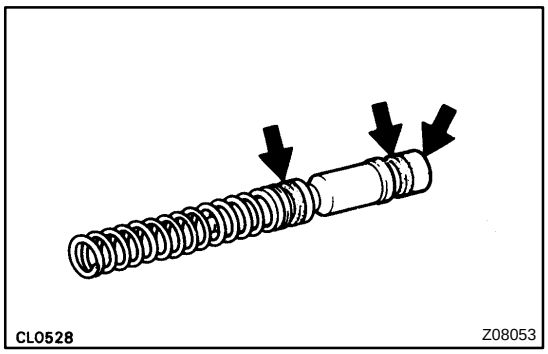

1. COAT PARTS WITH LITHIUM SOAP BASE GLYCOL GREASE, AS SHOWN

2. INSERT PISTON INTO CYLINDER

3. INSTALL PUSH ROD ASSEMBLY WITH NEW SNAP RING

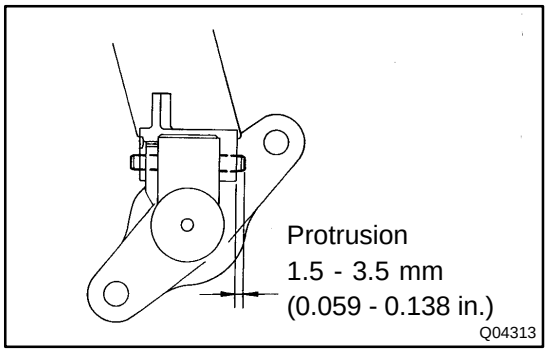

4. INSTALL RESERVOIR TANK

(a) Install the reservoir tank and a new grommet.

(b) Using a pin punch and hammer, drive in the slotted spring pin.

TROUBLESHOOTING

MT06M-02

PROBLEM SYMPTOMS TABLE

Use the table below to help you find the cause of the problem. The numbers indicate the priority of the likely cause of the problem. Check each part in order. If necessary, replace these parts.

Symptom	Suspect Area	See page
Noise	1. Flywheel damper	CL-17 CL-22
	2. Oil (Level low)	MT-3
	3. Oil (Wrong)	MT-3
	4. Gear (Worn or damaged)	-
	5. Bearing (Worn or damaged)	-
Oil leakage	1. Oil (Level too high)	MT-3
	2. Gasket (Damaged)	-
	3. Oil seal (Worn or damaged)	MT-7
	4. O-Ring (Worn or damaged)	MT-2 MT-7
Hard to shift or will not shift	1. Synchronizer ring (Worn or damaged)	-
	2. Shift key spring (Damaged)	-
Jumps out of gear	1. Locking ball spring (Damaged)	-
	2. Shift fork (Worn)	-
	3. Gear (Worn or damaged)	-
	4. Bearing (Worn or damaged)	-

MANUAL TRANSMISSION UNIT

MT06N-01

COMPONENTS

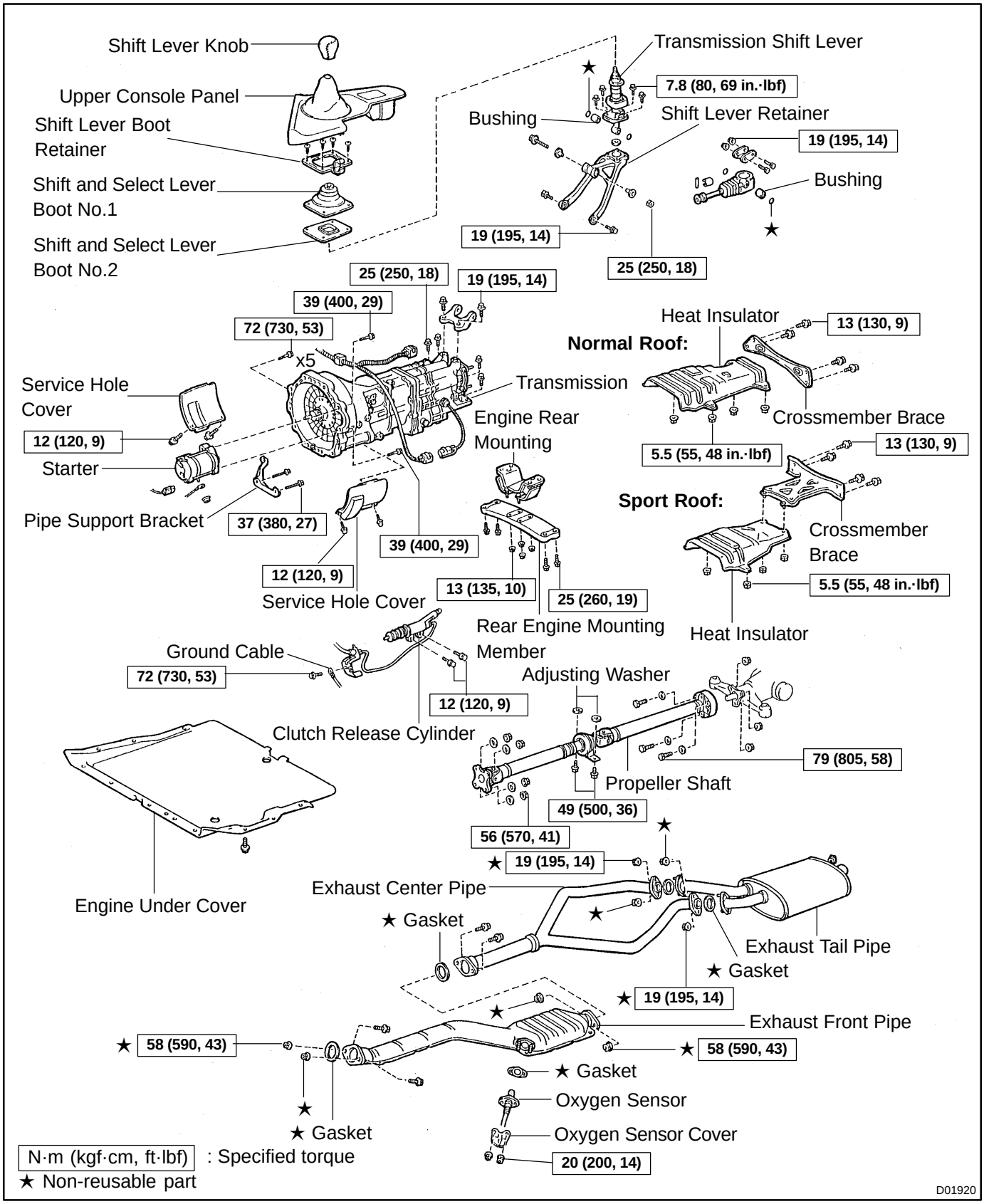

MT06O-01

REMOVAL

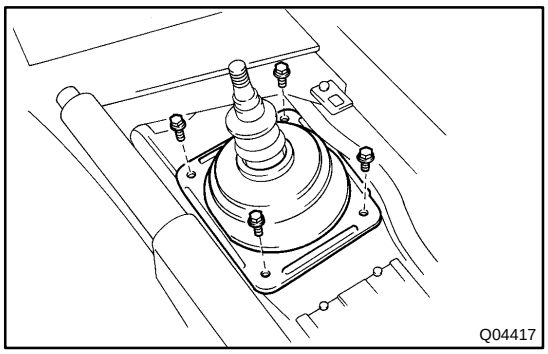

1. REMOVE UPPER CONSOLE PANEL, SHIFT LEVER BOOT RETAINER AND SHIFT AND SELECT LEVER BOOTS NO.1 AND NO.2

(a) Remove the shift lever knob.
(b) Using a screwdriver, pry out the upper console panel.
(c) Remove the 4 bolts and boot retainer.
(d) Remove the shift and select lever boots No.1 and No.2.

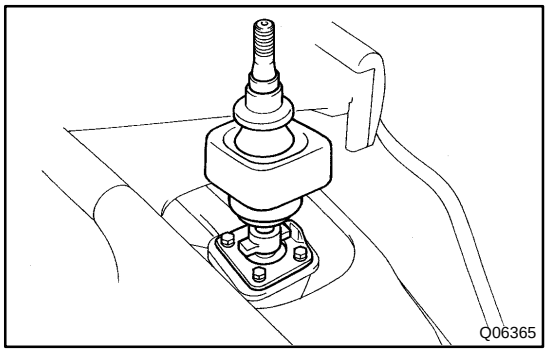

2. REMOVE 4 TRANSMISSION SHIFT LEVER SET BOLTS
Torque: 7.8 N·m (80 kgf·cm, 69 in.·lbf)

3. RAISE VEHICLE

NOTICE:
Make sure that the vehicle is securely supported.

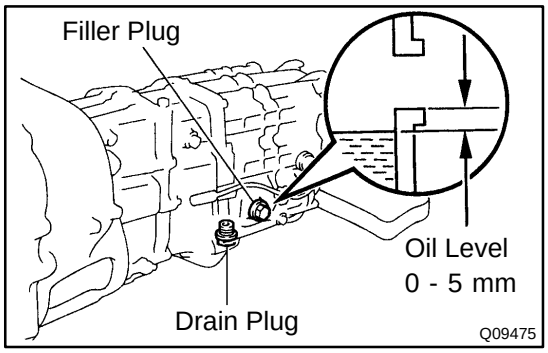

4. DRAIN TRANSMISSION OIL
Oil type: TOYOTA GEAR OIL V160 or ESSO ATF DEXRON®D-21065
Capacity: 1.8 liters (1.9 US qts, 1.6 Imp. qts)
Torque: 39 N·m (400 kgf·cm, 29 ft·lbf)

5. REMOVE ENGINE UNDER COVER

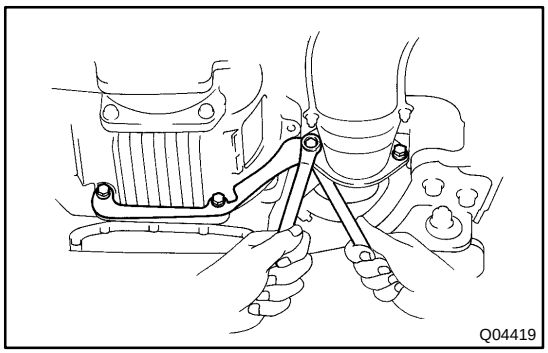

6. REMOVE EXHAUST FRONT PIPE AND PIPE SUPPORT BRACKET

(a) Remove the 2 nuts, cover, oxygen sensor and gasket.
Torque: 20 N·m (200 kgf·cm, 14 ft·lbf)
(b) Remove the 2 bolts, nuts and gasket.
Torque: 58 N·m (590 kgf·cm, 43 ft·lbf)
(c) Remove the 2 bolts and pipe support bracket from the clutch housing.
Torque: 37 N·m (380 kgf·cm, 27 ft·lbf)

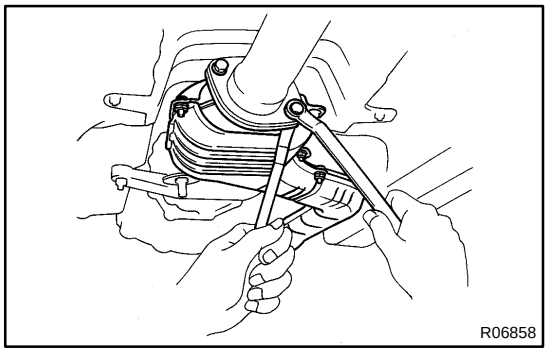

(d) Remove the 2 bolts, nuts and gasket.
Torque: 58 N·m (590 kgf·cm, 43 ft·lbf)
(e) Remove the exhaust front pipe.

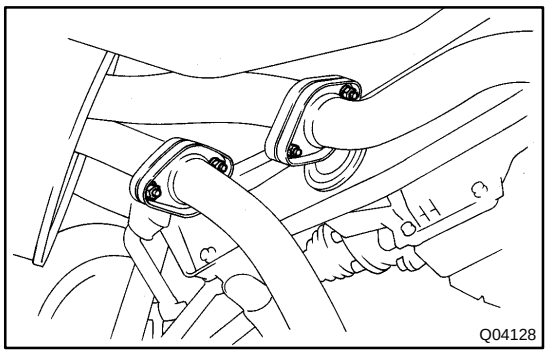

7. REMOVE EXHAUST CENTER PIPE

(a) Remove the 4 nuts and 2 gaskets.
Torque: 19 N·m (195 kgf·cm, 14 ft·lbf)

(b) Disconnect the exhaust center pipe from the 2 rings.

(c) Remove the exhaust center pipe.

8. REMOVE HEAT INSULATOR

Remove the 4 nuts and heat insulator.
Torque: 5.4 N·m (55 kgf·cm, 48 in.·lbf)

9. REMOVE CROSSMEMBER BRACE

Remove the 4 bolts (Normal Roof) or 6 bolts (Sport Roof) and crossmember brace.
Torque: 13 N·m (130 kgf·cm, 9 ft·lbf)

10. REMOVE PROPELLER SHAFT
(See page PR-2)

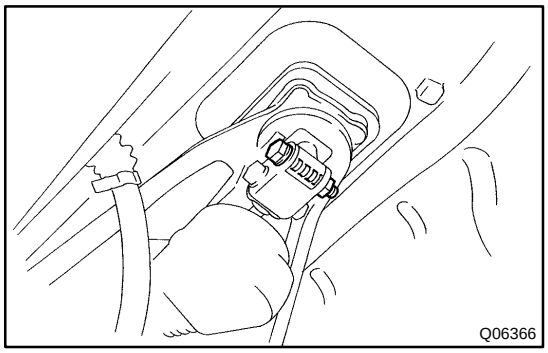

11. REMOVE TRANSMISSION SHIFT LEVER

(a) Remove the bolt and nut.

(b) Remove the transmission shift lever, inside the vehicle.
Torque: 19 N·m (195 kgf·cm, 14 ft·lbf)

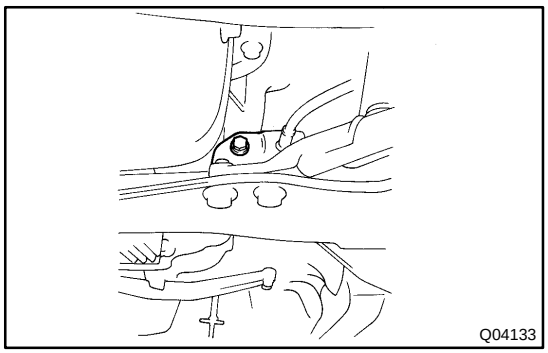

12. REMOVE CLUTCH RELEASE CYLINDER AND GROUND CABLE

(a) Remove the bolt, clamp and ground cable.
Torque: 72 N·m (730 kgf·cm, 53 ft·lbf)

(b) Remove the 2 bolts and clutch release cylinder.
Torque: 12 N·m (120 kgf·cm, 9 ft·lbf)

13. DISCONNECT STARTER WIRE

(a) Remove the nut and disconnect the starter wire.

(b) Disconnect the starter wire connector.

14. DISCONNECT VEHICLE SPEED SENSOR AND BACK-UP LIGHT SWITCH CONNECTORS

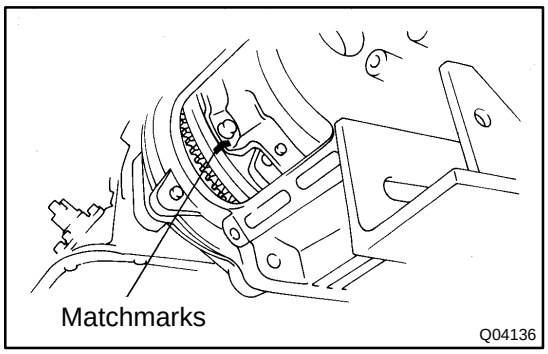

15. REMOVE CLUTCH COVER SET BOLT

(a) Remove the 2 bolts and service hole cover.
Torque: 12 N·m (120 kgf·cm, 9 ft·lbf)

(b) Place matchmarks on the flywheel and clutch cover.

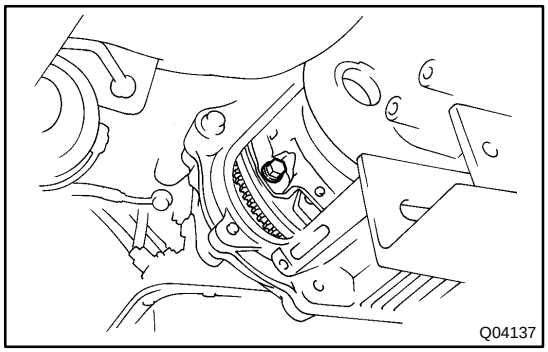

(c) Remove the 6 bolts.
Torque: 19 N·m (195 kgf·cm, 14 ft·lbf)

16. JACK UP TRANSMISSION SLIGHTLY

Using a transmission jack, support the transmission.

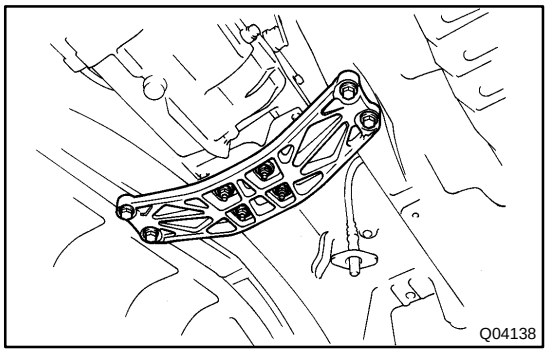

17. REMOVE REAR ENGINE MOUNTING MEMBER

Remove the 4 nuts, bolts and rear engine mounting member.
Torque:
Nut: 13 N·m (135 kgf·cm, 10 ft·lbf)
Bolt: 25 N·m (260 kgf·cm, 19 ft·lbf)

18. REMOVE STARTER

Lower the engine rear side and remove the 2 bolts and starter.
Torque: 39 N·m (400 kgf·cm, 29 ft·lbf)

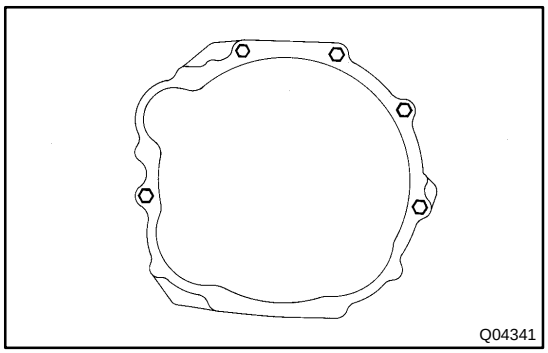

19. REMOVE TRANSMISSION

Remove the 5 transmission mounting bolts and transmission from the engine.
Torque: 72 N·m (730 kgf·cm, 53 ft·lbf)

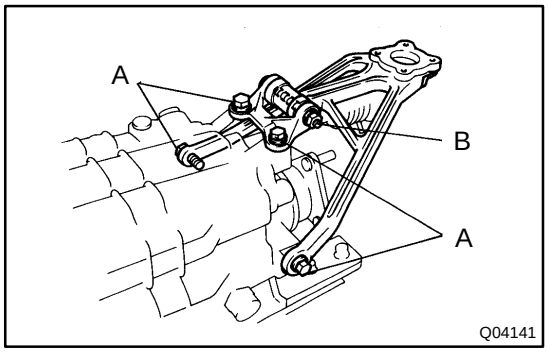

20. REMOVE SHIFT LEVER RETAINER

Remove the 5 bolts, nut and shift lever retainer from the transmission.
Torque:
Bolt A: 19 N·m (195 kgf·cm, 14 ft·lbf)
Nut B: 25 N·m (250 kgf·cm, 18 ft·lbf)

21. REMOVE ENGINE REAR MOUNTING

Remove the 4 bolts and engine rear mounting from the transmission.
Torque: 25 N·m (250 kgf·cm, 18 ft·lbf)

OIL SEAL

COMPONENTS

MT06Q-01

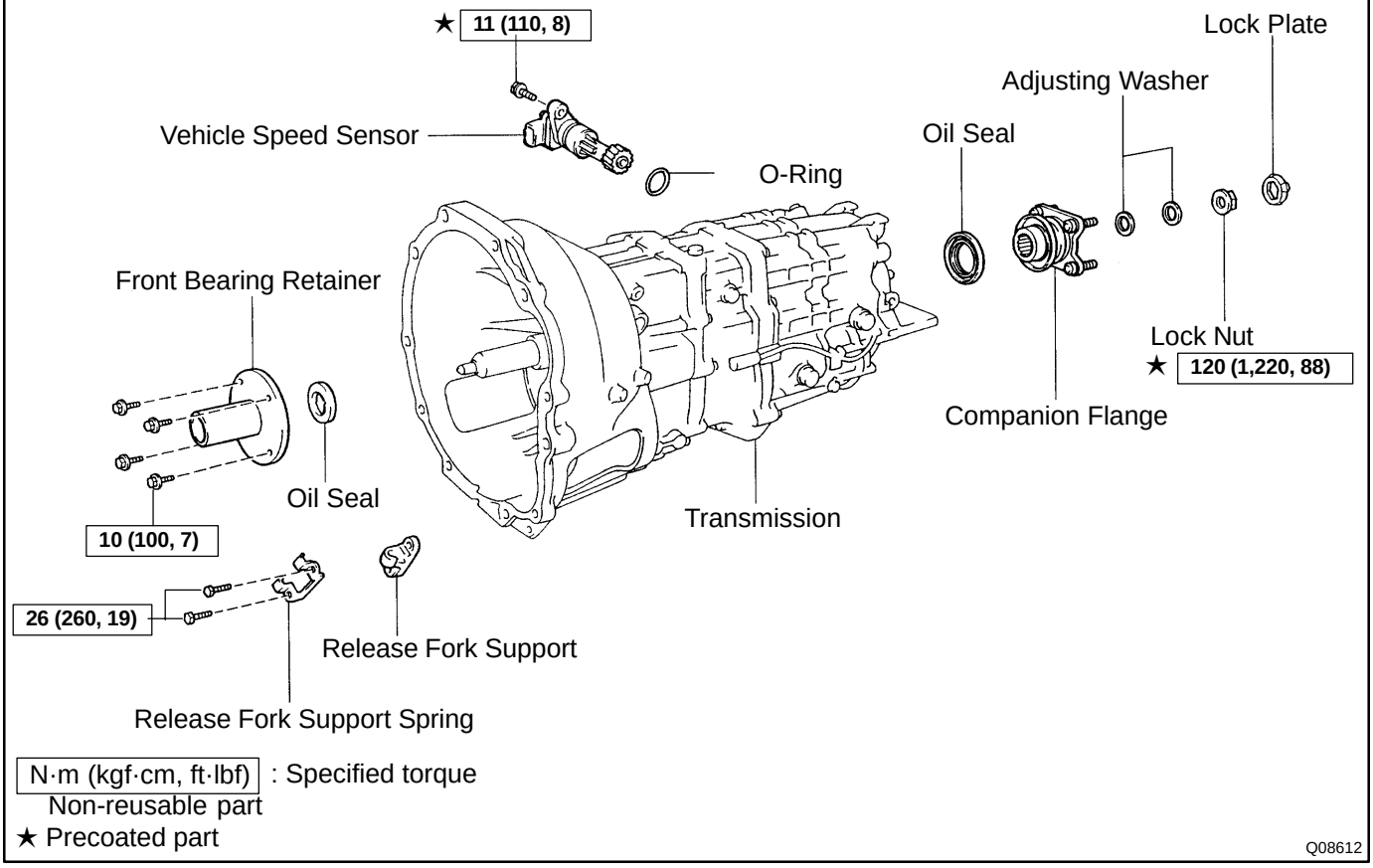

MT06R-02

REPLACEMENT

1. REPLACE TRANSMISSION REAR OIL SEAL

(a) Remove the propeller shaft.
(See page PR-2)

(b) Using a screwdriver, remove the lock plate.

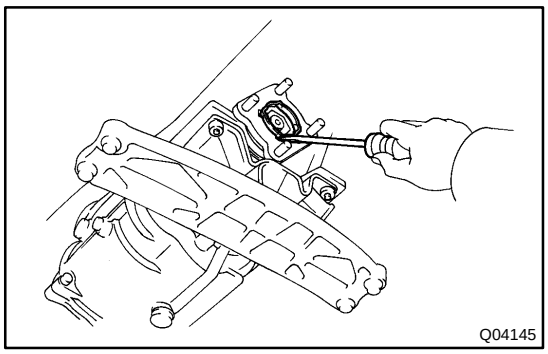
Q04145

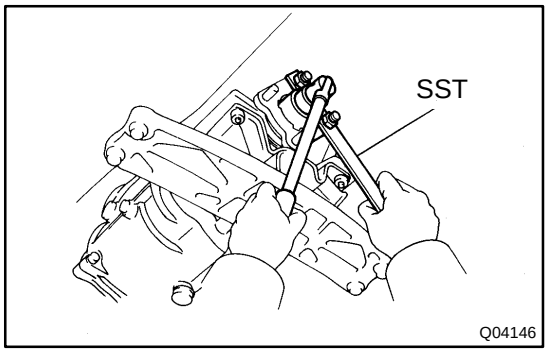

Q04146

(c) Using SST to hold the flange, remove the lock nut.
SST 09330-00021

(d) Remove the 2 adjusting washers.

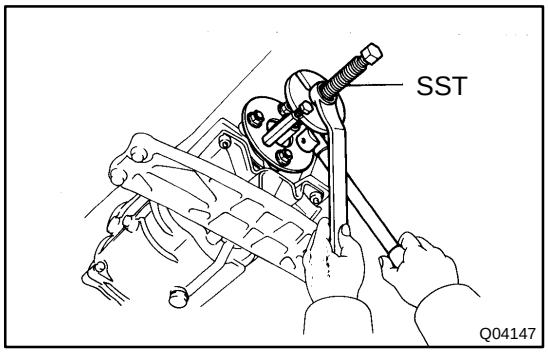

Q04147

(e) Using SST, remove the companion flange.
SST 09950- 30010 (09951- 03010, 09953- 03010, 09954-03010, 09955-03030, 09956-03030)

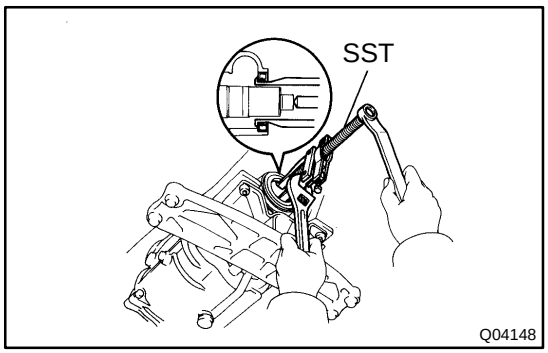

Q04148

(f) Using SST, remove the oil seal.
SST 09308-10010

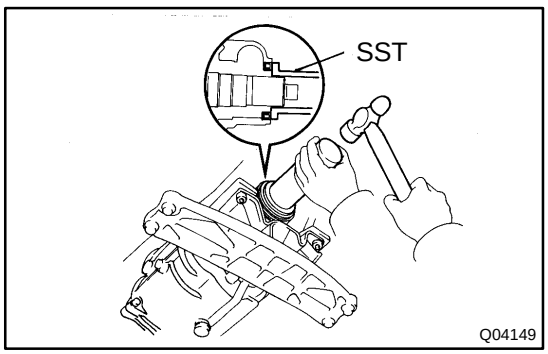

Q04149

(g) Using SST and a hammer, install a new oil seal.
SST 09308-14010, 09309-14040

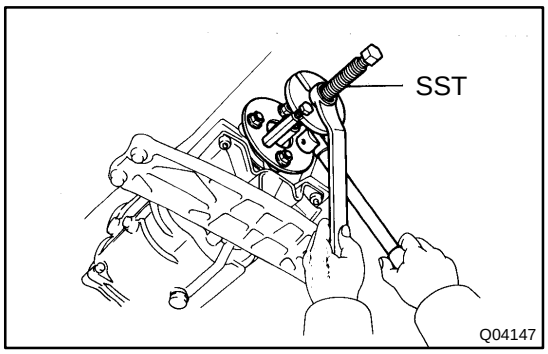

(h) Heat the companion flange in an oven.
Companion flange temperature:
80 - 90˚C (176 - 194˚F)

(i) Apply gear oil to the output shaft and install the companion flange.

(j) Using SST, install the companion flange to the output shaft.
SST 09950- 30010 (09951- 03010, 09953- 03010, 09954-03010, 09955-03030, 09956-03030)

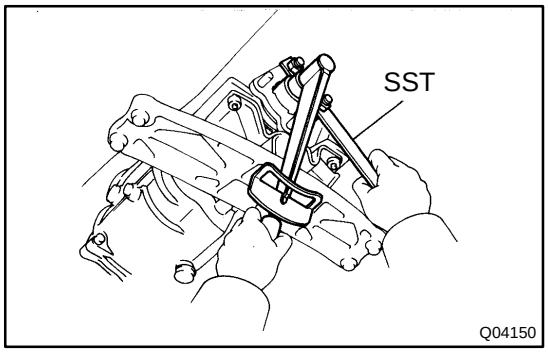

(k) Using SST to hold the flange, temporary install and torque the lock nut.
SST 09330-00021
Torque: 190 N·m (1,940 kgf·cm, 140 ft·lbf)

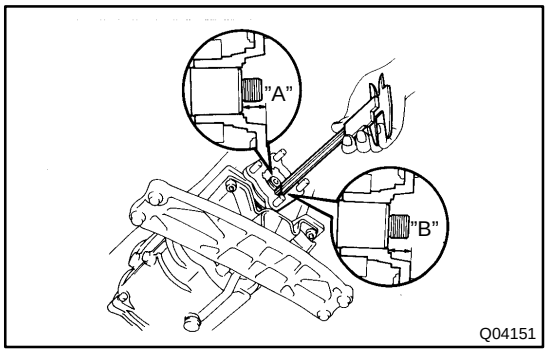

(l) Remove the lock nut.

(m) Using a caliper gauge, measure dimension "A" and dimension "B".

(n) Calculate the required thickness of the adjusting shim.
Thickness:
(Dimension "A" - Dimension "B") - (0.05 ~ 0.14 mm, 0.0020 ~ 0.0055 in.)

Adjusting shim thickness mm (in.)	Adjusting shim thickness mm (in.)
1.15 - 1.20 (0.0453 - 0.0472)	1.65 - 1.70 (0.0650 - 0.0669)
1.25 - 1.30 (0.0492 - 0.0512)	1.85 - 1.90 (0.0729 - 0.0748)
1.45 - 1.50 (0.0571 - 0.0591)	1.95 - 2.00 (0.0768 - 0.0787)

(o) Install the selected shims to the output shaft.

(p) Apply sealant to the nut threads.
Sealant:
Part No. 08833-00080, THREE BOND 1344, LOCTITE 242 or equivalent

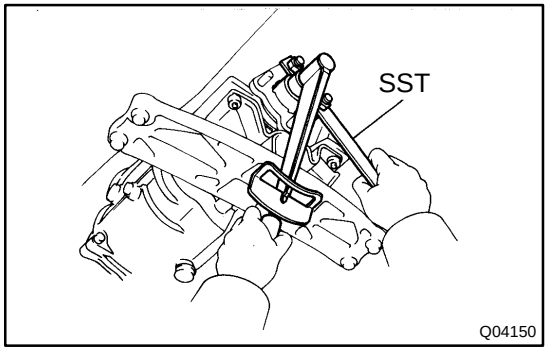

(q) Using SST to hold the flange, reinstall and torque the lock nut.
SST 09330-00021
Torque: 120 N·m (1,220 kgf·cm, 88 ft·lbf)

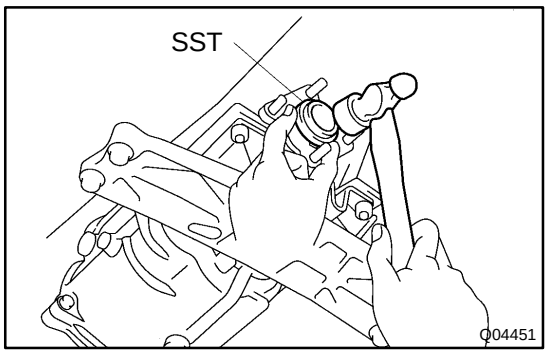

(r) Using SST and a hammer, install a new lock plate.
SST 09309-14010

HINT:
If necessary, using a pin punch and hammer, and tap the lock plate.

(s) Install the propeller shaft.
(See page PR-2)

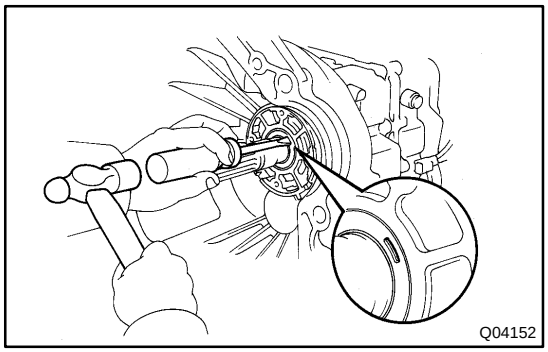

2. REPLACE TRANSMISSION FRONT OIL SEAL

(a) Remove the transmission.
(See page MT-2)
(b) Remove the 2 bolts and release fork support.
(c) Remove the 4 bolts and front bearing retainer.
(d) Using a hammer, tap in the screwdriver to the oil seal.

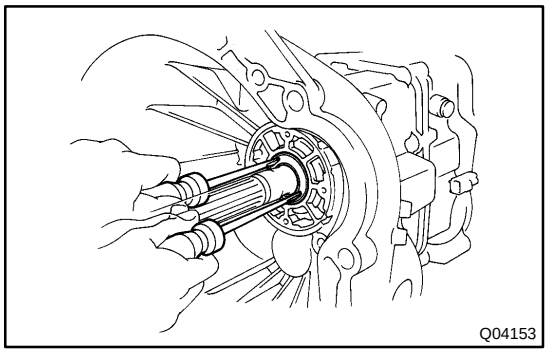

(e) Pry out the oil seal.

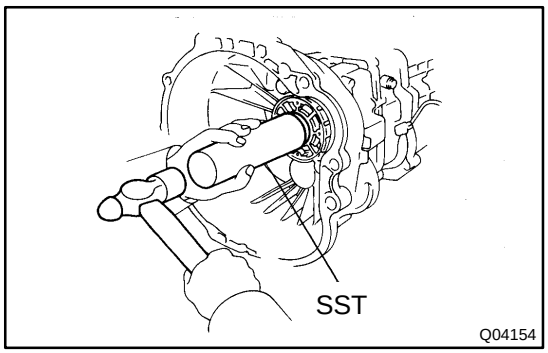

(f) Using SST and a hammer, install a new oil seal.
SST 09308-14010, 09309-14040
(g) Install the transmission.
(See page MT-2)
(h) Install the front bearing retainer with the 4 bolts.
Torque: 10 N·m (100 kgf·cm, 7 ft·lbf)
(i) Install the release fork support with the 2 bolts.
Torque: 26 N·m (260 kgf·cm, 19 ft·lbf)

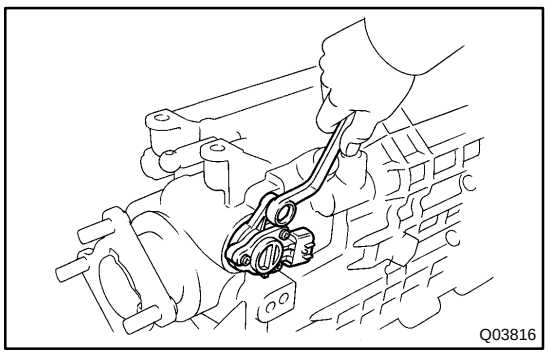

3. REPLACE VEHICLE SPEED SENSOR O-RING

(a) Remove the transmission.
(See page MT-2)
(b) Remove the set bolt and driven gear.
(c) Remove the O-ring from the driven gear.
(d) Install a new O-ring to the driven gear.
(e) Apply sealant to the bolt threads.
Sealant:
Part No. 08833-00080, THREE BOND 1344, LOCTITE 242 or equivalent

(f) Install the driven gear with the bolt.
Torque: 11 N·m (110 kgf·cm, 8 ft·lbf)

TROUBLESHOOTING

PR02H-01

PROBLEM SYMPTOMS TABLE

Use the table below to help you find the cause of the problem. The numbers indicate the priority of the likely cause of the problem. Check each part in order. If necessary, replace these parts.

Symptom	Suspect Area	See page
Noise	1. Center support bearing (Worn)	PR-7
	2. Sleeve yoke spline (Worn)	-
	3. Spider bearing (Worn or stuck)	PR-7
Vibration	1. Transmission extension housing rear bushing (Runout)	-
	2. Sleeve yoke spline (Stuck)	-
	3. Propeller shaft (Runout)	PR-7
	4. Propeller shaft (Imbalance)	-

PR06W-01

INSTALLATION

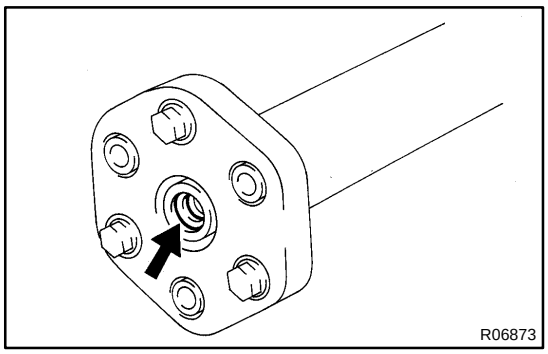

1. 2JZ-GE:

INSTALL PROPELLER SHAFT

(a) Apply grease to the flexible coupling centering bushings.

Grease:

Molybdenum disulfide lithium base, NLGI No.2.

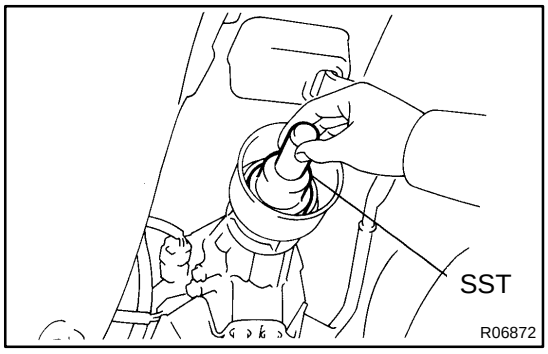

(b) Remove the SST.

(c) Install the propeller shaft to the transmission.

(d) Insert the propeller shaft from the vehicle's rear and connect the transmission and differential.

NOTICE:

Support the center support bearing by hand so that the transmission and intermediate shaft, and propeller shaft and differential, remain in a straight line.

(e) Temporarily install the 2 center support bearing set bolts with the adjusting washers.

HINT:

Use the adjusting washers which were removed.

(f) Align the matchmarks and install the propeller shaft on the differential with the 3 bolts, washers and nuts.

NOTICE:

Bolts should be inserted from the propeller shaft side.

Torque: 79 N·m (805 kgf·cm, 58 ft·lbf)

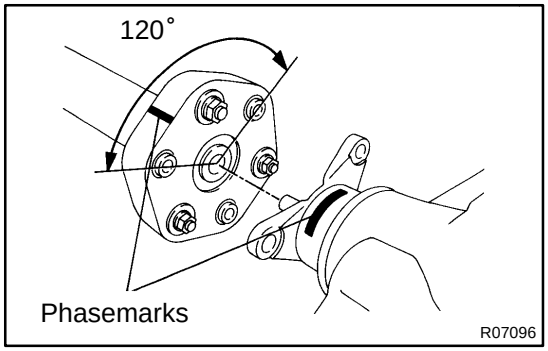

(g) If using a new propeller shaft.

(1) w/ Phasemarks:

Install the propeller shaft phasemarks and differential phasemarks so the their respective alignment phasemarks match.

If the propeller shaft phasemarks and differential phasemarks do not align, install the propeller shaft and differential alignment phasemarks as close together as possible.

(2) w/o Phasemarks:

Install the propeller shaft.

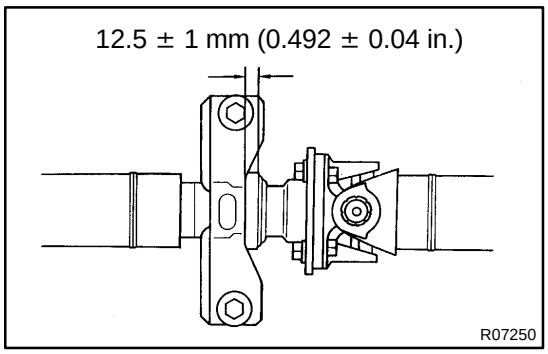

(h) Torque the 2 center support bearing set bolts.
Torque: 49 N·m (500 kgf·cm, 36 ft·lbf)

HINT:
Adjust the center support bearing to keep the dimension, as shown with the vehicle in the unladen condition.
Under the same condition, check if the center line of the center support bearing is at right angles to the shaft axial direction.

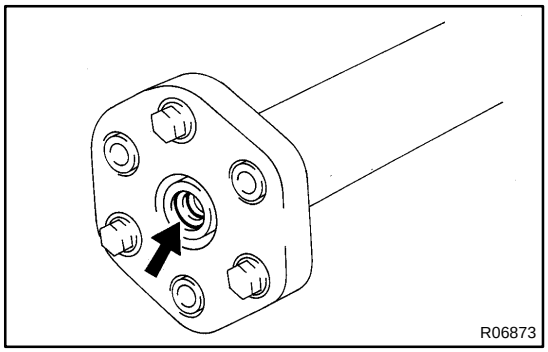

2. 2JZ-GTE:
INSTALL PROPELLER SHAFT

(a) Apply grease to the flexible coupling centering bushings.
Grease:
Molybdenum disulfide lithium base, NLGI No.1 or No.2.

(b) Align the matchmarks on the flanges and connect the flanges with the 4 nuts and washers.

(c) Torque the 4 nuts.
Torque: 56 N·m (570 kgf·cm, 41 ft·lbf)

(d) Insert the propeller shaft from the vehicle's rear and connect the transmission and differential.

NOTICE:
Support the center support bearing by hand so that the transmission and intermediate shaft, and propeller shaft and differential, remain in a straight line.

(e) Temporarily install the 2 center support bearing set bolts with the adjusting washers.

HINT:
Use the adjusting washers which were removed.

(f) Align the matchmarks and install the propeller shaft on the differential with the 3 bolts, washers and nuts.

NOTICE:
Bolts should be inserted from the propeller shaft side.
Torque: 79 N·m (805 kgf·cm, 58 ft·lbf)

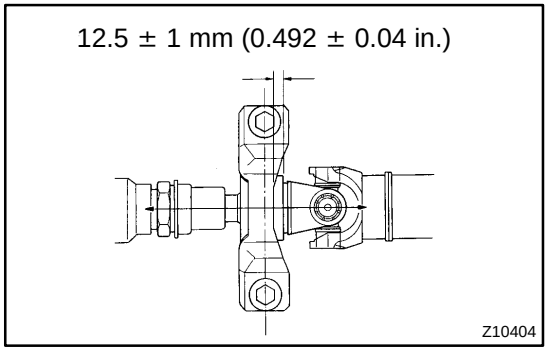

(g) Torque the 2 center support bearing set bolts.
Torque: 49 N·m (500 kgf·cm, 36 ft·lbf)

HINT:
Adjust the center support bearing to keep the dimension, as shown with the vehicle in the unladen condition.
Under the same condition, check if the center line of the center support bearing is at right angles to the shaft axial direction.

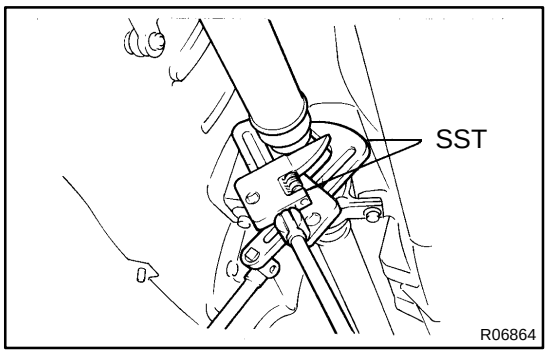

(h) Using SST, torque the adjust nut.
SST 09922-10010
Torque: 50 N·m (515 kgf·cm, 37 ft·lbf)

HINT:
Use torque wrench with a fulcrum length of 34.5 cm (13.6 in.).

3. ADJUST PROPELLER SHAFT JOINT ANGEL (See page PR-14)

NOTICE:
The joint angle should be checked when the propeller shaft is removed and installed.

4. NORMAL ROOF:
INSTALL CENTER FLOOR CROSSMEMBER BRACE

Install the center floor crossmember brace and 4 bolts.
Torque: 13 N·m (130 kgf·cm, 9 ft·lbf)

5. SPORT ROOF:
INSTALL CENTER FLOOR CROSSMEMBER BRACE

Install the center floor crossmember brace and 6 bolts.
Torque: 13 N·m (130 kgf·cm, 9 ft·lbf)

6. INSTALL HEAT INSULATOR

Install the heat insulator and torque the 4 nuts.
Torque: 5.4 N·m (55 kgf·cm, 48 in.·lbf)

7. INSTALL EXHAUST PIPE (See page EM-94)

8. INSTALL OXYGEN SENSOR

Install the oxygen sensor with heat insulator and torque the 2 nuts.
Torque: 44 N·m (450 kgf·cm, 34 in.·lbf)

JOINT ANGLE

PR02N-02

ADJUSTMENT

NOTICE:

When doing operations which involve the removal and installation of the propeller shaft, always check the joint. Make adjustments if necessary.

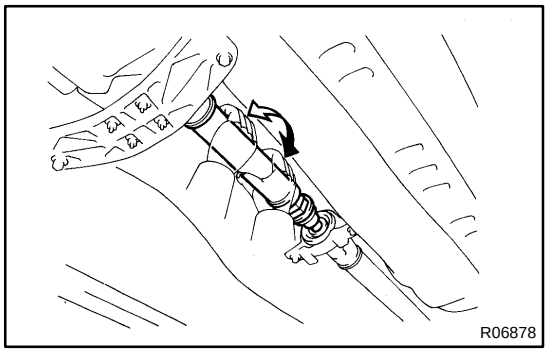

1. STABILIZE PROPELLER SHAFT AND DIFFERENTIAL

(a) Turn the propeller shaft several times by hand to stabilize the center support bearing and flexible couplings.

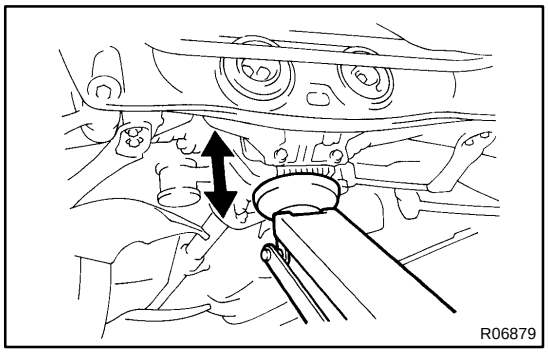

(b) Using a jack, raise and lower the differential to stabilize the differential mounting cushion.

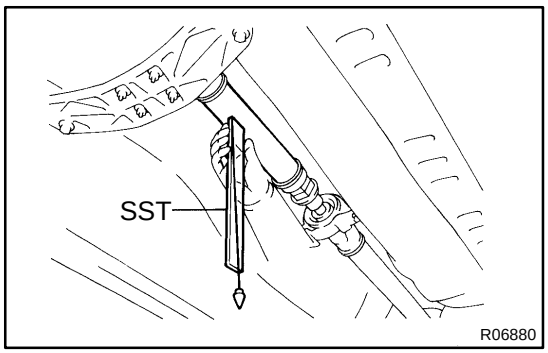

2. CHECK JOINT ANGLE OF NO.2 JOINT AND NO.3 JOINT

(a) Using SST, measure the installation angle of the intermediate shaft and propeller shaft.

SST 09370-50010

HINT:

The SST should be directly underneath the tube.

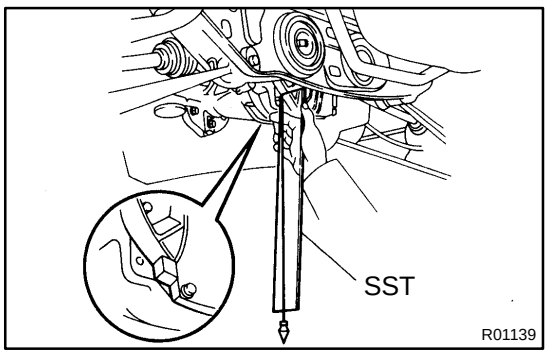

(b) Using the SST, measure the installation angle of the differential.

HINT:

Measure the installation angle by placing the SST in the position, as shown in the illustration.

(c) Calculate the No.2 joint angle.
No.2 joint angle:
A - B = -1˚09' ± 36'
A: Intermediate shaft installation angle
B: Propeller shaft installation angle

(d) Calculate the No.3 joint angle.
No.3 joint angle:
B - C = 44' ± 36'
B: Propeller shaft installation angle
C: Differential installation angle

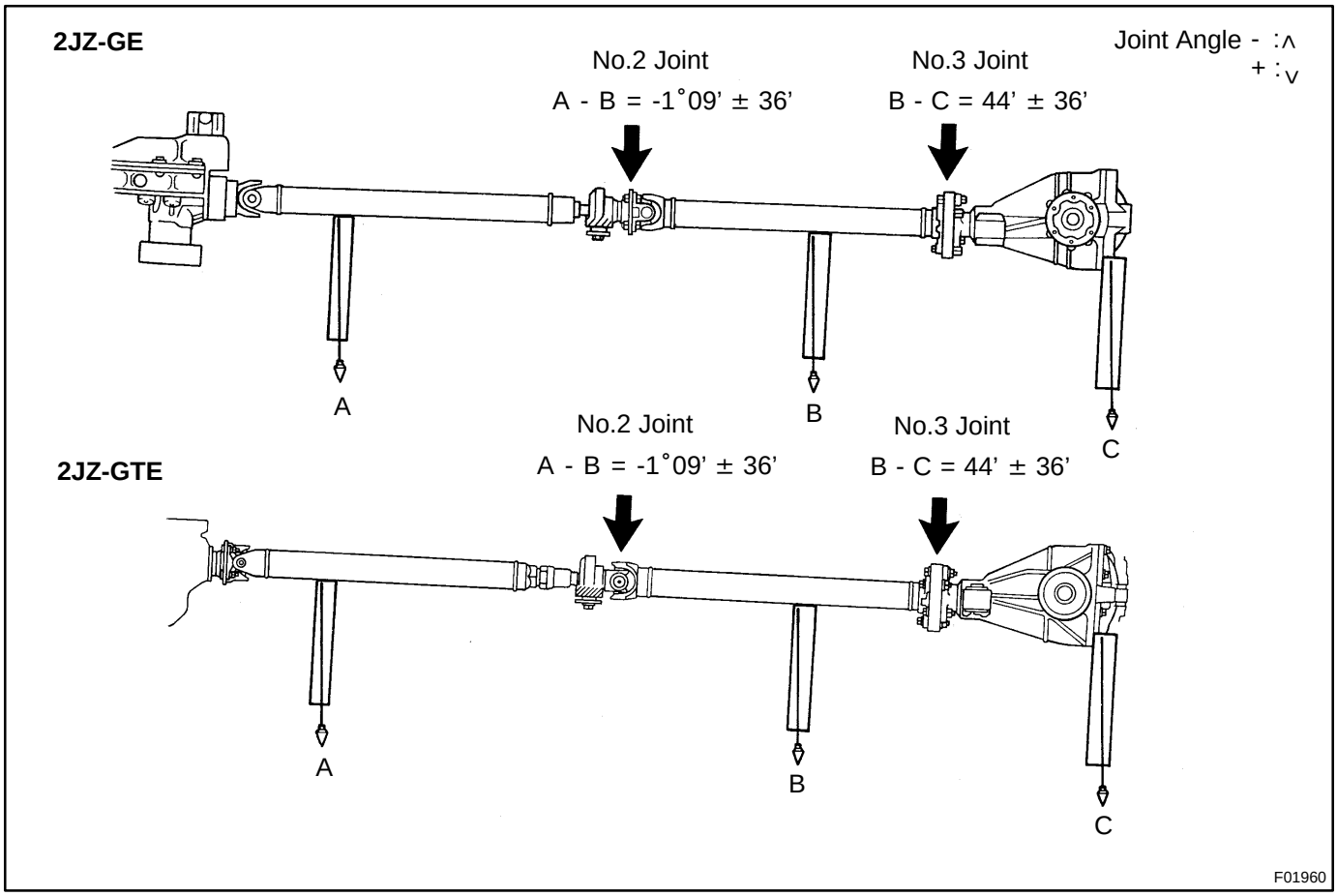

If the measured angle is not within the specification, adjust it with the center support bearing adjusting washer and differential adjusting shim.

Center support bearing adjusting washer thickness

Thickness mm (in.)	Thickness mm (in.)
2.0 (0.079)	6.0 (0.236)
4.0 (0.157)	8.5 (0.335)

NOTICE:
- ★ **Left and right washers should be the same thickness.**
- ★ **2 washers should not be assembled together.**
- ★ **Some vehicles are not assembled with washers.**

Differential adjusting shim thickness

Thickness mm (in.)	Thickness mm (in.)
1.0 (0.039)	2.0 (0.079)
1.6 (0.063)	-

NOTICE:

- ★ **Left and right washers should be the same thickness.**
- ★ **This shim is installed on top of the upper mount stopper and it used for adjustment.**

3. HOW TO READ THIS CHART

Take measurements, then calculate the No.2 and No.3 joint angle.

Make the calculated values on the chart and read the coordinates.

Replace the adjusting washer and shim in accordance with the coordinates read and adjust the joint angles.

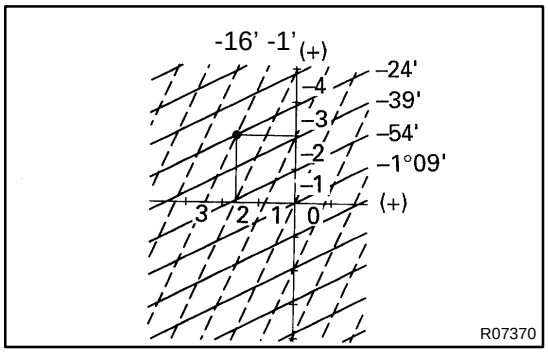

Example
Measurements (Installation angle):
Intermediate shaft: 1˚50'
Propeller shaft: 2˚14'
Differential: 2˚15'
Joint angle:
No.2: 1˚50' - 2˚14' = -24'
No.3: 2˚14' - 2˚15' = -1'

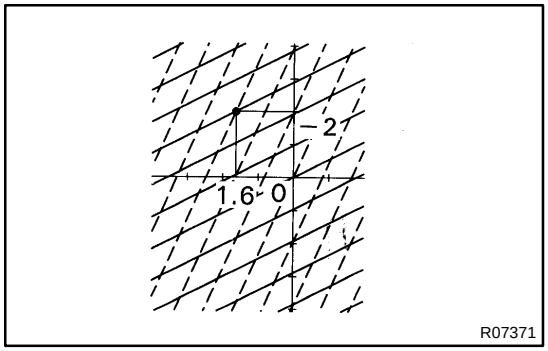

Adjustment:
Center support bearing
Standard parts: 4 mm - 2 mm = 2 mm
Use adjusting washers which are 2 mm (0.079 in.) thicker.
Differential
Use adjusting shims which are 1.6 mm (0.063 in.) thicker.

HINT:

- ★ Maintain the same thickness for the adjusting washers and adjusting shims on both the left and right sides.
- ★ If a washer and shim of the exact thickness are not available, use the parts which are the nearest in thickness.

NOTICE:

Check the joint angle once again after making the adjustment.

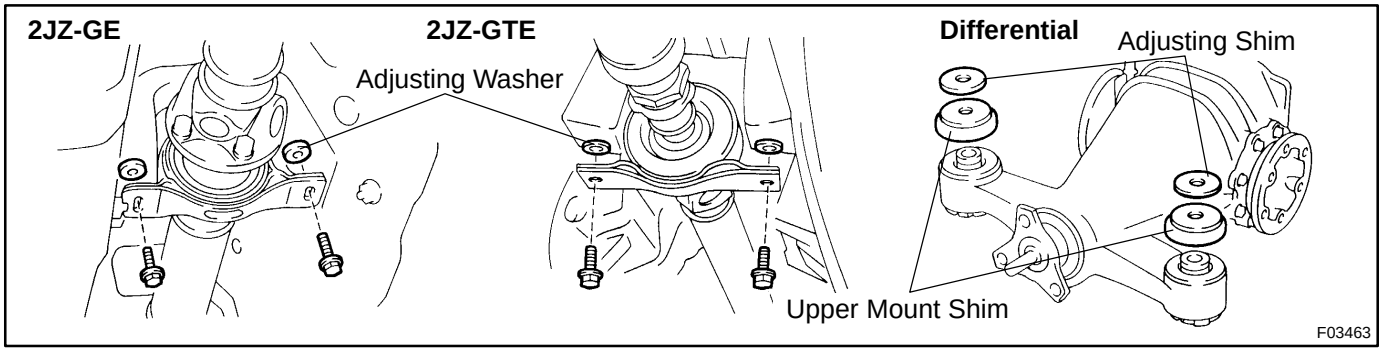

ADJUSTMENT CHART

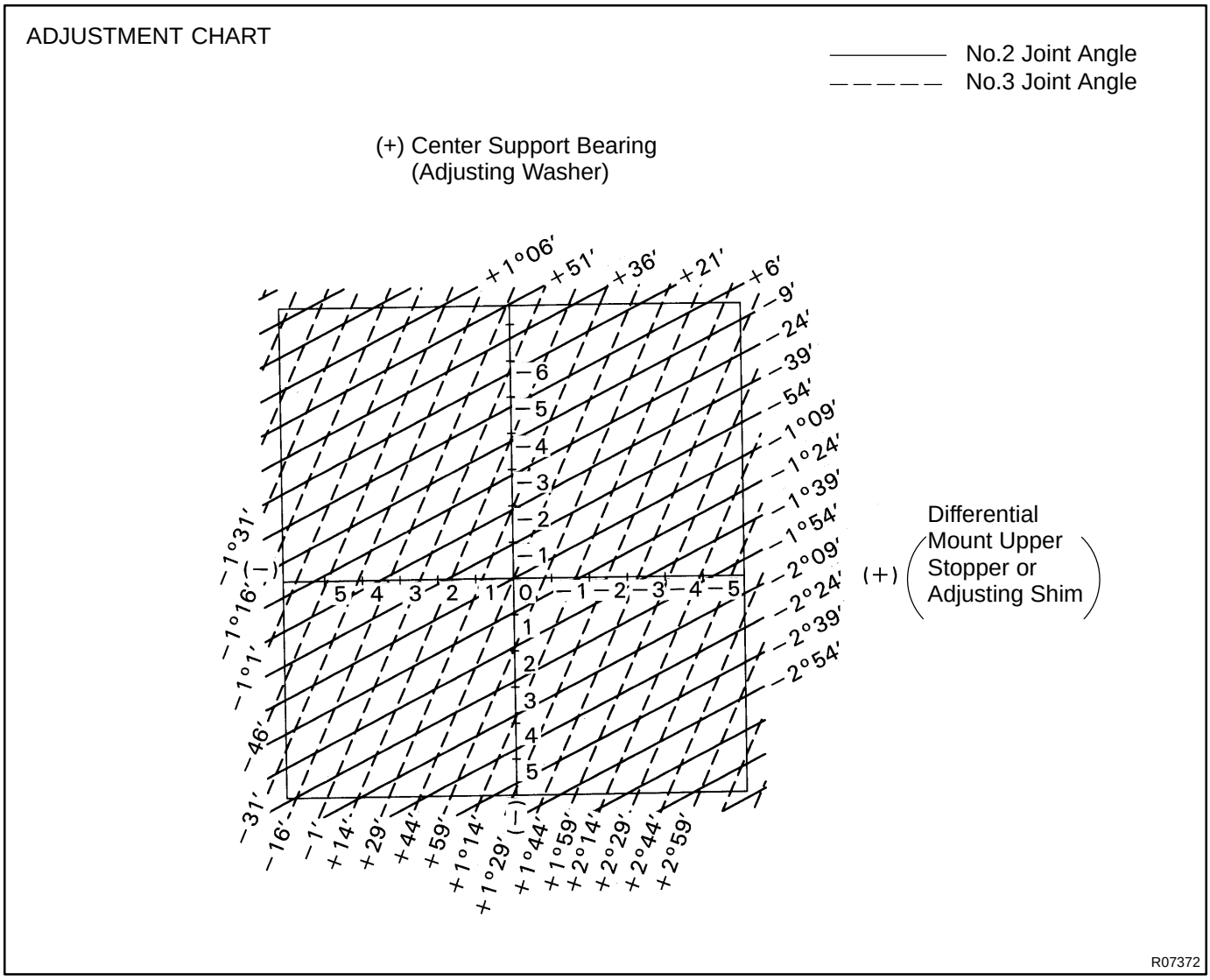

PROPELLER SHAFT ASSEMBLY

PR06U-01

COMPONENTS

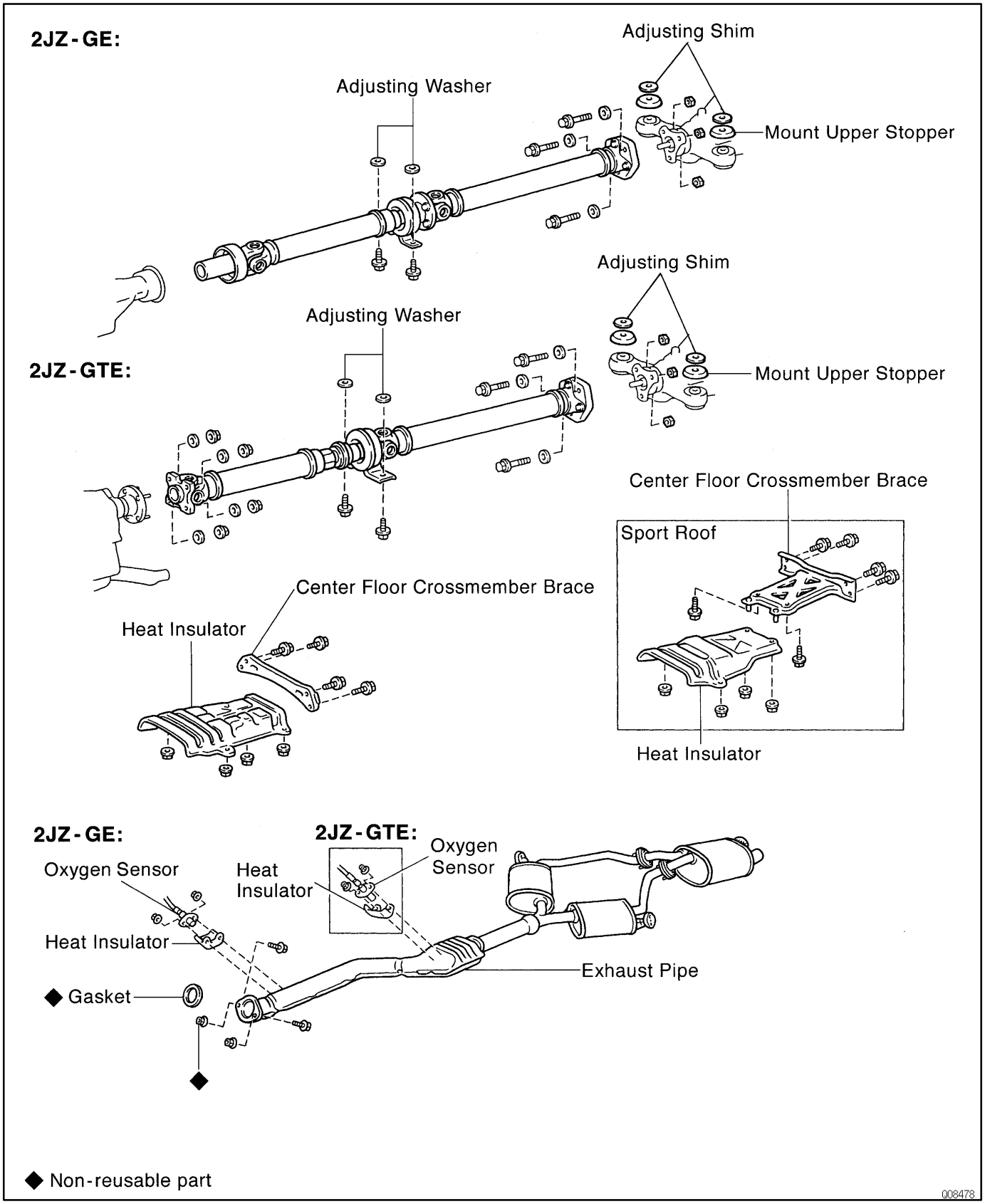

2JZ-GE

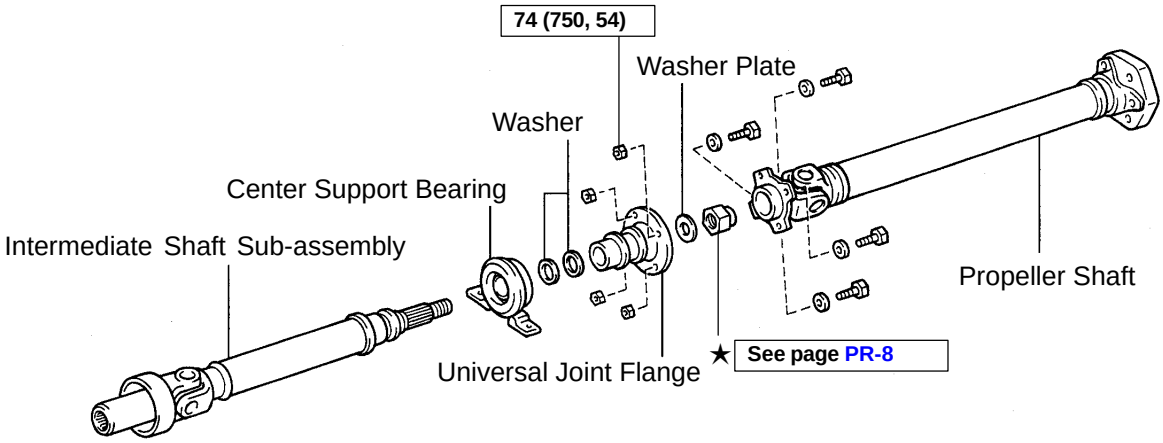

2JZ-GTE

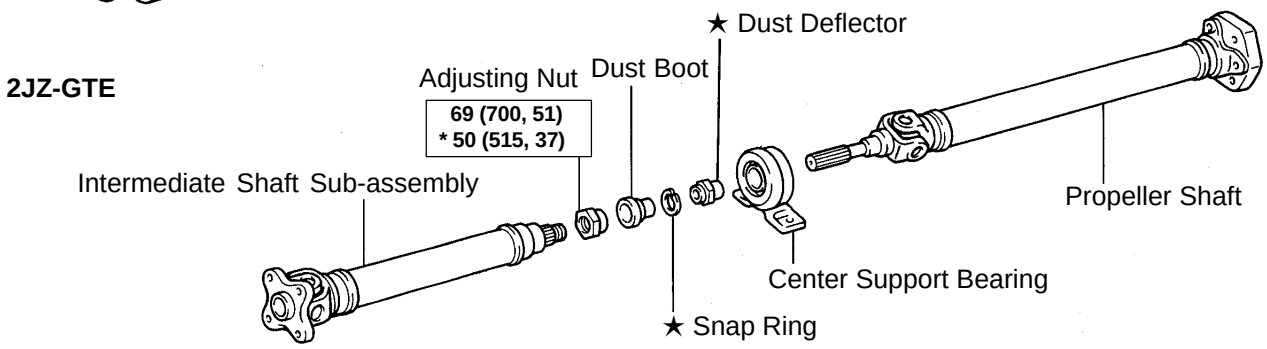

N·m (kgf·cm, ft·lbf) : Specified torque
★ Non-reusable part
* For use with SST

Q09642

PR06V-01

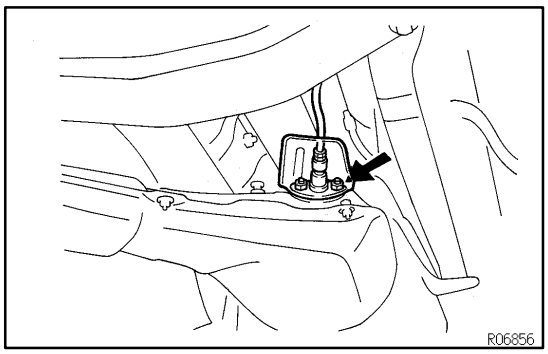

REMOVAL

1. REMOVE OXYGEN SENSOR

(a) Remove the 2 bolts.

(b) Remove the oxygen sensor and heat insulator.

2. REMOVE EXHAUST PIPE (See page EM-94)

3. REMOVE HEAT INSULATOR

Remove the 4 nuts and heat insulator.

4. NORMAL ROOF:
REMOVE CENTER FLOOR CROSSMEMBER BRACE

Remove the 4 bolts and crossmember brace.

5. SPORT ROOF:
REMOVE CENTER FLOOR CROSSMEMBER BRACE

Remove the 6 bolts and crossmember brace.

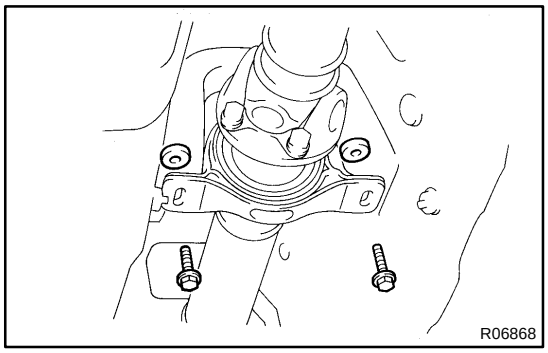

6. 2JZ-GE:
REMOVE PROPELLER SHAFT

(a) Remove the 2 center support bearing set bolts and adjusting washers.

HINT:

Production vehicles are not equipped with adjusting washers.

NOTICE:

When removing the set bolts, support the center support bearing by hand so that the transmission and intermediate shaft, and propeller shaft and differential, remain in a straight line.

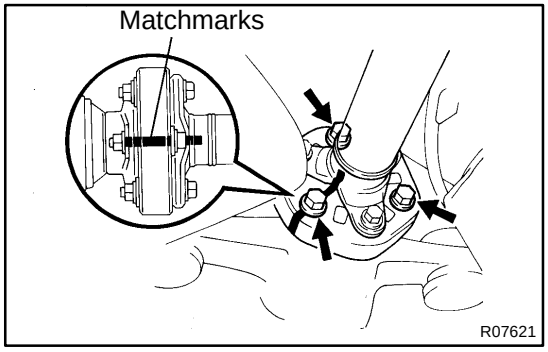

(b) Place matchmarks on the differential companion flange and flexible coupling.

(c) Remove the 3 bolts inserted in the differential companion flange.

NOTICE:

The bolts inserted in the propeller shaft companion flange should not be removed.

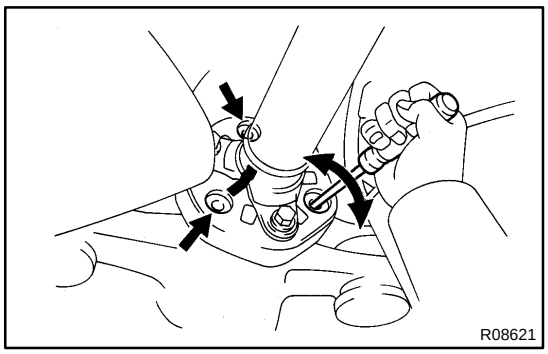

(d) Separate the flexible coupling from the differential side.
HINT:
If the flexible coupling cannot be easily separated by hand, insert a screwdriver into the bolt hole of the flexible coupling, as shown in the illustration, then pry the coupling out.
NOTICE:
Do not bring the screwdriver blade in direct contact with the flexible coupling's rubber portion.
(e) Pull the yoke from the transmission.

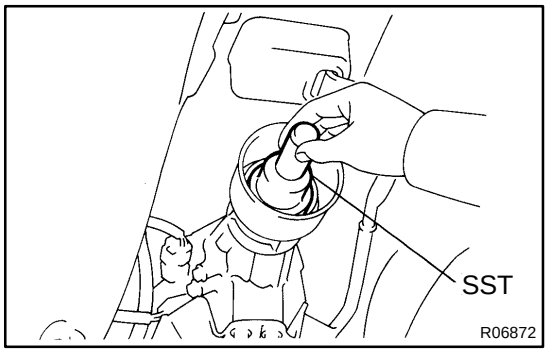

(f) M/T:
Install SST in the transmission to prevent oil leakage.
SST 09325-20010
(g) A/T:
Install SST in the transmission to prevent oil leakage.
SST 09325-40010

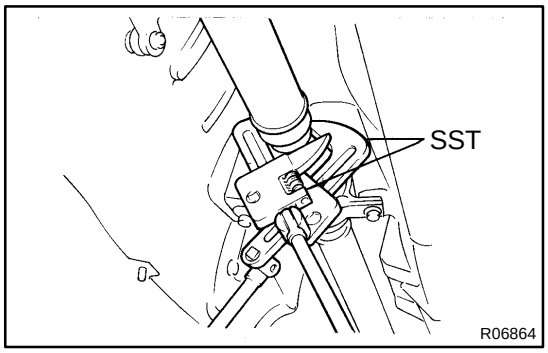

7. 2JZ-GTE:
REMOVE PROPELLER SHAFT
(a) Using SST, loosen the adjusting nut until it can be turned by hand.
SST 09922-10010
HINT:
Use 2 of the same type SST.

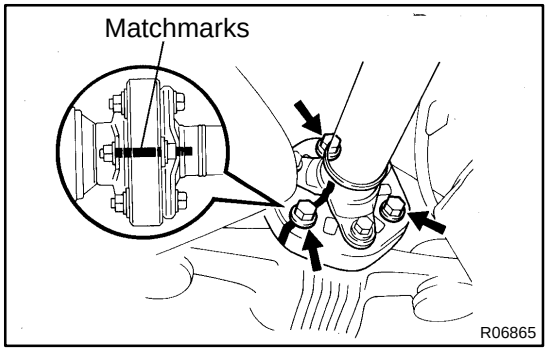

(b) Place matchmarks on the differential companion flange and flexible coupling.
(c) Remove the 3 bolts inserted in the differential companion flange.
NOTICE:
The bolts inserted in the propeller shaft companion flange should not be removed.

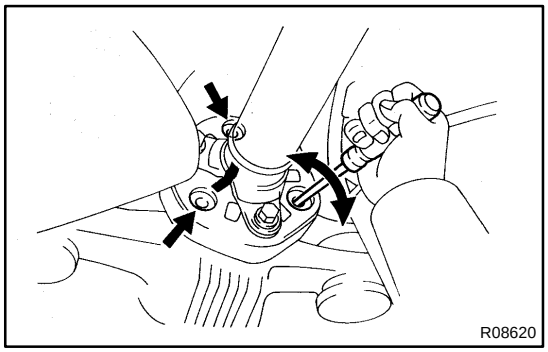

(d) Separate the flexible coupling from the differential side.
HINT:
If the flexible coupling cannot be easily separated by hand, insert a screwdriver into the bolt hole of the flexible coupling, as shown in the illustration, then pry the coupling out.
NOTICE:
Do not bring the screwdriver blade in direct contact with the flexible coupling's rubber portion.

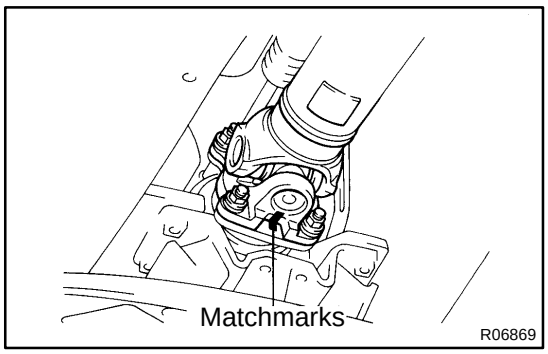

(e) Place matchmarks on the transmission companion flange and propeller shaft flange.
(f) Remove the 4 washers and nuts.

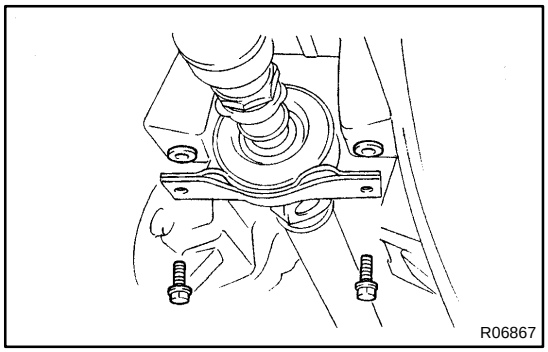

(g) Remove the 2 center support bearing set bolts and adjusting washers.

HINT:
Some vehicles are not equipped with and adjusting washer.

NOTICE:
When removing the set bolts, support the center support bearing by hand so that the transmission and intermediate shaft, and propeller shaft and differential, remain in a straight line.

(h) Remove the propeller shaft from the transmission.
(i) Push the rear propeller shaft straight forward to compress the propeller shaft and pull out the propeller shaft from the centering pin of the differential.

NOTICE:
Press the propeller shaft straight ahead to keep the transmission and intermediate shaft aligned straight.

(j) Pull the propeller shaft out toward the vehicle's rear.

NOTICE:
The intermediate shaft and propeller shaft should not be separated.

PR02K-01

INSPECTION

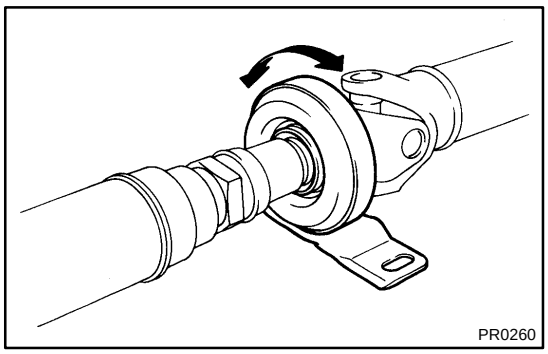

1. INSPECT CENTER SUPPORT BEARING

(a) Check if the bearing turns smoothly.

(b) Check for crack in or damage to the cushion.

If the center support bearing is damaged, worn or does not turn smoothly, replace it.

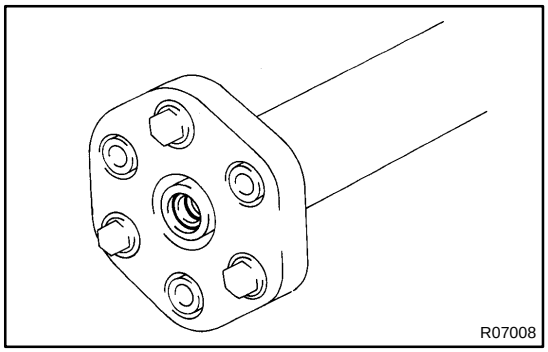

2. INSPECT FLEXIBLE COUPLINGS

Check for cracks in or damage to rear flexible couplings.

If the flexible coupling is damaged, replace the propeller shaft assembly.

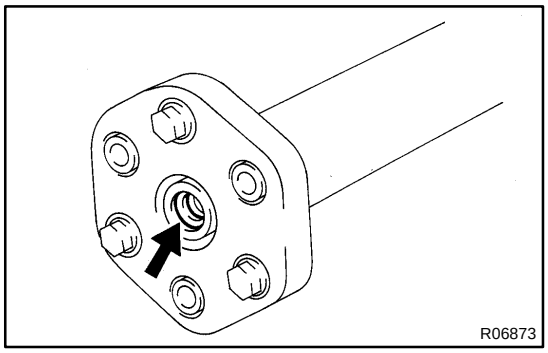

3. INSPECT FLEXIBLE COUPLING CENTERING BEARING

Check for damage to the bushing.

If the bushing is damaged, replace the propeller shaft assembly.

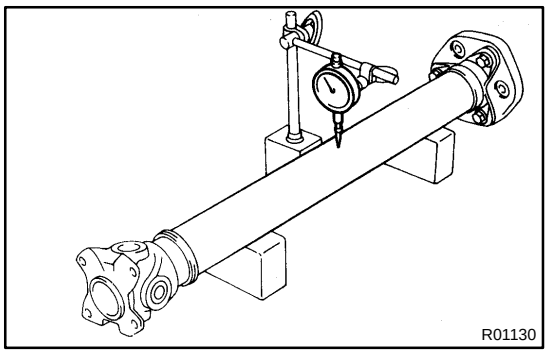

4. INSPECT RUNOUT OF INTERMEDIATE SHAFT AND PROPELLER SHAFT

Maximum runout: 0.8 mm (0.031 in.)

If the runout is greater than the maximum, replace the propeller shaft assembly.

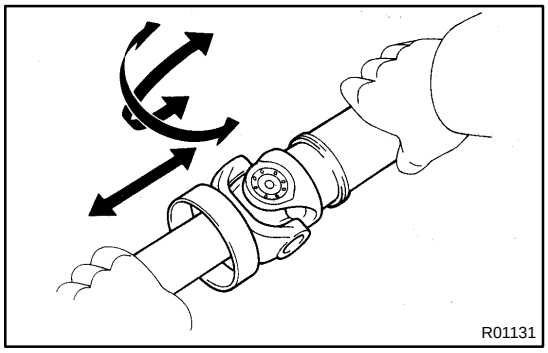

5. INSPECT SPIDER BEARING

(a) Check if the spider bearing rotates smoothly.

(b) Check if there any play in the spider bearing.

If necessary, replace the propeller shaft assembly.

PR02L-01

REPLACEMENT

NOTICE:

Be careful not to grip the propeller shaft tube too tightly in the vise as this will cause deformation.

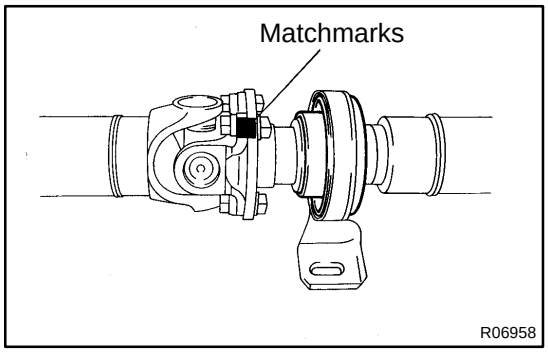

1. 2JZ-GE:
REPLACE CENTER SUPPORT BEARING

(a) Separate the propeller shaft and intermediate shaft.
  (1) Place matchmarks on the flanges.
  (2) Remove the 4 bolts, washers and nuts.

(b) Remove the center support bearing from intermediate shaft.
  (1) Using a chisel and hammer, loosen the staked part of the nut.

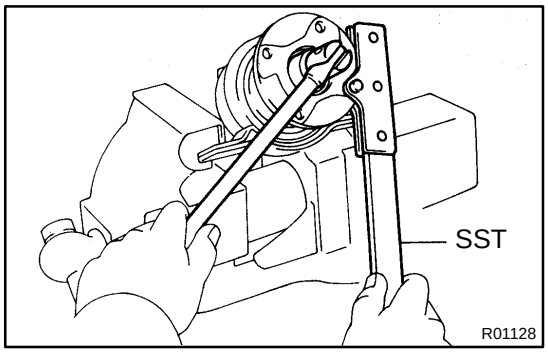

  (2) Using SST to hold the flange, remove the nut.
  SST 09930-00021
  (3) Remove the washer.

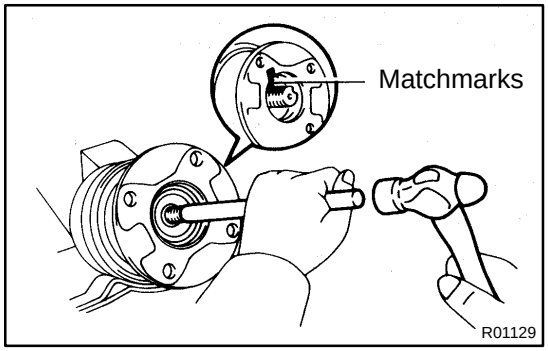

  (4) Place matchmarks on the flange and intermediate shaft.
  (5) Using a brass and hammer, remove the flange, 2 washers and center support bearing from the intermediate shaft.

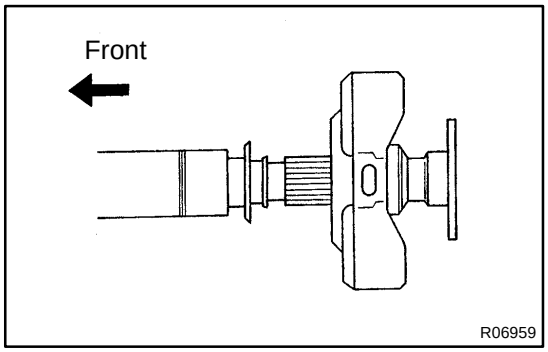

(c) Install a new center support bearing on intermediate shaft.

HINT:
Install the center support bearing in the direction, as shown and install the 2 washers.

(d) Install the flange on intermediate shaft.
  (1) Coat the spline of the intermediate shaft with MP grease.

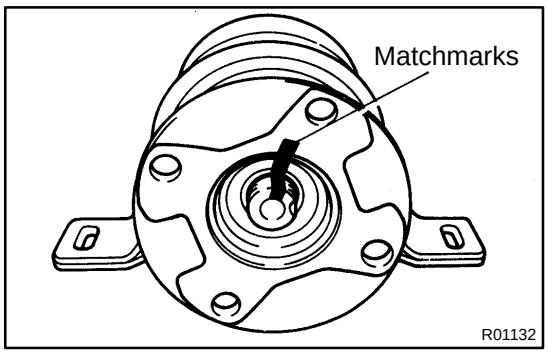

(2) Place the flange on the shaft and align the matchmarks.

HINT:

If replacing either the center flange or intermediate shaft, reassemble them so that the front yoke of the intermediate shaft and the rear yoke of the propeller shaft are facing in the same direction.

(3) Install the washer.

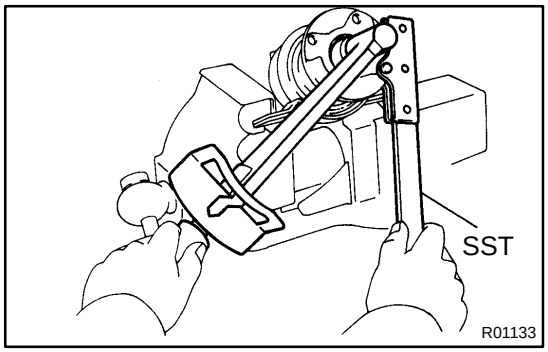

(4) Using SST to hold the flange, press the bearing into position by tightening down a new nut.

SST 09330-00021

Torque: 181 N·m (1,850 kgf·cm, 134 ft·lbf)

(5) Loosen the nut.

(6) Torque the nut again.

Torque: 69 N·m (700 kgf·cm, 51 ft·lbf)

(7) Using a punch and hammer, stake the shaft.

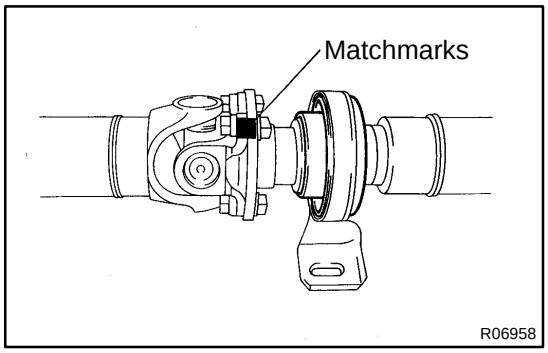

(e) Install the propeller shaft.

(1) Align the matchmarks on the flanges and connect the flanges with 4 bolts, washers and nuts.

HINT:

If replacing either the center flange or intermediate shaft, reassemble them so that the front yoke of the intermediate shaft and the rear yoke of the propeller shaft are facing in the same direction.

(2) Torque the 4 bolts and nuts.

Torque: 74 N·m (750 kgf·cm, 54 ft·lbf)

2. 2JZ-GTE:

REPLACE CENTER SUPPORT BEARING

(a) Separate the intermediate shaft and propeller shaft.

(1) Place matchmarks on the intermediate shaft and propeller shaft.

(2) Separate the intermediate shaft and propeller shaft.

(3) Remove the dust boot from the propeller shaft.

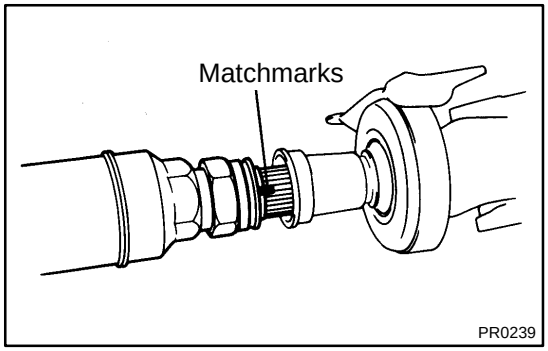

HINT:

If the dust boot is reused, remove it after wrapping vinyl tape around the spline, so it will not be damage.

(b) Remove the center support bearing.

(1) Using a snap ring expander, remove the snap ring.

(2) Using SST, remove the center support bearing with dust deflector.

SST 09950-00020

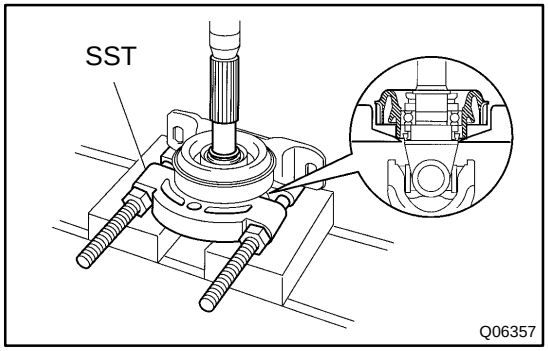

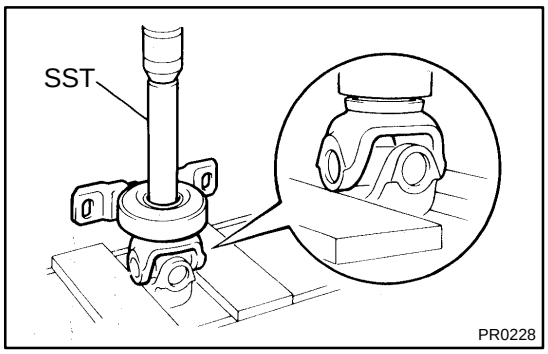

(c) Install a new center support bearing.
(1) Using SST and a press, install the center support bearing.
SST 09330-50010

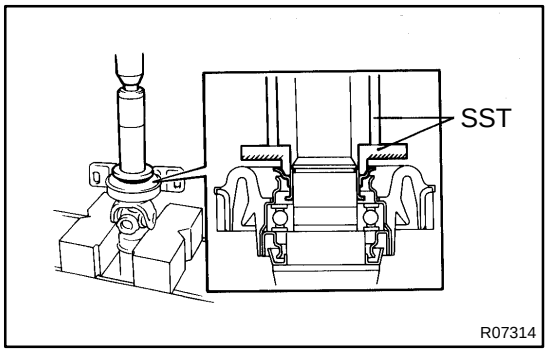

(2) Using SST and a press, insert a new dust deflector until it almost touches the rubber of the center support bearing.
SST 09608-00071, 09608-06041

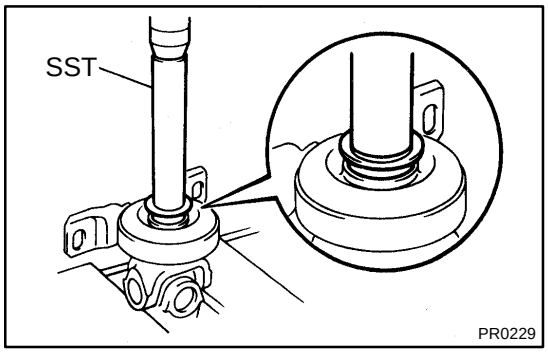

(3) Using SST and a press, install the dust deflector to the end.
SST 09330-50010
(4) Using a snap ring expander, install a new snap ring.

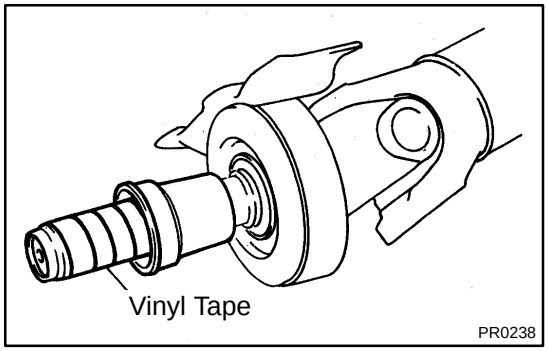

(d) Assemble the intermediate shaft and propeller shaft.
(1) Install the dust boot.

NOTICE:

Assemble after wrapping vinyl tape around the spline so it will not damage the boot.

(2) Apply grease to the spline.
Grease:
Molybdenum disulfide lithium base, NLGI No.2.
(3) Align the matchmarks and assemble the intermediate shaft and propeller shaft.
(4) Cover the adjusting nut with the dust boot.
(5) Tighten the adjusting nut fully by hand.

HOW TO USE THIS MANUAL

IN04A-01

GENERAL INFORMATION

1. INDEX

An INDEX is provided on the first page of each section to guide you to the item to be repaired. To assist you in finding your way through the manual, the Section Title and major heading are given at the top of every page.

2. GENERAL DESCRIPTION

At the beginning of each section, a General Description is given that pertains to all repair operations contained in that section.

Read these precautions before starting any repair task.

3. TROUBLESHOOTING

TROUBLESHOOTING tables are included for each system to help you diagnose the problem and find the cause. The fundamentals of how to proceed with troubleshooting are described on page IN-17 . Be sure to read this before performing troubleshooting.

4. PREPARATION

Preparation lists the SST (Special Service Tools), recommended tools, equipment, lubricant and SSM (Special Service Materials) which should be prepared before beginning the operation and explains the purpose of each one.

5. REPAIR PROCEDURES

Most repair operations begin with an overview illustration. It identifies the components and shows how the parts fit together.

Example:

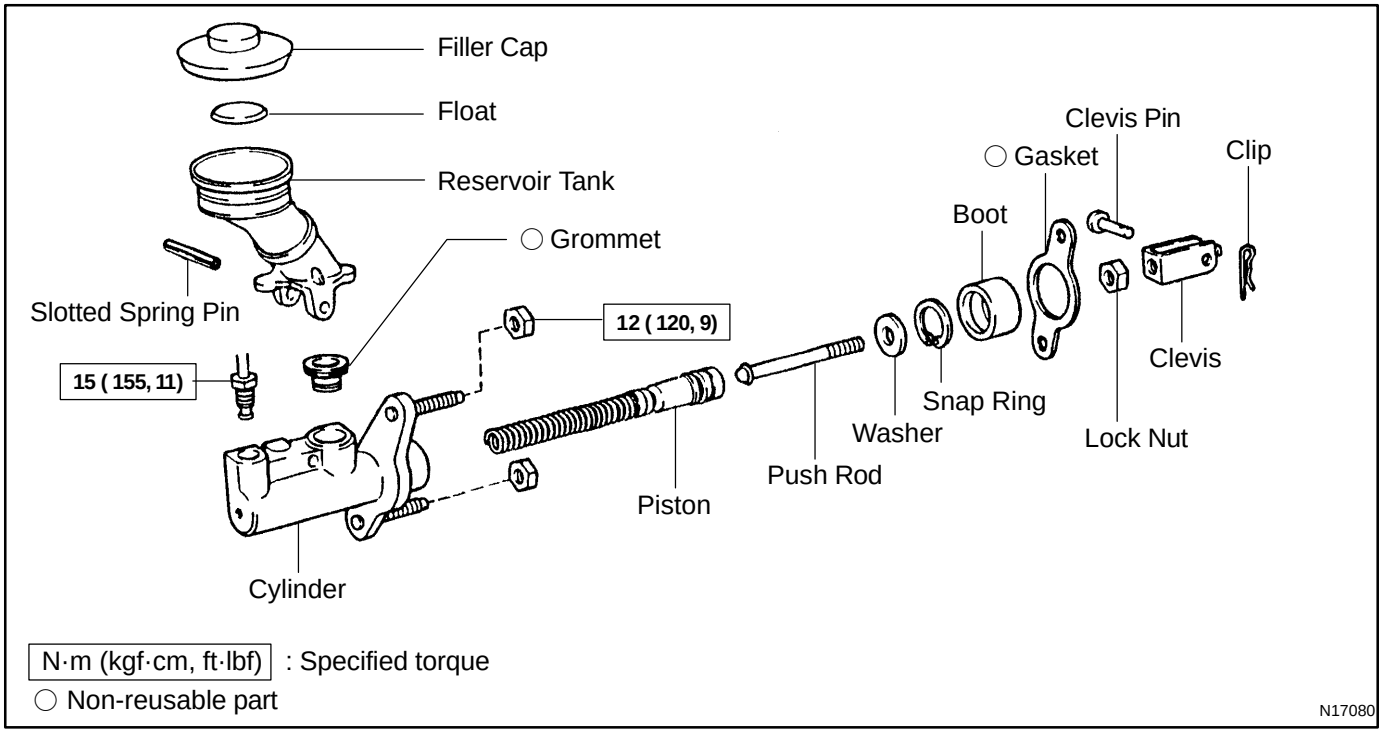

The procedures are presented in a step-by-step format:

- The illustration shows what to do and where to do it.
- The task heading tells what to do.
- The detailed text tells how to perform the task and gives other information such as specifications and warnings.

Example:

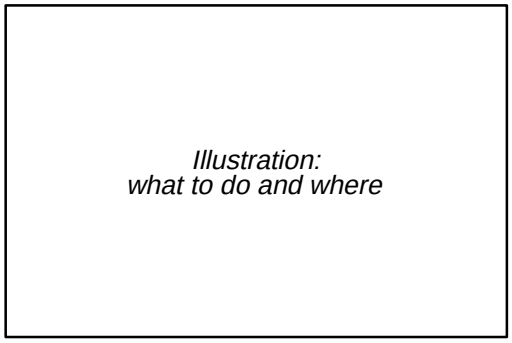

Task heading : what to do

21. CHECK PISTON STROKE OF OVERDRIVE BRAKE

(a) Place SST and a dial indicator onto the overdrive brake piston as shown in the illustration.

SST 09350-30020 (09350-06120)

Set part No. *Component part No.*

Detailed text : how to do task

(b) Measure the stroke applying and releasing the compressed air (392 - 785 kPa, 4 - 8 kgf.cm^2 or 57 - 114 psi) as shown in the illustration.

Piston stroke: 1.40 — 1.70 mm (0.0551 — 0.0669 in.)

Specification

This format provides the experienced technician with a FAST TRACK to the information needed. The upper case task heading can be read at a glance when necessary, and the text below it provides detailed information. Important specifications and warnings always stand out in bold type.

6. REFERENCES

References have been kept to a minimum. However, when they are required you are given the page to refer to.

7. SPECIFICATIONS

Specifications are presented in bold type throughout the text where needed. You never have to leave the procedure to look up your specifications. They are also found in Service Specifications section, for quick reference.

- CAUTIONS are presented in bold type, and indicate there is a possibility of injury to you or other people.
- NOTICES are also presented in bold type, and indicate the possibility of damage to the components being repaired.
- HINTS are separated from the text but do not appear in bold. They provide additional information to help you perform the repair efficiently.

8. SI UNIT

The UNITS given in this manual are primarily expressed according to the SI UNIT (International System of Unit), and alternately expressed in the metric system and in the English System.

Example:

Torque: 30 N·m (310 kgf·cm, 22 ft·lbf)

IDENTIFICATION INFORMATION

IN04B-01

VEHICLE IDENTIFICATION AND ENGINE SERIAL NUMBER

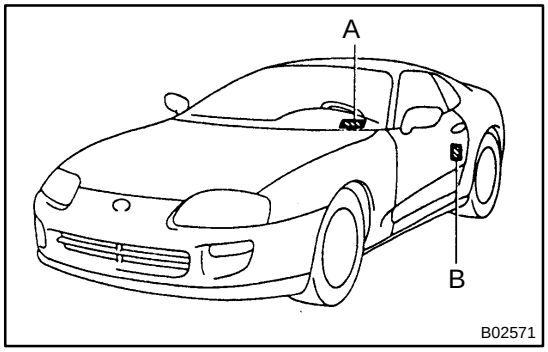

1. VEHICLE IDENTIFICATION NUMBER

The vehicle identification number is stamped on the vehicle identification number plate and certification label.

A: Vehicle Identification Number plate

B: Certification Label

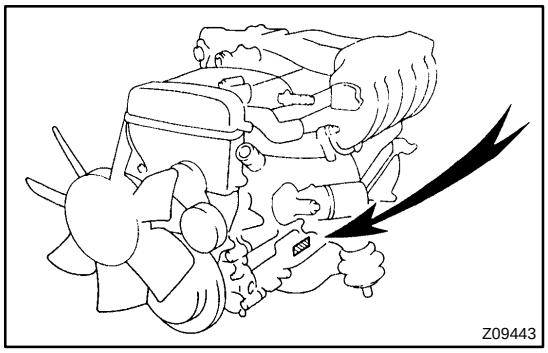

2. ENGINE SERIAL NUMBER

The engine serial number is stamped on the engine block as shown.

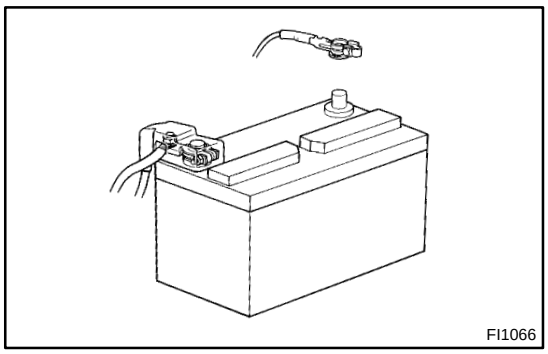
FI1066

REPAIR INSTRUCTIONS

IN04C-01

GENERAL INFORMATION

1. BASIC REPAIR HINT

(a) Use fender, seat and floor covers to keep the vehicle clean and prevent damage.

(b) During disassembly, keep parts in the appropriate order to facilitate reassembly.

(c) Observe the following:

(1) Before performing electrical work, disconnect the negative (-) terminal cable from the battery.

(2) If it is necessary to disconnect the battery for inspection or repair, always disconnect the negative (-) terminal cable which is grounded to the vehicle body.

(3) To prevent damage to the battery terminal, loosen the cable nut and raise the cable straight up without twisting or prying it.

(4) Clean the battery terminals and cable ends with a clean shop rag. Do not scrape them with a file or other abrasive objects.

(5) Install the cable ends to the battery terminals with the nut loose, and tighten the nut after installation. Do not use a hammer to tap the cable ends onto the terminals.

(6) Be sure the cover for the positive (+) terminal is properly in place.

(d) Check hose and wiring connectors to make sure that they are secure and correct.

(e) Non-reusable parts

(1) Always replace cotter pins, gaskets, O-rings and oil seals etc. with new ones.

(2) Non-reusable parts are indicated in the component illustrations by the "○" symbol.

(f) Precoated parts

Precoated parts are bolts and nuts, etc. that are coated with a seal lock adhesive at the factory.

(1) If a precoated part is retightened, loosened or caused to move in any way, it must be recoated with the specified adhesive.

(2) When reusing precoated parts, clean off the old adhesive and dry with compressed air. Then apply the specified seal lock adhesive to the bolt, nut or threads.

(3) Precoated parts are indicated in the component illustrations by the "● " symbol.

(g) When necessary, use a sealer on gaskets to prevent leaks.

(h) Carefully observe all specifications for bolt tightening torques. Always use a torque wrench.

(i) Use of special service tools (SST) and special service materials (SSM) may be required, depending on the nature of the repair. Be sure to use SST and SSM where specified and follow the proper work procedure. A list of SST and SSM can be found in the preparation part at the front of each section in this manual.

Medium Current Fuse and High Current Fuse Equal Amperage Rating

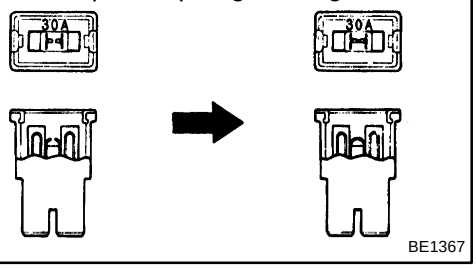

BE1367

(j) When replacing fuses, be sure the new fuse has the correct amperage rating. DO NOT exceed the rating or use one with a lower rating.

Illustration	Symbol	Part Name	Abbreviation
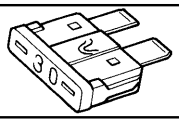 BE5594	 IN0365	FUSE	FUSE
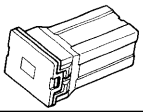 BE5595	 IN0366	MEDIUM CURRENT FUSE	M-FUSE
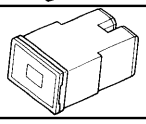 BE5596	 IN0367	HIGH CURRENT FUSE	H-FUSE
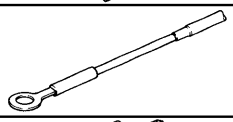 BE5597	 IN0367	FUSIBLE LINK	FL
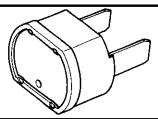 BE5598	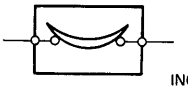 IN0368	CIRCUIT BREAKER	CB

V00076

(k) Care must be taken when jacking up and supporting the vehicle. Be sure to lift and support the vehicle at the proper locations (See page IN-8).

(1) If the vehicle is to be jacked up only at the front or rear end, be sure to block the wheels at the opposite end in order to ensure safety.

(2) After the vehicle is jacked up, be sure to support it on stands. It is extremely dangerous to do any work on a vehicle raised on a jack alone, even for a small job that can be finished quickly.

(l) Observe the following precautions to avoid damage to the following parts:

(1) Do not open the cover or case of the ECU, ECM, PCM or TCM unless absolutely necessary. (If the IC terminals are touched, the IC may be destroyed by static electricity.)

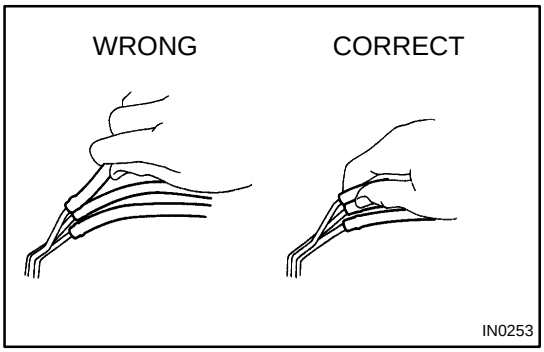

(2) To disconnect vacuum hoses, pull on the end, not the middle of the hose.

(3) To pull apart electrical connectors, pull on the connector itself, not the wires.

(4) Be careful not to drop electrical components, such as sensors or relays. If they are dropped on a hard floor, they should be replaced and not reused.

(5) When steam cleaning an engine, protect the electronic components, air filter and emissions-related components from water.

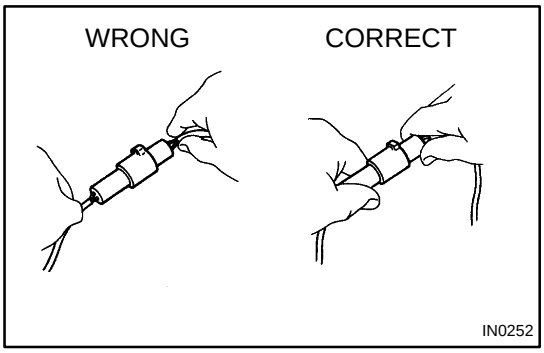

(6) Never use an impact wrench to remove or install temperature switches or temperature sensors.

(7) When checking continuity at the wire connector, insert the tester probe carefully to prevent terminals from bending.

(8) When using a vacuum gauge, never force the hose onto a connector that is too large. Use a step-down adapter for adjustment. Once the hose has been stretched, it may leak.

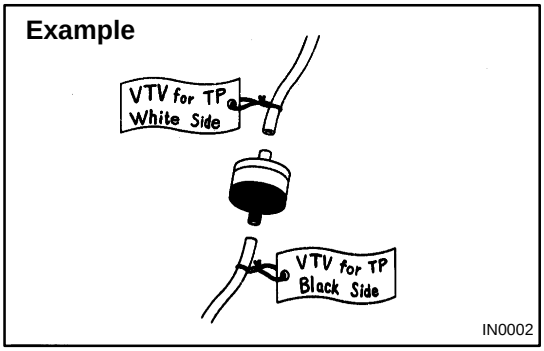

(m) Tag hoses before disconnecting them:

(1) When disconnecting vacuum hoses, use tags to identify how they should be reconnected.

(2) After completing a job, double check that the vacuum hoses are properly connected. A label under the hood shows the proper layout.

(n) Unless otherwise stated, all resistance is measured at an ambient temperature of 20˚C (68˚F). Because the resistance may be outside specifications if measured at high temperatures immediately after the vehicle has been running, measurements should be made when the engine has cooled down.

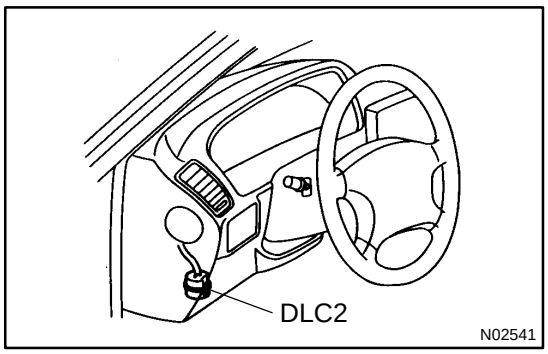

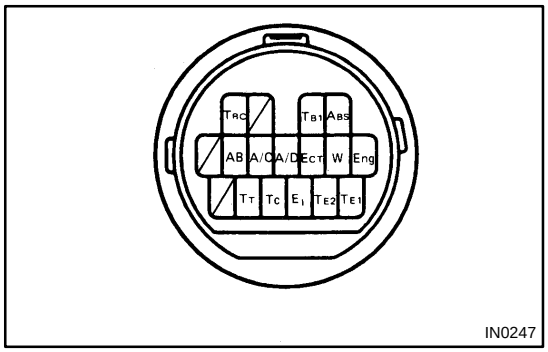

2. FOR VEHICLE WITH DATA LINK CONNECTOR 2 (DLC2)

(a) The DLC2 is provided inside the cabin (located under the left side of instrument panel) as a connector exclusively for diagnosis of data from the engine, automatic transmission, ABS, A/C, Airbag, Traction Control and Cruise Control System to improve serviceability.

(b) The DLC1 inside the engine compartment is used for engine adjustment.

(c) Connecting the following terminals of the DLC2 to terminal E_1 selects the diagnosis mode shown in the table.

NOTICE:

Pay enough attention to the terminal connection position as this will cause a malfunction.

Terminal	System
T_{E1}	Engine and automatic transmission (Normal mode)
T_{E2} and T_{E1}	Engine and automatic transmission (Test mode)
T_C	ABS, A/C, Airbag, Traction Control and Cruise Control System
T_T	Automatic transmission

2JZ-GE Engine

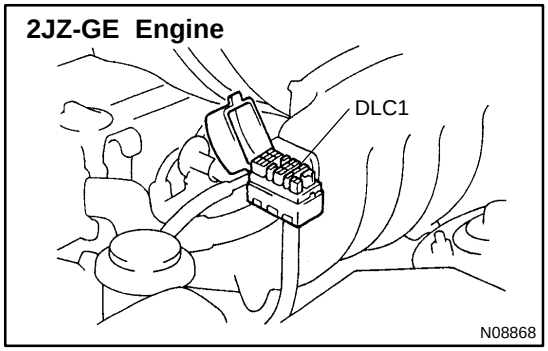

2JZ-GTE Engine

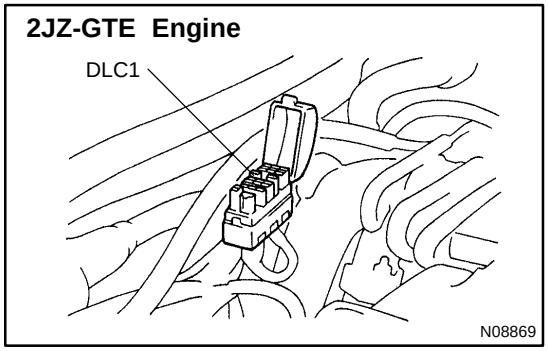

(d) Refer to the respective system for the inspection method.

HINT:

By connecting the DLC2 up to a monitor specifically designed for use with the DLC2, the diagnosis result for each system can be read easily.

IN04D-01

VEHICLE LIFT AND SUPPORT LOCATIONS

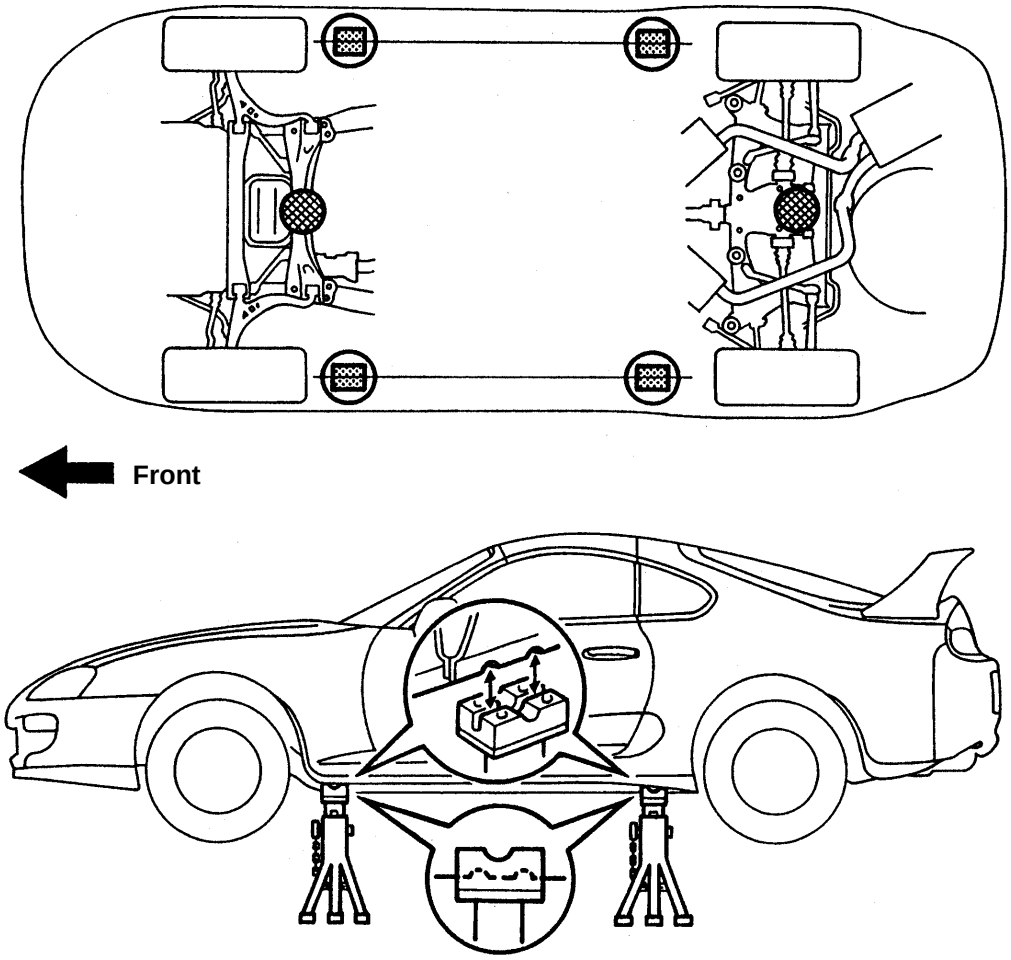

JACK POSITION

Front ..... Front crossmember

Rear ..... Differential carrier

CAUTION:

Before jacking-up the rear and front, make sure the car is not carrying any extra weight.

PANTOGRAPH JACK POSITION

SUPPORT POSITION

Safety stand and swing arm type lift .....

N19409

PLATE TYPE LIFT

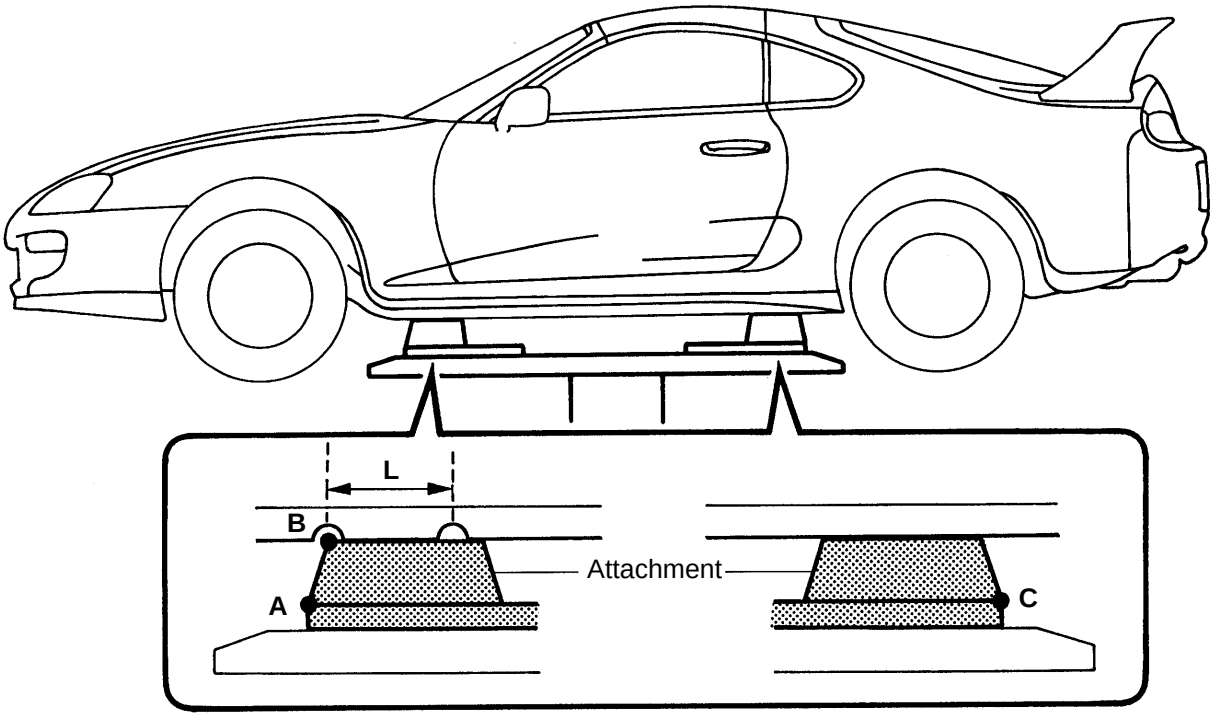

HINT:

Left and right set position — Place the vehicle over the center of the lift.

Front and rear set position
- Align the cushion gum ends of the plate with the attachment lower ends (A, C).
- Align the attachment upper end (B) with the front jack supporting point (L).

Attachment dimensions

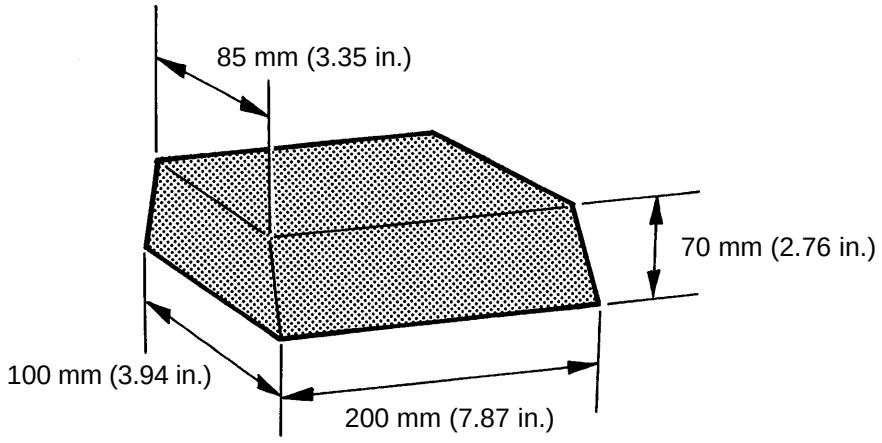

N19536

FOR ALL OF VEHICLES

IN04E-02

PRECAUTION

1. FOR VEHICLES EQUIPPED WITH SRS AIRBAG

(a) The TOYOTA SUPRA is equipped with an SRS (Supplemental Restraint System), such as the driver airbag, front passenger airbag.

Failure to carry out service operations in the correct sequence could cause the supplemental restraint system to unexpectedly deploy during servicing, possibly leading to a serious accident.

Further, if a mistake is made in servicing the supplemental restraint system, it is possible the SRS may fail to operate when required. Before servicing (including removal or installation of parts, inspection or replacement), be sure to read the following items carefully, then follow the correct procedure described in this manual.

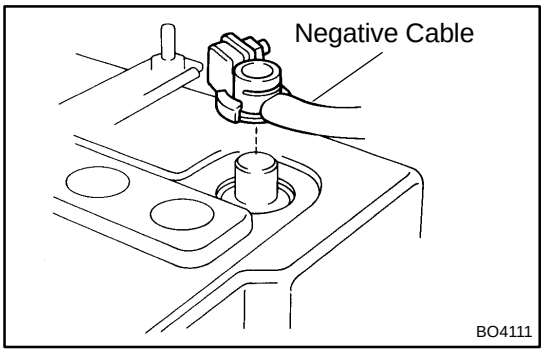

(b) GENERAL NOTICE

(1) Malfunction symptoms of the supplemental restraint system are difficult to confirm, so the diagnostic trouble codes become the most important source of information when troubleshooting. When troubleshooting the supplemental restraint system, always inspect the diagnostic trouble codes before disconnecting the battery (See page DI-555).

(2) Work must be started after 90 seconds from the time the ignition switch is turned to the ”LOCK” position and the negative (-) terminal cable is disconnected from the battery.

(The supplemental restraint system is equipped with a back-up power source so that if work is started within 90 seconds of disconnecting the negative (-) terminal cable from the battery, the SRS may deploy.)

When the negative (-) terminal cable is disconnected from the battery, memory of the clock and audio systems will be cancelled. So before starting work, make a record of the contents memorized by the audio memory system. Then when work is finished, reset the clock and audio systems as before.

To avoid erasing the memory of each memory system, never use a back-up power supply from outside the vehicle.

(3) Even in cases of a minor collision where the SRS does not deploy, the steering wheel pad, front passenger airbag assembly and front airbag sensor should be inspected (See page SR- 8, RS- 22, RS-34).
(4) Never use SRS parts from another vehicle. When replacing parts, replace them with new parts.
(5) Before repairs, remove the airbag sensor if shocks are likely to be applied to the sensor during repairs.
(6) Never disassemble and repair the airbag sensor assembly, steering wheel pad or front passenger airbag assembly in order to reuse it.
(7) If the airbag sensor assembly, steering wheel pad or front passenger airbag assembly have been dropped, or if there are cracks, dents or other defects in the case, bracket or connector, replace them with new ones.
(8) Do not expose the airbag sensor assembly, steering wheel pad and front passenger airbag assembly directly to hot air or flames.
(9) Use a volt/ohmmeter with high impedance (10 kΩ/V minimum) for troubleshooting of the electrical circuit.
(10) Information labels are attached to the periphery of the SRS components. Follow the instructions on the notices.
(11) After work on the supplemental restraint system is completed, check the SRS warning light (See page RS-1).

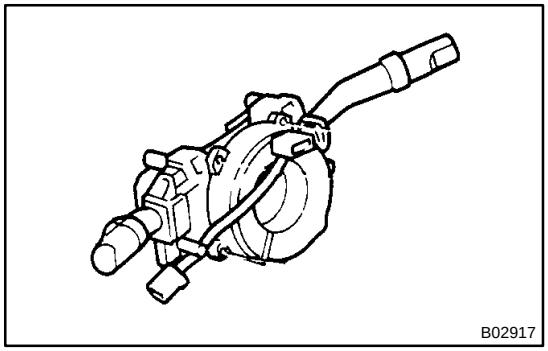
B02917

(c) SPIRAL CABLE (in Combination Switch)
The steering wheel must be fitted correctly to the steering column with the spiral cable at the neutral position, otherwise cable disconnection and other troubles may result. Refer to of this manual concerning correct steering wheel installation.

(d) STEERING WHEEL PAD (with Airbag)

(1) When removing the steering wheel pad or handling a new steering wheel pad, it should be placed with the pad top surface facing up.
In this case, the twin-lock type connector lock lever should be in the locked state and care should be taken to place it so the connector will not be damaged. In addition do not store a steering wheel pad on top of another one. Storing the pad with its metallic surface facing upward may lead to a serious accident if the airbag inflates for some reason.

(2) Never measure the resistance of the airbag squib. (This may cause the airbag to deploy, which is very dangerous.)

(3) Grease should not be applied to the steering wheel pad and the pad should not be cleaned with detergents of any kind.

(4) Store the steering wheel pad where the ambient temperature remains below 93˚C (200˚F), without high humidity and away from electrical noise.

(5) When using electric welding, first disconnect the airbag connector (yellow color and 2 pins) under the steering column near the combination switch connector before starting work.

(6) When disposing of a vehicle or the steering wheel pad alone, the airbag should be deployed using an SST before disposal (See page RS-1 1).
Carry out the operation in a safe place away from electrical noise.

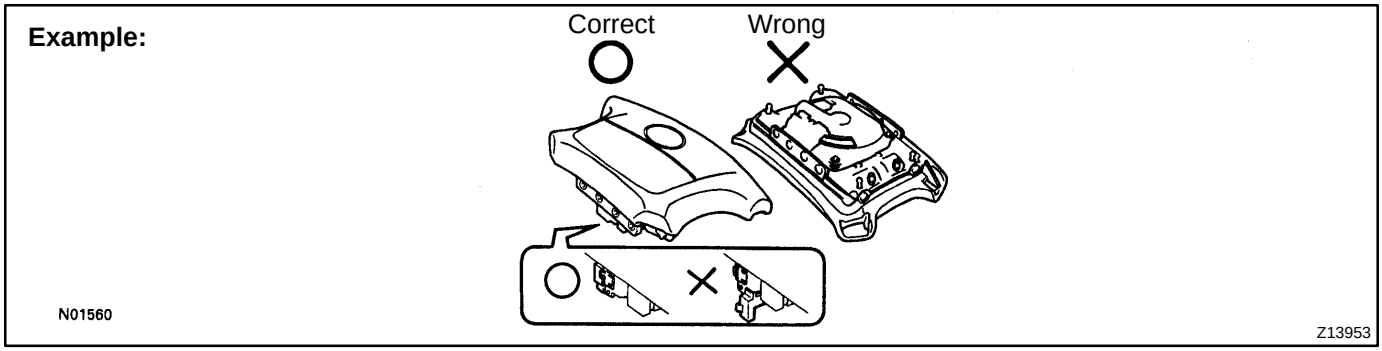

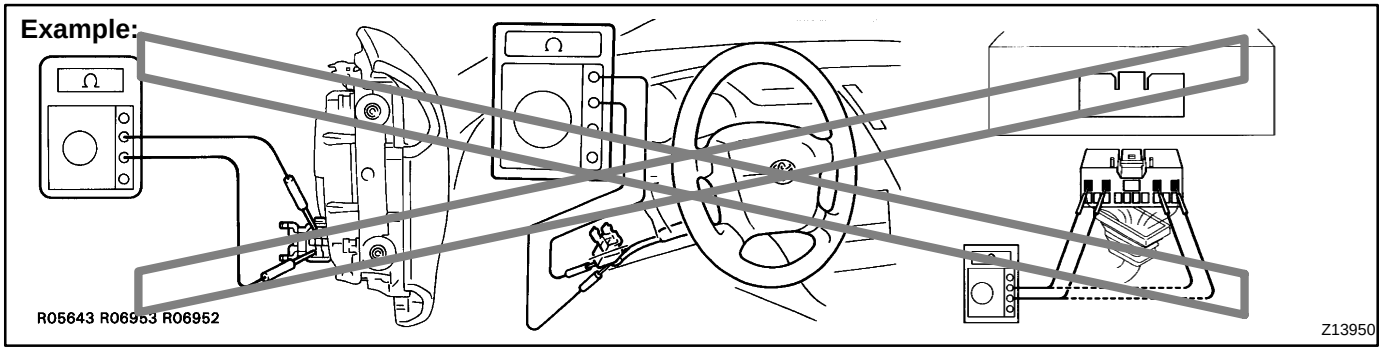

(e) FRONT PASSENGER AIRBAG ASSEMBLY

(1) Always store a removed or new front passenger airbag assembly with the airbag deployment direction facing up.
Storing the airbag assembly with the airbag deployment direction facing down could cause a serious accident if the airbag inflates.

(2) Never measure the resistance of the airbag squib. (This may cause the airbag deploy, which is very dangerous.)

(3) Grease should not be applied to the front passenger airbag assembly and the airbag door should not be cleaned with detergents of any kind.

(4) Store the airbag assembly where the ambient temperature remains below 93˚C (200˚F), without high humidity and away from electrical noise.

(5) When using electric welding, first disconnect the airbag connector (yellow color and 2 pins) installed on the glove compartment finish plate at the left side of the glove compartment before starting work.

(6) When disposing of a vehicle or the airbag assembly alone, the airbag should be deployed using an SST before disposal (See page RS-24).
Perform the operation in a safe place away from electrical noise.

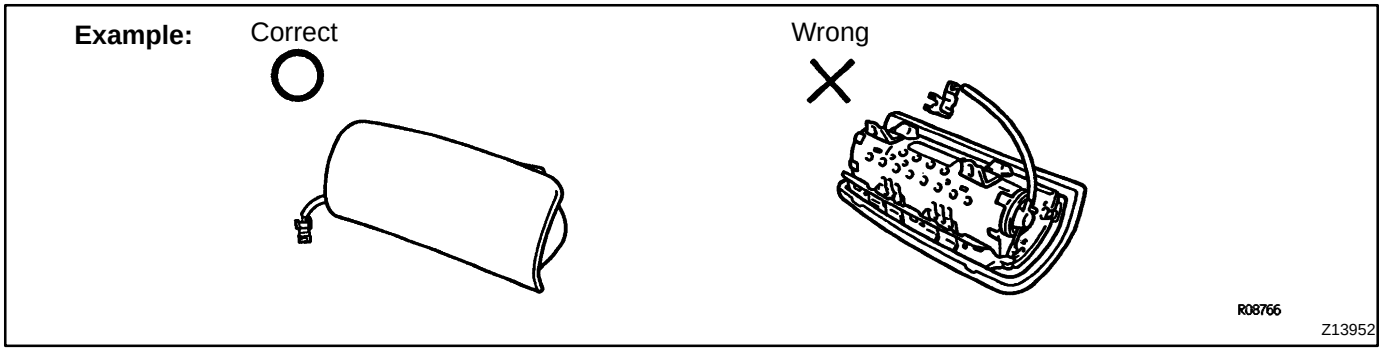

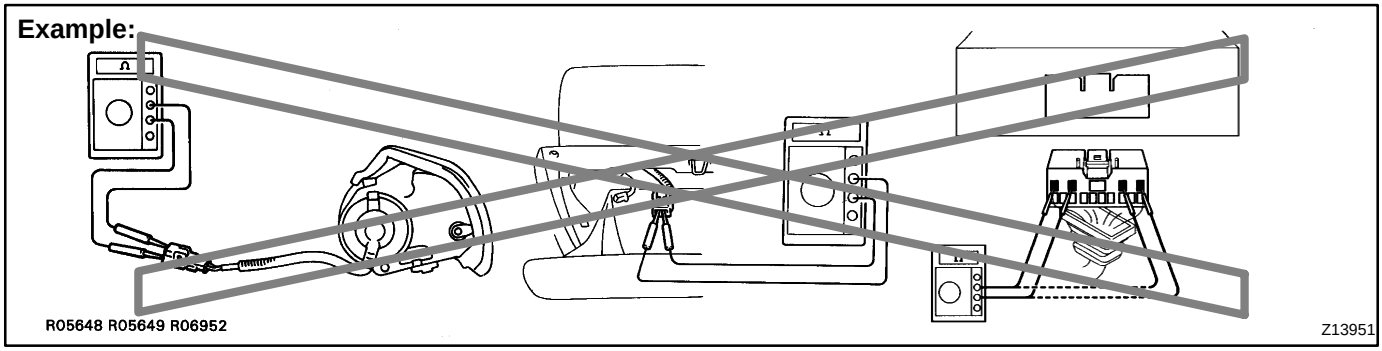

(f) AIRBAG SENSOR ASSEMBLY

(1) Never reuse the airbag sensor assembly involved in a collision when the SRS has deployed.

(2) The connectors to the airbag sensor assembly should be connected or disconnected with the sensor mounted on the floor. If the connectors are connected or disconnected while the airbag sensor assembly is not mounted to the floor, it could cause undesired ignition of the supplemental restraint system.

(3) Work must be started after 90 seconds from the time the ignition switch is turned to the "LOCK" position and the negative (-) terminal cable is disconnected from the battery, even if only loosening the set bolts of the airbag sensor assembly.

(g) WIRE HARNESS AND CONNECTOR

The SRS wire harness is integrated with the cowl wire harness assembly and floor wire harness assembly. The wires for the SRS wire harness are encased in a yellow corrugated tube. All the connectors for the system are also a standard yellow color. If the SRS wire harness becomes disconnected or the connector becomes broken due to an accident, etc., repair or replace it as shown on page RS-38 .

2. FOR VEHICLES EQUIPPED WITH A CATALYTIC CONVERTER

If large amounts of unburned gasoline flow into the converter, it may overheat and create a fire hazard. To prevent this, observe the following precautions and explain them to your customer.

(a) Use only unleaded gasoline.

(b) Avoid prolonged idling.
Avoid running the engine at idle speed for more than 20 minutes.

(c) Avoid spark jump test.

(1) Perform spark jump test only when absolutely necessary. Perform this test as rapidly as possible.

(2) While testing, never race the engine.

(d) Avoid prolonged engine compression measurement.
Engine compression tests must be done as rapidly as possible.

(e) Do not run engine when fuel tank is nearly empty.
This may cause the engine to misfire and create an extra load on the converter.

(f) Avoid coasting with ignition turned off and prolonged braking.

(g) Do not dispose of used catalyst along with parts contaminated with gasoline or oil.

3. IF VEHICLE IS EQUIPPED WITH MOBILE COMMUNICATION SYSTEM

(a) For vehicles with mobile communication systems such as two-way radios and cellular telephones, observe the following precautions.

(b) Install the antenna as far as possible away from the ECU and sensors of the vehicle's electronic system.

(c) Install the antenna feeder at least 20 cm (7.87 in.) away from the ECU and sensors of the vehicle's electronics systems. For details about ECU and sensors locations, refer to the section on the applicable component.
(d) Do not wind the antenna feeder together with the other wiring. As much as possible, also avoid running the antenna feeder parallel with other wire harnesses.
(e) Confirm that the antenna and feeder are correctly adjusted.
(f) Do not install powerful mobile communications system.

4. FOR USING OBDII SCAN TOOL OR TOYOTA HAND-HELD TESTER

Observe the following for safety reasons:

- Before using the OBDII scan tool or TOYOTA hand-held tester, the OBDII scan tool's instruction book or TOYOTA hand-held tester's operator manual should be read thoroughly.
- Be sure to route all cables securely when driving with the OBDII scan tool or TOYOTA hand-held tester connected to the vehicle. (i.e. Keep cables away from feet, pedals, steering wheel and shift lever.)
- Two persons are required when test driving with the OBDII scan tool or TOYOTA hand-held tester, one person to drive the vehicle and one person to operate the OBDII scan tool or TOYOTA hand-held tester.

5. FOR VEHICLES EQUIPPED WITH TRACTION CONTROL (TRAC) SYSTEM

When using a 2 wheel drum tester such as a speedometer tester or chassis dynamometer, etc., or jacking up the rear wheels and driving the wheels, always push in the TRAC cut ("TRAC OFF") switch and turn the TRAC system OFF.

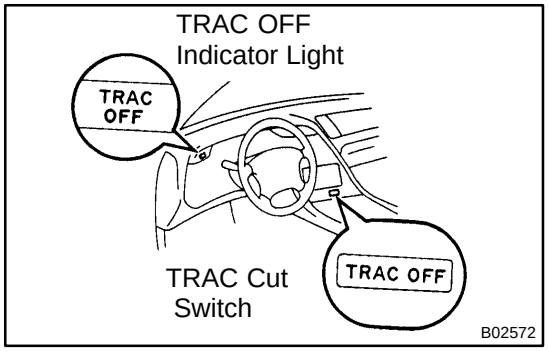

(a) Confirm TRAC system is OFF
  (1) Press the TRAC cut ("TRAC OFF") switch.
  (2) Check that the TRAC OFF indicator light comes on when the TRAC system is turned off by the TRAC cut switch.

HINT:
The TRAC OFF indicator light should always operate right after the engine is restarted.

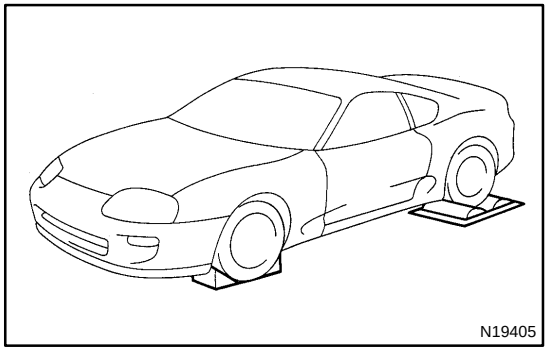

(3) Begin measurements.

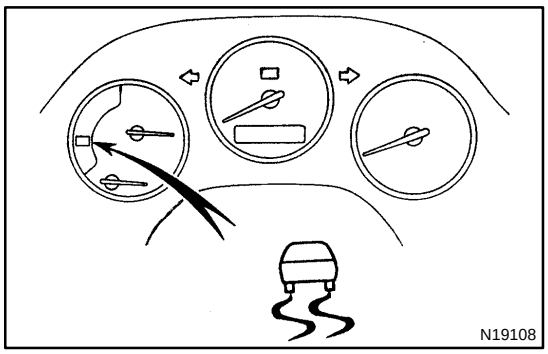

(4) Press the TRAC cut switch again to change the TRAC to oprative and check that the TRAC OFF indicator light goes off.

HINT:
The SLIP indicator light blinks when the TRAC system is operative.

6. INSPECTION AND ADJUSTMENT OF JOINT ANGLE DURING REMOVAL AND INSTALLATION OF PROPELLER SHAFT

When performing operations which involve the removal and installation of the propeller shaft, always check the joint angle. Make adjustments if necessary (See page PR-14).

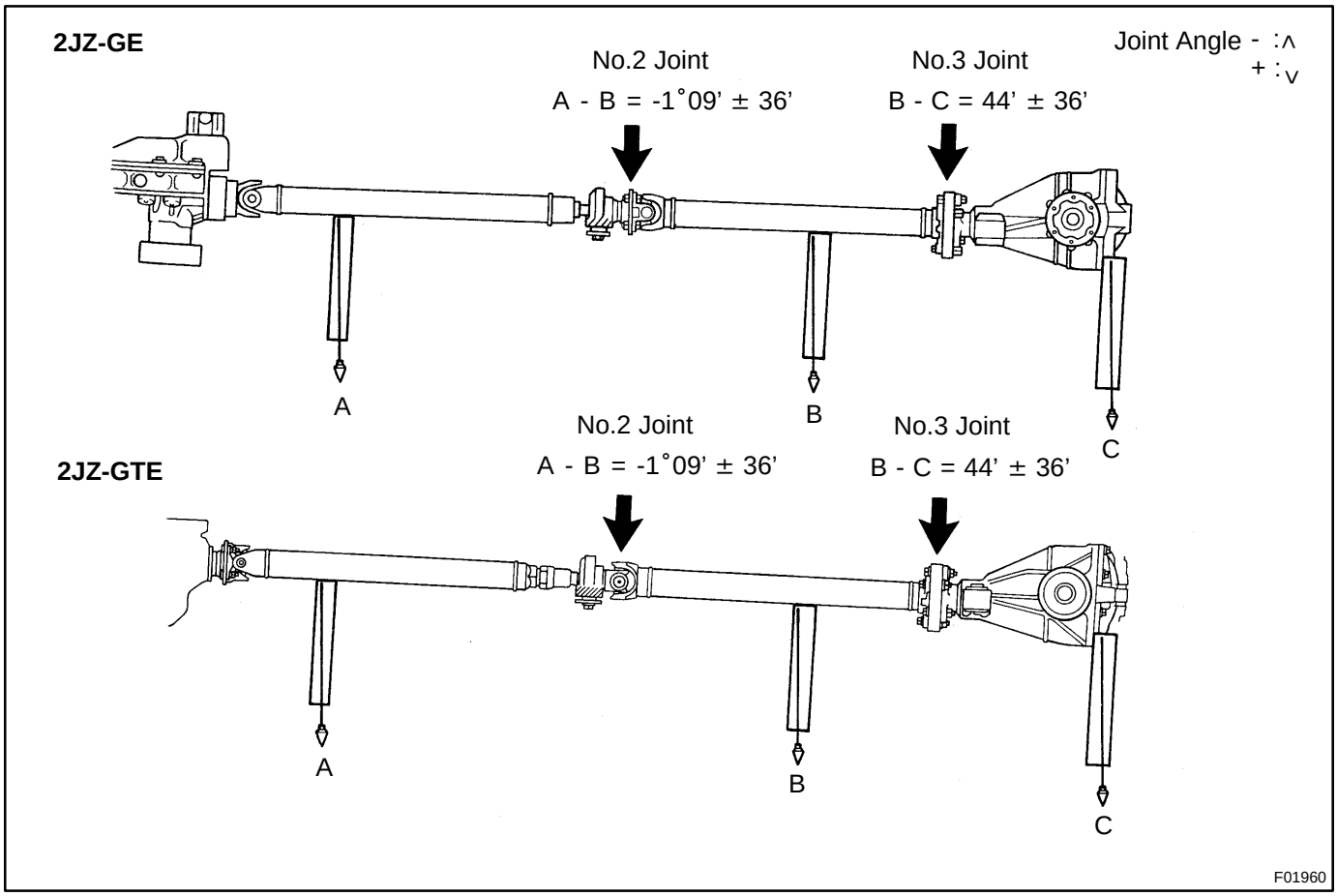

HOW TO TROUBLESHOOT ECU CONTROLLED SYSTEMS

IN04F-02

GENERAL INFORMATION

A large number of ECU controlled systems are used in the TOYOTA SUPRA. In general, the ECU controlled system is considered to be a very intricate system requiring a high level of technical knowledge and expert skill to troubleshoot. However, the fact is that if you proceed to inspect the circuits one by one, troubleshooting of these systems is not complex. If you have adequate understanding of the system and a basic knowledge of electricity, accurate diagnosis and necessary repair can be performed to locate and fix the problem. This manual is designed through emphasis of the above standpoint to help service technicians perform accurate and effective troubleshooting, and is compiled for the following major ECU controlled systems:

System	Page
1. Engine (2JZ-GE)	DI-1
2. Engine (2JZ-GTE)	DI-145
3. Automatic Transmission (2JZ-GE)	DI-316
4. Automatic Transmission (2JZ-GTE)	DI-371
5. Anti-Lock Brake System	DI-440
6. ABS & Traction control System	DI-499
7. Supplemental Restraint System	DI-555
8. Theft Deterrent System	DI-608
9. Cruise Control System	DI-660
11. Air Conditioning System	DI-711

The troubleshooting procedure and how to make use of it are described on the above pages.

FOR USING OBDII SCAN TOOL OR TOYOTA HAND-HELD TESTER

- Before using the OBDII scan tool or TOYOTA hand-held tester, the OBDII scan tool's instruction book or TOYOTA hand-held tester's operator manual should be read thoroughly.
- If the OBDII scan tool or TOYOTA hand-held tester cannot communicate with ECU controlled systems when you have connected the cable of the OBDII scan tool or TOYOTA hand-held tester to DLC3, turned the ignition switch ON and operated the scan tool, there is a problem on the vehicle side or tool side.
  (1) If communication is normal when the tool is connected to another vehicle, inspect the diagnosis data link line (Bus⊕line) or ECU power circuit of the vehicle.
  (2) If communication is still not possible when the tool is connected to another vehicle, the problem is probably in the tool itself, so perform the Self Test procedures outlined in the Tester Operator's Manual.

IN04G-02

HOW TO PROCEED WITH TROUBLESHOOTING

Carry out troubleshooting in accordance with the procedure on the following page. Here, only the basic procedure is shown. Details are provided in the DI section, showing the most effective methods for each circuit. Confirm the troubleshooting procedures first for the relevant circuit before beginning troubleshooting of that circuit.

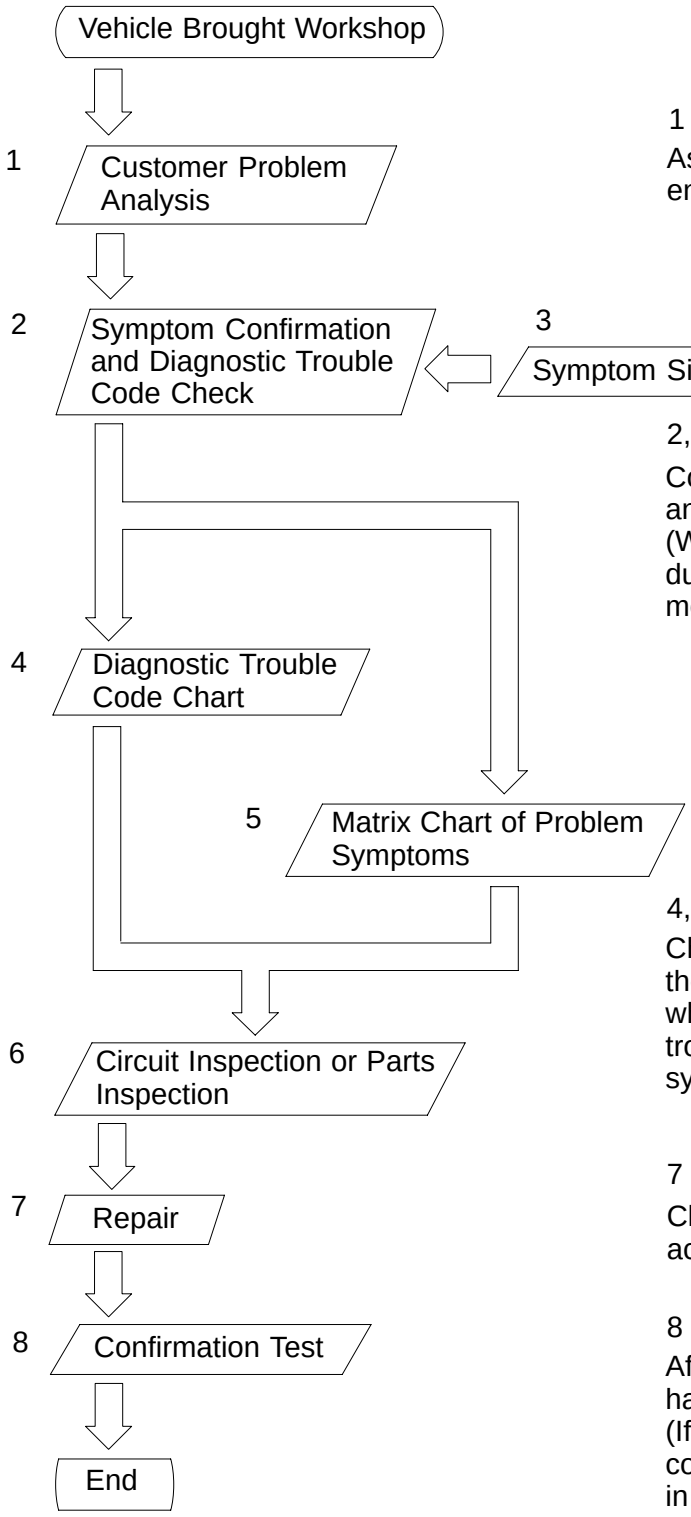

1

Ask the customer about the conditions and the environment when the problem occurred.

2, 3

Confirm the symptoms and the problem conditions, and check the diagnostic trouble codes.
(When the problem symptoms do not appear during confirmation, use the symptom simulation method described later on.)

4, 5, 6

Check the results obtained in Step 2, then confirm the inspection procedure for the system or the part which should be checked using the diagnostic trouble code chart or the matrix chart of problem symptoms.

7

Check and repair the affected system or part in accordance with the instructions in Step 6.

8

After completing repairs, confirm that the problem has been eliminated.
(If the problem is not reproduced, perform the confirmation test under the same conditions and in the same environment as when it occurred for the first time.)

1. CUSTOMER PROBLEM ANALYSIS

In troubleshooting, the problem symptoms must be confirmed accurately and all preconceptions must be cleared away in order to give an accurate judgment. To ascertain just what the problem symptoms are, it is extremely important to ask the customer about the problem and the conditions at the time it occurred.

Important Point in the Problem Analysis:

The following 5 items are important points in the problem analysis. Past problems which are thought to be unrelated and the repair history, etc. may also help in some cases, so as much information as possible should be gathered and its relationship with the problem symptoms should be correctly ascertained for reference in troubleshooting. A customer problem analysis table is provided in the troubleshooting section for each system for your use.

Important Points in the Customer Problem Analysis

- What ----- Vehicle model, system name
- When ----- Date, time, occurrence frequency
- Where ----- Road conditions
- Under what conditions? ----- Running conditions, driving conditions, weather conditions
- How did it happen? ----- Problem symptoms

(Sample) Engine control system check sheet.

CUSTOMER PROBLEM ANALYSIS CHECK

ENGINE CONTROL SYSTEM Check Sheet

Inspector's Name _____

Customer's Name		**Model and Model Year**	
Driver's Name		**Frame No.**	
Data Vehicle Brought in		**Engine Model**	
License No.		**Odometer Reading**	km miles

Problem Symptoms	☐ **Engine does not Start**	☐ **Engine does not crank** ☐ **No initial combustion** ☐ **No complete combustion**
	☐ **Difficult to Start**	☐ **Engine cranks slowly** ☐ **Other** _____
	☐ **Poor Idling**	☐ **Incorrect first idle** ☐ **Idling rpm is abnormal** ☐ **High (rpm)** ☐ **Low (rpm)** ☐ **Rough idling** ☐ **Other** _____
	☐ **Poor Drive ability**	☐ **Hesitation** ☐ **Back fire** ☐ **Muffler explosion (after-fire)** ☐ **Surging** ☐ **Knocking** ☐ **Other** _____
	☐ **Engine Stall**	☐ **Soon after starting** ☐ **After accelerator pedal depressed** ☐ **After accelerator pedal released** ☐ **During A/C operation** ☐ **Shifting from N to D** ☐ **Other** _____
	☐ **Others**	

☐ **Constant** ☐ **Sometimes (times per day/month)**

2. SYMPTOM CONFIRMATION AND DIAGNOSTIC TROUBLE CODE CHECK

The diagnostic system in the TOYOTA SUPRA fulfills various functions. The first function is the Diagnostic Trouble Code Check in which a malfunction in the signal circuits to the ECU is stored in code in the ECU memory at the time of occurrence, to be output by the technician during troubleshooting. Another function is the Input Signal Check which checks if the signals from various switches are sent to the ECU correctly. By using these check functions, the problem areas can be narrowed down quickly and troubleshooting can be performed effectively. Diagnostic functions are incorporated in the following systems in the TOYOTA SUPRA.

System	Diagnostic Trouble Code Check	Input Signal Check (Sensor Check)	Other Diagnosis Function
Engine	○ (with Check Mode)	○	Diagnostic Test Mode
Automatic Transmission	○ (with Check Mode)	○	Diagnostic Test Mode
Anti-Lock Brake System	○	○	
ABS & Traction Control System	○	○	
Supplemental Restraint System	○		
Cruise Control	○	○	
Air Conditioning	○	○	Actuator Check

In diagnostic trouble code check, it is very important to determine whether the problem indicated by the diagnostic trouble code is still occurring or occurred in the past but returned to normal at present. In addition, it must be checked in the problem symptom check whether the malfunction indicated by the diagnostic trouble code is directly related to the problem symptom or not. For this reason, the diagnostic trouble codes should be checked before and after the symptom confirmation to determine the current conditions, as shown in the table below. If this is not done, it may, depending on the case, result in unnecessary troubleshooting for normally operating systems, thus making it more difficult to locate the problem, or in repairs not pertinent to the problem. Therefore, always follow the procedure in correct order and perform the diagnostic trouble code check.

DIAGNOSTIC TROUBLE CODE CHECK PROCEDURE

Diagnostic Trouble Code Check (Make a note of and then clear)	**Confirmation of Symptoms**	**Diagnostic Trouble Code Check**	**Problem Condition**
Diagnostic Trouble Code Display	Problem symptoms exist	Same diagnostic trouble code is displayed	Problem is still occurring in the diagnostic circuit.
⇨		Normal code is displayed	The problem is still occurring in a place other than in the diagnostic circuit. (The diagnostic trouble code displayed first is either for a past problem or it is a secondary problem.)
⇨	No problem symptoms exist		The problem occurred in the diagnostic circuit in the past.
Normal Code Display ⇨	Problem symptoms exist	Normal code is displayed	The problem is still occurring in a place other than in the diagnostic circuit.
⇨	No problem symptoms exist	Normal code is displayed	The problem occurred in a place other than in the diagnostic circuit in the past.

Taking into account the above points, a flow chart showing how to proceed with troubleshooting using the diagnostic trouble code check is shown below. This flow chart shows how to utilize the diagnostic trouble code check effectively, then by carefully checking the results, indicates how to proceed either to diagnostic trouble code troubleshooting or to troubleshooting of problem symptoms.

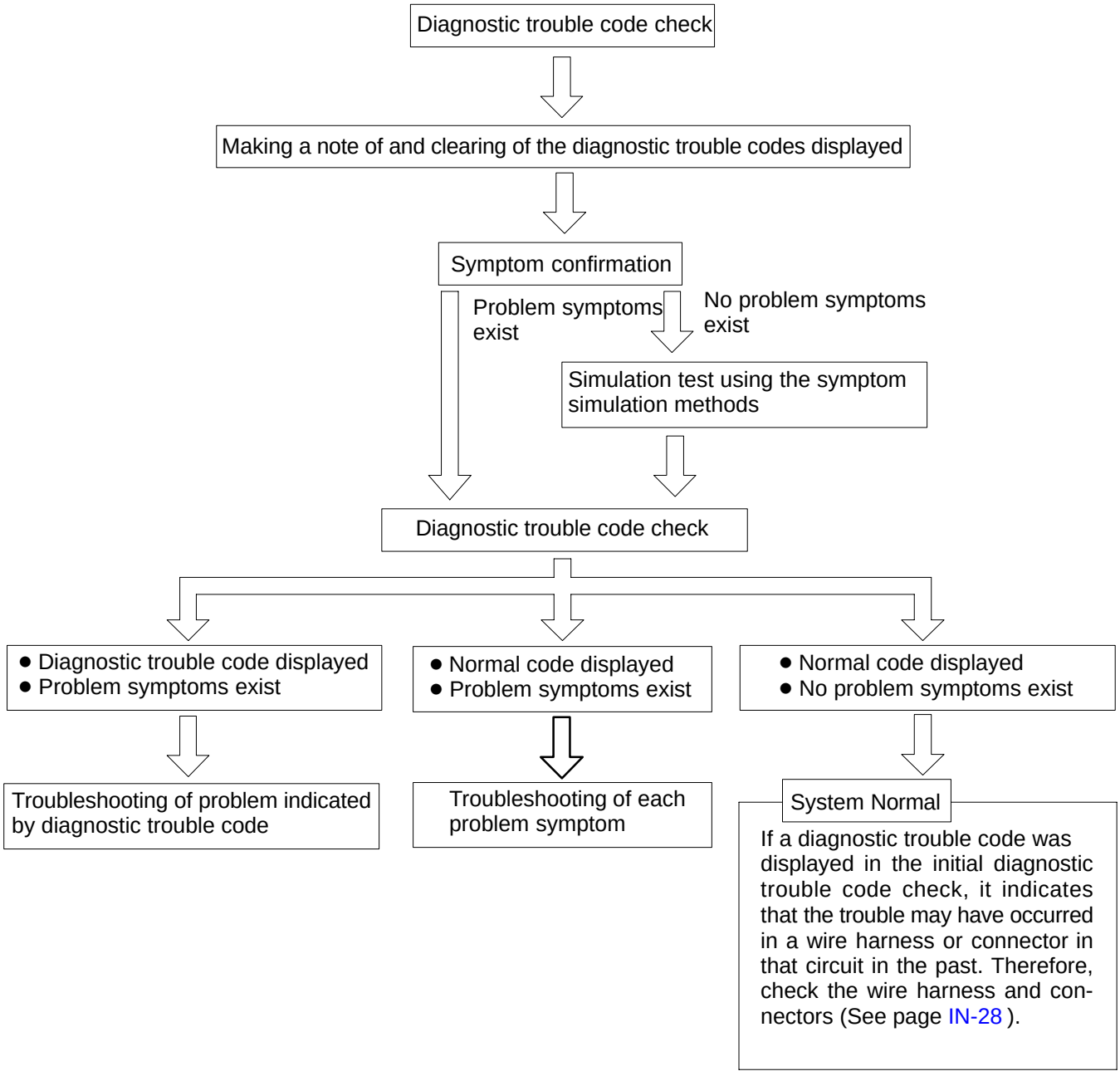

3. SYMPTOM SIMULATION

The most difficult case in troubleshooting is when there are no problem symptoms occurring. In such cases, a thorough customer problem analysis must be carried out, then simulate the same or similar conditions and environment in which the problem occurred in the customer's vehicle. No matter how much experience a technician has, or how skilled he may be, if he proceeds to troubleshoot without confirming the problem symptoms he will tend to overlook something important in the repair operation and make a wrong guess somewhere, which will only lead to a standstill. For example, for a problem which only occurs when the engine is cold, or for a problem which occurs due to vibration caused by the road during driving, etc., the problem can never be determined so long as the symptoms are confirmed with the engine hot condition or the vehicle at a standstill. Since vibration, heat or water penetration (moisture) are likely causes for problems which are difficult to reproduce, the symptom simulation tests introduced here are effective measures in that the external causes are applied to the vehicle in a stopped condition.

Important Points in the Symptom Simulation Test:

In the symptom simulation test, the problem symptoms should of course be confirmed, but the problem area or parts must also be found out. To do this, narrow down the possible problem circuits according to the symptoms before starting this test and connect a tester beforehand. After that, carry out the symptom simulation test, judging whether the circuit being tested is defective or normal and also confirming the problem symptoms at the same time. Refer to the matrix chart of problem symptoms for each system to narrow down the possible causes of the symptom.

1	**VIBRATION METHOD: When vibration seems to be the major cause.**
CONNECTORS Slightly shake the connector vertically and horizontally. **WIRE HARNESS** Slightly shake the wire harness vertically and horizontally. The connector joint, fulcrum of the vibration, and body through portion are the major areas to be checked thoroughly.	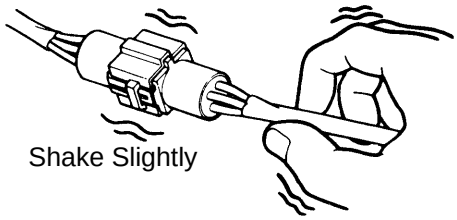 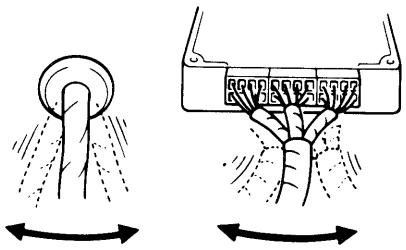 FI2331 FI2332
PARTS AND SENSOR Apply slight vibration with a finger to the part of the sensor considered to be the problem cause and check if the malfunction occurs. HINT: Applying strong vibration to relays may result in open relays.	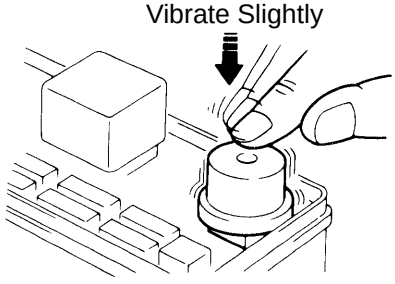 FI2330

V07268

2	**HEAT METHOD: When the problem seems to occur when the suspect area is heated.**

Heat the component that is the likely cause of the malfunction with a hair dryer or similar object. Check to see if the malfunction occurs.

NOTICE:

(1) Do not heat to more than 60 ˚C (140 ˚F). (Temperature is limited not to damage the components.)

(2) Do not apply heat directly to parts in the ECU.

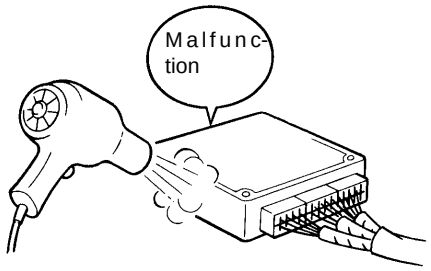

FI2334

3	**WATER SPRINKLING METHOD: When the malfunction seems to occur on a rainy day or in a high-humidity condition.**

Sprinkle water onto the vehicle and check to see if the malfunction occurs.

NOTICE:

(1) Never sprinkle water directly into the engine compartment, but indirectly change the temperature and humidity by applying water spray onto the radiator front surface.

(2) Never apply water directly onto the electronic components.

(Service hint)
If a vehicle is subject to water leakage, the leaked water may contaminate the ECU. When testing a vehicle with a water leakage problem, special caution must be taken.



FI6649

4	**OTHER: When a malfunction seems to occur when electrical load is excessive.**

Turn on all electrical loads including the heater blower, head lights, rear window defogger, etc. and check to see if the malfunction occurs.

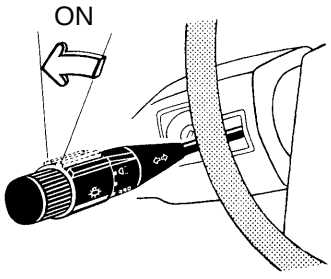

FI2336

V07469

4. DIAGNOSTIC TROUBLE CODE CHART

The inspection procedure is shown in the table below. This table permits efficient and accurate troubleshooting using the diagnostic trouble codes displayed in the diagnostic trouble code check. Proceed with troubleshooting in accordance with the inspection procedure given in the diagnostic chart corresponding to the diagnostic trouble codes displayed. The engine diagnostic trouble code chart is shown below as an example.

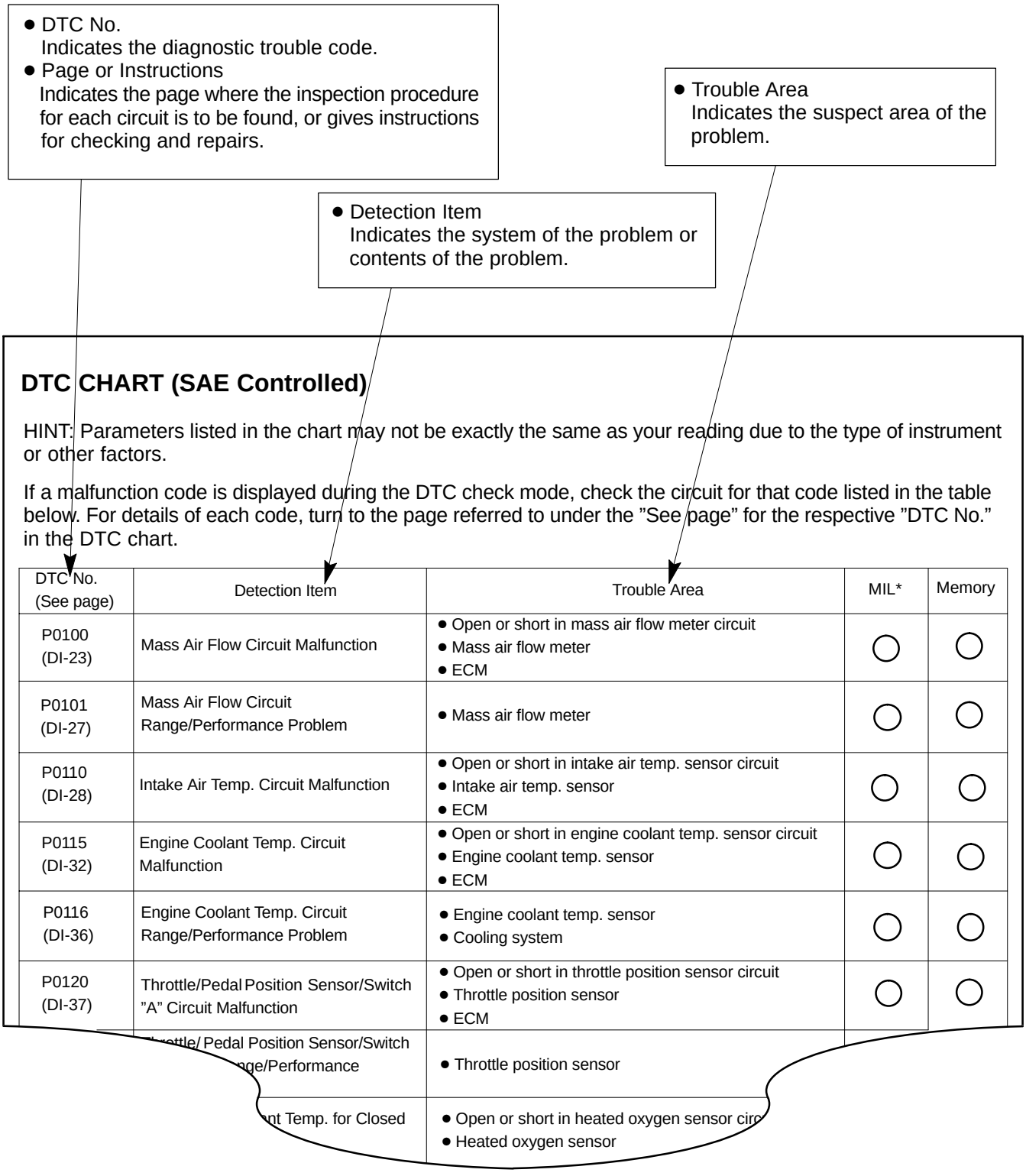

DTC CHART (SAE Controlled)

HINT: Parameters listed in the chart may not be exactly the same as your reading due to the type of instrument or other factors.

If a malfunction code is displayed during the DTC check mode, check the circuit for that code listed in the table below. For details of each code, turn to the page referred to under the "See page" for the respective "DTC No." in the DTC chart.

DTC No. (See page)	Detection Item	Trouble Area	MIL*	Memory
P0100 (DI-23)	Mass Air Flow Circuit Malfunction	● Open or short in mass air flow meter circuit ● Mass air flow meter ● ECM	○	○
P0101 (DI-27)	Mass Air Flow Circuit Range/Performance Problem	● Mass air flow meter	○	○
P0110 (DI-28)	Intake Air Temp. Circuit Malfunction	● Open or short in intake air temp. sensor circuit ● Intake air temp. sensor ● ECM	○	○
P0115 (DI-32)	Engine Coolant Temp. Circuit Malfunction	● Open or short in engine coolant temp. sensor circuit ● Engine coolant temp. sensor ● ECM	○	○
P0116 (DI-36)	Engine Coolant Temp. Circuit Range/Performance Problem	● Engine coolant temp. sensor ● Cooling system	○	○
P0120 (DI-37)	Throttle/Pedal Position Sensor/Switch "A" Circuit Malfunction	● Open or short in throttle position sensor circuit ● Throttle position sensor ● ECM	○	○
	ttle/ Pedal Position Sensor/Switch nge/Performance	● Throttle position sensor		
	nt Temp. for Closed	● Open or short in heated oxygen sensor circ ● Heated oxygen sensor		

5. PROBLEM SYMPTOMS TABLE

The suspect circuits or parts for each problem symptom are shown in the table below. Use this table to troubleshooting the problem when a ”Normal” code is displayed in the diagnostic trouble code check but the problem is still occurring. Numbers in the table indicate the inspection order in which the circuits or parts should be checked.

HINT:

When the problem is not detected by the diagnostic system even though the problem symptom is present, it is considered that the problem is occurring outside the detection range of the diagnostic system, or that the problem is occurring in a system other than the diagnostic system.

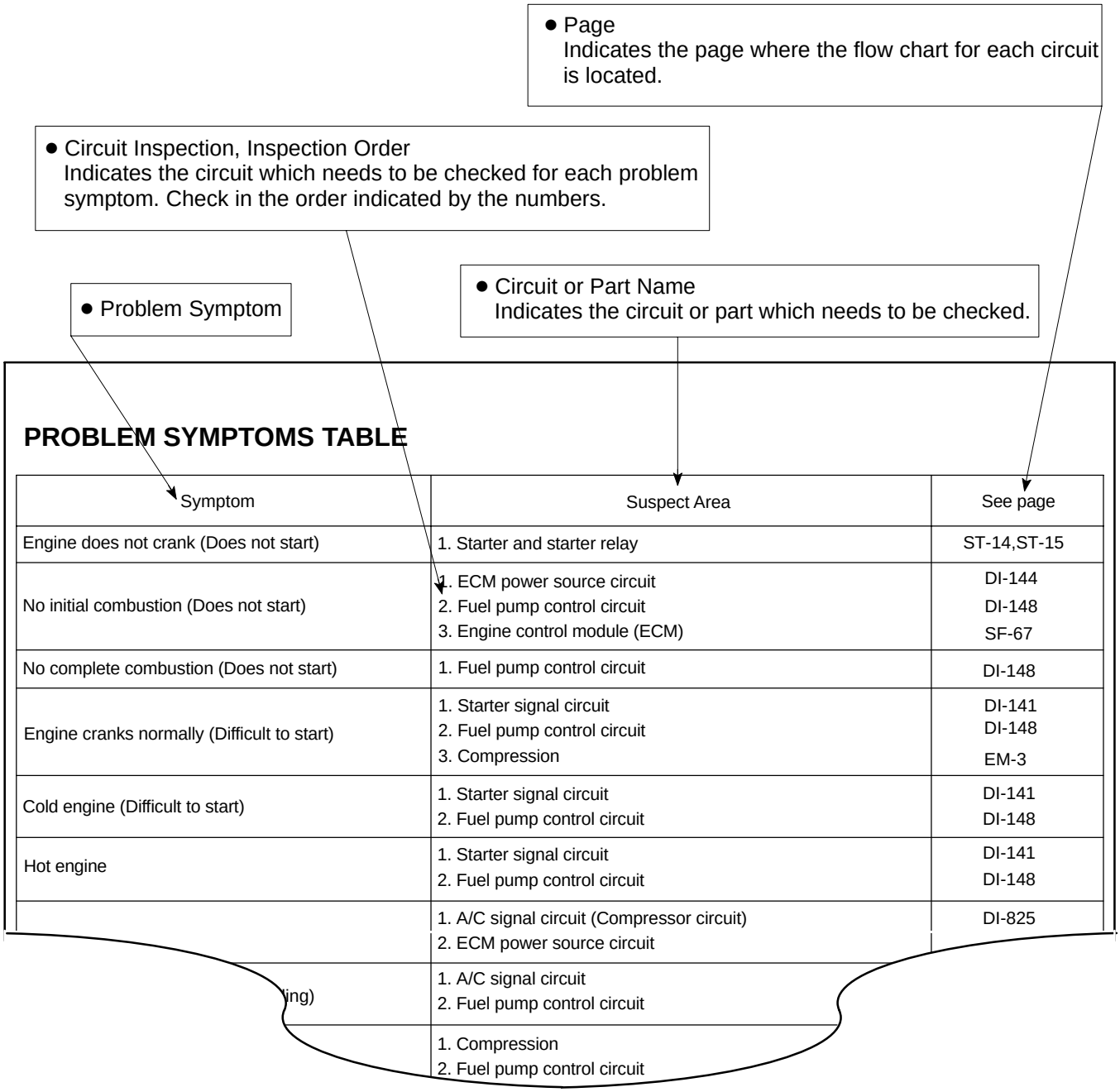

PROBLEM SYMPTOMS TABLE

Symptom	Suspect Area	See page
Engine does not crank (Does not start)	1. Starter and starter relay	ST-14,ST-15
No initial combustion (Does not start)	1. ECM power source circuit 2. Fuel pump control circuit 3. Engine control module (ECM)	DI-144 DI-148 SF-67
No complete combustion (Does not start)	1. Fuel pump control circuit	DI-148
Engine cranks normally (Difficult to start)	1. Starter signal circuit 2. Fuel pump control circuit 3. Compression	DI-141 DI-148 EM-3
Cold engine (Difficult to start)	1. Starter signal circuit 2. Fuel pump control circuit	DI-141 DI-148
Hot engine	1. Starter signal circuit 2. Fuel pump control circuit	DI-141 DI-148
	1. A/C signal circuit (Compressor circuit) 2. ECM power source circuit	DI-825
ling)	1. A/C signal circuit 2. Fuel pump control circuit	
	1. Compression 2. Fuel pump control circuit	

6. CIRCUIT INSPECTION

How to read and use each page is shown below.

● Diagnostic Trouble Code No. and Detection Item

● Circuit Description
The major role and operation, etc. of the circuit and its component parts are explained.

DTC	P0325	Knock Sensor 1 Circuit Malfunction

CIRCUIT DESCRIPTION

Knock sensor is fitted to the cylinder block to detect engine knocking. This sensor contains a piezoelectric element which generates a voltage when it becomes deformed, which occurs when the cylinder block vibrates due to knocking. If engine knocking occurs, ignition timing is retarded to suppress it.

DTC No.	DTC Detecting Condition	Trouble Area
P0325	No knock sensor 1 signal to ECM with engine speed, 1,200 rpm or more.	● Open or short in knock sensor1 circuit ● Knock sensor 1 (looseness) ● ECM

If the ECM detects the above diagnosis conditions, it operates the fail safe function in which the corrective retard angle value is set to the maximum value.

● Indicates the diagnostic trouble code, diagnostic trouble code set parameter and suspect area of the problem.

WIRING DIAGRAM

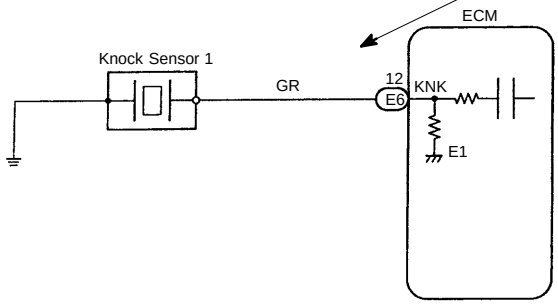

● Wiring Diagram
This shows a wring diagram of the circuit.
Use the diagram together with ELECTRICAL WIRING DIAGRAM to thoroughly understand the circuit.
Wiring colors are indicated by an alphabetical code.
B = Black, L = Blue, R = Red, BR = Brown,
LG = Light Green, V = Violet, G = Green,
O = Orange, W = White, GR = Gray, P = Pink,
Y = Yellow
The first letter indicates the basic wire color and the second letter indicates the color of the stripe.

V08423

● Indicates the position of the ignition switch during the check.

LOCK
Ignition Switch LOCK (OFF)

ON
Ignition Switch ON

START
Ignition Switch START

ACC
Ignition Switch ACC

● Inspection Procedure
Use the inspection procedure to determine if the circuit is normal or abnormal, and, if it is abnormal, use it to determine whether the problem is located in the sensors, actuators, wire harness or ECU.

INSPECTION PROCEDURE

1	**Check continuity between terminal KNK of ECM connector and body ground.**

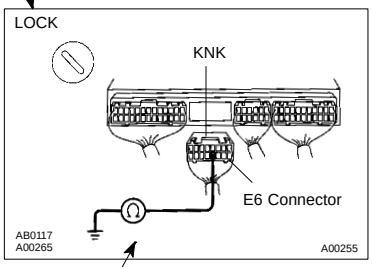

PREPARATION:
(a) Remove the glove compartment.
(b) Disconnect the E6 connector of ECM.

CHECK:
Measure resistance between terminal KNK of ECM connector and body ground.

OK:
Resistance: 1 MΩ or higher

OK	**Go to step 3.**

NG

2	**Check knock sensor (See page SF-67).**

OK	**Replace knock sensor.**

● Indicates the place to check the voltage or resistance.
● Indicates the connector position to checked, from the front or back side.

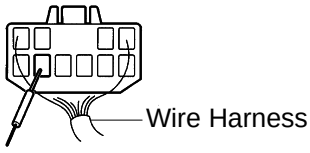

Check from the connector back side. (with harness)



Check from the connector front side. (without harness)
In this case, care must be taken not to bend the terminals.

● Indicates the condition of the connector of ECU during the check.

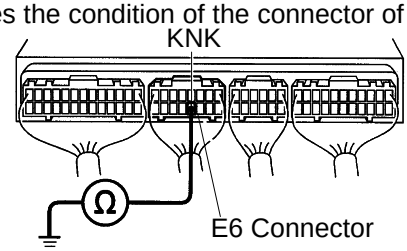

Connector being checked is connected.

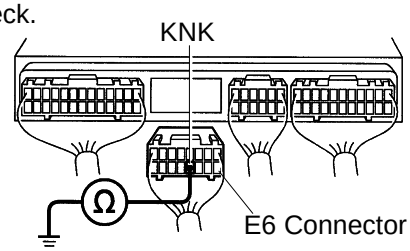

Connector being checked is disconnected.

V08425

IN04H-01

HOW TO USE THE DIAGNOSTIC CHART AND INSPECTION PROCEDURE

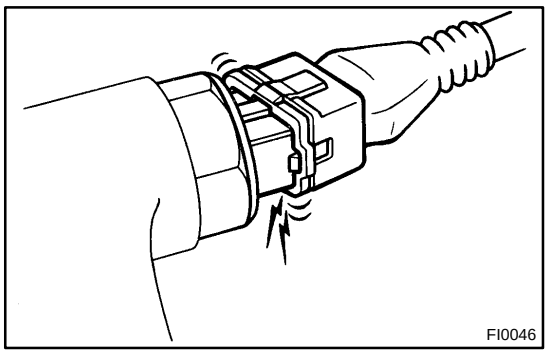
FI0046

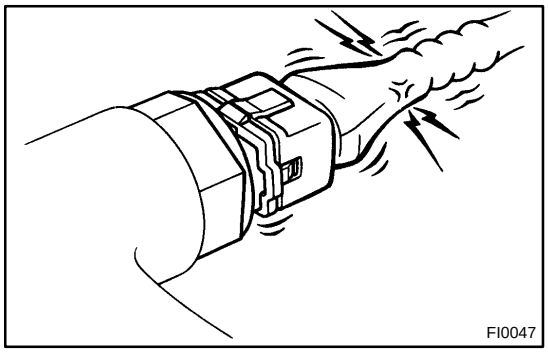
FI0047

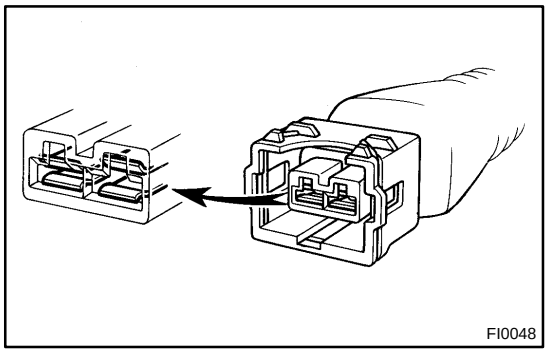
FI0048

1. CONNECTOR CONNECTION AND TERMINAL INSPECTION

- For troubleshooting, diagnostic trouble code charts or problem symptom charts are provided for each circuit with detailed inspection procedures on the following pages.
- When all the component parts, wire harnesses and connectors of each circuit except the ECU are found to be normal in troubleshooting, then it is determined that the problem is in the ECU. Accordingly, if diagnosis is performed without the problem symptoms occurring, refer to step 8 to replace the ECU, even if the problem is not in the ECU. So always confirm that the problem symptoms are occurring, or proceed with inspection while using the symptom simulation method.
- The instructions ”Check wire harness and connector” and ”Check and replace ECU” which appear in the inspection procedure, are common and applicable to all diagnostic trouble codes. Follow the procedure outlined below whenever these instructions appear.

OPEN CIRCUIT:

This could be due to a disconnected wire harness, faulty contact in the connector, a connector terminal pulled out, etc.

HINT:

- It is rarely the case that a wire is broken in the middle of it. Most cases occur at the connector. In particular, carefully check the connectors of sensors and actuators.
- Faulty contact could be due to rusting of the connector terminals, to foreign materials entering terminals or a drop in the contact pressure between the male and female terminals of the connector. Simply disconnecting and reconnecting the connectors once changes the condition of the connection and may result in a return to normal operation. Therefore, in troubleshooting, if no abnormality is found in the wire harness and connector check, but the problem disappears after the check, then the cause is considered to be in the wire harness or connectors.

SHORT CIRCUIT:

This could be due to a short circuit between the wire harness and the body ground or to a short inside the switch etc.

HINT:

When there is a short between the wire harness and body ground, check thoroughly whether the wire harness is caught in the body or is clamped properly.

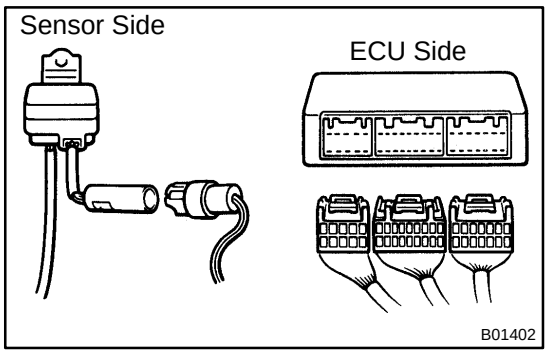

2. CONTINUITY CHECK (OPEN CIRCUIT CHECK)

(a) Disconnect the connectors at both ECU and sensor sides.

(b) Measure the resistance between the applicable terminals of the connectors.

Resistance: 1 Ω or less

HINT:

- Measure the resistance while lightly shaking the wire harness vertically and horizontally.

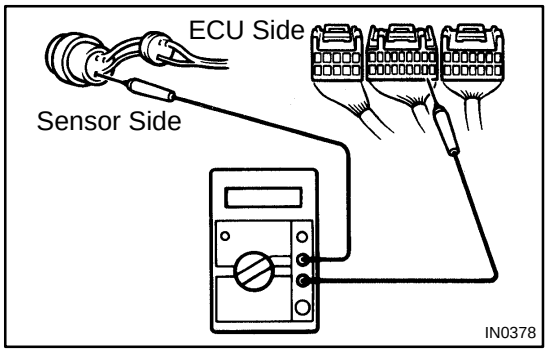

- When tester probes are inserted into a connector, insert the probes from the back. For waterproof connectors in which the probes cannot be inserted from the back, be careful not to bend the terminals when inserting the tester probes.

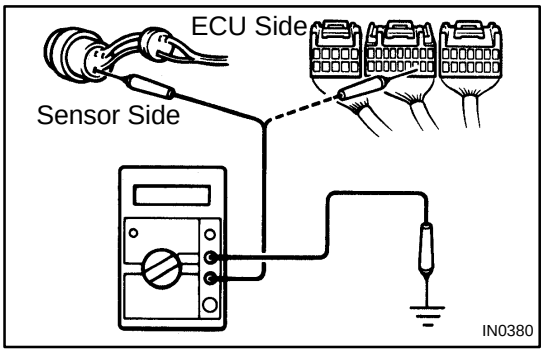

3. RESISTANCE CHECK (SHORT CIRCUIT CHECK)

(a) Disconnect the connectors at both ends.

(b) Measure the resistance between the applicable terminals of the connectors and body ground. Be sure to carry out this check on the connectors on both ends.

Resistance: 1 MΩ or higher

HINT:

Measure the resistance while lightly shaking the wire harness vertically and horizontally.

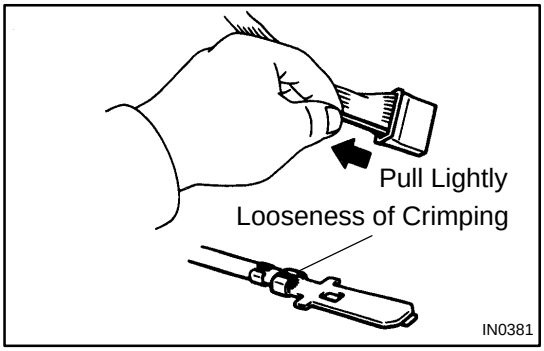

4. VISUAL CHECK AND CONTACT PRESSURE CHECK

(a) Disconnect the connectors at both ends.

(b) Check for rust or foreign material, etc. in the terminals of the connectors.

(c) Check crimped portions for looseness or damage and check if the terminals are secured in lock portion.

HINT:

The terminals should not come out when pulled lightly.

(d) Prepare a test male terminal and insert it in the female terminal, then pull it out.

NOTICE:

When testing a gold-plated female terminal, always use a gold-plated male terminal.

HINT:

When the test terminal is pulled out more easily than others, there may be poor contact in that section.

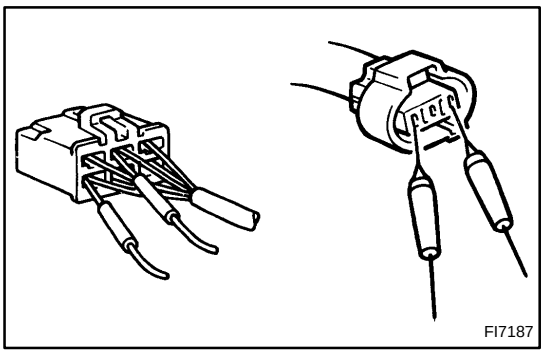

5. CONNECTOR HANDLING

When inserting tester probes into a connector, insert them from the rear of the connector. When necessary, use mini test leads. For water resistant connectors which cannot be accessed from behind, take good care not to deform the connector terminals.

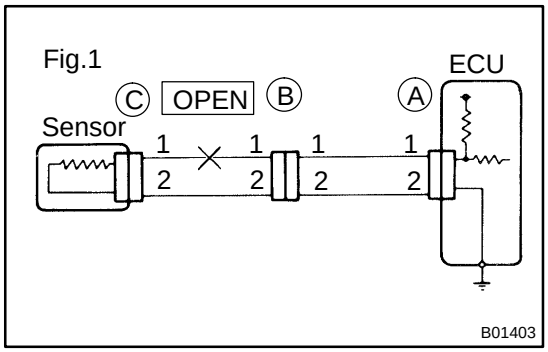

6. CHECK OPEN CIRCUIT

For the open circuit in the wire harness in Fig.1, perform "(a) Continuity Check" or "(b) Voltage Check" to locate the section.

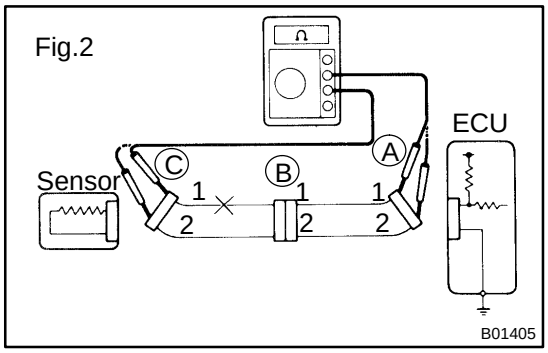

(a) Check the continuity.

(1) Disconnect connectors "A" and "C" and measure the resistance between them.
In the case of Fig.2,
Between terminal 1 of connector "A" and terminal 1 of connector "C" → No continuity (open)
Between terminal 2 of connector "A" and terminal 2 of connector "C" → Continuity
Therefore, it is found out that there is an open circuit between terminal 1 of connector "A" and terminal 1 of connector "C".

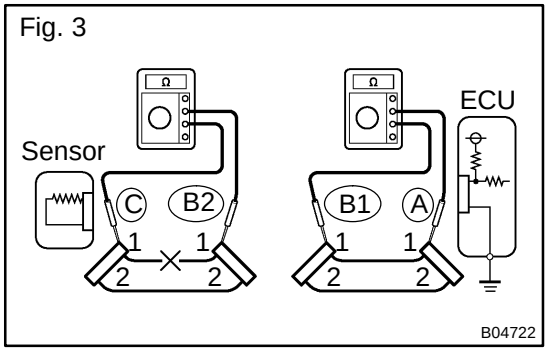

(2) Disconnect connector "B" and measure the resistance between the connectors.
In the case of Fig.3,
Between terminal 1 of connector "A" and terminal 1 of connector "B1" → Continuity
Between terminal 1 of connector "B2" and terminal 1 of connector "C" → No continuity (open)
Therefore, it is found out that there is an open circuit between terminal 1 of connector "B2" and terminal 1 of connector "C".

Fig.4

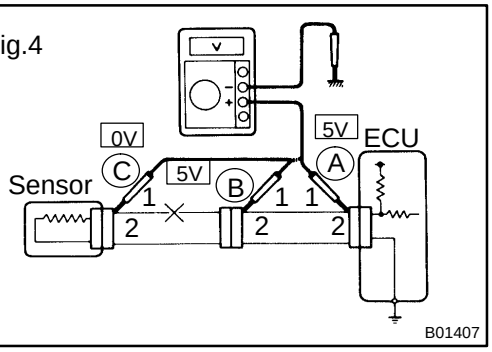

(b) Check the voltage.

In a circuit in which voltage is applied (to the ECU connector terminal), an open circuit can be checked for by conducting a voltage check.

(1) As shown in Fig.4, with each connector still connected, measure the voltage between body ground and terminal 1 of connector "A" at the ECU 5V output terminal, terminal 1 of connector "B", and terminal 1 of connector "C", in that order.

If the results are:

5V: Between Terminal 1 of connector "A" and Body Ground

5V: Between Terminal 1 of connector "B" and Body Ground

0V: Between Terminal 1 of connector "C" and Body Ground

Then it is found out that there is an open circuit in the wire harness between terminal 1 of "B" and terminal 1 of "C".

Fig.5

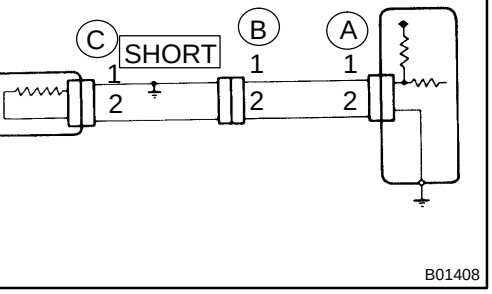

7. CHECK SHORT CIRCUIT

If the wire harness is ground shorted as in Fig.5, locate the section by conducting a "continuity check with ground ".

Fig.6

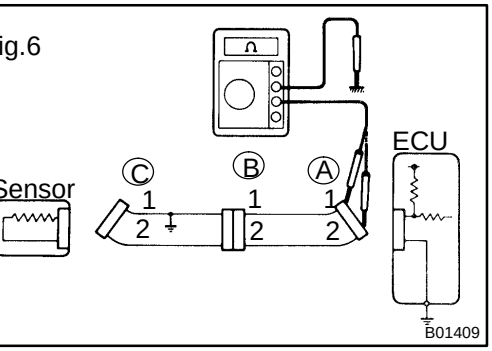

(a) Check the continuity with ground.

(1) Disconnect connectors "A" and "C" and measure the resistance between terminal 1 and 2 of connector "A" and body ground.

In the case of Fig.6,

Between terminal 1 of connector "A" and body ground → Continuity (short)

Between terminal 2 of connector "A" and body ground → No continuity

Therefore, it is found out that there is a short circuit between terminal 1 of connector "A" and terminal 1 of connector "C".

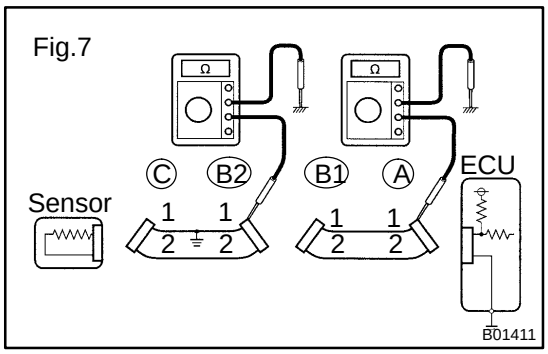

(2) Disconnect connector "B" and measure the resistance between terminal 1 of connector "A" and body ground, and terminal 1 of connector "B2" and body ground.
Between terminal 1 of connector "A" and body ground → No continuity
Between terminal 1 of connector "B2" and body ground → Continuity (short)
Therefore, it is found out that there is a short circuit between terminal 1 of connector "B2" and terminal 1 of connector "C".

8. CHECK AND REPLACE ECU

First check the ECU ground circuit. If it is faulty, repair it. If it is normal, the ECU could be faulty, so replace the ECU with a known good one and check if the symptoms appear.

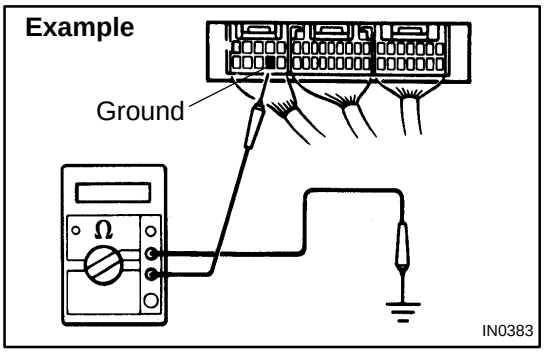

(a) Measure the resistance between the ECU ground terminal and the body ground.
Resistance: 1 Ω or less

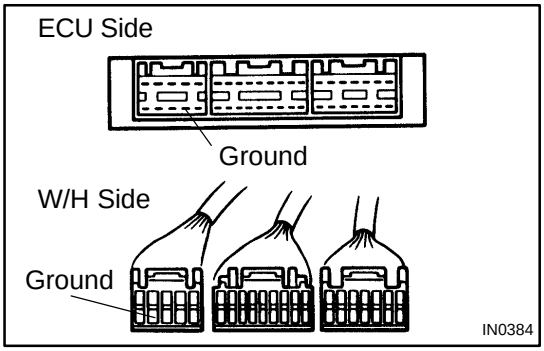

(b) Disconnect the ECU connector, check the ground terminals on the ECU side and the wire harness side for bend and check the contact pressure.

TERMS

IN04I-01

ABBREVIATIONS USED IN THIS MANUAL

Abbreviations	Meaning
ABS	Anti-Lock Brake System
ALR	Automatic Locking Retractor
APPROX.	Approximately
A/T, ATM	Automatic Transmission
ATF	Automatic Transmission Fluid
BTDC	Before Top Dead Center
CB	Circuit Breaker
CD	Compact Disc
CRS	Child Restraint System
DOHC	Double Over Head Cam
DP	Dash Pot
ECU	Electronic Control Unit
ELR	Emergency Locking Retractor
ESA	Electronic Spark Advance
EX	Exhaust (Manifold, Valve)
FIPG	Formed in Place Gasket
FL	Fusible Link
Fr	Front
H-Fuse	High Current Fuse
IG	Ignition
IN	Intake (Manifold, Valve)
J/B	Junction Block
LED	Light Emitting Diode
LH	Left-Hand
LLC	Long Life Coolant (Year Around Coolant)
LSD	Limited Slip Differential
Max.	Maximum
Min.	Minimum
MP	Multipurpose
M/T	Manual Transmission
O/D, OD	Overdrive
O/S	Oversize
P&BV	Proportioning and Bypass Valve
PCV	Positive Crankcase Ventilation
PPS	Progressive Power Steering
PS	Power Steering
RH	Right-Hand
Rr	Rear
SRS	Supplemental Restraint System
SSM	Special Service Materials
SST	Special Service Tools
STD	Standard

SW	Switch
TDC	Top Dead center
TEMP.	Temperature
TRAC	Traction Control System
U/S	Undersize
VCV	Vacuum Control Valve
VSV	Vacuum Switching Valve
VTV	Vacuum Transmitting Valve
w/	With
w/o	Without

IN04J-01

GLOSSARY OF SAE AND TOYOTA TERMS

This glossary lists all SAE-J1930 terms and abbreviations used in this manual in compliance with SAE recommendations, as well as their Toyota equivalents.

SAE ABBREVIATIONS	SAE TERMS	TOYOTA TERMS ( )--ABBREVIATIONS
A/C	Air Conditioning	Air Conditioner
ACL	Air Cleaner	Air Cleaner
AIR	Secondary Air Injection	Air Injection (AI)
AP	Accelerator Pedal	-
B+	Battery Positive Voltage	+B, Battery Voltage
BARO	Barometric Pressure	-
CAC	Charge Air Cooler	Intercooler
CARB	Carburetor	Carburetor
CFI	Continuous Fuel Injection	-
CKP	Crankshaft Position	Crank Angle
CL	Closed Loop	Closed Loop
CMP	Camshaft Position	Cam Angle
CPP	Clutch Pedal Position	-
CTOX	Continuous Trap Oxidizer	-
CTP	Closed Throttle Position	-
DFI	Direct Fuel Injection (Diesel)	Direct Injection (DI)
DI	Distributor Ignition	-
DLC1 DLC2 DLC3	Data Link Connector 1 Data Link Connector 2 Data Link Connector 3	1: Check Connector 2: Total Diagnosis Comunication Link (TDCL) 3: OBD II Diagnostic Connector
DTC	Diagnostic Trouble Code	Diagnostic Code
DTM	Diagnostic Test Mode	-
ECL	Engine Control Level	-
ECM	Engine Control Module	Engine ECU (Electronic Control Unit)
ECT	Engine Coolant Temperature	Coolant Temperature, Water Temperature (THW)
EEPROM	Electrically Erasable Programmable Read Only Memory	Electrically Erasable Programmable Read Only Memory (EEPROM), Erasable Programmable Read Only Memory (EPROM)
EFE	Early Fuel Evaporation	Cold Mixture Heater (CMH), Heat Control Valve (HCV)
EGR	Exhaust Gas Recirculation	Exhaust Gas Recirculation (EGR)
EI	Electronic Ignition	Distributorless Ignition (DI)
EM	Engine Modification	Engine Modification (EM)
EPROM	Erasable Programmable Read Only Memory	Programmable Read Only Memory (PROM)
EVAP	Evaporative Emission	Evaporative Emission Control (EVAP)
FC	Fan Control	-
FEEPROM	Flash Electrically Erasable Programmable Read Only Memory	-
FEPROM	Flash Erasable Programmable Read Only Memory	-
FF	Flexible Fuel	-
FP	Fuel Pump	Fuel Pump
GEN	Generator	Alternator
GND	Ground	Ground (GND)

HO2S	Heated Oxygen Sensor	Heated Oxygen Sensor (HO2S)
IAC	Idle Air Control	Idle Speed Control (ISC)
IAT	Intake Air Temperature	Intake or Inlet Air Temperature
ICM	Ignition Control Module	-
IFI	Indirect Fuel Injection	Indirect Injection
IFS	Inertia Fuel-Shutoff	-
ISC	Idle Speed Control	-
KS	Knock Sensor	Knock Sensor
MAF	Mass Air Flow	Air Flow Meter
MAP	Manifold Absolute Pressure	Manifold Pressure Intake Vacuum
MC	Mixture Control	Electric Bleed Air Control Valve (EBCV) Mixture Control Valve (MCV) Electric Air Control Valve (EACV)
MDP	Manifold Differential Pressure	-
MFI	Multiport Fuel Injection	Electronic Fuel Injection (EFI)
MIL	Malfunction Indicator Lamp	Check Engine Light
MST	Manifold Surface Temperature	-
MVZ	Manifold Vacuum Zone	-
NVRAM	Non-Volatile Random Access Memory	-
O2S	Oxygen Sensor	Oxygen Sensor, O_2 Sensor (O_2S)
OBD	On-Board Diagnostic	On-Board Diagnostic (OBD)
OC	Oxidation Catalytic Converter	Oxidation Catalyst Converter (OC), CCo
OP	Open Loop	Open Loop
PAIR	Pulsed Secondary Air Injection	Air Suction (AS)
PCM	Powertrain Control Module	-
PNP	Park/Neutral Position	-
PROM	Programmable Read Only Memory	-
PSP	Power Steering Pressure	-
PTOX	Periodic Trap Oxidizer	Diesel Particulate Filter (DPF) Diesel Particulate Trap (DPT)
RAM	Random Access Memory	Random Access Memory (RAM)
RM	Relay Module	-
ROM	Read Only Memory	Read Only Memory (ROM)
RPM	Engine Speed	Engine Speed
SC	Supercharger	Supercharger
SCB	Supercharger Bypass	-
SFI	Sequential Multiport Fuel Injection	Electronic Fuel Injection (EFI), Sequential Injection
SPL	Smoke Puff Limiter	-
SRI	Service Reminder Indicator	-
SRT	System Readiness Test	-
ST	Scan Tool	-
TB	Throttle Body	Throttle Body
TBI	Throttle Body Fuel Injection	Single Point Injection Central Fuel Injection (Ci)
TC	Turbocharger	Turbocharger
TCC	Torque Converter Clutch	Torque Converter

TCM	Transmission Control Module	Transmission ECU (Electronic Control Unit)
TP	Throttle Position	Throttle Position
TR	Transmission Range	-
TVV	Thermal Vacuum Valve	Bimetallic Vacuum Switching Valve (BVSV) Thermostatic Vacuum Switching Valve (TVSV)
TWC	Three-Way Catalytic Converter	Three-Way Catalytic (TWC) CC_{RO}
TWC+OC	Three-Way + Oxidation Catalytic Converter	CC_R + CCo
VAF	Volume Air Flow	Air Flow Meter
VR	Voltage Regulator	Voltage Regulator
VSS	Vehicle Speed Sensor	Vehicle Speed Sensor (Read Switch Type)
WOT	Wide Open Throttle	Full Throttle
WU-OC	Warm Up Oxidation Catalytic Converter	-
WU-TWC	Warm Up Three-Way Catalytic Converter	Manifold Converter
3GR	Third Gear	-
4GR	Fourth Gear	-

BODY

1. Impact Absorbing Structure

◀ Reinforcement to the bottom of the front pillar, reinforcements and gussets to the bottom of the center pillar, and gussets connecting the lower part of the center pillar and the center floor cross members, have been newly adopted to realize and even excellent body rigidity.

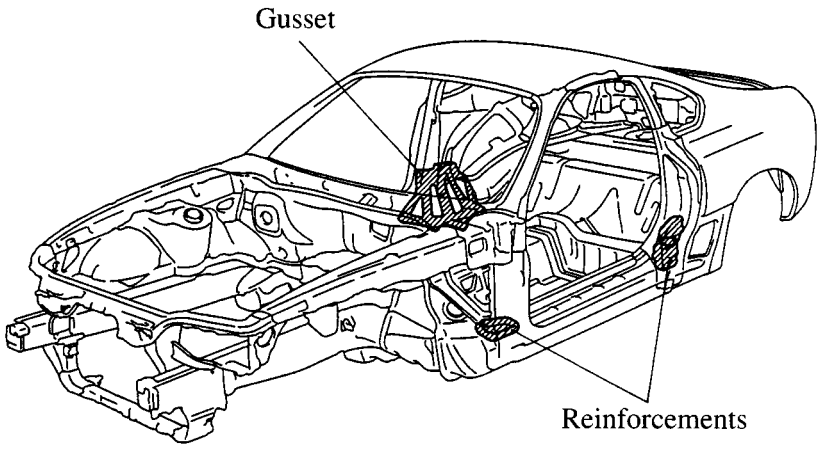

◀ An energy absorbing pads are provided at the upper shoulder and lower arm areas of the door trim to ensure a high level of energy absorbent for side collisions.

: Energy Absorbing Pad

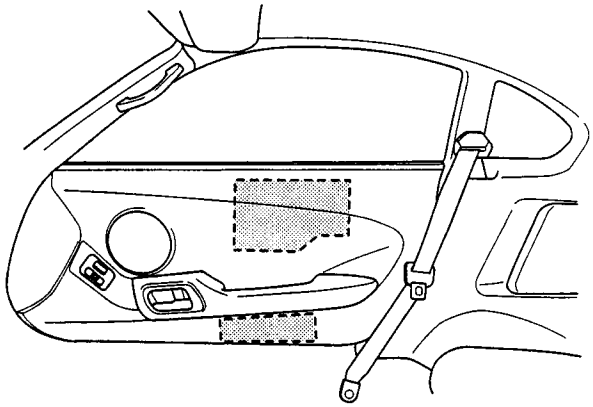

2. Sound Absorbing Materials

◀Seal material has been newly provided to the bottom of the front pillar, and a quarter service hole cover has been newly provided to the quarter portion in order to reduce road noise while driving.

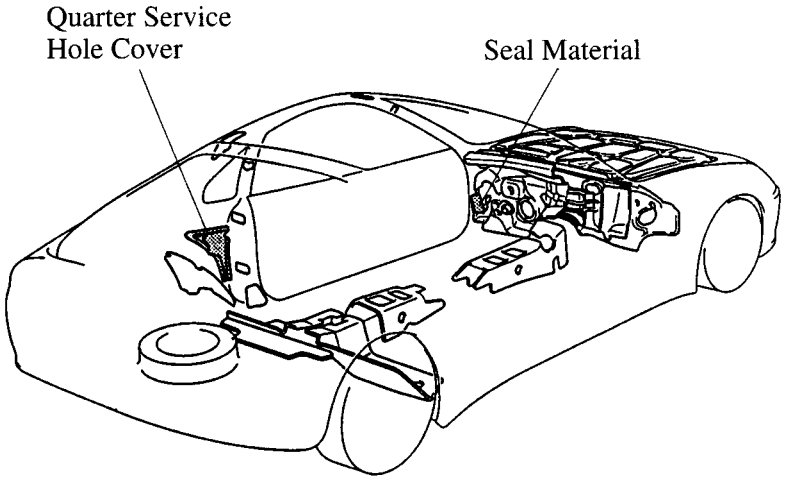

◀The material of sound absorbing material used in the roof side inner garnish, quarter trim, deck side trim and deck rear trim has been changed to reduce road noise.

: Sound Absorbing Material

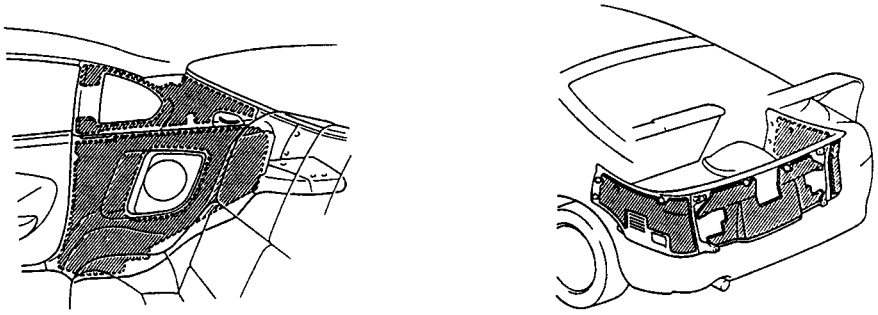

CRUISE CONTROL SYSTEM

1. Actuator

The ’97 Supra has adopted a new motor type actuator that is both lightweight and simple in construction.

The basic construction and operation of this actuator are the same as in the ’96 4Runner with 5VZ–FE engine.

For details, see the 1996 4Runner New Car Features (Pub. No. NCF126U), page 71.

2. Cruise Control ECU

Manual Cancel Function

The manual cancel function, which cancels the cruise control when the parking brake is operated, has been discontinued.

3. Sound Absorbing Materials

◀Seal material has been newly provided to the bottom of the front pillar, and a quarter service hole cover has been newly provided to the quarter portion in order to reduce road noise while driving.

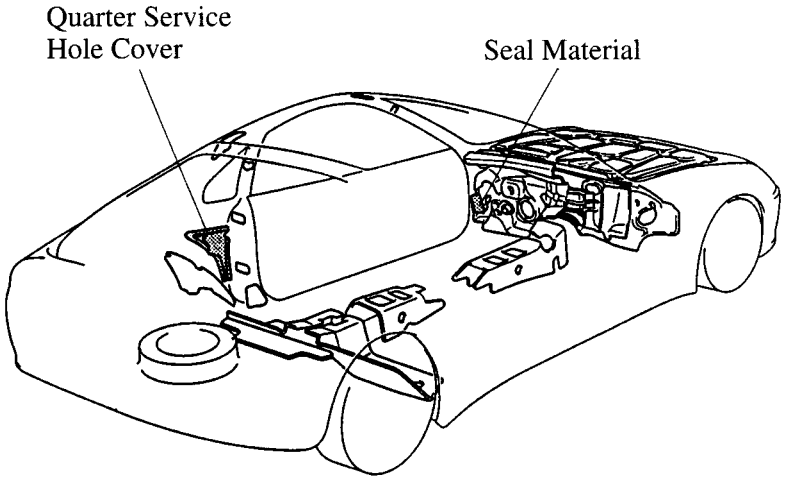

◀The material of sound absorbing material used in the roof side inner garnish, quarter trim, deck side trim and deck rear trim has been changed to reduce road noise.

: Sound Absorbing Material

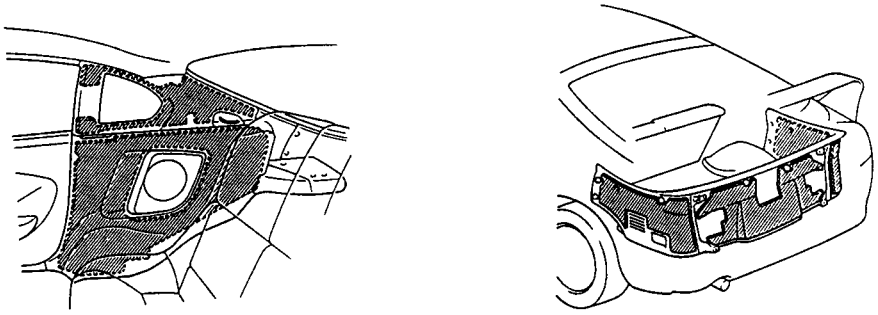

CRUISE CONTROL SYSTEM

1. Actuator

The ’97 Supra has adopted a new motor type actuator that is both lightweight and simple in construction.

The basic construction and operation of this actuator are the same as in the ’96 4Runner with 5VZ–FE engine.

For details, see the 1996 4Runner New Car Features (Pub. No. NCF126U), page 71.

2. Cruise Control ECU

Manual Cancel Function

The manual cancel function, which cancels the cruise control when the parking brake is operated, has been discontinued.

DIFFERENTIAL

1. General

A differential gear ratio has been changed on the 2JZ–GE engine model.

A Helical gear type torque–sensing LSD (Limited Slip Differential) is available as an option on the SJZ–GE engine model and 2JZ–GTE engine with automatic transmission model.

As in the ’96 model, a worm gear type torque–sensing LSD is used on the model with the SJZ–GTE engine and manual transmission.

Specifications◀

Model		’97 Model				’96 Model			
Engine Type		2JZ–GE		2JZ–GTE		2JZ–GE		2JZ–GTE	
Transmission Type / Item		Manual	Automatic	Manual	Automatic	Manual	Automatic	Manual	Automatic
Differential Gear Ratio		4.803	←	3.133	3.769	4.272	←	3.133	3.769
No. of Teeth	Drive Pinion	12	←	15	13	11	←	15	13
	Ring Gear	49	←	47	49	47	←	47	49
Ring Gear Size mm (in.)		205 (8.07)	←	222 (8.74)	205 (8.07)	←	←	222 (8.74)	205 (8.07)
No. of Differential Pinion		2,8*1, 3	←	6*2	2,8*1, 3	2,6*2, 3	←	6*2	←

*1 : Models with Helical Gear Type Torque–Sensing LSD

*2 : Models with Worm Gear Type Torque–Sensing LSD

*3 : Option

2. Helical Gear Type Torque–Sensing LSD

Characteristics

Good traction of high bias ratio design is obtained through the utilization of two types of friction: One is the friction that is generated between the planet gear’s tooth tips and the differential case’s inner wall. The other is the friction that is generated between the side gear end face and the thrust washer.

Quick response and minimum time lag until differential limiting force is generated.

The bias ratio sustains minimal changes due to aging and maintains a stable performance.

A simple, compact, and lightweight differential configuration has been achieved through the use of the helical gear.

Ordinary differential oil must be used; do not use special LSD oil.

Construction

The helical gear type torque–sensing LSD consists of a differential case, 9 planet gears, 2 side gears and 4 thrust washers.

Planet gears mesh with one another as a pair, and each gear of the pair meshes with the side gear on its right or left side.

The planet gears are supported by the hole that is provided in the differential case. They are constructed so that they revolve while rotating over the side gear.

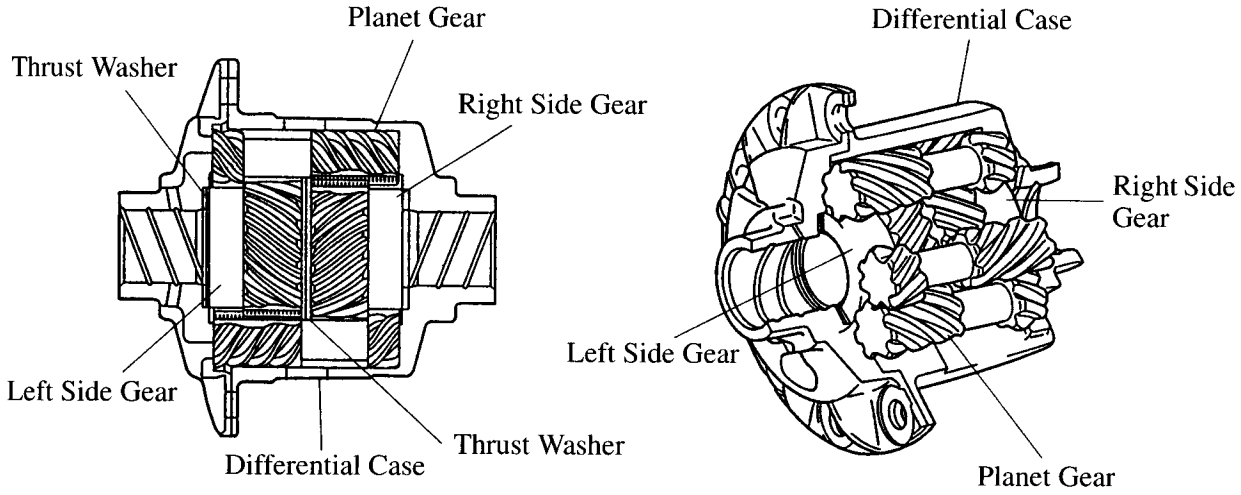

Operation

1) Straight–Ahead Operation

Since side gears (left and right) and planet gears are rotating together with the differential case as a unit when the vehicle is running straight–forward, the driving force is transmitted from the ring gear to the differential case, planet gears and side gears.

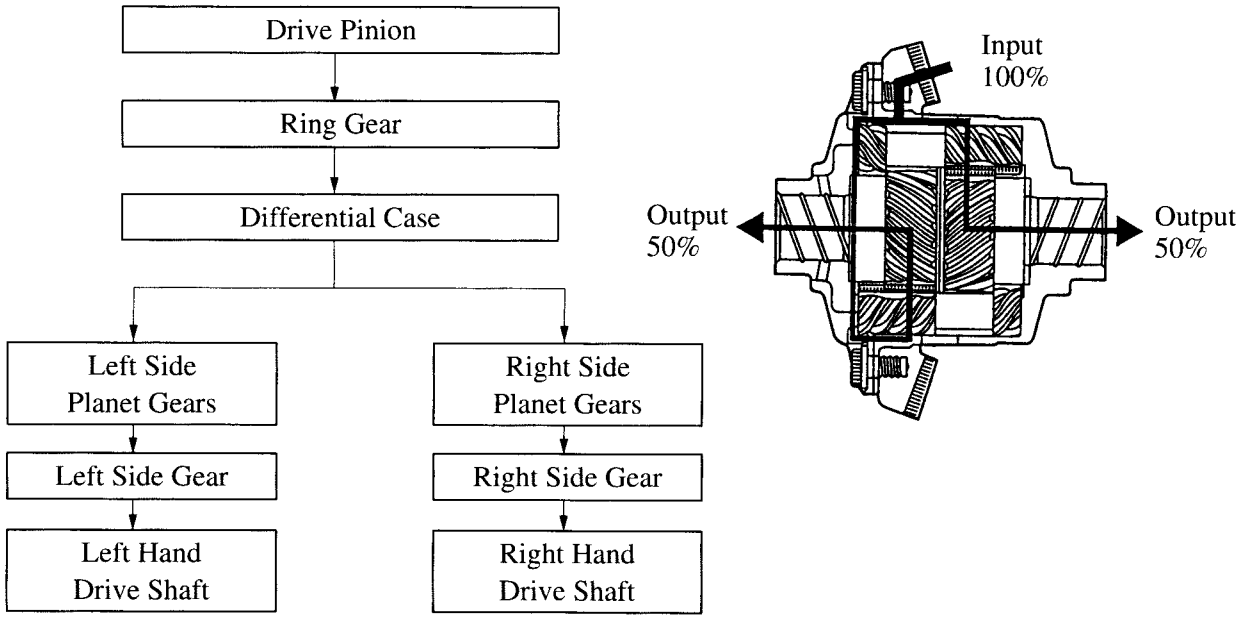

2) Cornering

Supposing that the differential case is not moving, rotating the left side gear counterclockwise, causes planet gear A (which meshes with the left side gear) to rotate clockwise.

Furthermore, planet gear B, which is paired with planet gear A, rotates counterclockwise, causing the right side gear (which meshes with planet gear B) to rotate clockwise.

Therefore the left and right side gears rotate in the opposite direction each other, thus accomplishing a motion differential.

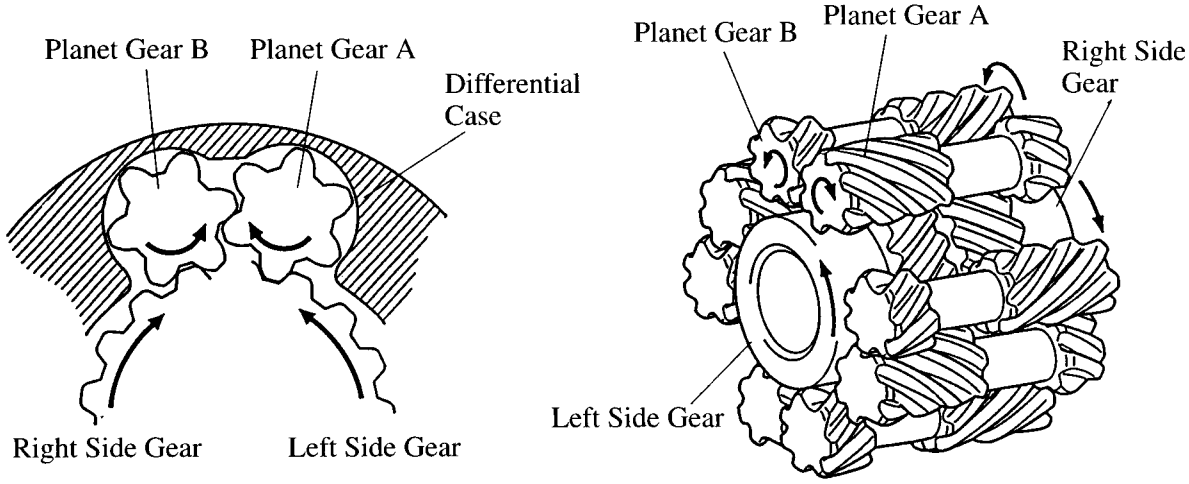

3) Limited Slip Differential Operation

Limited slip is accomplished primarily b the friction that is generated between the planet gear's tooth tips and the differential case's inner wall, and the friction that is generated between the side gear end face and the thrust washer.

The principle of limited slip enables the resultant reaction force F1 (which is created by the meshing reaction of the planet gear and the side gear and the meshing reaction of the planet gears themselves) to push the planet gear in the direction of the differential case in proportion to the input torque.

Due to the reaction force F1, the friction force u F2 (which is generated between the side gear end face and the thrust washer) applies a force to cancel out the rotational difference between the side gears themselves as well as between the side gear and the differential case.

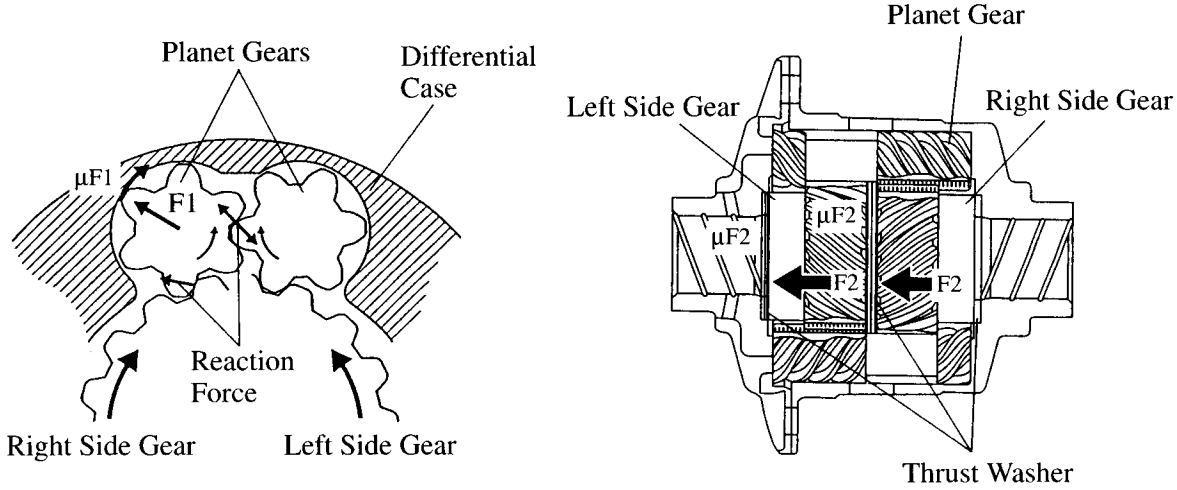

DRIVE SHAFT

The drive shaft outboard joint of the 2JZ–GE engine model has been changed from the cross–groove type CJV (Constant–Velocity Joint) to the Rzeppa type CVJ.

As in the ’96 model, the 2JZ–GTE engine model uses the drive shaft consisting of cross–groove type CVJs for both the inboard and outboard joints.

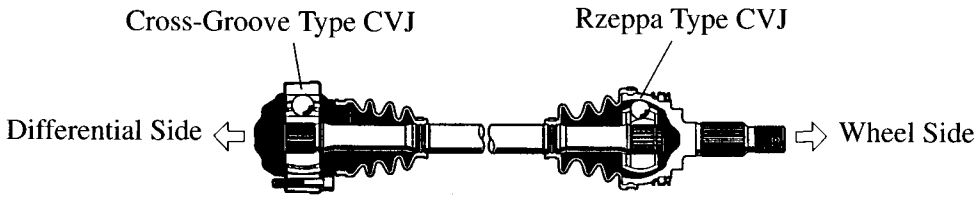

2JZ-GE Engine Model

BRAKES

1. General

The size of the master cylinder for the 2JZ–GTE engine model has been increased to realize excellent brake feeling.

The ABS actuator has been changed from the conventional three–position solenoid valves to a combination of compact two–position solenoid valves, thus achieving a compact and lightweight configuration.

3–channel type ABS with 4–speed sensor is used on the 2JZ–GE engine model.

4–channel type ABS with 4–speed sensors and linear type deceleration sensor is used on the 2JZ–GTE engine model.

Specifications◀

Model		’97 Model		’96 Model	
Engine Type		2JZ–GE	2JZ–GTE	2JZ–GE	2JZ–GTE
Item					
Master Cylinder	Type	Tandem	←	←	←
	Dia. mm (in.)	25.4 (1.00)	26.9 (1.06)	25.4 (1.00)	←
ABS Type		3 Channel Type ABS with 4–Speed Sensors	4 Channel Type ABS with 4–Speed Sensors and Linear Type Deceleration Sensor	4–Channel Type ABS with 4–Speed Sensor and Lateral Acceleration Sensors	←
ABS Type Actuator		6 Two Position Solenoid Valves	8 Two Position Solenoid Valves	4 Three Position Solenoid Valves	←

2. ABS

General

The ABS (Anti–Lock Brake System) is designed to control the brake fluid pressure of the brake wheel cylinder to help prevent wheel lock–up in instances of panic braking, and thus maintaining vehicle directional stability and control.

System Diagram

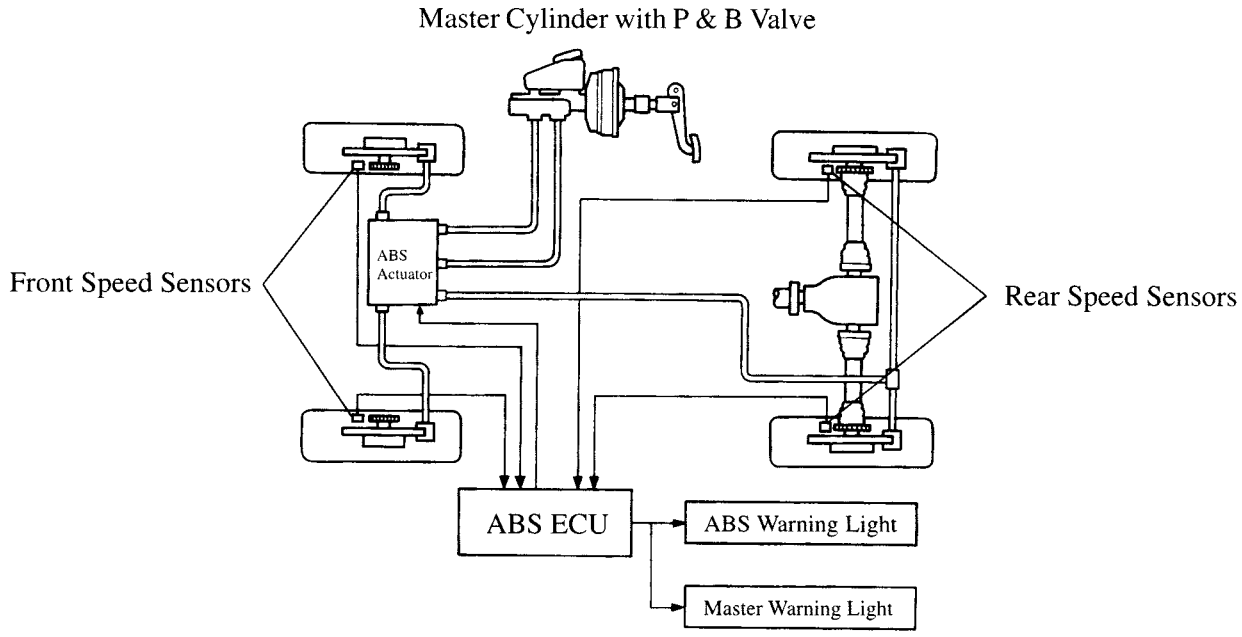

2JZ-GE Engine Model

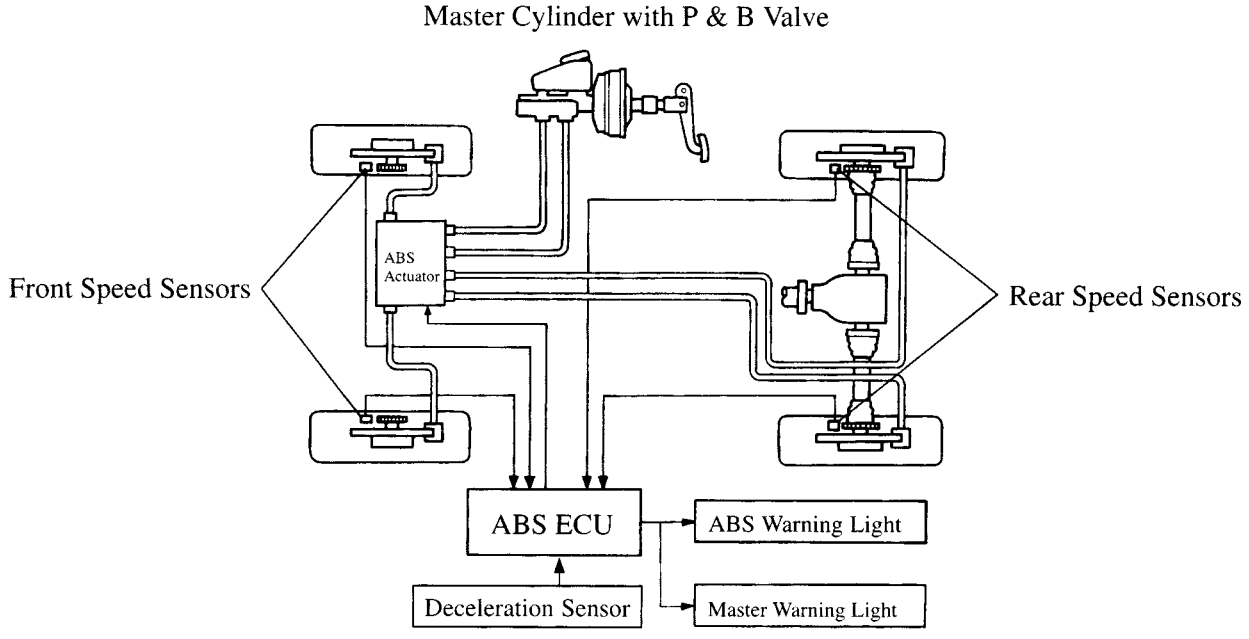

2JZ-GTE Engine Model

Wiring Diagram

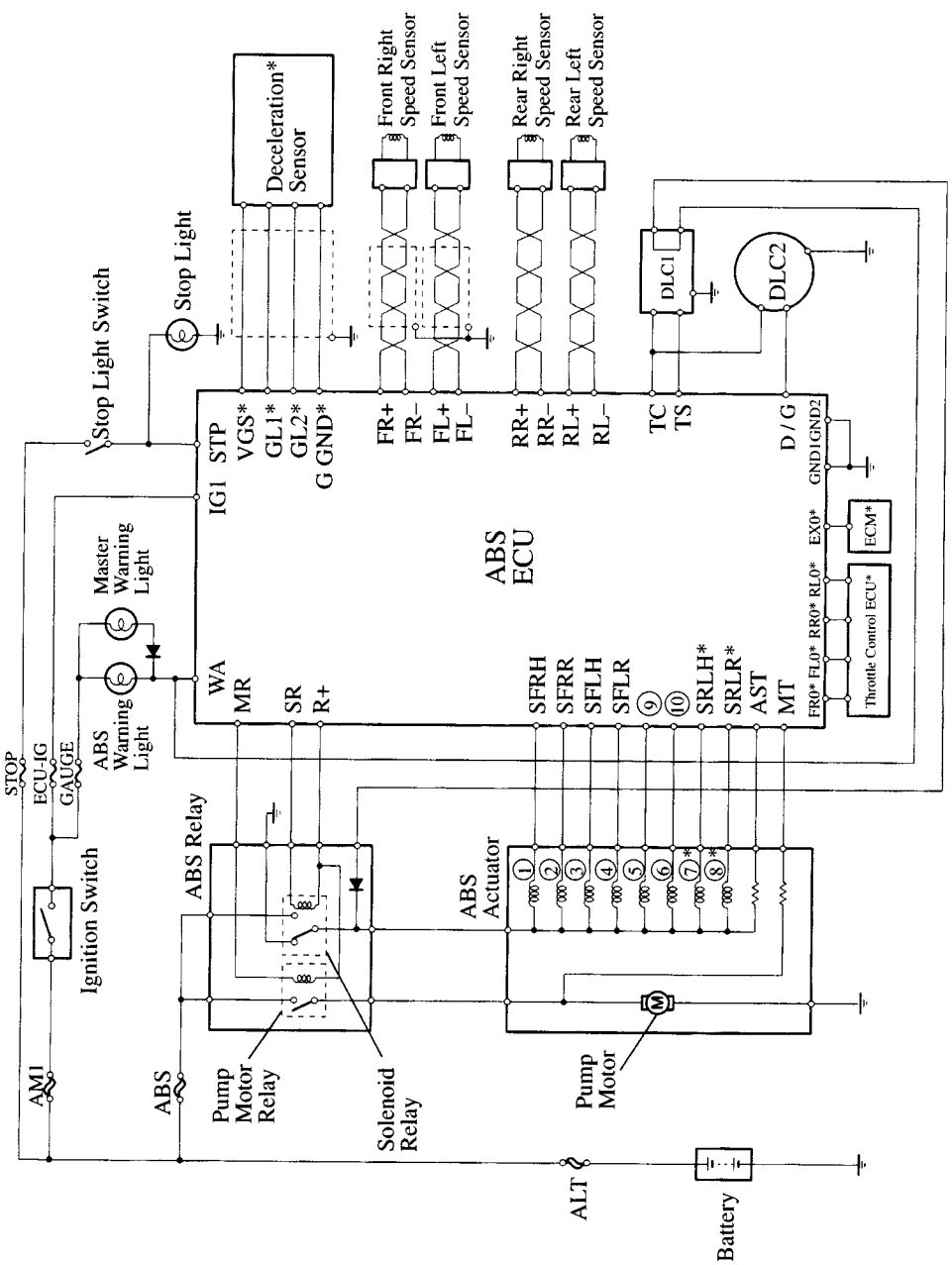

① Front Right Pressure Holding Valve
② Front Right Pressure Reduction Valve
③ Front Left Pressure Holding Valve
④ Front Left Pressure Reduction Valve
⑤ 2JZ-GE : Rear Pressure Holding Valve
2JZ-GTE : Rear Right Pressure Holding Valve
⑥ 2JZ-GE : Rear Pressure Reduction Valve
2JZ-GTE : Rear Right Pressure Reduction Valve
⑦ Rear Left Pressure Holding Valve
⑧ Rear Left Pressure Reduction Valve
⑨ 2JZ-GE : SRH, 2JZ-GTE: SRRH
⑩ 2JZ-GE : SRR, 2JZ-GTE: SRRR
*: Only 2JZ-GTE Engine Model

Layout of Components

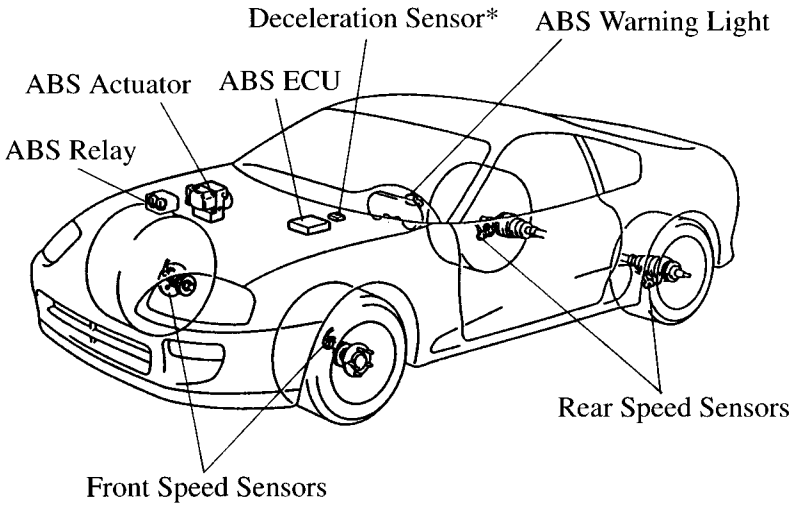

*: Only 2JZ-GTE Engine Model

Construction and Operation

1) Deceleration Sensor

The 2JZ–GTE engine model uses a linear type deceleration sensor to detect the deceleration rate in the vehicle's longitudinal direction and the acceleration rate in the vehicle's lateral direction.

Accordingly, the ABS in able to determine the vehicle's cornering condition and various road surface conditions to achieve a finely cornering control.

The basic construction and operation are the same as those of the '97 RAV4 4WD 2–door model. For details, see '96 RAV4 New Car Features (Pub. No. NCF124U), page 70.

2) ABS Actuator

a. General

The ABS actuator consists of 6 or 8 two–position solenoid valves, 2 pumps, 2 reservoirs and a motor. The table below compares the actuator against that of the '96 model.

Comparison of ABS Actuators◀

Model	'97 Model		'96 Model
Engine Type	2JZ–GE	2JZ–GTE	2JZ–GE, 2JZ–GTE
Actuator Type	2–Position	2–Position	3–Position
Component	Solenoid Valves	Solenoid Valves	Solenoid Valves
Control Unit	6 Two–Position Solenoid Valves (3 pressure holding valves and 3 pressure reduction valves)	8 Two–Position Solenoid Valves (4 pressure holding valves and 4 pressure reduction valves)	4 Three–Position Solenoid Valves

b. Hydraulic Circuit

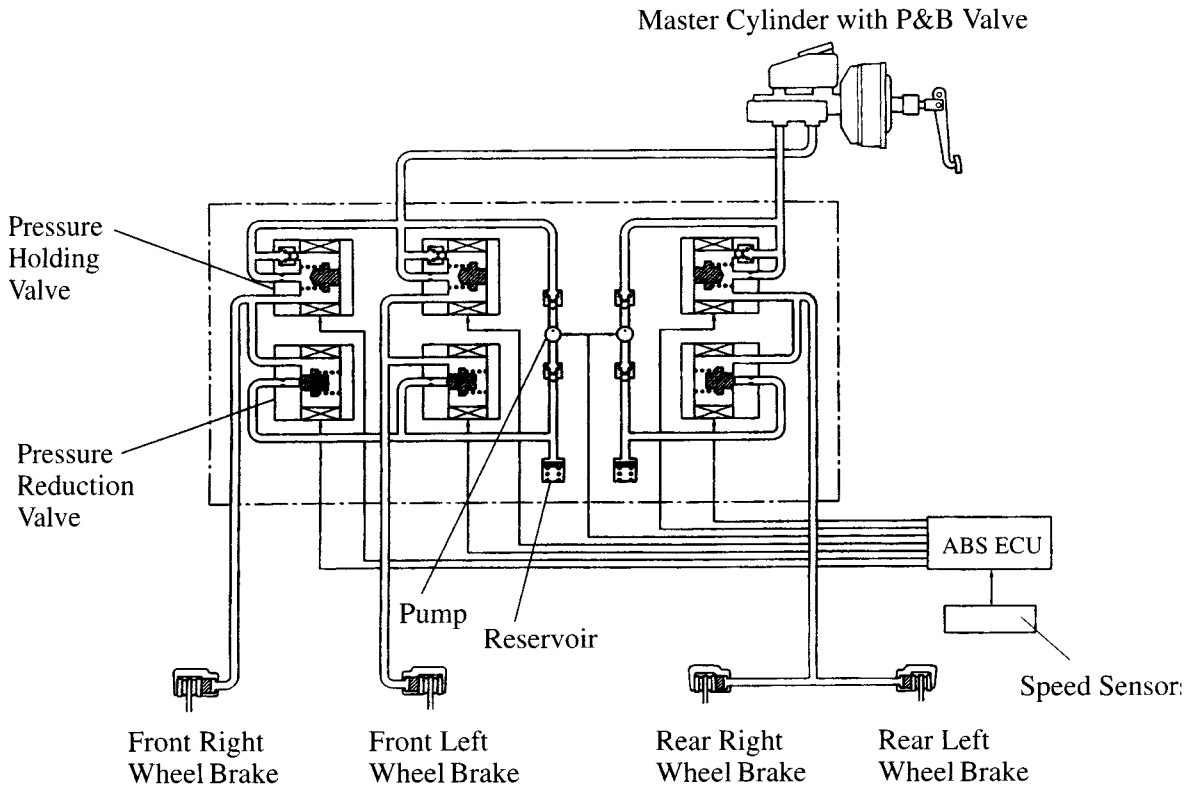

2JZ-GE Engine Model

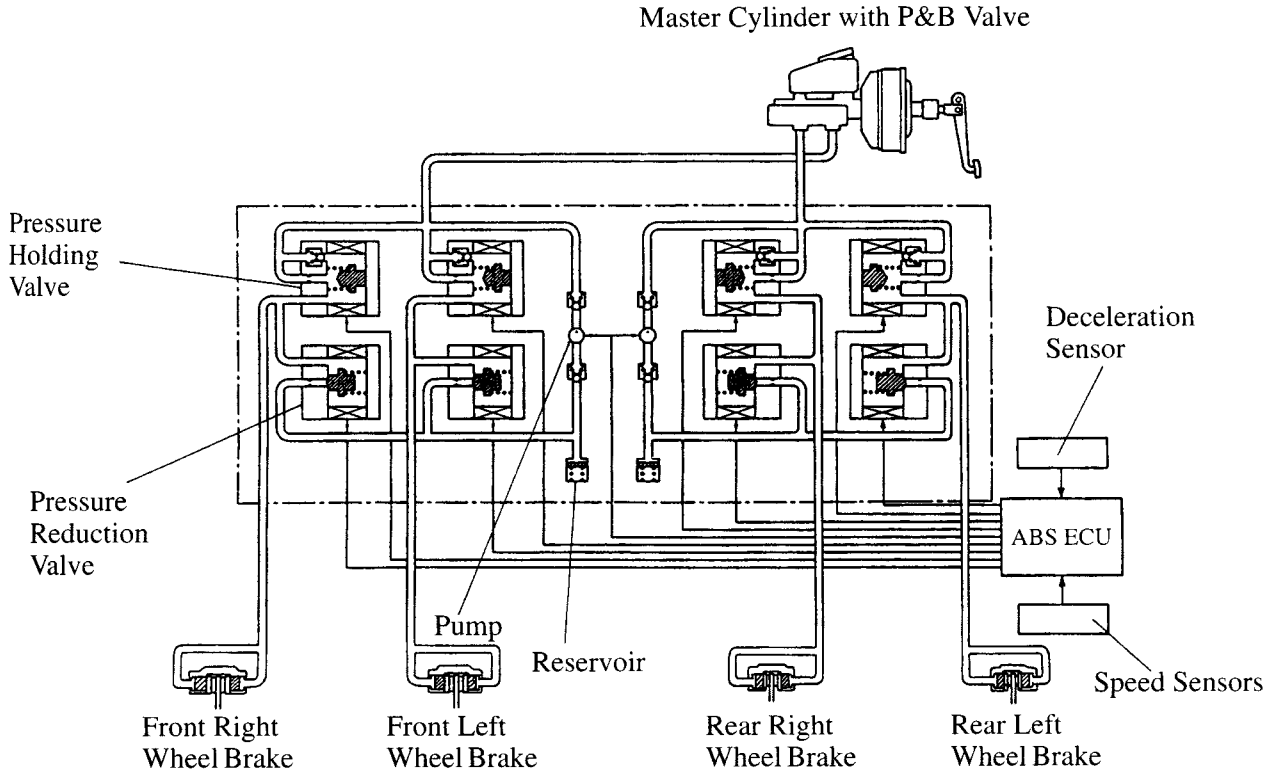

2JZ-GTE Engine Model

c. Operation

The hydraulic system of the ABS has 3 or 4 circuits. Although the hydraulic circuit described below has 1 circuit, it is applicable to other circuits as well.

i) During Normal Braking (ABS not Activated)

During normal braking, the ABS is not activated and the ECU dose not send control signal.

When the brake pedal is depressed, the fluid passes from port **A** to port **B**, and then flows to the brake wheel cylinder.

When the brake pedal is released, brake fluid returns from the brake wheel cylinder to the master cylinder through port **B** to port **A** and No. 1 Check Valve.

Condition of Actuator◀

Part Name	Signal from ABS ECU	Operation	
Pressure Holding Valve	OFF	Port A	Open
Pressure Reduction Valve	OFF	Port B	Closed
Pump Motor	OFF	Rotating	

Hydraulic Circuit◀

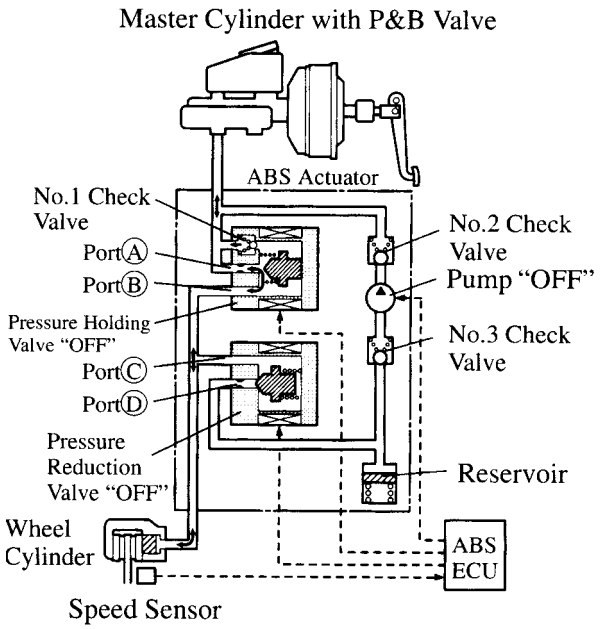

ii) During Emergency Braking (ABS Activated)

Pressure Reduction Mode

When the wheel about to lock , the control signal from the ECU causes port **A** to close and port **D** to open, thus engaging the pressure reduction mode.

At this time the brake fluid flows from the wheel cylinder, through ports **C** and **D**, to the reservoir reducing the wheel pressure.

At the same time the brake fluid is pumped and returned to the master cylinder.

Condition of Actuator◀

Part Name	Signal from ABS ECU	Operation	
Pressure Holding Valve	ON	Port A	Closed
Pressure Reduction Valve	ON	Port D	Open
Pump Motor	ON	Rotating	

Hydraulic Circuit◀

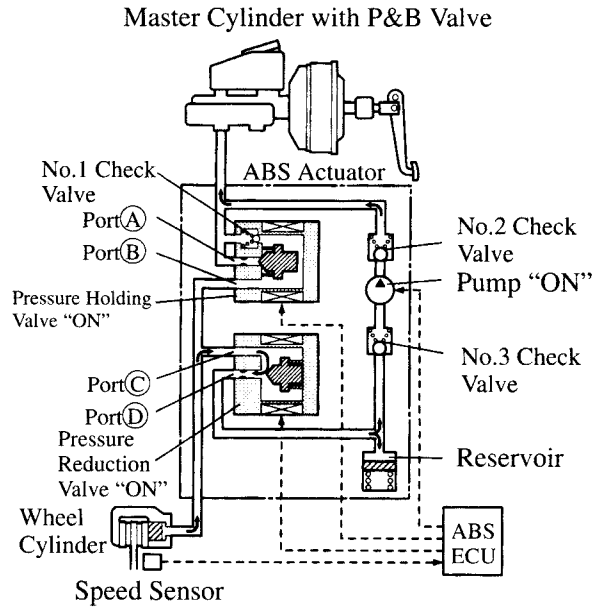

Pressure Holding Mode

After the fluid pressure in the wheel cylinder is reduced or increased to the required pressure, a control signal from the ECU causes ports **A** and **D** to close. As a result, the system engages in the pressure holding mode to maintain the fluid pressure in the wheel cylinder.

Condition of Actuator◀

Part Name	Signal from ABS ECU	Operation	
Pressure Holding Valve	ON	Port A	Closed
Pressure Reduction Valve	OFF	Port D	Closed
Pump Motor	ON	Rotating	

Hydraulic Circuit◀

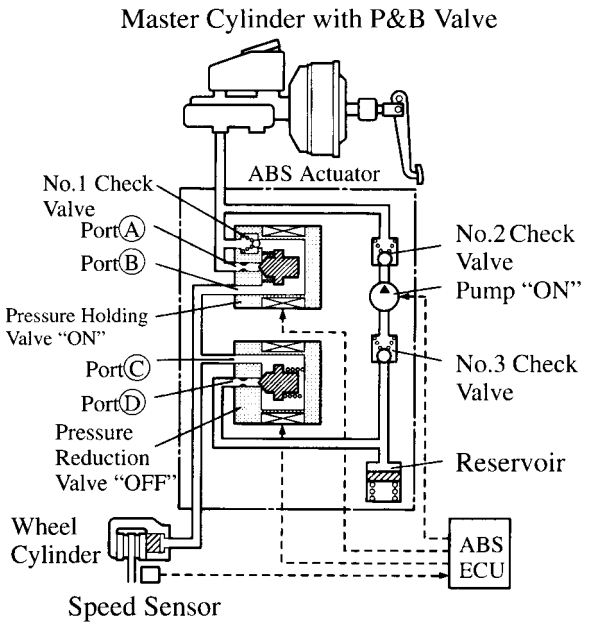

Pressure Increase Mode

When the fluid pressure in the wheel needs to be increased in order to apply more braking force, a control signal from the ECU causes port **A** to open, port **D** to close, thus engaging the increase mode.

Accordingly, the circuit will be in the same state as in normal braking, in which the brake fluid is sent from the master cylinder to the wheel cylinder to increase the fluid pressure in the wheel cylinder.

The fluid pressure increase rate is controlled by repetition of the pressure increase and pressure holding mode.

Condition of Actuator◀

Part Name	Signal from ABS ECU	Operation	
Pressure Holding Valve	OFF	Port A	Open
Pressure Reduction Valve	OFF	Port D	Closed
Pump Motor	ON	Rotating	

Hydraulic Circuit◀

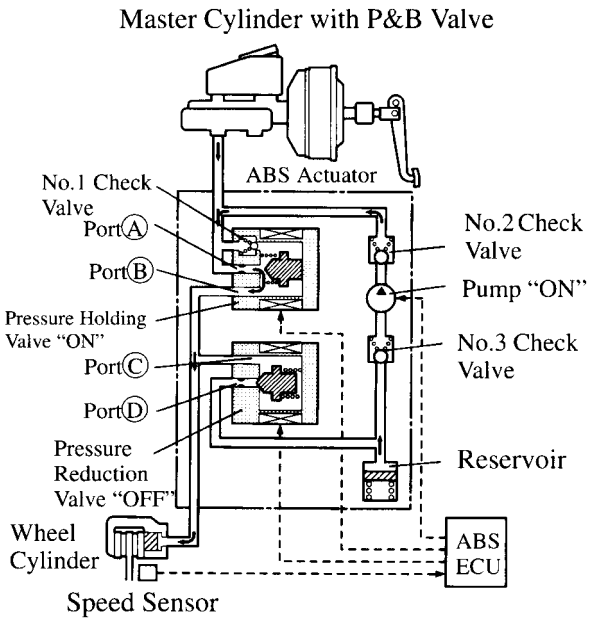

3) ABS ECU

a. Wheel Speed Control

The ECU constantly receives signals form the 4–speed sensors and a deceleration sensor (2JZ–GTE engine model), and estimates the speed and deceleration rate of the vehicle by calculating the speed and deceleration rate of each wheel.

b. Initial Check

An initial check is carried out every time once after the engine has started and the initial vehicle speed exceeds 6 km/h (4 mph).

c. Self–Diagnosis

If the ABS ECU detects a malfunction in the ABS, the ABS warning light and a master warning lights in the combination meter will light up and alert the driver that a malfunction has occurred. The ECU will also store the codes of the malfunctions.

SUSPENSION

1. General

The shock absorber of the 2JZ–GTE engine model with manual transmission has been changed from the mono–tube, gas–filled shock absorber to the twin–tube, gas–filled shock absorber, which is the same type that is used on the 2JZ–GE engine model.

The same rubber–integrated ball bushing that is used on the 2JZ–GTE engine model is used for the upper arm bushing of the rear suspension of the 2JZ–GE engine model.

The brace rod of the rear subframe has been relocated to realize excellent riding comfort, in addition, this provides excellent stability, an controllability.

FOREWORD

To assist you in your service activities, this manual explains the main characteristics of the 1997 model year vehicles, in particular providing a technical explanation of the construction and operation of new mechanisms and new technology used.

This manual consists of the following sections.

1. ~ 11. Each Model —Changed features for each model are explained.

12. Appendix —Major technical specifications of the vehicle.

CAUTION, NOTICE, *REFERENCE* and **NOTE** are used the following ways:

CAUTION	A potentially hazardous situation which could result in injury to people may occur if instructions on what to do or not do are ignored.
NOTICE	Damage to the vehicle or components may occur if instructions on what to do or not do are ignored.
REFERENCE	Explains the theory behind mechanisms and techniques.
NOTE	Notes or comments not included under the above 3 titles.

For the new features of the Camry, refer to the following New Car Features.

Manual Name	Pub. No.	Date of issue
◀1997 Camry New Car Features	NCF134U	July, 1997

All information contained herein is the most up–to–date at the time of publication. We reserve the right to make changes without prior notice.

TOYOTA MOTOR CORPORATION

1996 TOYOTA MOTOR CORPORATION
All rights reserved. This book may not be reproduced or copied, in whole or in part, without the written permission of Toyota Motor Corporation.

MODEL CODE

JZA80 L – A J M V F A

① ② ③ ④ ⑤ ⑥ ⑦ ⑧

①	**BASIC MODEL CODE**
	JZA80 : With 2JZ–GE Engine or 2JZ–GTE Engine

②	**STEERING WHEEL POSITION**
	L : Left–Hand Drive

③	**MODEL NAME**
	A : Supra

④	**BODY TYPE**
	L : Liftback
	J : Liftback with Sport Roof

⑤	**GEARSHIFT TYPE**
	F : 6–Speed Manual, Floor
	M : 5–Speed Manual, Floor
	P : 4–Speed Automatic, Floor

⑥	**GRADE**
	V : —

⑦	**ENGINE SPECIFICATION**
	F : SFI and DOHC
	Z : SFI and DOHC with Turbocharger

⑧	**DESTINATION**
	A : U.S.A..
	K : Canada

MODEL LINE–UP

TRANSAXLE				5–Speed Manual	6–Speed Manual	4–Speed Automatic	
DESTI–NATION	ROOF	GRADE	ENGINE	W58	V160	A340E	A340E*
U.S.A..	Standard	—	2JZ–GE	JZA80L–ALMVFA		JZA80L–ALPVFA	
	Sport			JZA80L–AJMVFA		JZA80L–AJPVFA	
	Standard		2JZ–GTE		JZA80L–ALFVZA		JZA80L–ALPVZA
	Sport				JZA80L–AJFVZA		JZA80L–AJPVZA
Canada	Sport	—	2JZ–GTE		JZA80L–AJFVZK		JZA80L–AJPVZK

* : Electronically Controlled Transmission with and intelligent sporty control

:New :Discontinued

NEW FEATURES

◀ EXTERIOR DESIGN

1. Headlights, Turn Signal Light and Front Bumper

Multi–reflector type headlights, which contain a multiple paraboloid reflector, have been adopted for the high–beam headlights. Accordingly, the lens cut in headlights has been significantly decreased to improve the appearance.

The shape of the turn signal light lenses has been matched to the curvature of the bumper in order to make them appear integrated with the bumper. In addition, clear lenses are used, and the parking lights gave been changed from those enclosed in the headlights to those enclosed in the turn signal lights.

A bar has been added to the air intake opening in the center of the front bumper.

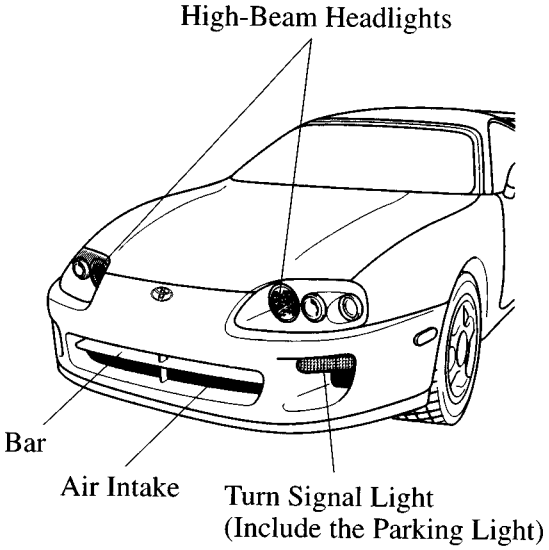

'97 Model

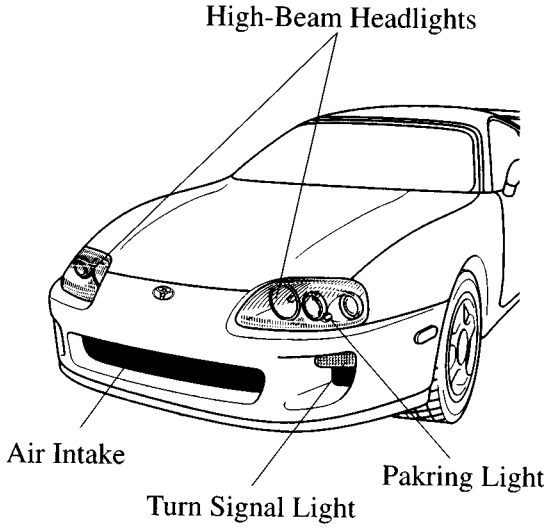

'96 Model

2. Rear Combination Light

The lens cut of the rear combination lights has been changed from the vertical cut to the lateral cut. In addition, the rear combination lights have adopted multi–reflectors. As a result of these changes a light design has been achieved to give a sensor for translucency and depth.

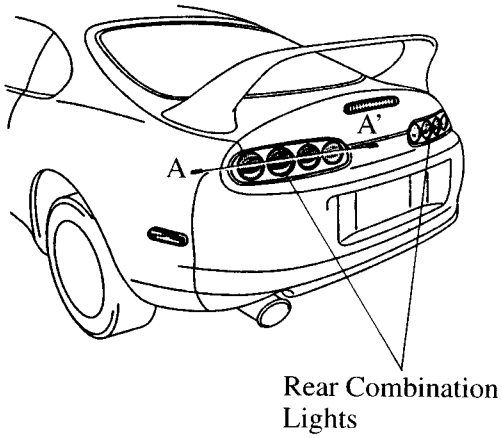

'97 Model

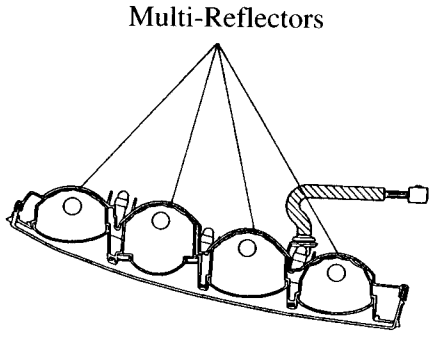

A – A' Cross Section

SUPRA

SUPRA

OUTLINE NEW FEATURES

The Supra, which represents Toyota's advanced automotive technology, has earned a reputation as a truly luxurious sports car. The following changes have been made for the 1997 model year.

1. Model Line–Up

The JZA80L–ALPVZA model has been discontinued.

The JZA80L–ALFVZA and JZA80L–AJFVZA models have been added.

2. Exterior Design

The multi–reflector type headlights are adopted.

The design of the turn signal light, front bumper and rear combination light has been changed.

3. Interior Equipment

The front seats have been changed from the separate–headrest type seats of the '96 model to the integrated headrest type seats without changing their basic design.

4. 2JZ–GTE Engine

An aluminum radiator core is adopted for weight reduction.

5. Differential

A differential gear ratio has been changed on he 2JZ–GE engine model.

A helical gear type torque–sensing LSD is available as an option on the 2JZ–GE engine model and 2JZ–GTE engine with automatic transmission model.

6. Drive Shaft

An outboard joint of drive shaft has been changed from cross–groove type CVJ (Constant–Velocity Joint) to Rzeppa type CVJ on the 2JZ–GE engine model.

7. Brakes

A master cylinder diameter has been changed on the 2JZ–GTE engine model.

An ABS has been changed to the 2–position solenoid valve type actuator.

8. Suspension

Various areas of the suspension system have been revised to realize excellent riding comfort, in addition, this provides excellent stability, and controllability.

9. Body

Reinforcements and gussets have been newly added to the bottom of the front and center pillars.

An energy absorbing pads are provided at the door trim.

Sound absorbing material is newly provided in the front pillar and in the quarter to reduce road noise.

The material of sound absorbing material used in the trim and garnish has been changed.

10. Light

An illuminated entry system has been discontinued.

11. SRS Airbag

As in the ’95 Avalon, a 1–sensor type airbag system has been adopted.

12. Cruise Control System

As in the ’97 Tercel/Paseo, a new motor type actuator has been adopted.

The control method for the manual and auto cancel functions have been changed.

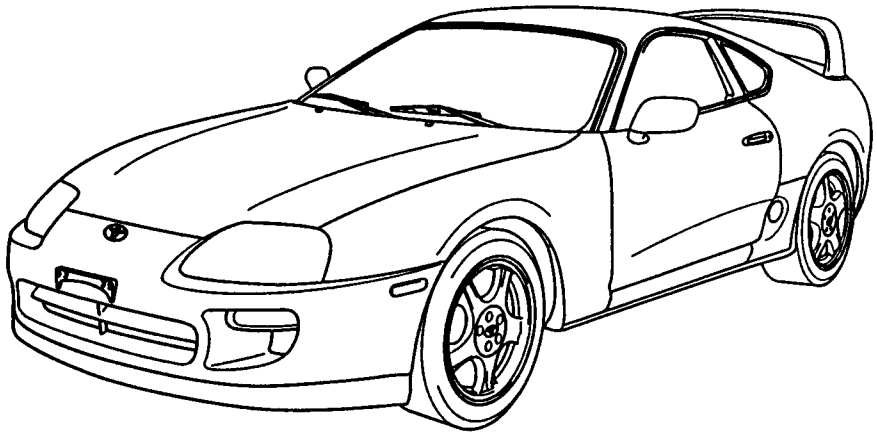

SUPRA

Item			Area	U.S.A..			
Body Type				2–Door Liftback (Standard Roof)		2–Door Liftback (Sport Roof)	
Vehicle Grade				—			
Model Code				JZA80L–ALMVFA	JZA80L–ALPVFA	JZA80L–AJMVFA	JZA80L–AJPVFA
Major Dimensions & Vehicle Weights	Overall	Length	mm (in.)	4515 (177.8)	←	←	←
		Width	mm (in.)	1810 (71.3)	←	←	←
		Height*	mm (in.)	1275 (50.2)	←	←	←
	Wheel Base		mm (in.)	2550 (100.4)	←	←	←
	Tread	Front	mm (in.)	1520 (59.8)	←	←	←
		Rear	mm (in.)	1525 (60.0)	←	←	←
	Effective Head Room	Front	mm (in.)	953.2 (37.5)	←	946.8 (37.3)	←
		Rear	mm (in.)	834.5 (32.9)	←	←	←
	Effective Leg Room	Front	mm (in.)	1117.0 (44.0)	←	←	←
		Rear	mm (in.)	605.1 (23.8)	←	←	←
	Shoulder Room	Front	mm (in.)	1376.3 (54.2)	←	←	←
		Rear	mm (in.)	1113.2 (43.8)	←	←	←
	Overhang	Front	mm (in.)	950 (37.4)	←	←	←
		Rear	mm (in.)	1015 (40.0)	←	←	←
	Min. Running Ground Clearance		mm (in.)	120 (4.7)	←	←	←
	Angle of Approach		degrees	13	←	←	←
	Angle of Departure		degrees	17	←	←	←
	Curb Weight	Front	kg (lb)	762 (1680)	778 (1715)	773 (1705)	789 (1740)
		Rear	kg (lb)	694 (1530)	703 (1550)	710 (1565)	719 (1585)
		Total	kg (lb)	1456 (3210)	1481 (3265)	1483 (3270)	1508 (3325)
	Gross Vehicle Weight	Front	kg (lb)	937 (2065)	←	←	←
		Rear	kg (lb)	1002 (2210)	←	←	←
		Total	kg (lb)	1939 (4275)	←	←	←
	Fuel Tank Capacity		l (U.S. gal., Imp. gal.)	70 (18.5, 15.4)	←	←	←
	Luggage Compartment Capacity		m^3 (cu. ft.)	—	—	—	—
Performance	Max. Speed		km/h (mph)	240 (150)	←	←	←
	Max. Cruising Speed		km/h (mph)	193 (120)	←	←	←
	Acceleration	0 to 100 km/h	sec.	6.8	7.4	6.8	7.4
		0 to 400 m	sec.	15.2	15.7	15.2	15.7
	Max. Permissible Speed	1st Gear	km/h (mph)	54 (34)	61 (38)	54 (34)	61 (38)
		2nd Gear	km/h (mph)	94 (58)	112 (70)	94 (58)	112 (70)
		3rd Gear	km/h (mph)	139 (86)	—	139 (86)	—
		4the Gear	km/h (mph)	—	—	—	—
	Turning Diameter (Outside Front)	Wall to Wall	m (ft.)	11.5 (38)	←	←	←
		Curb to Curb	m (ft.)	10.9 (36)	←	←	←
Engine	Engine Type			2JZ–GE	←	←	←
	Valve Mechanism			24–Valve, DOHC	←	←	←
	Bore x Stroke		mm (in.)	86.0 x 86.0 (3.39 x 3.39)	←	←	←
	Displacement		cm^3 (cu. in..)	2997 (182.9)	←	←	←
	Compression Ratio			10.0 : 1	←	←	←
	Carburetor Type			SFI	←	←	←
	Research Octane No.		RON	96	←	←	←
	Max. Output (SAE–NET)		kW/rpm (HP @ rpm)	164/5800 (220 @ 5800)	←	←	←
	Max. Torque (SAE–NET)		N·m/rpm (lb–ft @ rpm)	285/4800 (210 @ 4800)	←	←	←
Engine Electrical	Battery Capacity (20HR)		Voltage & Amp. hr.	12–52	←	←	←
	Generator Output		Watts	1080	←	←	←
	Starter Output		kW	1.4	←	←	←
Chassis	Clutch Type			Dry, Single Plate	—	Dry, Single Plate	—
	Transmission Type			W58	A340E	W58	A340E
	Transmission Gear Ratio	In First		3.285	2.804	3.285	2.804
		In Second		1.894	1.531	1.894	1.531
		In Third		1.275	1.000	1.275	1.000
		In Fourth		1.000	0.705	1.000	0.705
		In Fifth		0.783	—	0.783	—
		In Sixth		—	—	—	—
		In Reverse		3.768	2.393	3.768	2.393
	Differential Gear Ratio			4.083	←	←	←
	Differential Gear Size		mm (in.)	205 (8.07)	←	←	←
	Brake Type	Front		Ventilated Disc	←	←	←
		Rear		Ventilated Disc	←	←	←
	Parking Brake Type			Dual–Servo	←	←	←
	Brake Booster Type and Style		in.	Tandem 8" + 9"	←	←	←
	Proportioning Valve Type			P & B Valve	←	←	←
	Suspension Type	Front		Double Wishbone	←	←	←
		Rear		Double Wishbone	←	←	←
	Stabilizer Bar	Front		STD	←	←	←
		Rear		STD	←	←	←
	Steering Gear Type			Rack & Pinion	←	←	←
	Steering Gear Ratio (Overall)			17.5 : 1	←	←	←
	Power Steering Type			Integral Type	←	←	←

* : Unladen Vehicle, *1 : Electrically Controlled Transmission with an intelligent sporty control

U.S.A..			Canada	
2–Door Liftback (Standard Roof)	2–Door Liftback (Sport Roof)			
	—			
JZA80L–ALFVZA	JZA80L–AJFVZA	JZA80L–AJPVZA	JZA80L–AJFVZK	JZA80L–AJPVZK
←	←	←	←	←
←	←	←	←	←
←	←	←	←	←
←	←	←	←	←
←	←	←	←	←
←	←	←	←	←
953.2 (37.5)	946.8 (37.3)	←	←	←
←	←	←	←	←
←	←	←	←	←
←	←	←	←	←
←	←	←	←	←
←	←	←	←	←
←	←	←	←	←
←	←	←	←	←
←	←	←	←	←
←	←	←	←	←
←	←	←	←	←
855 (1885)	866 (1910)	871 (1920)	866 (1910)	871 (1920)
708 (1560)	723 (1595)	←	←	←
1563 (3445)	1589 (3505)	1594 (3515)	1589 (3505)	1594 (3515)
←	←	←	←	←
←	←	←	←	←
←	←	←	←	←
←	←	←	←	←
—	—	—	—	—
250 (155)	←	←	←	←
200 (125)	←	←	←	←
5.1	5.1	5.8	5.1	5.8
13.5	13.5	14.1	13.5	14.1
60 (37)	←	66 (41)	60 (37)	66 (41)
97 (60)	←	121 (75)	97 (60)	121 (75)
136 (85)	←	—	136 (85)	—
175 (109)	←	—	175 (109)	—
←	←	←	←	←
←	←	←	←	←
2JZ–GTE	←	←	←	←
←	←	←	←	←
←	←	←	←	←
←	←	←	←	←
8.5 : 1	←	←	←	←
←	←	←	←	←
←	←	←	←	←
239/5600 (320 @ 5600)	←	←	←	←
427/4000 (315 @ 4000)	←	←	←	←
←	←	←	←	←
←	←	1200	1080	1200
←	←	←	←	←
Dry, Single Plate	←	—	Dry, Single Plate	—
V160	←	A340E*[1]	V160	A340E*[1]
3.827	←	2.804	3.827	2.804
2.360	←	1.531	2.360	1.531
1.685	←	1.000	1.685	1.000
1.312	←	0.705	1.312	0.705
1.000	←	—	1.000	—
0.793	←	—	0.793	—
3.280	←	2.393	3.280	2.393
3.133	←	3.769	3.133	3.769
222 (8.74)	←	205 (8.07)	222 (8.74)	205 (8.74)
←	←	←	←	←
←	←	←	←	←
←	←	←	←	←
←	←	←	←	←
←	←	←	←	←
←	←	←	←	←
←	←	←	←	←
←	←	←	←	←
←	←	←	←	←
←	←	←	←	←
←	←	←	←	←
←	←	←	←	←

AC0PZ-01

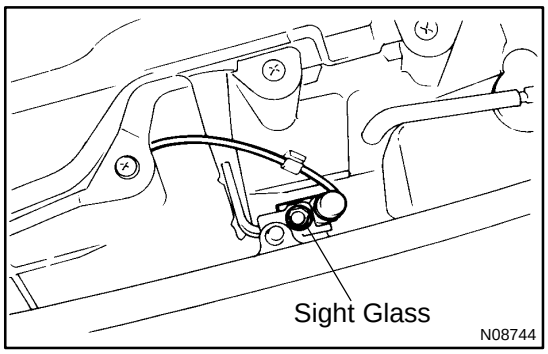

ON-VEHICLE INSPECTION

1. INSPECT REFRIGERANT VOLUME

Observe the sight glass on the liquid tube.

Test conditions:

- Running engine at 1,500 rpm
- Blower speed control switch at ”HI” position
- A/C switch ON
- Temperature control dial at ”COOL” position
- Fully open the doors

Item	Symptom	Amount of refrigerant	Remedy
1	Bubbles present in sight glass	Insufficient*	(1) Check for gas leakage with gas leak detector and repair if necessary (2) Add refrigerant until bubbles disappear
2	No bubbles present in sight glass	None, sufficient or too much	Refer item 3 and 4
3	No temperature difference between compressor inlet and outlet	Empty or nearly empty	(1) Check for gas leakage with gas leak detector and repair if necessary (2) Add refrigerant until bubbles disappear
4	Temperature between compressor inlet and outlet is noticeably different	Correct or too much	Refer to items 5 and 6
5	Immediately after air conditioning is turned off, refrigerant in sight glass stays clear	Too much	(1) Discharge refrigerant (2) Evacuate air and charge proper amount of purified refrigerant
6	When air conditioning is turned off, refrigerant foams and then stays clear	Correct	-

*: Bubbles in the sight glass with ambient temperatures higher than usual can be considered normal if cooling is sufficient.

2. INSPECT REFRIGERANT PRESSURE WITH MANIFOLD GAUGE SET

This is a method in which the trouble is located by using a manifold gauge set. Read the manifold gauge pressure when these conditions are established.

Test conditions:

- Temperature at the air inlet with the switch set at RECIRC is 30 - 35 ˚C (86 - 95 ˚F)
- Engine running at 1500 rpm
- Blower speed control switch at ”HI” position
- Temperature control dial on ”COOL” position

HINT:

It should be noted that the gauge indications may vary slightly due to ambient temperature conditions.

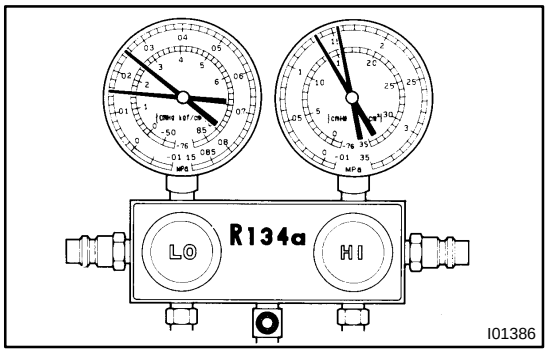

(1) Normally functioning refrigeration system.

Gauge reading:

Low pressure side:

0.15 - 0.25 MPa (1.5 - 2.5 kgf/cm^2)

High pressure side:

1.37 - 1.57 MPa (14 - 16 kgf/cm$^{2)}$

(2) Moisture present in refrigeration system.

Condition: Periodically cools and then fails to cool

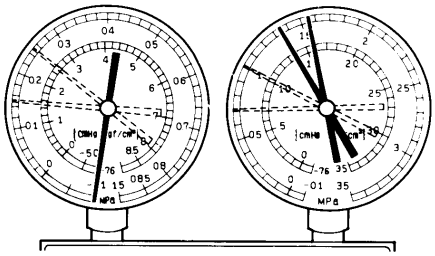

I01387

Symptom seen in refrigeration system	Probable cause	Diagnosis	Remedy
During operation, pressure on low pressure side sometimes become a vacuum and sometime normal	Moisture entered in refrigeration system freezes at expansion valve orifice and temporarily stops cycle, by normal state is restored after a time when the ice melts	• Drier oversaturated state • Moisture in refrigeration system freezes at expansion valve orifice and blocks circulation of refrigerant	(1) Replace receiver (2) Remove moisture in cycle through repeatedly evacuating air (3) Charge proper amount of new refrigerant

(3) Insufficient cooling

Condition: Insufficient cooling

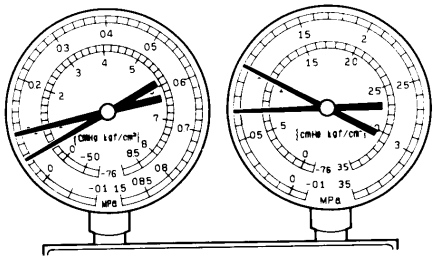

I01388

Symptom seen in refrigeration system	Probable cause	Diagnosis	Remedy
• Pressure low on both low and high pressure sides • Bubbles seen in sight glass continuously • Insufficient cooling performance	Gas leakage at some place in refrigeration system	• Insufficient refrigerant in system • Refrigerant leaking	(1) Check for gas leakage with gas leak detector and repair if necessary (2) Charge proper amount of refrigerant (3) If indicated pressure value is near 0 when connected to gauge, create the vacuum after inspecting and repairing the location of the leak

(4) Poor circulation of refrigerant

Condition: Insufficient cooling

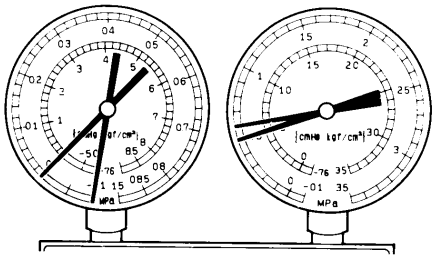

I01389

Symptom seen in refrigeration system	Probable cause	Diagnosis	Remedy
• Pressure low in both low and high pressure sides • Frost on tube from receiver to unit	Refrigerant flow obstructed by dirt in receiver	Receiver clogged	Replace receiver

(5) Refrigerant does not circulate

Condition: Does not cool (Cools from time to time in some cases)

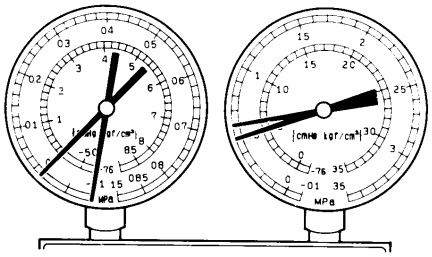

I01449

Symptom seen in refrigeration system	Probable cause	Diagnosis	Remedy
• Vacuum indicated on low pressure side, very low pressure indicated on high pressure side • Frost or dew seen on piping before and after receiver/ drier or expansion valve	• Refrigerant flow obstructed by moisture or dirt in refrigeration system • Refrigerant flow obstructed by gas leakage from expansion valve	Refrigerant does not circulate	(1) Check expansion valve (2) Clean out dirt in expansion valve by blowing with air (3) Replace receiver (4) Evacuate air and charge new refrigerant to proper amount (5) For gas leakage from expansion valve, replace expansion valve

(6) Refrigerant overcharged or insufficient cooling of condenser

Condition: Insufficient cooling

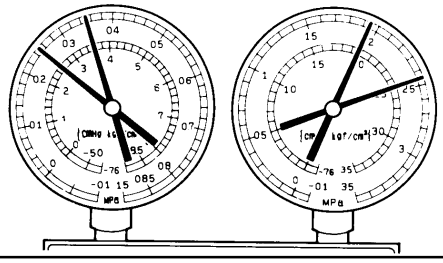

I01390

Symptom seen in refrigeration system	Probable cause	Diagnosis	Remedy
• Pressure too high on both low and high pressure sides • No air bubbles seen through the sight glass even when the engine rpm is lowered	• Unable to develop sufficient performance due to excessive refrigeration system • Insufficient cooling of condenser	• Excessive refrigerant in cycle → refrigerant over charged • Condenser cooling → condenser fins clogged of condenser fan faulty	(1) Clean condenser (2) Check condenser fan motor operation (3) If (1) and (2) are in normal state, check amount of refrigerant Charge proper amount of refrigerant

(7) Air present in refrigeration system

Condition: Insufficient cooling

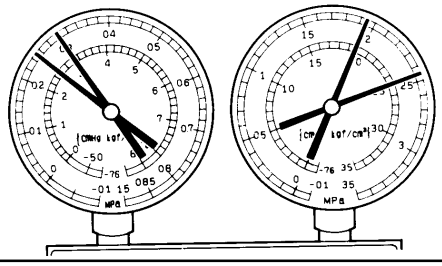

NOTE : These gauge indications are shown when the refrigeration system has been opened and the refrigerant charged without vacuum purging.

I01392

Symptom seen in refrigeration system	Probable cause	Diagnosis	Remedy
• Pressure too high on both low and high pressure sides • The low pressure piping hot to touch • Bubbles seen in sight glass	Air entered in refrigeration system	• Air present in refrigeration system • Insufficient vacuum purging	(1) Check compressor oil to see if it is dirty or insufficient (2) Evacuate air and charge new refrigerant

(8) Expansion valve improperly

Condition: Insufficient cooling

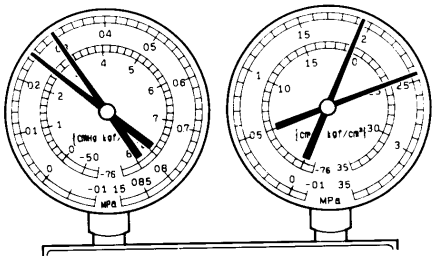

I01450

Symptom seen in refrigeration system	Probable cause	Diagnosis	Remedy
• Pressure too high on both low and high pressure sides • Frost or large amount of dew on piping on low pressure side	Trouble in expansion valve	• Excessive refrigerant in low pressure piping • Expansion valve opened too wide	Check expansion valve Replace if defective

(9) Defective compression compressor

Condition : Does not cool

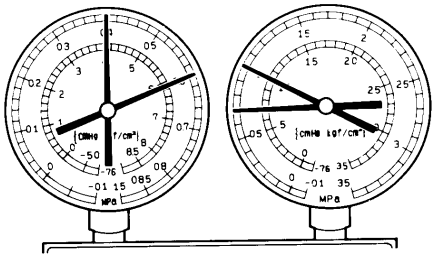

I01393

Symptom seen in refrigeration system	Probable cause	Diagnosis	Remedy
• Pressure too high on low and high pressure sides • Pressure too low on high pressure side	Internal leak in compressor	• Compression defective • Valve leaking or broken sliding parts	Repair or replace compressor

3. INSPECT IDLE-UP SPEED

(a) Warm up engine

(b) Inspect idle-up speed when the these conditions are established.

Test conditions:

- Blower speed control switch at ”HI” position
- Temperature control dial at ”COOL” position
- A/C switch ON
- Put gear shift in neutral

2JZ-GE (M/T)

Magnetic clutch condition	Idle-up speed
Not engaged	700 ± 50 rpm
Engaged	900 ± 50 rpm

If idle speed is not as specified, check the IAC valve and air intake system.

2JZ-GE (A/T)

Magnetic clutch condition	Idle-up speed
Not engaged	700 ± 50 rpm
Egagedn	800 ± 50 rpm

If idle speed is not as specified, check the IAC valve and air intake system.

2JZ-GTE

magnetic clutch condition	Idle-up speed
Not engaged	650 ± 50 rpm
Engaged	800 ± 50 rpm

If idle speed is not as specified, check the IAC valve and air intake system.

4. INSPECT FOR LEAKAGE OF REFRIGERANT

(a) Perform in these conditions:

- Stop engine.
- Secure good ventilation (If the gas leak detector may not react to volatile gases which are not refrigerant, such as evaporated gasoline and exhaust gas.)
- Repeat the test 2 or 3 times.
- Make sure that there is some refrigerant remaining in the refrigeration system.

  When compressor is OFF: approx. 392 - 588 kPa (4 - 6 kgf/ cm^2, 57 - 85 psi)

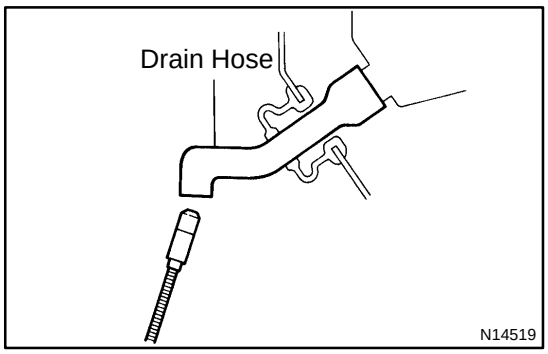

(b) Bring the gas leak detector close to the drain hose before performing the test.

HINT:

- After the blower motor has stopped, leave the cooling unit for more than 15 minutes.
- Expose the gas leak detector sensor under the drain hose.
- When bring the gas leak detector close to the drain hose, make sure that the gas leak detector does not react to the volatile gases.

If such reaction is unavoidable, the vehicle must be lifted up.

(c) If gas leak is not detected on the drain hose, remove the blower resistor from the cooling unit. Then insert the gas leak detector sensor into the unit and perform the test.

(d) Disconnect the connector and leave the pressure switch for approx. 20 minutes. Then bring the gas leak detector close to the pressure switch and perform the test.

(e) Bring the gas leak detector close to the refrigerant lines and perform the test.

AC0Q1-01

CHARGING

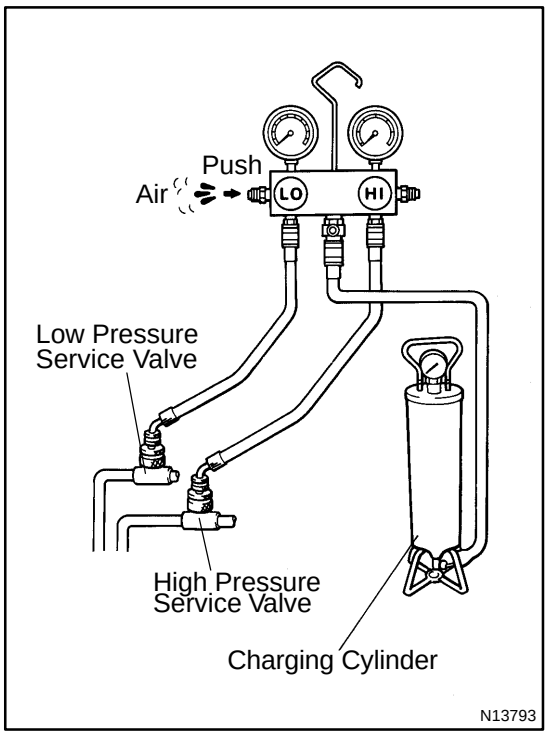

1. INSTALL CHARGING CYLINDER

HINT:

When handling the charging cylinder, always follow the directions given in the instruction manual.

(a) Charge the proper amount of refrigerant into the charging cylinder.

(b) Connect the center hose to the charging cylinder.

CAUTION:

Do not open both high and low hand valves of manifold gauge set.

(c) Open the valve of charging cylinder.

(d) Press the valve core on the side of manifold gauge and expel the air inside of the center hose.

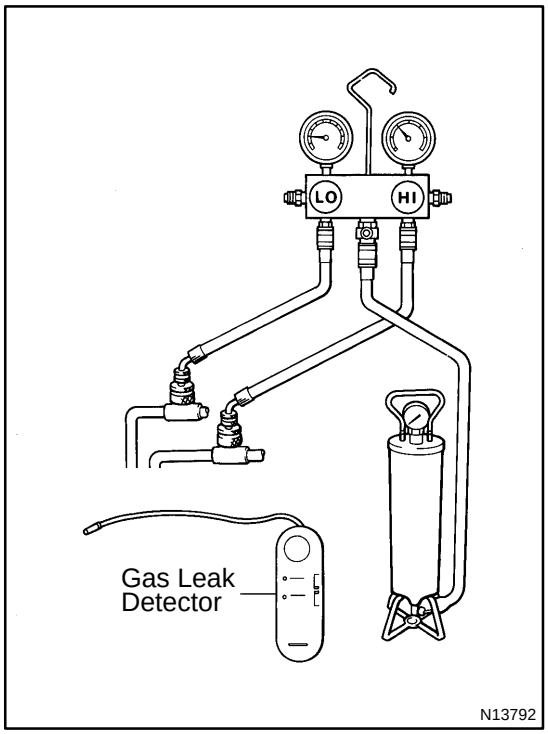

2. INSPECT REFRIGERATION SYSTEM FOR LEAKS

(a) Open the high pressure hand valve and charge refrigerant.

(b) When the low pressure gauge indicates 98 kPa (1 kgf/cm^2, 14 psi) close the high pressure hand valve.

(c) Using a gas leak detector, check the system for leakage.

If leak is found, repair the faulty component or connection.

CAUTION:

Use the refrigerant recovery/ recycling machine to recover the refrigerant whenever replacing parts.

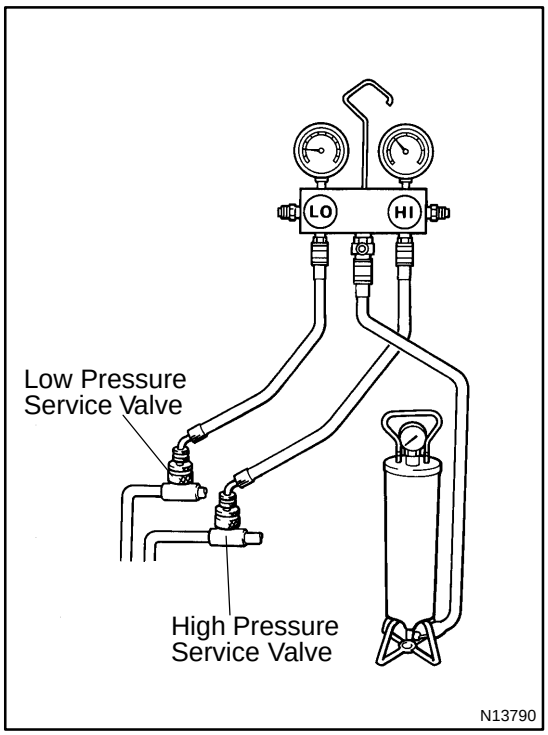

3. CHARGE REFRIGERANT INTO REFRIGERANT SYSTEM

If there is no leak after refrigerant leak check, charge the proper amount of refrigerant into refrigeration system.

CAUTION:

- **Never run the engine when charging the system through the high pressure side.**
- **Do not open the low pressure hand a valve when the system is being charged with liquid refrigerant.**

(a) Open the high pressure hand valve fully.

(b) Charge specified amount of refrigerant, then close the high pressure hand valve.

HINT:

A fully charged system is indicated by the sight glass being free of any bubbles.

4. REMOVE MANIFOLD GAUGE SET

(a) Close both hand valves of manifold gauge set.

(b) Disconnect the quick disconnect adapters from the service valves.

5. INSTALL CAPS TO SERVICE VALVES ON REFRIGERANT LINES

AC0Q2-01

LOCATION

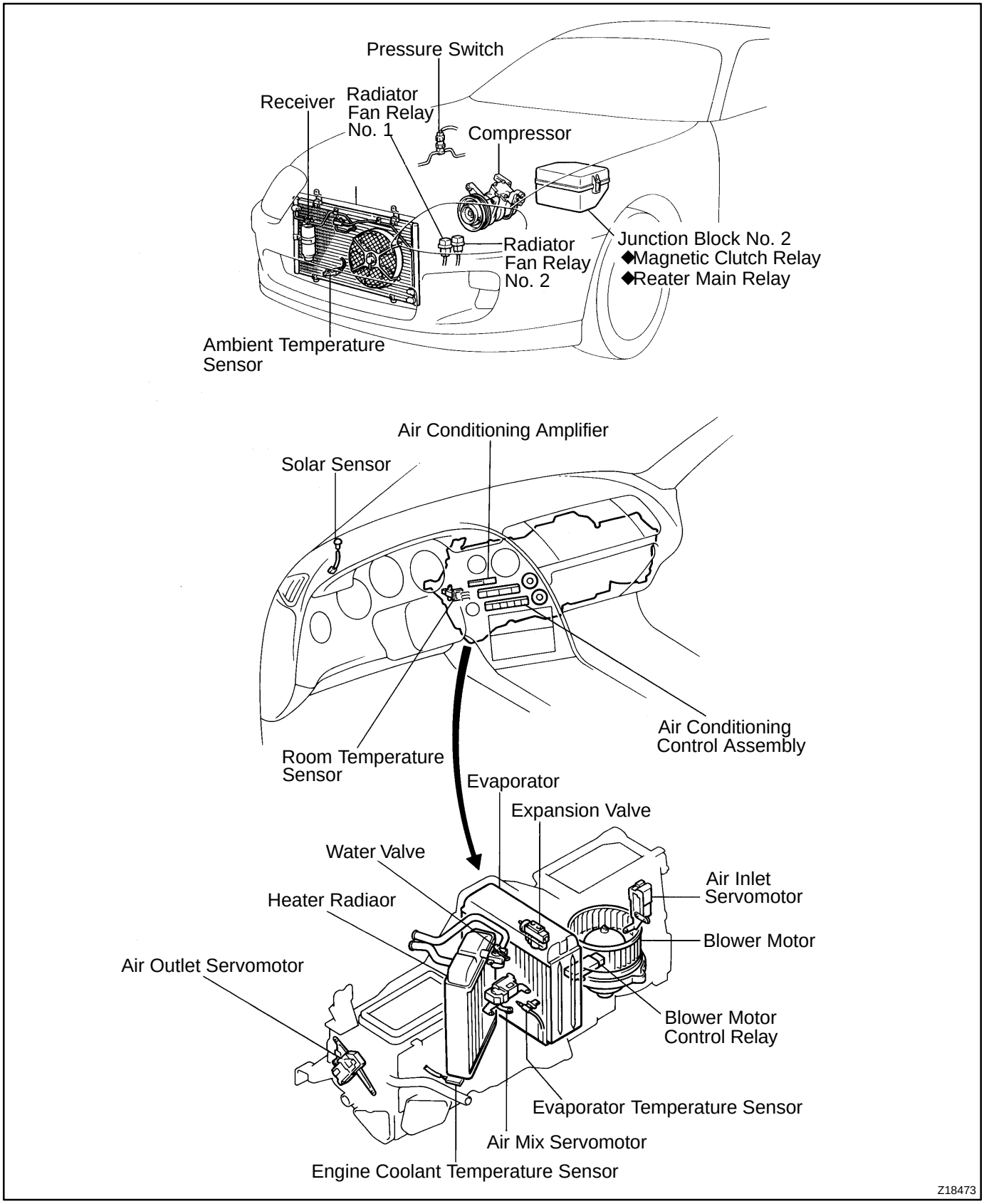

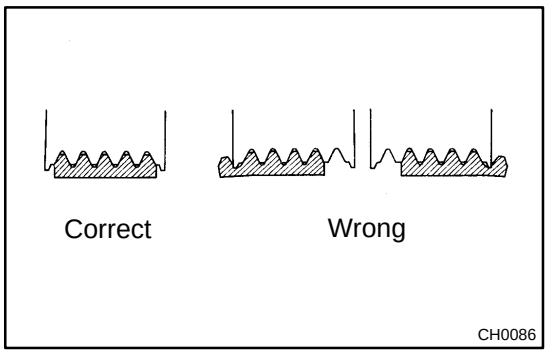

DRIVE BELT

AC0Q3-01

ON-VEHICLE INSPECTION

1. INSPECT DRIVE BELT'S INSTALLATION CONDITION

Check that the drive belt fits properly in the ribbed grooves.

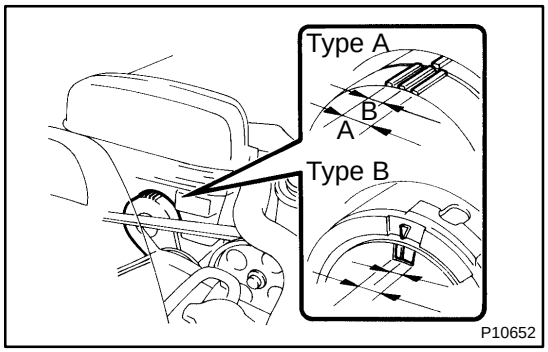

2. INSPECT DRIVE BELT TENTION

Check that the tension is within A range on the auto tensioner scale.

If the tension is not within the A range on the scale, replace the belt with a new one.

HINT:

When replacing the drive belt with a new one, the belt tension should be within the B range on the belt tensioner scale.

AC0Q4-01

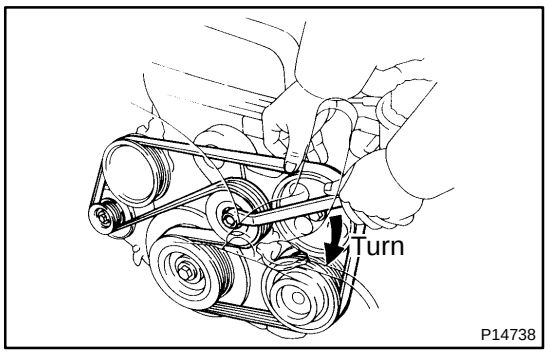

REMOVAL

REMOVE DRIVE BELT

Loosen the drive belt tension by turning the drive belt tensioner clockwise, and remove the drive belt.

AC0Q9-01

LOCATION

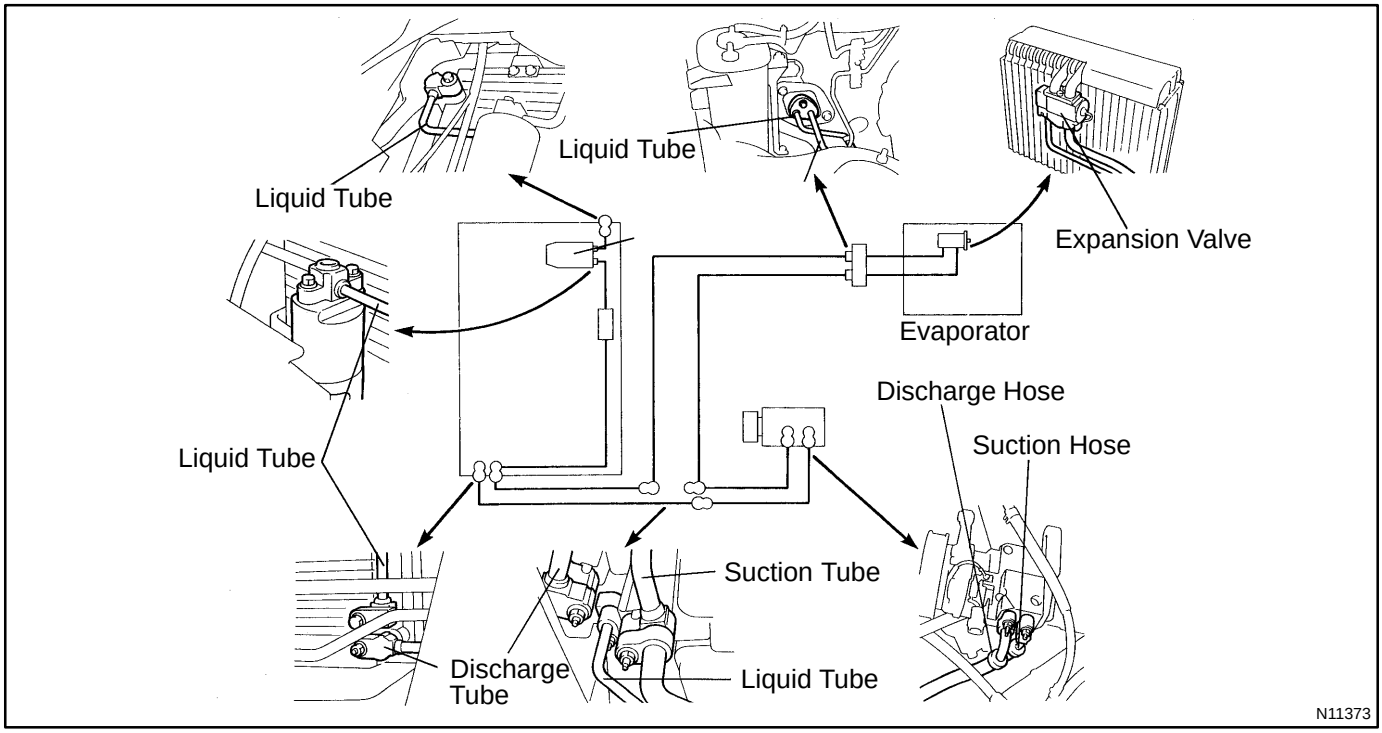

AC0QA-01

REPLACEMENT

1. DISCHARGE REFRIGERANT FROM REFRIGERATION SYSTEM

2. REPLACE FAULTY TUBE OR HOSE

NOTICE:

Cap the open fittings immediately to keep moisture or dirt out of the system.

3. TIGHTEN JOINT OF BOLT OR NUT AT SPECIFIED TORQUE

NOTICE:

Connections should not be torqued tighter than the specified torqued.

Part tightened	N·m	kgf·cm	ft·lbf
Receiver x Liquid tube	5.4	55	48 in.·lbf
Condencer x Discharge hose	10	100	7
Condenser x Liquid tube	10	100	7
Compressor x Discharge hose	10	100	7
Compressor x Suction hose	10	100	7
Evaporator x Expansion valve	5.4	55	48 in.·lbf
A/C unit x Liquidand suction tube	10	100	7
Discharge lines	10	100	7
Liquid lines	10	100	7
Suction lines	10	100	7

4. EVACUATE AIR IN REFRIGERATION SYSTEM AND CHARGEWITH REFRIGERANT

Specified amount: 700 ± 50 g (24.96 ± 1.76 oz.)

5. INSPECT FOR LEAKAGE OF REFRIGERANT

Using a gas leak detector, check for leakage of refrigerant.

6. INSPECT AIR CONDITIONING OPERATION

AIR CONDITIONING UNIT

AC0QB-02

COMPONENTS

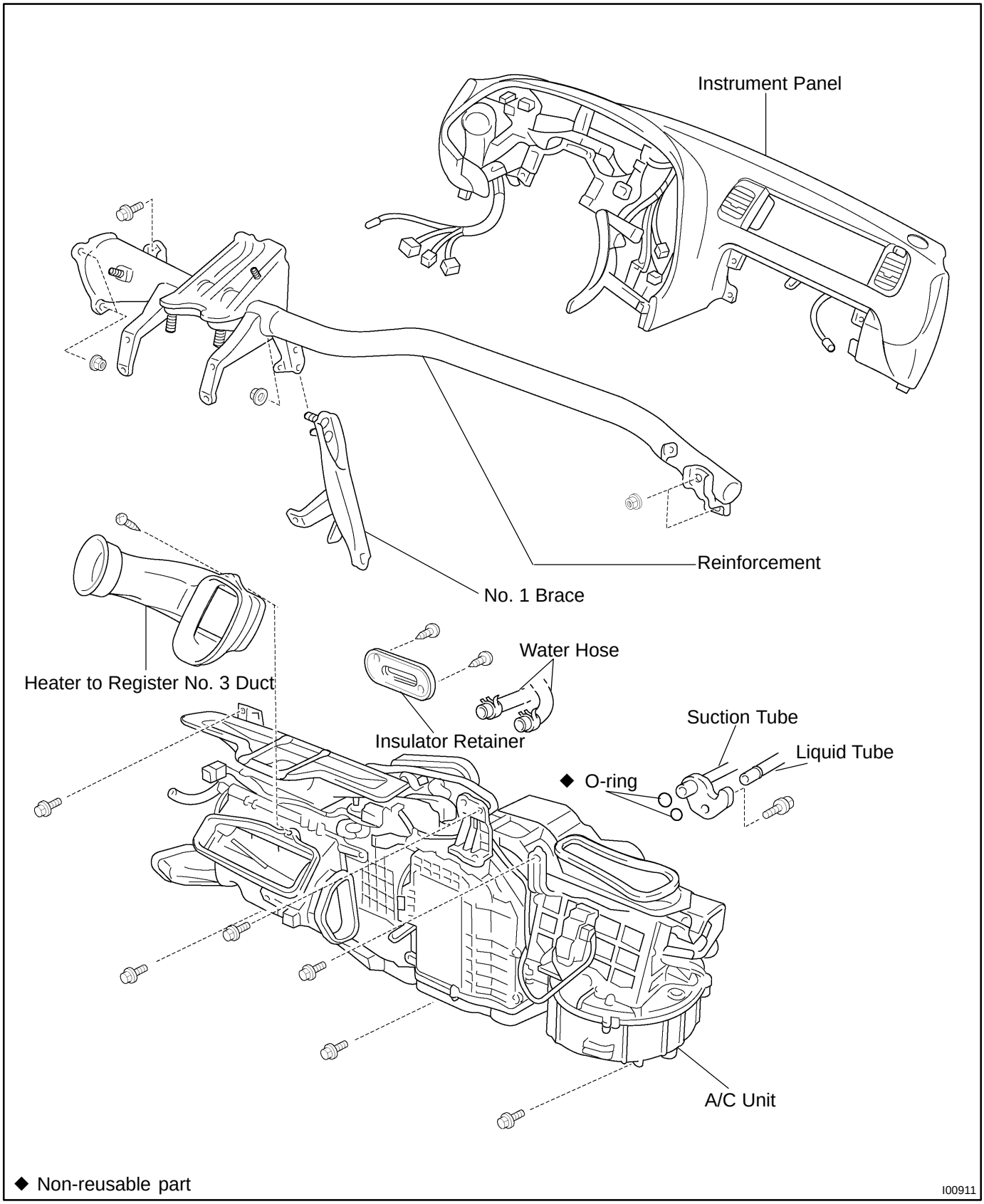

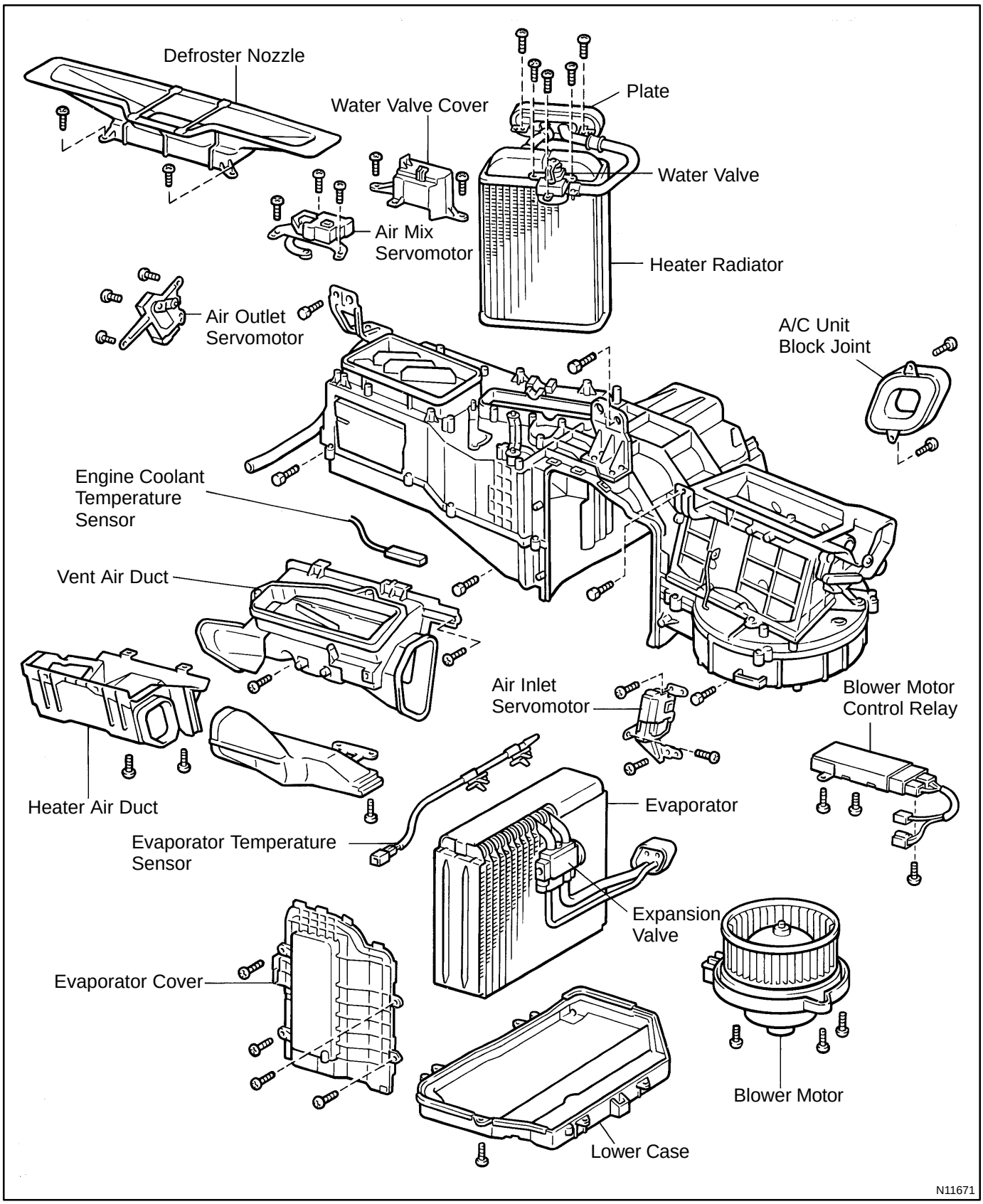
Defroster Nozzle
Water Valve Cover
Plate
Water Valve
Air Mix Servomotor
Heater Radiator
Air Outlet Servomotor
A/C Unit Block Joint
Engine Coolant Temperature Sensor
Vent Air Duct
Air Inlet Servomotor
Blower Motor Control Relay
Heater Air Duct
Evaporator
Evaporator Temperature Sensor
Expansion Valve
Evaporator Cover
Blower Motor
Lower Case
N11671

AC0QC-01

REMOVAL

1. DISCHARGE REFRIGERANT FROM REFRIGERANT SYSTEM

HINT:

At the time of installation, please refer to the following item.

Evacuate air from refrigeration system.

Charge system with the refrigerant and inspect for leakage of refrigerant.

Specified amount: 700 ± 50 g (24.96 ± 1.76 oz.)

2. DRAIN ENGINE COOLANT FROM RADIATOR

HINT:

It is not necessary to drain out all coolant.

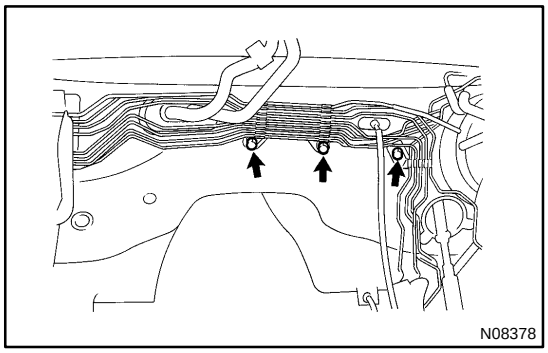

3. REMOVE THESE PARTS:

(a) Engine wire harness bracket mounting bolt

(b) Brake tube bracket mounting bolts

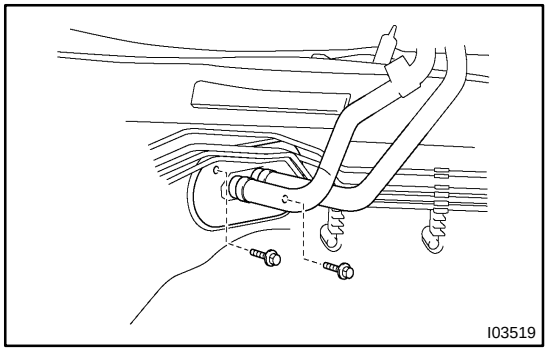

4. DISCONNECT WATER HOSE FROM HEATER RADIATOR PIPES

(a) Using priers, grip the claw of the hose clip and slide the clip along the hose.

(b) Disconnect the water hoses from heater radiator pipes.

5. REMOVE INSULATOR RETAINER

Remove the 2 bolts and the insulator retainer.

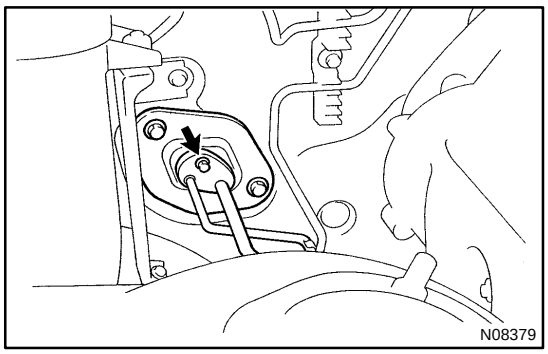

6. REMOVE LIQUID TUBE AND SUCTION TUBE

(a) Remove the ABS actuator.
(See page BR-70)

(b) Remove the bolt and slide the plate, then disconnect the both tubes.
Torque: 10 N·m (100 kgf·cm, 7 ft·lbf)

NOTICE:
Cap the open fittings immediately to keep moisture or dirt out of the system.

HINT:
At the time of installation, please refer to the following item.
Lubricante 2 new O-rings with compressor oil and install tubes.

7. REMOVE PLATE COVER

Remove the 2 bolts and the plate cover.

8. REMOVE INSTRUMENT PANEL AND REINFORCEMEN
(See page BO-50)

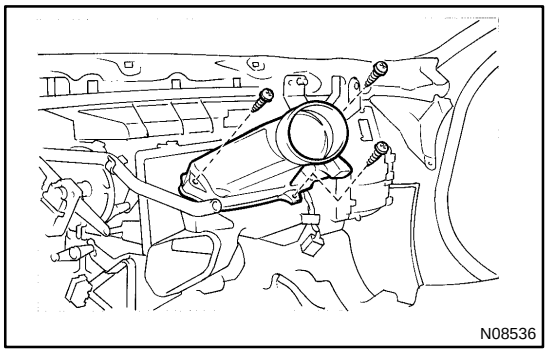

9. REMOVE HEATER TO REGISTER NO.3 DUCT

Remove the 3 screws and the heater to radister No.3 duct.

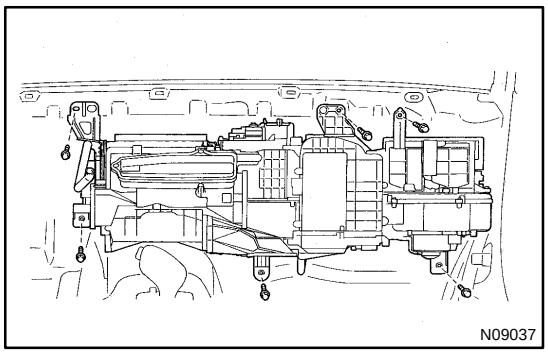

10. REMOVE A/C UNIT

(a) Disconnect connecters from the A/C unit.

(b) Remove the 6 bolts and the A/C unit.

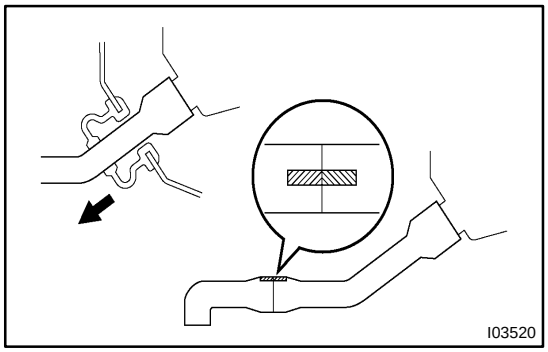

HINT:
At the time of installation, please refer to the following item.
Pull the drain hose of the A/C unit forward until the yellow paint on the hose is visible in the engine compartment.
Insert the drain hose into the engine compartment hose until the matchmarks are aligned.

AC0QD-02

DISASSEMBLY

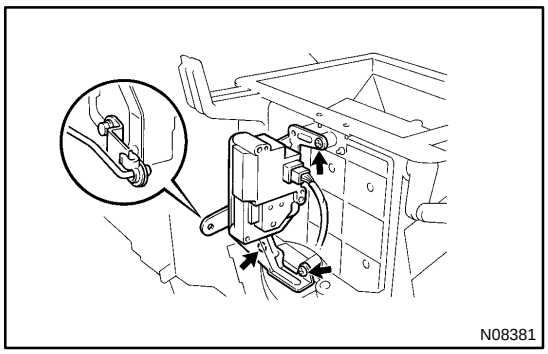
N08381

1. REMOVE AIR INLET SERVOMOTOR

(a) Disconnect the connector.
(b) Disconnect the control link.
(c) Remove the 3 screws and the air inlet servomotor.

2. REMOVE BLOWER MOTOR CONTROL RELAY

(a) Disconnect the connector.
(b) Remove the 3 screws and the blower motor control relay.

3. REMOVE BLOWER MOTER

(a) Disconnect the connector.
(b) Remove the 3 screws and blower motor.

4. REMOVE EVAPORATOR

(a) Remove the wire harness.
(b) Remove the foot air duct.
(c) Remove the A/C unit block joint.
(d) Remove the 6 screws and down and the lower cover.
(e) Remove the 4 screws and the evaporator cover.
(f) Pull out the evaporator.

HINT:
At the time of reassembly, please refer to the following item.
If the evaporator is replaced, add compressor oil to compressor.
Add 40cc (1.4 fl.oz)
Compressor oil: ND-OIL 8 or equivalent

(g) Pull out the evaporator temp.sensor from the evaporator.

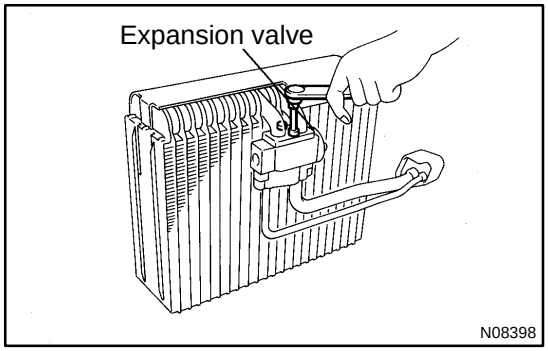

N08398

(h) Using a hexagon wrench, remove the 2 bolts and separate the evaporator and expansion valve.
Torque: 5.4 N·m (55 kgf·cm, 48 in.·lbf)

HINT:
At the time of reassembly, please refer to the following item.
Lubricate 4 new O-rings with compressor oil and install the tubes.

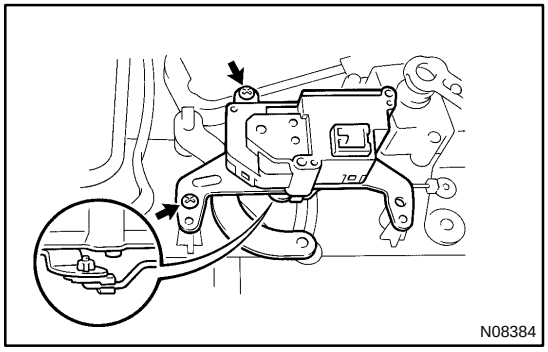
N08384

5. REMOVE AIR MIX SERVOMOTOR

(a) Remove the defroster duct.
(b) Remove the 3 screws and the water valve cover.
(c) Disconnect the connector.
(d) Disconnect the control link.
(e) Remove the screws and the air mix servomotor.

6. REMOVE HEATER RADIATOR AND WATER VALVE

(a) Remove the 2 screws and the plate.
(b) Remove the 2 screws and the clamp.
(c) Remove the 3 screws.
(d) Pull out the heater radiator with the water valve.
(e) Remove the 2 screws and water valve from the heater radiator.

7. REMOVE HEATER AIR DUCT

Remove the 2 screws and the defroster air duct.

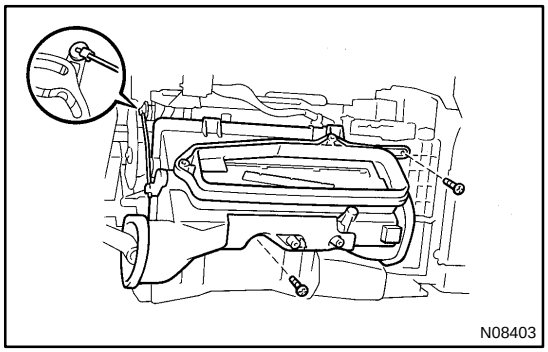

8. REMOVE AIR VENT DUCT

(a) Disconnect the control link.
(b) Remove the 2 screws and the vent air duct.

9. REMOVE ENGINE COOLANT TEMPERATURE SENSOR

(a) Disconnect the connector.
(b) After pulling off the clamp, pull out the sensor.

10. REMOVE AIR OUTLET SERVOMOTOR

(a) Disconnect the connector.
(b) Remove the 3 screws and the air outlet servomotor.

COMPRESSOR AND MAGNETIC CLUTCH

AC0QG-01

ON-VEHICLE INSPECTION

1. INSPECT COMPRESSOR FOR METALLIC SOUND

Check there is abnormal metallic sound from the compressor when the A/C switch is ON.

If abnormal metallic sound is heard, replace the compressor assembly.

2. INSPECT REFRIGERANT PRESSURE

(See page AC-3)

3. INSPECT VISUALLY FOR LEAKAGE OF REFRIGERANT

Using a gas leak detector, check for leakage of refrigerant.

If there is any leakage, replace the compressor assembly.

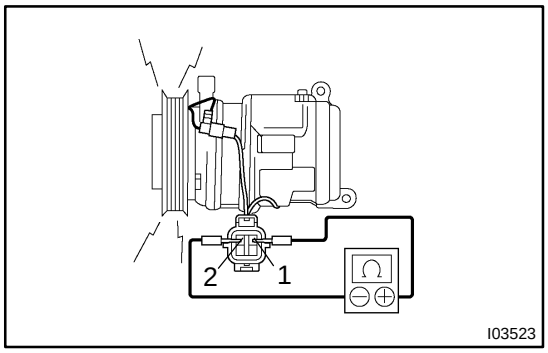

4. INSPECT COMPRESSOR LOCK SENSOR RESISTANCE

(a) Disconnect the connector.

(b) Measure resistance between terminals 1 and 2.

Standard resistance:

160 - 210 Ω at 20˚C (68˚F)

If resistance is not as specified, replace the sensor.

5. MAKE THESE VISUAL CHECKS:

(a) Leakage of grease from the clutch bearing

(b) Signs of oil on the pressure plate or rotor

6. INSPECT MAGNETIC CLUTCH BEARING FOR NOISE

(a) Start engine.

(b) Check for abnormal noise from the compressor when the A/C switch is OFF.

If abnormal noise is being emitted, replace the magnetic clutch.

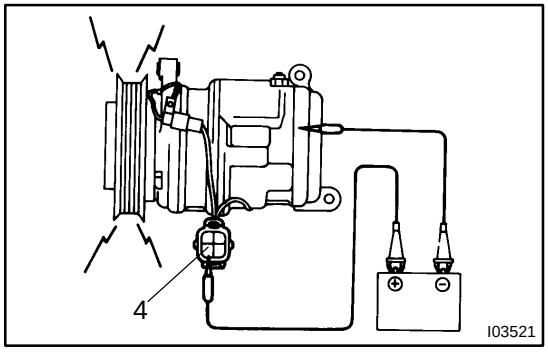

7. INSPECT MAGNETIC CLUTCH OPERATION

(a) Disconnect the connector.

(b) Connect the positive (+) lead from the battery to terminal 4 and the negative (-) lead to the body ground.

(c) Check that the magnetic clutch energized.

If operation is not as specified, replace the magnetic clutch.

AC2SS-01

COMPONENTS

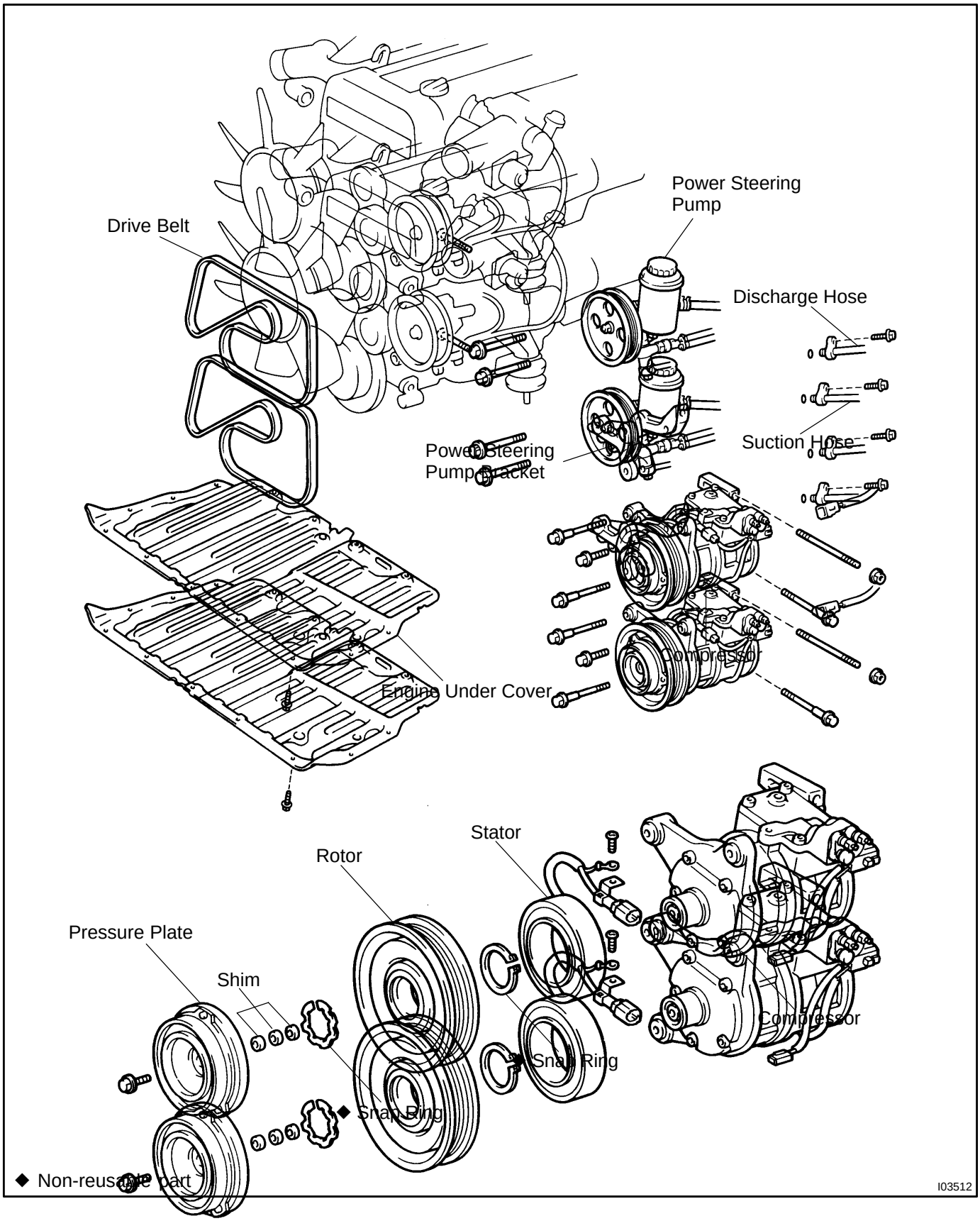

I03512

AC0QI-01

REMOVAL

1. **RUN ENGINE AT IDLE SPEED WITH A/C ON FOR APPROX. 10 MINUTES**
2. **STOP ENGINE**
3. **DISCONNECT NEGATIVE (-) TERMINAL CABLE FROM BATTERY**
4. **DISCHARGE REFRIGERANT FROM REFRIGERATION SYSTEM**
5. **REMOVE ENGINE UNDER COVER**
6. **REMOVE DRIVE BELT**
   (See page AC-16)

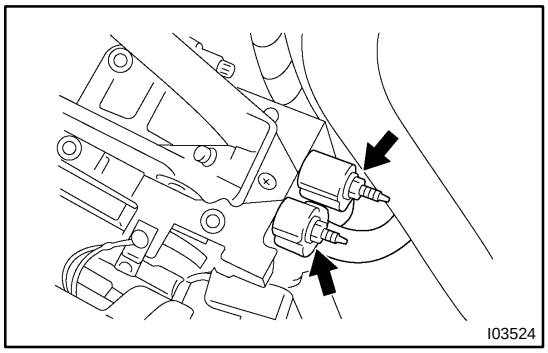

7. **DISCONNECT DISCHARGE AND SUCTION HOSES FROM COMPRESSOR**

Remove the 2 nuts and disconnect the both hoses.

NOTICE:

Cap the open fittings immediately to keep moisture or dirt out of the system.

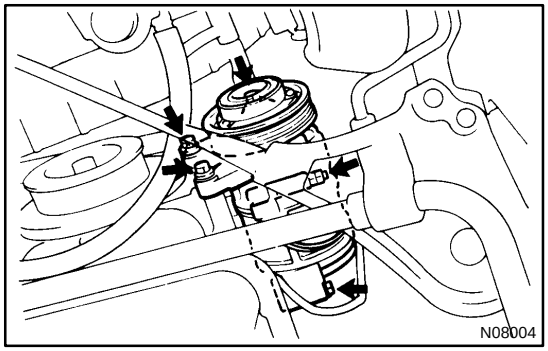

8. **REMOVE COMPRESSOR**

(a) Disconnect the connector.

(b) Remove the 4 bolts and nut.

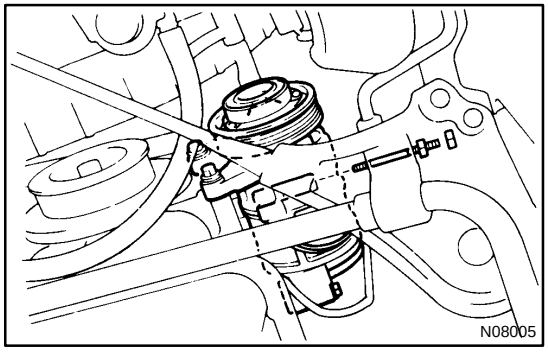

(c) Using a tory socket (E10), remove the stud bolt and compressor.

AC0QJ-01

DISASSEMBLY

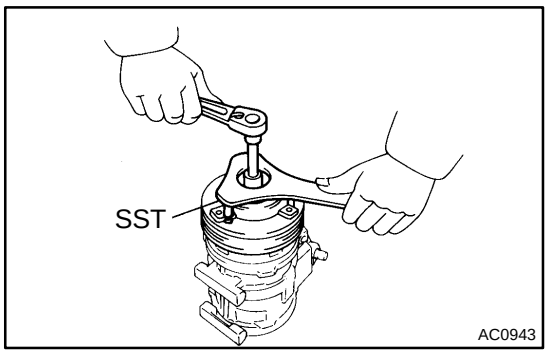

1. REMOVE PRESSURE PLATE

(a) Using SST and a socket wrench, remove the shaft bolt.
SST 07112-76060
Torque: 14 N·m (140 kgf·cm, 10 ft·lbf)

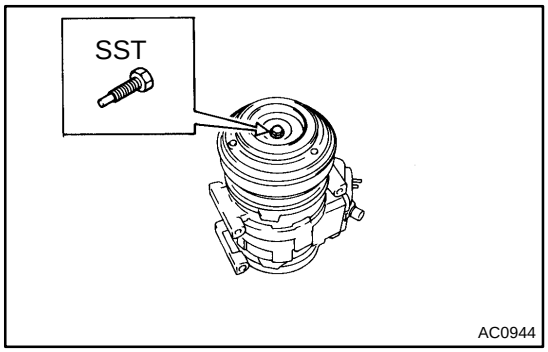

(b) Install SST on the pressure palate.
SST 07112-66040

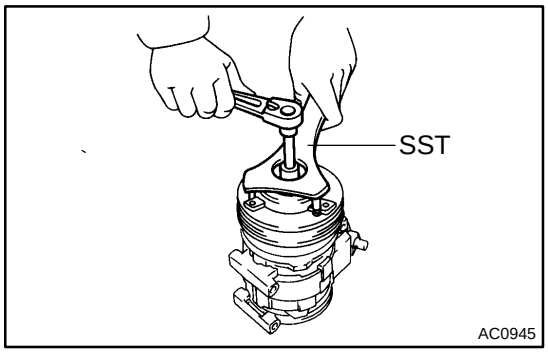

(c) Using SST and socket wrench, remove the pressure plate.
SST 07112-66040, 07112-76060

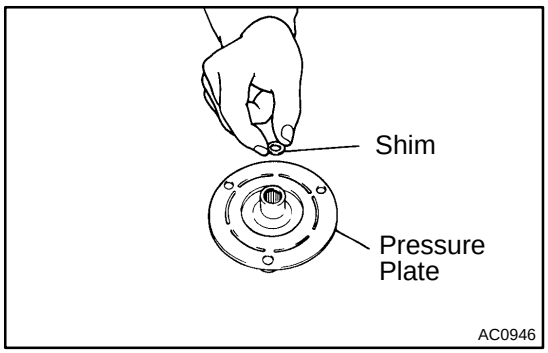

(d) Remove the shims from the pressure palate.

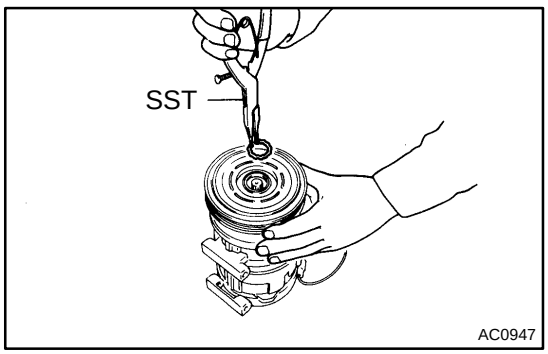

2. REMOVE ROTOR

(a) Using SST, remove the snap ring.
SST 07114-84020

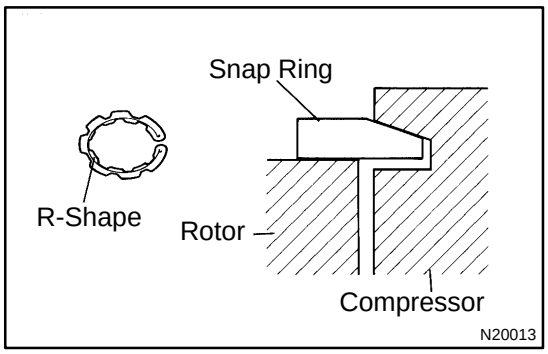

NOTICE:
At the time of reassembly, please refer to the following item.
The snap ring should be installed so that beveled side faces up.

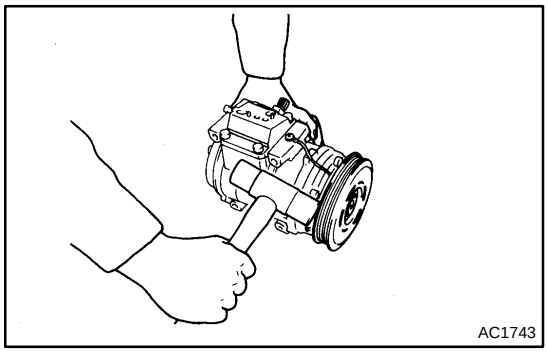

(b) Using a plastic hammer, tap the rotor off the shaft.

NOTICE:
Be careful not to damage the pulley when tapping on the rotor.

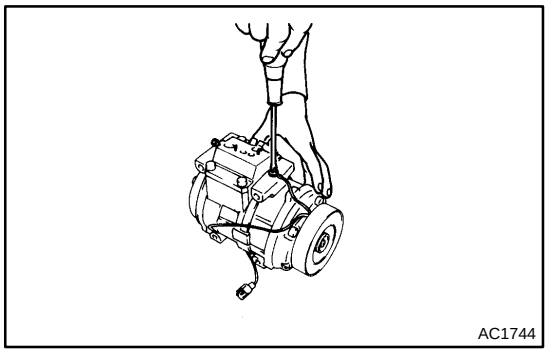

3. REMOVE STATOR

(a) Disconnect the stator lead wire from the compressor housing.

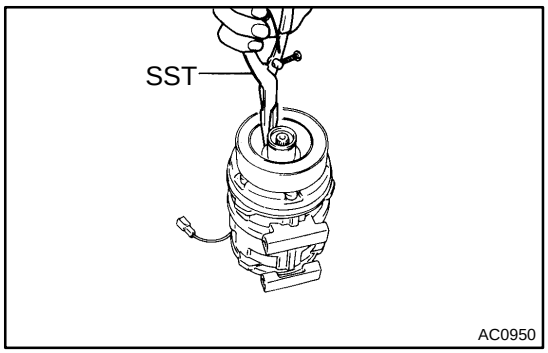

(b) Using SST, remove the snap ring.
SST 07114-84020

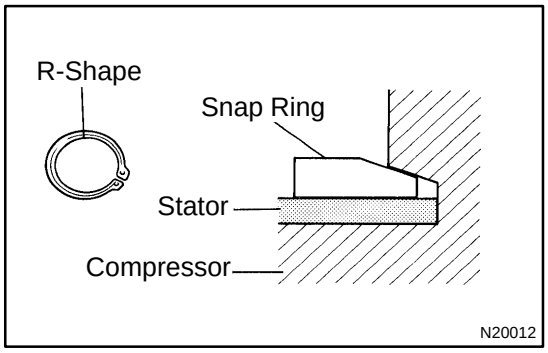

NOTICE:
At the time of reassembly, please refer to the following item.
The snap ring should be installed so that its beveled side faces up.

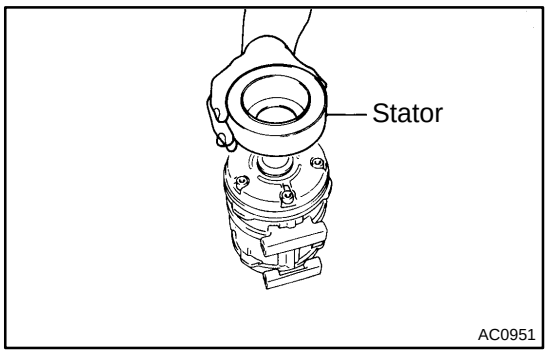

(c) Remove the stator.

AC0QL-01

INSTALLATION

1. INSTALL COMPRESSOR

(a) Install the stud bolt.
Torque: 26 N·m (265 kgf·cm, 19.2 ft·lbf)

(b) Install the compressor with 4 bolts and nut.
Torque: 52 N·m (530 kgf·cm, 38.3 ft·lbf)

(c) Connect the magnetic clutch connector.

(d) Install the engine under cover.

2. CONNECT DISCHARGE AND SUCTION HOSES

Connect the both hoses with 2 bolts.
Torque: 10 N·m (100 kgf·cm, 7 ft·lbf)

NOTICE:

Hose should be connected immediately after the caps have been removed.

HINT:

Lublicate 2 new O-rings with compressor oil and install the hoses.

3. INSTALL POWER STEERING PUMP SET BOLTS
Torque: 58 N·m (590 kgf·cm, 42 ft·lbf)

4. INSTALL DRIVE BELT
(See page AC-17)

5. CONNECT NEGATIVE (-) TERMINAL CABLE TO BATTERY

6. EVACUATE AIR IN REFRIGERATION SYSTEM AND CHARGE EITH REFRIGERANT
Specified amount: 700 ± 50 g (24.96 ± 1.76 oz.)

7. INSPECT FOR LEAKAGE OF REFRIGERANT

Using a gas leak detecter, check for leakage of refrigerant.

If there is leakage, check the tightening torque at the joints.

8. INSPECT A/C OPERATION

AC0QN-01

REMOVAL

1. DISCHARGE REFRIGERANT FROM REFRIGERATION SYSTEM

HINT:

At the time of installation, please refer to the following item.

Evacuate air from refrigeration system.

Charge system with refrigerant and inspect for leakage of refrigerant.

Specified amount: 700 ± 50 g (24.96 ± 1.76 oz.)

2. REMOVE FRONT BUMPER (See page BO-4)

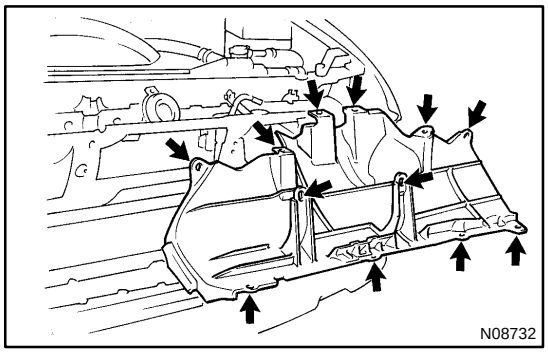

3. REMOVE RADIATOR SUPPORT UPPER SEAL

Remove the 12 clips and radiator support upper seal.

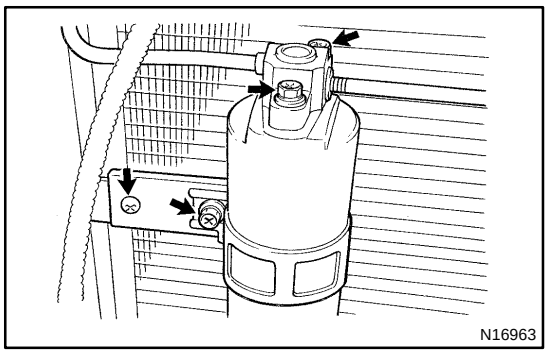

4. REMOVE LIQUID TUBES FROM RECEIVER

Remove the 2 bolts and both tubes from the receiver.

Torque: 5.4 N·m (55 kgf·cm, 48 in.·lbf)

NOTICE:

Cap the open fittings immediately to keep moisture or dirt out of the system.

HINT:

At the time of installation, please refer to the following item.

Lubricate 2 new O-rings with compressor oil and install the tube.

5. REMOVE RECEIVER

Remove the holder bolt and pull the receiver downward from the receiver holder.

HINT:

At the time of installation, please refer to the following item.

If receiver is replaced, add compressor oil to receiver.

Add 10 cc (0.34 fl.oz.)

Compressor oil: ND-OIL 8 or equivalent

6. REMOVE RECEIVER HOLDER

Remove the screw and holder.

AC0QQ-01

REMOVAL

1. DISCHARGE REFRIGERANT FROM REFRIGERATION SYSTEM

HINT:

At the time of installation, please refer to the following item.

Evacuate air from refrigeration system.

Charge system with refrigerant and inspect for leakage of refrigerant.

Specified amount: 700 ± 50 g (24.96 ± 1.76 oz.)

2. REMOVE BATTERY

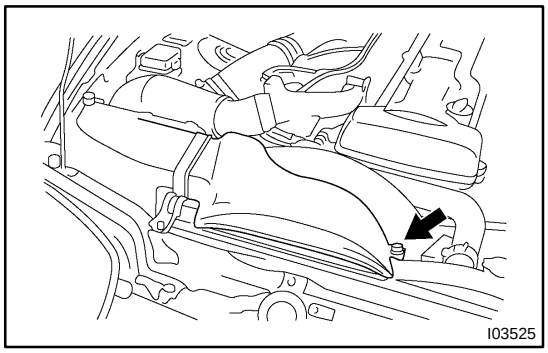

3. REMOVE AIR CLEANER DUCT

Remove the bolt and the air cleaner duct.

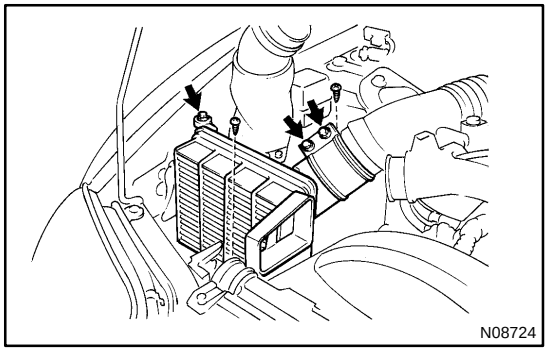

4. REMOVE AIR CLEANER

(a) Remove the air cleaner cover.
(b) Remove the air cleaner hose.
(c) 2JZ-GTE Engine Models:
Remove the No.1 air hose.
(d) Remove the 3 bolts and screw.
(e) Remove the air cleaner.

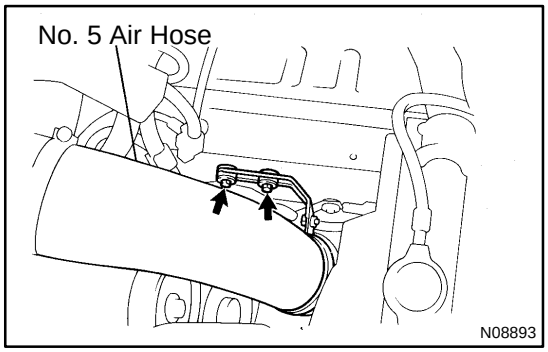

5. 2JZ-GTE Engine Models: REMOVE No.5 AIR HOSE CLAMP

(a) Remove the 2 bolts and clamp.
(b) Remove the air cleaner.

6. REMOVE THESE PARTS:

(a) Front bumper (See page BO-4)
(b) Radiator support upper seal (See page AC-40)
(c) Receiver and holder (See page AC-40)

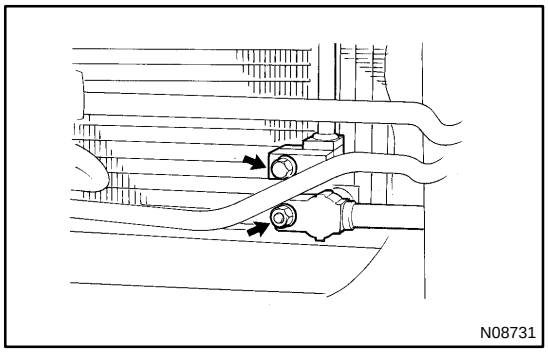

7. DISCONNECT LIQUID TUBE AND DISCHARGE TUBES

Remove the 3 bolts and disconnect the both tubes.

Torque: 10 N·m (100 kgf·cm, 7 ft·lbf)

NOTICE:

Cap the open fittings immediately to keep moisture or dirt out of the system.

HINT:

At the time of installation, please refer to the following item.

Lubricate 3 new O-rings with compressor oil and install the tubes.

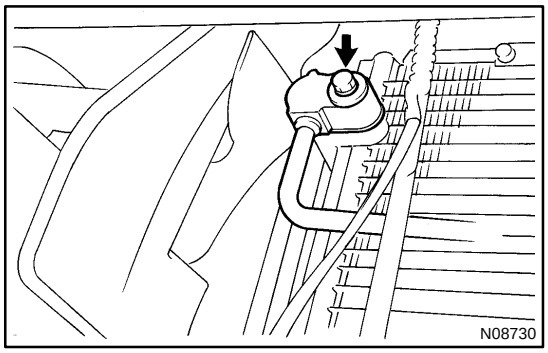

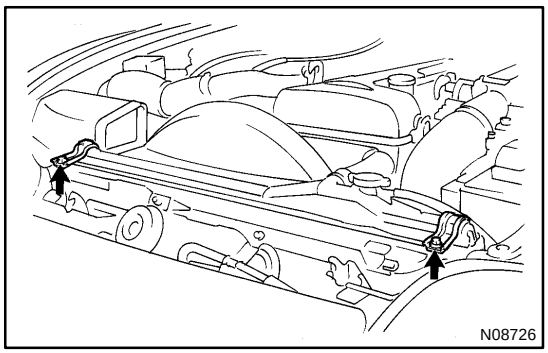

8. REMOVE CONDENSER

(a) Remove the 2 radiator upper mountings.

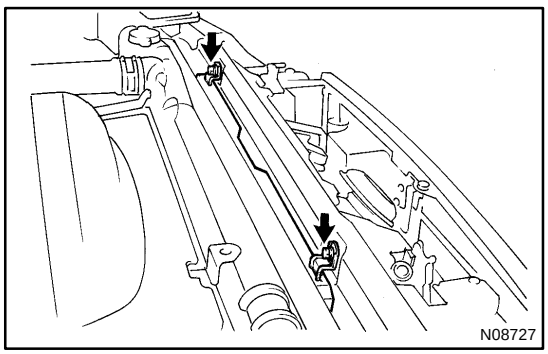

(b) Push the radiator toward engine.
(c) Remove the condenser upper mountings.

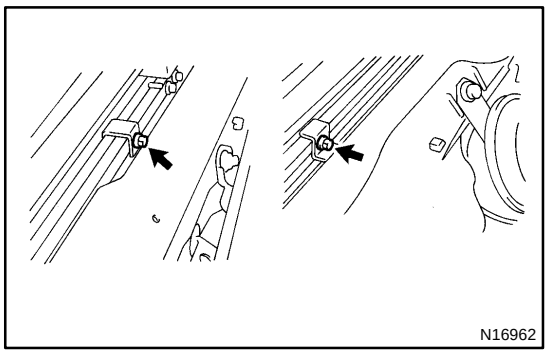

(d) Push the condenser toward radiator and remove the liquid tube piping clamp.
Torque: 4.1 N·m (42 kgf·cm, 36 in.·lbf)

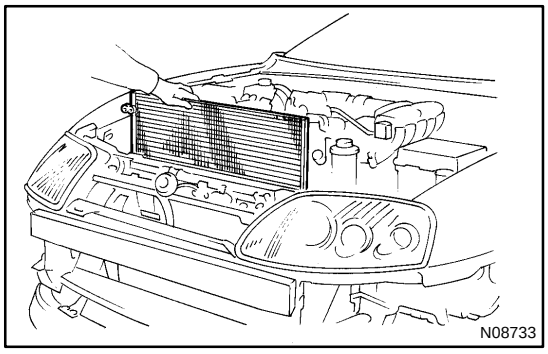

(e) Push the condenser toward engine and pull it upward.
HINT:
At the time of installation, please refer to the following item.
If condenser is replaced, add compressor oil to the condenser.
Add 40 cc (1.4 fl.oz.)
Compressor oil: ND-OIL 8 or equivalent

EVAPORATOR

AC0QS-02

REMOVAL

1. DISCHARGE REFRIGERANT IN REFRIGERATION SYSTEM

HINT:

At the time of installation, please refer to the following item.

Evacuate air from refrigeration system.

Charge system with refrigerant and inspect for leakage of refrigerant.

Specifieed amount: 700 ± 50 g (24.96 ± 1.76 oz.)

2. REMOVE ABS ACTUATOR (See page BR-70)

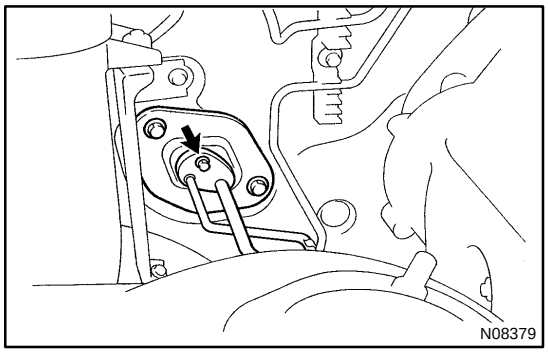

3. DISCONNECT LIQUID TUBE AND SUCTION TUBE FROM A/C UNIT

Torque: 10 N·m (100 kgf·cm, 7 ft·lbf)

NOTICE:

Cap the open fittings immediately to keep moisture or dirt out of the system.

HINT:

At the time of installation, please refer to the following item.

Lubricate 2 new O-rings with compressor oil and install the tubes.

4. REMOVE THESE PARTS:

(a) Glove compartment parts

(b) Heater to register No.4 duct

(c) Front door scuff plate RH

(d) Floor carpet

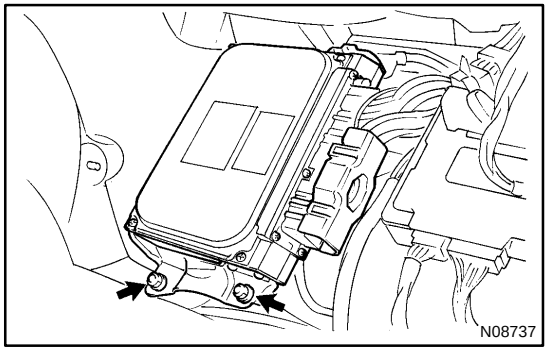

5. REMOVE ECM

(a) Slide the floor carpet backward.

(b) Remove the 2 nuts and the ECM cover.

(c) Disconnect the connector.

(d) Remove the 2 nuts and the ECM.

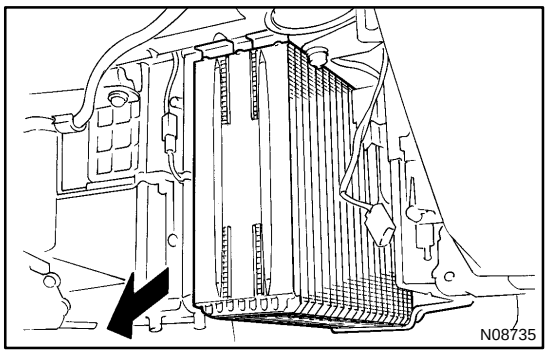

6. REMOVE EVAPORATOR

(a) Remove the 6 screws and the lower cover.

(b) Remove the 4 screws and the evaporator cover.

(c) Remove the evaporator.

HINT:

At the time of the installation, please refer to the following item.

If evaporator is replaced, add compressor oil to evaporator.

Add 40 cc (1.4 fl.oz.)

Compresser oil: ND-OIL 8 or equivalent

HEATER RADIATOR

AC0QV-01

REMOVAL

1. REMOVE AIR CONDITIONING UNIT
(See page AC-25)

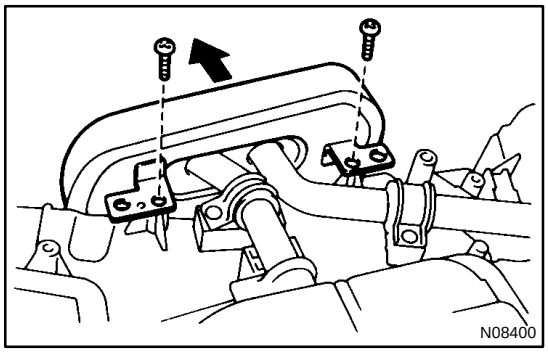

2. REMOVE HEATER RADIATOR AND WATER VALVE

(a) Remove the 2 screws and the plate.

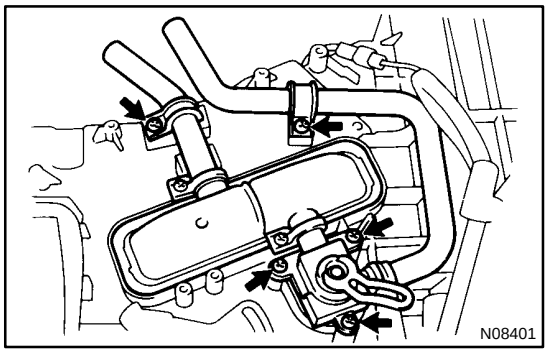

(b) Remove the 2 screws and the clamp.

(c) Remove the 3 screws.

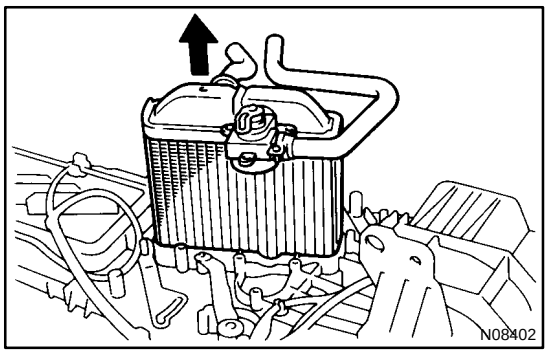

(d) Pull out the heator with the water valve.

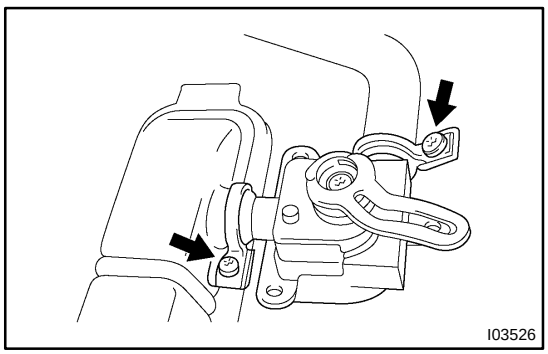

(e) Remove the 2 screws and water valve from the heater radiator.

EXPANSION VALVE

AC0QY-01

ON-VEHICLE INSPECTION

1. CHECK QUANTITY OF GAS DURING REFRIGERATION CYCLE

2. SET ON MANIFOLD GAUGE SET

(See page AC-18)

3. RUN ENGINE

(a) Run the engine at 1,500 rpm for at least 5 minutes.

(b) Then check that the high pressure reading is 1.37 - 1.57 MPa (14 - 16 kgf/cm^2, 199 - 228 psi).

4. CHECK EXPANSION VALVE

If the expansion valve is faulty, the low pressure reading will drop to 0 kPa (0 kgf/cm^2, 0 psi).

HINT:

When the low pressure drops to 0 kPa (0 kgf/cm^2, 0 psi), check the receiver's IN and OUT sides for no temperature difference.

AC0QZ-01

REMOVAL

1. REMOVE EVAPORATOR

(See page AC-47)

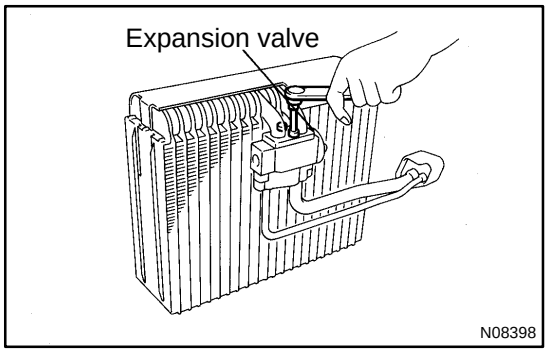

2. REMOVE EXPANSION VALVE

Using a hexagon wrench, remove the 2 bolts and separate the evaporator and expansion valve.

Torque: 5.4 N·m (55 kgf·cm, 48 in.·lbf)

HINT:

At the time of installation, please refer to the following item.

Lubricate 4 new O-rings with compressor oil and install the tubes.

WATER VALVE

AC0R1-01

REMOVAL

1. DRAIN ENGINE COOLANT FROM RADIATOR

HINT:

It is not to drain out all coolant.

2. REMOVE INSTRUMENT PANEL
(See page BO-54)

3. REMOVE AIR MIX SERVOMOTOR
(See page AC-65)

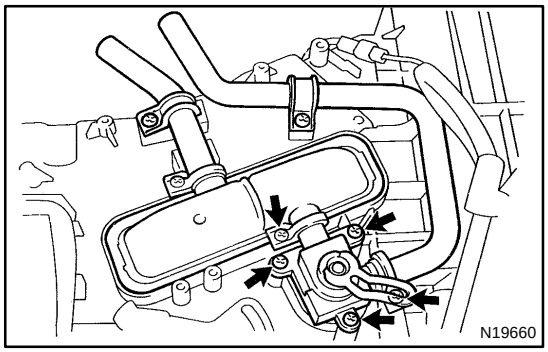

4. REMOVE WATER VALVE

Remove the 5 screws and water valve.

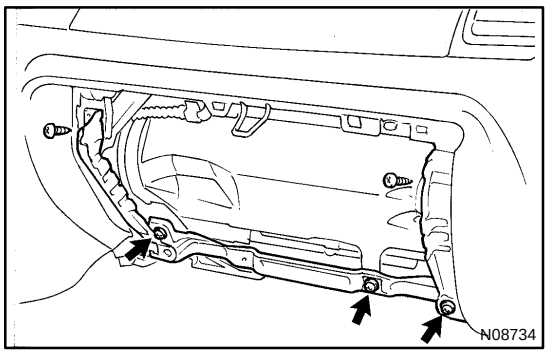

BLOWER MOTOR

AC0R3-01

REMOVAL

1. REMOVE THESE PARTS:

(a) Glove compartment parts
(See page BO-54)
(b) Heater to registor No.4 duct
(c) Front door scuff plate RH
(d) ECM cover

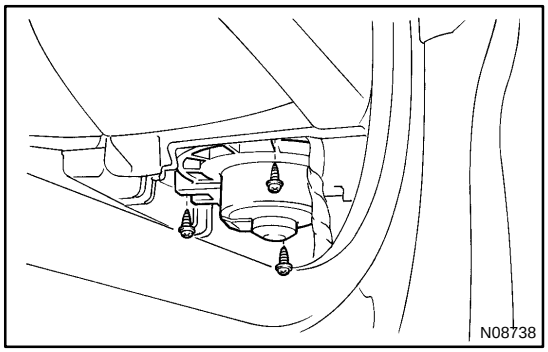

2. REMOVE BLOWER MOTOR

(a) Slide the floor carpet backward.
(b) Disconnect the connector.
(c) Remove the 3 screws and the blower motor.

BLOWER MOTOR CONTROL RELAY

AC0R6-01

REMOVAL

1. REMOVE BLOWER MOTOR
(See page AC-59)

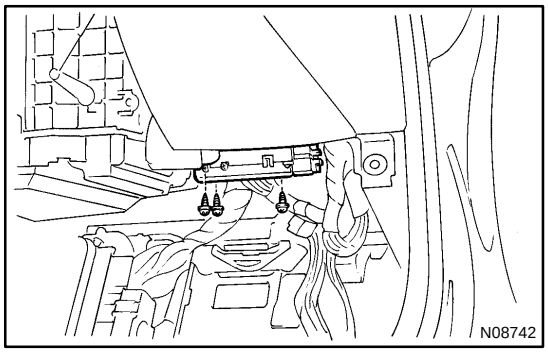

2. REMOVE BLOWER MOTOR CONTROL RELAY

(a) Disconnect the connector.

(b) Remove the 3 screws and the blower motor control relay.

SERVOMOTOR

AC0R9-01

REMOVAL

1. REMOVE AIR INLET SERVOMOTOR

(a) Remove instrument panel.
(See page BO-54)

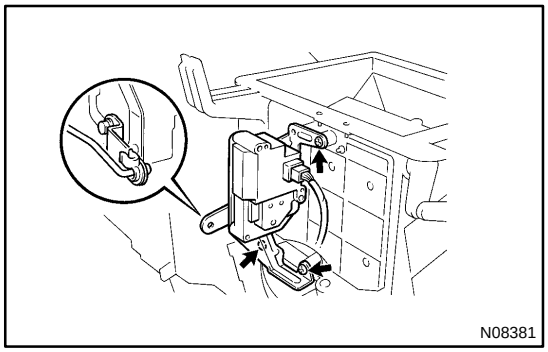

(b) Remove air inlet servomotor.
(1) Disconnect the connector.
(2) Disconnect the control link.
(3) Remove the 3 screws and the air inlet servomotor.

2. REMOVE AIR MIX SERVOMOTOR

(a) Remove instrument panel.
(See page BO-54)

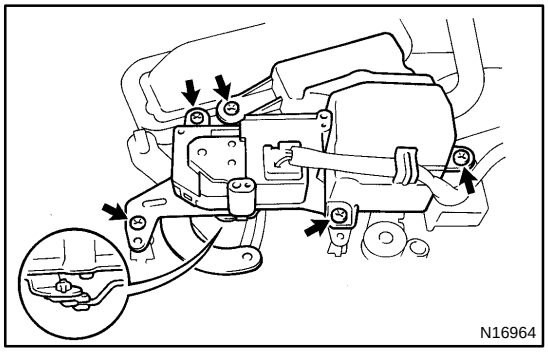

(b) Remove air mix servomotor.
(1) Remove the defroster duct.
(2) Remove the 3 screws and the water valve cover.
(3) Disconnect the connector.
(4) Remove the 3 screws and the servomotor then disconnect the control link.

3. REMOVE AIR OUTLET SERVOMOTOR

(a) Remove instrument panel.
(See page BO-54)

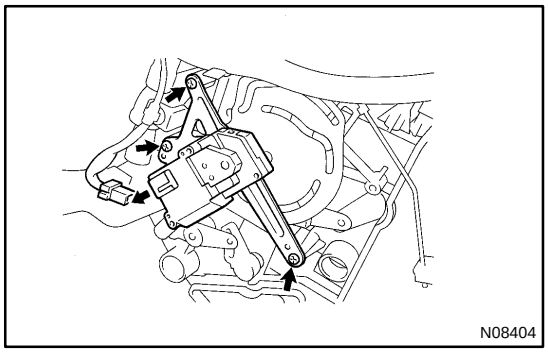

(b) Remove air outlet servomotor.
(1) Disconnect the connector.
(2) Remove the 3 screws and the air outlet servomotor.

SENSOR

AC0RC-01

REMOVAL

1. REMOVE SOLAR SENSOR

(a) Remove instrument panel.
(See page BO-54)

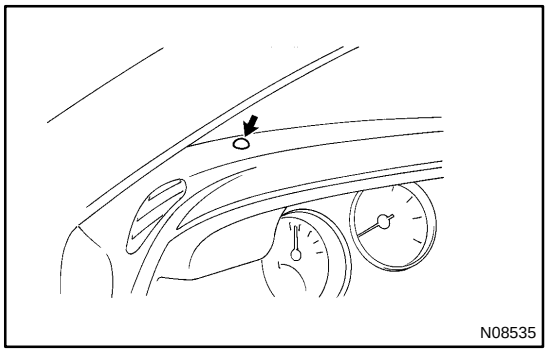

(b) Remove solar sensor.
Disconnect the connector pull the solar sensor upward from instrument panel.

2. REMOVE ROOM TEMPERATURE SENSOR

(a) Remove center cluster panel.
(See page BO-50)

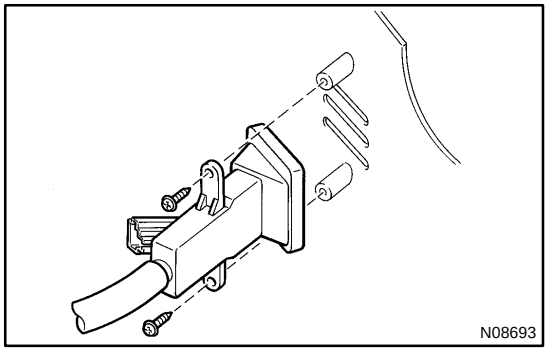

(b) Remove room temperature sensor.
(1) Disconnect the connector.
(2) Remove the aspirator hose.
(3) Remove the 2 screws and the room temperature sensor.

3. REMOVE AMBIENT TEMPERATURE SENSOR

Remove ambient temperature sensor.
(1) Remove the ambient temperature sensor from the bumper reinforcement.
(2) Disconnect the connector.

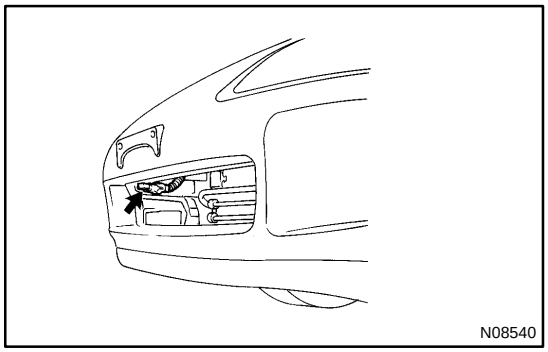

4. REMOVE ENGINE COOLANT TEMPERATURE SENSOR

(a) Remove air conditioning unit.
(See page AC-25)

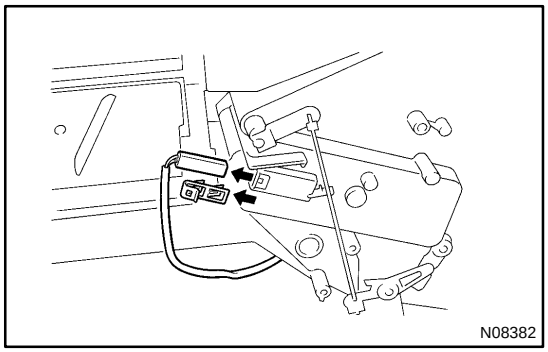

(b) Remove engine coolant temperature sensor.
(1) Disconnect the connector.
(2) After pulling off the clamp, pull out the sensor.

5. REMOVE EVAPORATOR TEMPERATURE SENSOR

(a) Remove evaporator.
(See page AC-47)

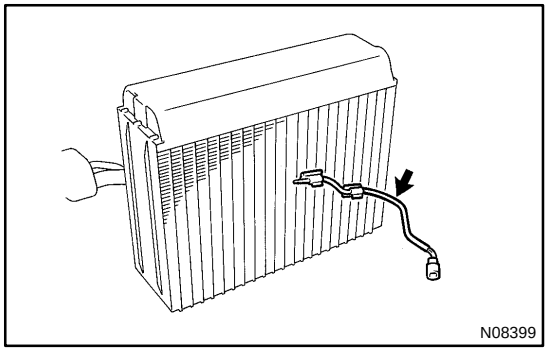

(b) Remove evaporator temperature sensor.
Pull out the evaporator temperature sensor from the evaporator.

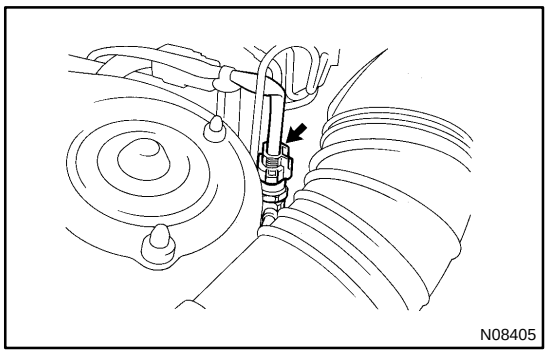
N08405

PRESSURE SWITCH

AC0RF-02

ON-VEHICLE INSPECTION

1. **SET ON MANIFOLD GAUGE SET**
   (See page AC-18)
2. **DISCONNECT CONNECTOR FROM PRESSURE SWITCH**
3. **RUN ENGINE AT APPROX. 2,000 RPM**

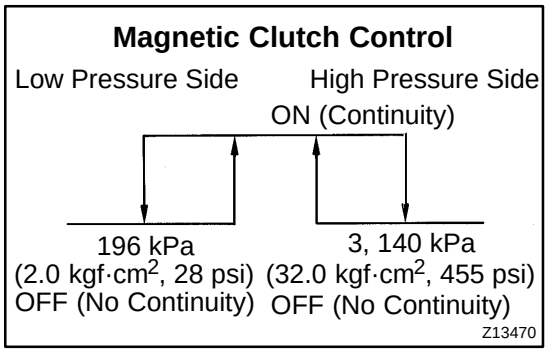

4. **Magnetic Clutch Control:**
   INSPECT PRESSURE SWITCH OPERATION
   ( ): 2JZ-GTE

(a) Connect the positive (+) lead from the ohmmeter to terminal 4 (1) and the negative (-) lead to terminal 1 (2).

(b) Check continuity between terminals when refrigerant pressure is changed, as shown in the illustration.

If operation is not as specified, replace the pressure switch.

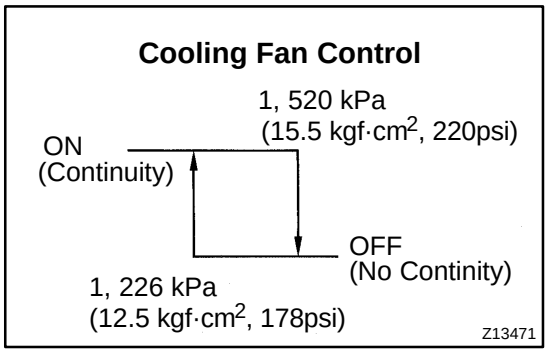

5. **2JZ-GTE Engine Models:**
   Condenser Fan Control:
   INSPECT PRESSURE SWITCN OPERATION

(a) Connect the positive (+) lead from the ohmmeter to terminal 2 and the negative (-) lead to terminal 3.

(b) Check continuity between terminals when refrigerant pressure is changed, as shwn in the illustration.

If operation is not as specified, replace the pressure switch.

6. **STOP ENGINE AND SET OFF MANIFOLD GAUGE SET**
7. **CONNECT CONNECTOR TO PRESSURE SWITCH**

AC0RG-01

REMOVAL

1. DISCONNECT REFRIGERANT FROM REFRIGERATION SYSTEM

HINT:

At the time of installation, please refer to the following item.

Evacuate air from refrigeration system.

Charge system with refrigerant and inspect for leakage of refrigerant.

Specified amount: 700 ± 50 g (24.69 ± 1.76 oz.)

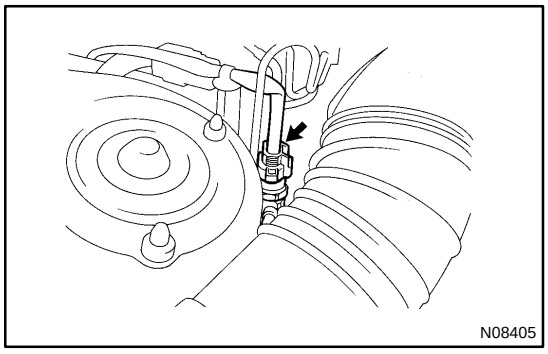

2. REMOVE PRESSURE SWITCH FROM LIQUID TUBE

Disconnect the connector and remove the pressure switch.

Torque: 10 N·m (100 kgf·cm, 7 ft·lbf)

HINT:

- Lock the switch mounted on the tube with an open end wrench, being careful not to deform the tube and remove the switch.
- At the time of installation, please refer to the following item.
  Lubricate a new O-ring with the compressor oil and install the switch.

AIR CONDITIONING CONTROL ASSEMBLY

AC0RK-01

REMOVAL

1. REMOVE CENTER CLUSTER PANEL
(See page BO-50)

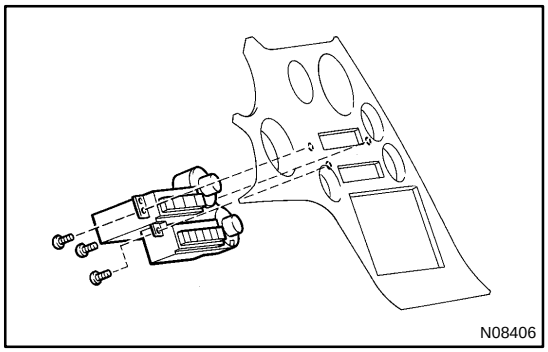

2. REMOVE AIR CONDITIONING CONTROL ASSEMBLY

(a) Disconnect the connector.

(b) Remove the 3 screws and air conditioning control assembly.

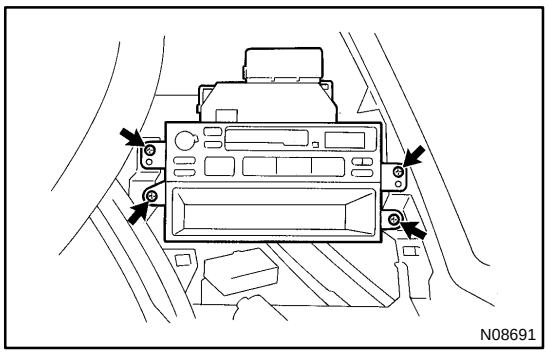

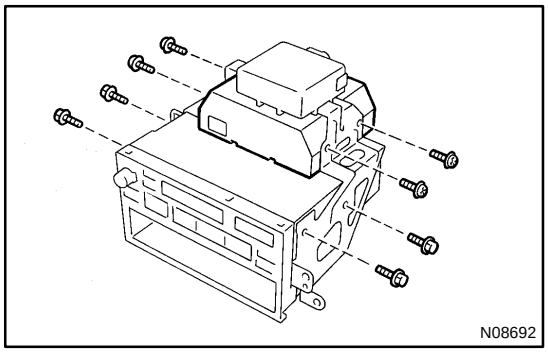

AIR CONDITIONING AMPLIFIER

AC0RN-01

REMOVAL

1. REMOVE CENTER CLUSTER PANEL
(See page BO-50)

2. REMOVE RADIO WITH AIR CONDITIONING AMPLIFIER

(a) Remove the 4 screws and radio with the air conditioning amplifier.

(b) Disconnect the connectors.

3. REMOVE AIR CONDITIONING AMPLIFIER FROM RADIO

(a) Remove the 4 screws and the 4 bolts.

(b) Remove the air conditioning amplifier from radio.

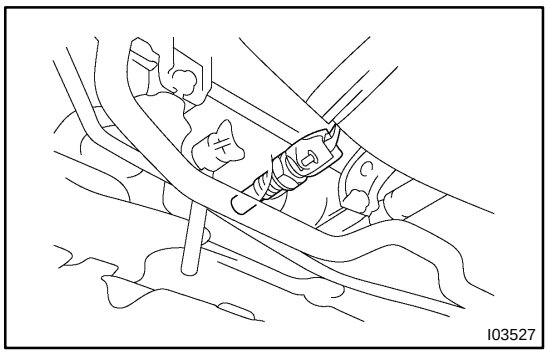

ENGINE COOLANT TEMPERATURE (ECT) SWITCH

AC0RQ-01

REMOVAL

1. REMOVE ENGINE UNDER COVER

2. DRAIN ENGINE COOLANT

HINT:

It is not necessary to drain out all coolant.

3. REMOVE SWITCH

(a) Disconnect the connector.

(b) Remove the switch.

Torque: 7.4 N·m (75 kgf·cm, 65 in.·lbf)

HINT:

At the time of installation, please refer to the following item.

Lubricate a new O-ring with soapy water and install the switch.

AC0RR-01

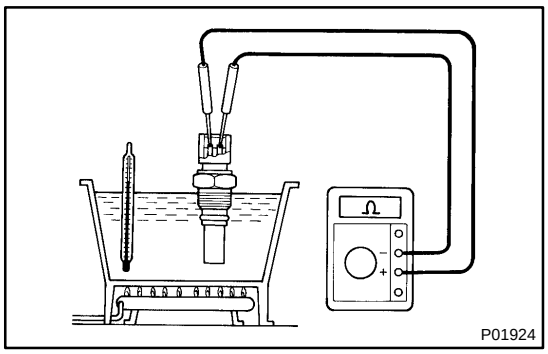

INSPECTION

INSPECT ECT SWITCH CONTINUITY

(a) Using an ohmmeter, check the no continuity exists between the terminals when the coolant temperature is a above 100˚C (212˚F).

If there is continuity, replace the switch.

(b) Using an ohmmeter, check the continuity existsbetween the terminals when the coolant temperature is below 91˚C (196˚F).

If there is no continuity, replace the switch.

BODY ELECTRICAL SYSTEM

BE0DL-01

PRECAUTION

Take care to observe the doing precautions when performing inspections or removal and replacement of body electrical related parts.

1. HEADLIGHT SYSTEM

Halogen bulbs have pressurized gas inside and require special handling. They can burst if scratched or dropped. Hold a bulb only by its plastic or metal case.

Don't touch the glass part of a bulb with bare hands.

2. SRS (SUPPLEMENTAL RESTRAINT SYSTEM)

The SUPRA is equipped with an SRS (Supplemental Restraint System) such as the driver airbag and front passenger airbag. Failure to carry out service operation in the correct sequence could cause the SRS to unexpectedly deploy during servicing, possibly leading to a serious accident. Before servicing (including removal or installation of parts, inspection or replacement), be sure to read the precautionary notices in the RS section.

3. AUDIO SYSTEM

- If the negative (-) terminal cable is disconnected from the battery, the preset AM, FM 1 and FM 2 stations stored in memory are erased, so be sure to note the stations and reset them after the battery terminal is reconnected.
- If the negative (-) terminal cable is disconnected from the battery, the "ANTI-THEFT SYSTEM" will operate when the cable is reconnected, but the radio, tape player and CD player will not operate. Be sure to input the correct ID number so that the radio, tape player and CD player can be operated again.

4. MOBILE COMMUNICATION SYSTEM

If the vehicle is equipped with a mobile communication system, refer to precautions in the IN section.

BE0DM-02

PROBLEM SYMPTOMS TABLE

IGNITION SWITCH AND KEY UNLOCK WARNING SWITCH

Symptom	Suspect Area	See page
Ignition switch is not set to each position.	1. Ignition Switch	BE-13
”Key unlock warning system” does not operate.	1. GAUGE Fuse (J/B No.1) 2. Key Unlock Warning Switch 3. Door Courtesy Switch 4. Wire Harness	 BE-13 BE-28

USA:
HEADLIGHT AND TAILLIGHT SYSTEM

Symptom	Suspect Area	See page
Headlight does not light. (Taillight is normal)	1. Headlight Bulb 2. HEAD (LH, RH) Fuse (R/B No.2) 3. Headlight Control Relay (R/B No.2) 4. Integration Relay 5. Headlight Dimmer Switch 6. Light Control Switch 7. Wire Harness	 BE-17 BE-13 BE-17 BE-17
Headlight does not light. (Taillight does not light up)	1. Headlight Bulb 2. Integration Relay 3. Light Control Switch 4. Wire Harness	 BE-13 BE-17
Only one side light does not light.	1. Headlight Bulb 2. HEAD (LH, RH) Fuse (R/B No.2) 3. Wire Harness	
”Lo-Beam” does not light.	1. Headlight Dimmer Switch 2. Wire Harness	BE-17
”Hi-Beam” does not light.	1. Headlight Dimmer Switch 2. Wire Harness	BE-17
”Flash” does not light.	1. Headlight Dimmer Switch 2. Wire Harness	BE-17

CANADA:
HEADLIGHT AND TAILLIGHT SYSTEM

Symptom	Suspect Area	See page
Headlight does not light. (Taillight is normal)	1. Headlight Bulb 2. Headlight Control Relay (R/B No.2) 3. D.R.L. Relay 4. D.R.L. No.2 Relay (R/B No.2) 5. D.R.L. No.3 Relay 6. Integration Relay 7. Headlight Dimmer Switch 8. Light Control Switch 9. Wire Harness	 BE-17 BE-17 BE-17 BE-17 BE-13 BE-17 BE-17
Headlight does not light. (Taillight does not light up)	1. D.R.L. Relay 2. D.R.L. No.2 Relay (R/B No.2) 3. D.R.L. No.3 Relay 4. Integration Relay 5. Light Control Switch 6. Wire Harness	BE-17 BE-17 BE-17 BE-13 BE-17
Only one side light does not light.	1. Headlight Bulb 2. Wire Harness	
”Lo-Beam” does not light (ALL).	1. Headlight Control Relay (R/B No.2) 2. Wire Harness	BE-17
”Lo-Beam” does not light (ONE SIDE).	1. Headlight Bulb 2. HEAD LH-LWR Fuse (R/B No.2) 3. HEAD RH-LWR Fuse (R/B No.2) 4. Wire Harness	
”Hi-Beam” does not light (ALL).	1. D.R.L. Relay 2. D.R.L. No.2 Relay (R/B No.2) 3. D.R.L. No.3 Relay 4. Headlight Dimmer Switch 5. Wire Harness	BE-17 BE-17 BE-17 BE-17
”Hi-Beam” does not light (ONE SIDE).	1. Headlight Bulb 2. HEAD LH-UPR Fuse (R/B No.2) 3. HEAD RH-UPR Fuse (R/B No.2) 4. Wire Harness	
”Flash” does not light.	1. D.R.L. Relay 2. D.R.L. No.2 Relay (R/B No.2) 3. D.R.L. No.3 Relay 4. Headlight Dimmer Switch 5. Wire Harness	BE-17 BE-17 BE-17 BE-17
”Auto Turn-off System” dose not operate.	1. GAUGE Fuse (J/B No.1) 2. Integration Relay 3. Door Courtesy Switch (Driver’s) 4. Wire Harness	 BE-13 BE-28
Headlight does not light with light control SW in HEAD.	1. Integration Relay 2. D.R.L. Relay 3. D.R.L. No.2 Relay (R/B No.2) 4. D.R.L. No.3 Relay 5. Light Control Switch 6. Wire Harness	BE-13 BE-17 BE-17 BE-17 BE-17
Headlight does not go out with light control SW in OFF.	1. Headlight Control Relay (R/B No.2) 2. Wire Harness	BE-17

Taillight does not light with light control SW in TAIL.	1. Taillight Relay (J/B No.1) 2. Integration Relay 3. Light Control Switch 4. Wire Harness	BE-17 BE-13 BE-17
Taillight does not go out with light control SW in OFF.	1. Taillight Relay (J/B No.1) 2. Integration Relay 3. Light Control switch 4. Wire Harness	BE-17 BE-13 BE-17
Headlight and Taillight do not light with engine running and light control SW in OFF.	1. GAUGE Fuse (J/B No.1) 2. Generator L Terminal 3. D.R.L. Relay 4. D.R.L. No.2 Relay (R/B No.2) 5. D.R.L. No.3 Relay 6. Parking Brake Switch 7. Wire Harness	 BE-17 BE-17 BE-17 BE-43

FOG LIGHT SYSTEM

Symptom	Suspect Area	See page
Fog light does not light with light control SW HEAD. (Headlight is normal.)	1. FOG Fuse (R/B No.2) 2. HEAD Fuse (R/B No.2) 3. Fog Light Relay (R/B No.2) 4. Fog Light Switch 5. Wire Harness	 BE-23 BE-23
Fog light does not light with light control SW HEAD. (Headlight does not light)	1. Headlight and Taillight system 2. Wire Harness	BE-15
Only one light does not light.	1. Bulb 2. Wire Harness	

TURN SIGNAL HAZARD WARNING SYSTEM

Symptom	Suspect Area	See page
”Hazard” and ”Turn” do not light up.	1. Hazard Warning Switch 2. Turn Signal Flasher 3. Wire Harness	BE-26 BE-26
The flashing frequency is abnormal.	1. Bulb 2. Turn Signal Flasher 3. Wire Harness	BE-26
Hazard warning light does not light up. (Turn is normal.)	1. HAZ-HORN Fuse (R/B No.2) 2. Wire Harness	
Hazard warning light does not light up in one direction.	1. Hazard Warning Switch 2. Wire Harness	BE-26
Turn signal does not light up. (Combination meter, wiper and washer do not operate.)	1. TURN Fuse (J/B No.1) 2. Ignition Switch 3. Turn Signal Switch 4. Wire Harness	 BE-13 BE-26
Turn signal does not light up.	1. TURN Fuse (J/B No.1) 2. Turn Signal Switch 3. Wire Harness	BE-26
Turn signal does not light up in one direction.	1. Turn Signal Switch 2. Wire Harness	BE-26
Only one bulb does not light up.	1. Bulb 2. Wire Harness	

INTERIOR LIGHT SYSTEM

Symptom	Suspect Area	See page
Only one light does not light up.	1. Bulb 2. Wire Harness	
Interior light does not light up (All).	1. DOME Fuse (R/B No.2) 2. Integration Relay 3. Wire Harness	BE-28
”Illuminated Entry System” does not operate.	1. Integration Relay 2. Door Courtesy Switch 3. Door Key Lock and Unlock Switch 4. Door Unlock Detection Switch 5. Wire Harness	BE-28 BE-28 DI-656 DI-638
Front personal light does not light up.	1. Bulb 2. Front Personal Light 3. Wire Harness	BE-28
Luggage room light does not light up.	1. Bulb 2. Luggage Room Light Switch	BE-28

BACK-UP LIGHT SYSTEM

Symptom	Suspect Area	See page
Back Up Light does not light up.	1. Bulb 2. GAUGE Fuse (J/B No.1) 3. Ignition Switch 4. Back-up Light Switch (M/T) 5. Park/Neutral Position Switch (A/T) 6. Wire Harness	BE-13 BE-31 DI-354 DI-423
Back Up Light remains always on.	1. Wire Harness	
Only one light does not light up.	1. Bulb 2. Wire Harness	

STOP LIGHT SYSTEM

Symptom	Suspect Area	See page
Stop light does not light up.	1. Bulb 2. STOP Fuse (J/B No.1) 3. Stop Light Switch 4. Wire Harness	BE-33
Stop light remains always on.	1. Stop Light Switch 2. Wire Harness	BE-33
Only one light does not light up.	1. Bulb 2. Wire Harness	

WIPER AND WASHER SYSTEM

Symptom	Suspect Area	See page
Wipers and washers do not operate.	1. WIPER Fuse (J/B No.1) 2. Ignition Switch 3. Wiper and Washer Switch 4. Wire Harness	 BE-13 BE-35
Front wiper does not operate.	1. Front Wiper and Washer Switch 2. Front Wiper Motor 3. Wire Harness	BE-35 BE-35
Rear wiper does not operate.	1. Rear Wiper and Washer Switch 2. Rear Wiper Motor and Relay 3. Wire Harness	BE-35 BE-35
Front washer does not operate.	1. Front Wiper and Washer Switch 2. Washer Motor 3. Wire Harness	BE-35 BE-35
Rear washer does not operate.	1. Rear Wiper and Washer Switch 2. Washer Motor 3. Wire Harness	BE-35 BE-35

COMBINATION METER
METER, GAUGES AND ILLUMINATION:

Symptom	Suspect Area	See page
Tachometer, Fuel Gauge and Engine Coolant Temperature Gauge do not operate.	1. GAUGE Fuse (J/B No.1) 2. Meter Circuit 3. Wire Harness	 BE-40
Speedometer does not operate.	1. Vehicle Speed Sensor 2. Meter Circuit 3. Wire Harness	BE-43 BE-40
Tachometer does not operate.	1. Igniter 2. ECM 3. Meter Circuit 4. Wire Harness	 DI-1 DI-145 BE-40
Fuel Gauge does not operate or abnormal operation.	1. Fuel Receiver Gauge 2. Fuel Sender Gauge 3. Meter Circuit 4. Wire Harness	BE-43 BE-43 BE-40
Engine Coolant Temperature Gauge does not operate or abnormal operation.	1. Engine Coolant Temperature Receiver Gauge 2. Engine Coolant Temperature Sender Gauge 3. Meter Circuit 4. Wire Harness	BE-43 BE-43 BE-40
All illumination lights do not light up.	1. TAIL Fuse (J/B No.1) 2. Light Control Rheostat 3. Meter Circuit 4. Wire Harness	 BE-43 BE-40
Only one illumination light does not light up.	1. Bulb 2. Meter Circuit	 BE-40

WARNING LIGHTS:

Symptom	Suspect Area	See page
Warning lights do not light up. (Except Discharge and Door Open)	1. Bulb 2. IGN Fuse (J/B No.1) 3. Ignition Switch 4. Meter Circuit 5. Generator 6. Wire Harness	 BE-13 BE-40
Brake Warning Light does not light up.	1. Bulb 2. Brake Fluid Level Warning Switch 3. Parking Brake Switch 4. Bulb Check Relay 5. Meter Circuit 6. Wire Harness	 BE-43 BE-43 BE-40
Seat Belt Warning Light does not light up.	1. Bulb 2. Seat Belt Buckle Switch 3. Integration Relay 4. Meter Circuit 5. Wire Harness	 BE-43 BE-13 BE-40
Engine Oil Level Warning Light does not light up.	1. Bulb 2. Engine Oil Level Warning Switch 3. Meter Circuit 4. Wire Harness	 BE-43 BE-40
Low Oil Pressure Warning Light does not light up.	1. Bulb 2. Low Oil Pressure Warning Switch 3. Meter Circuit	 BE-43 BE-40
Door Open Warning Light does not light up.	1. Bulb 2. DOME Fuse (R/B No.2) 3. Door Courtesy Switch 4. Luggage Room Light Switch 5. Integration Relay 6. Meter Circuit 7. Wire Harness	 BE-28 BE-28 BE-13 BE-40
Master Warning Light does not light up.	1. Bulb 2. Telltale Light Circuit 3. Meter Circuit 4. Wire Harness	 BE-40 BE-40

INDICATOR LIGHTS:

Symptom	Suspect Area	See page
SRS Indicator Light does not light up.	1. Bulb 2. Center Airbag Sensor 3. Wire Harness	 DI-555
ABS Indicator Light does not light up.	1. Bulb 2. Traction ECU 3. Wire Harness	 DI-499
Malfunction Indicator Light does not light up.	1. Bulb 2. ECM 3. Wire Harness	 DI-1 DI-145
TRAC OFF Indicator Light does not light up.	1. Bulb 2. Traction Solenoid Relay 3. Traction ECU 4. Wire Harness	 DI-499 DI-499

Security Indicator Light does not light up.	1. Light Emitting Diode 2. Theft Deterrent and Door Lock ECU 3. Wire Harness	DI-608
A/T Shift Position Indicator Light does not light up.	1. Bulb 2. Park/Neutral Position Switch 3. Light Control Rheostat 4. Meter Circuit 5. Wire Harness	DI-354 DI-423 BE-43 BE-40
MANU Indicator Light does not light up.	1. Bulb 2. ECM 3. Meter Circuit 4. Wire Harness	BE-40
O/D OFF Indicator Light does not light up.	1. Bulb 2. O/D Main Switch 3. ECM 4. Meter Circuit 5. Wire Harness	BE-43 DI-1 DI-145 BE-40
TRAC Indicator Light does not light up.	1. Bulb 2. ABS and Traction ECU 3. Meter Circuit 4. Wire Harness	BE-40
Turn Indicator Light does not light up.	1. Bulb 2. Turn Signal and Hazard Warning System 3. Meter Circuit 4. Wire Harness	BE-25 BE-40
High Beam Indicator Light does not light up.	1. Bulb 2. Headlight and Taillight System 3. Meter Circuit 4. Wire Harness	BE-15 BE-40
CRUISE Indicator Light does not light up.	1. Bulb 2. Cruise Control ECU 3. Meter Circuit 4. Wire Harness	DI-660 BE-40
SNOW Indicator Light does not light up.	1. Bulb 2. Traction ECU 3. Meter Circuit 4. Wire Harness	BE-40

ELECTRIC TENSION REDUCER SYSTEM

Symptom	Suspect Area	See page
Tension Reducer does not operate. (Driver's and Passenger's)	1. ECU-IG fuse (J/B No.1) 2. Wire Harness	
Tension Reducer does not operate. (Only one side)	1. Buckle Switch 2. Tension Reducer Solenoid 3. Wire Harness	BE-54 BE-43

DEFOGGER SYSTEM

Symptom	Suspect Area	See page
All defogger systems do not operate.	1. GAUGE Fuse (J/B No.1) 2. DEFOG Fuse (J/B No.1) 3. Defogger Relay (R/B No.4) 4. Defogger Switch 5. A/C Amplifier 6 Wire Harness	 BE-56 BE-56 DI-711
Rear window defogger does not operate.	1. Defogger Wires 2. Wire Harness	BE-56
Mirror defogger does not operate.	1. MIR-HTR Fuse (J/B No.1) 2. Mirror Defogger 3. Wire Harness	BE-56

POWER WINDOW CONTROL SYSTEM

Symptom	Suspect Area	See page
Power window does not operate. (Power door lock does not operate.)	1. POWER Fuse (R/B No.2) 2. DOOR Fuse (J/B No.1) 3. Ignition Switch 4. Power Window Master Switch 5. Wire Harness	 BE-13 BE-60
Power Window does not operate. (Power door lock is normal.)	1. GAUGE Fuse (J/B No.1) 2. Power Main Relay (J/B No.1) 3. Ignition Switch 4. Power Window Master Switch 5. Wire Harness	 BE-60 BE-13 BE-60
”One Touch Power Window System” does not operate.	1. Power Window Master Switch	BE-60
Only one window glass does not move.	1. Power Window Master Switch 2. Power Window Switch 3. Power Window Motor 4. Wire Harness	BE-60 BE-60 BE-60
”Window Lock System” does not operate.	1. Power Window Master Switch	BE-60
Illumination does not light up.	1. Power Window Master Switch	BE-60

POWER SEAT CONTROL SYSTEM

Symptom	Suspect Area	See page
Power seat does not operate.	1. POWER Fuse (R/B No.2) 2. DOOR Fuse (J/B No.1) 3. Power Seat Switch 4. Wire Harness	 BE-65
”Slide operation” does not operate.	1. Power Seat Switch 2. Sliding Motor 3. Wire Harness	BE-65 BE-65
”Reclining operation” does not operate.	1. Power Seat Switch 2. Reclining Motor 3. Wire Harness	BE-65 BE-65

POWER MIRROR CONTROL SYSTEM

Symptom	Suspect Area	See page
Mirror does not operate.	1. RAD No.2 Fuse (J/B No.1) 2. Mirror Switch 3. Mirror Motor 4. Wire Harness	 BE-68 BE-68
Mirror operates abnormally.	1. Mirror Switch 2. Mirror Motor 3. Wire Harness	BE-68 BE-68

SEAT HEATER SYSTEM

Symptom	Suspect Area	See page
Seat heaters do not operate. (Driver's and Passenger's)	1. SEAT HTR Fuse (J/B No.1) 2. Wire Harness	
Driver's seat heater does not operate.	1. Seat Heater Switch (Driver's) 2. Seat Heater 3. Wire Harness	BE-70 BE-70
Passenger's seat heater does not operate.	1. Seat Heater Switch (Passenger's) 2. Seat Heater 3. Wire Harness	BE-70 BE-70
Seat heater temperature is too hot.	1. Seat Heater	BE-70

POWER SOURCE

BE0DN-02

LOCATION

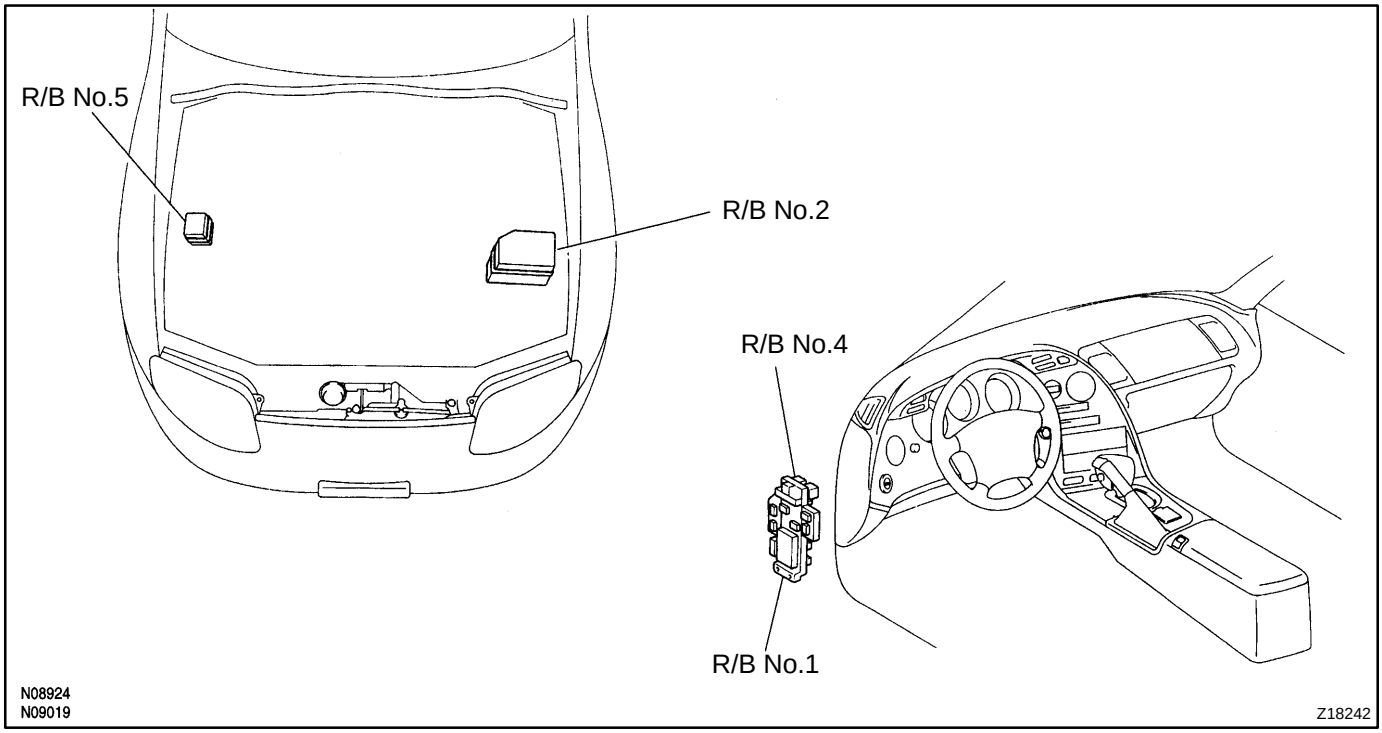

IGNITION SWITCH AND KEY UNLOCK WARNING SWITCH

BE0DO-02

LOCATION

Ignition Switch
- Key Unlock Warning Switch

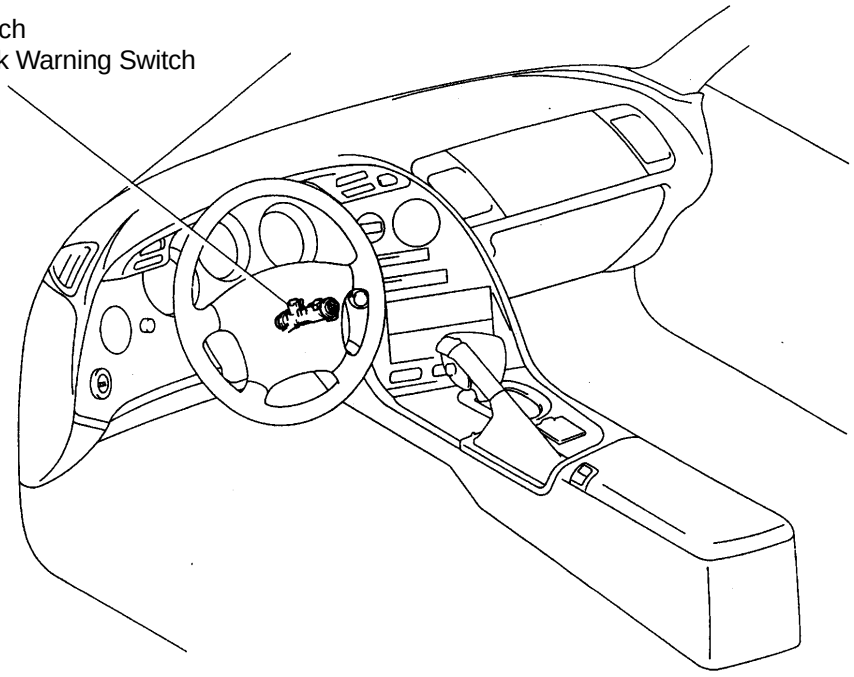

Z18243

BE1L3-01

INSPECTION

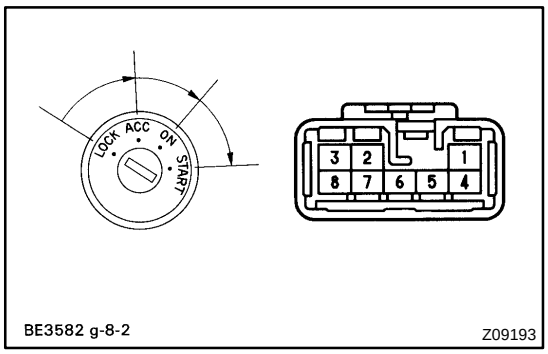

1. INSPECT IGNITION SWITCH CONTINUITY

Switch position	Tester connection	Specified condition
LOCK	-	No continuity
ACC	5 - 7	Continuity
ON	4 - 5 - 7, 2 - 3	Continuity
START	4 - 7 - 8, 1 - 2 - 3	Continuity

If continuity is not as specified, replace the switch.

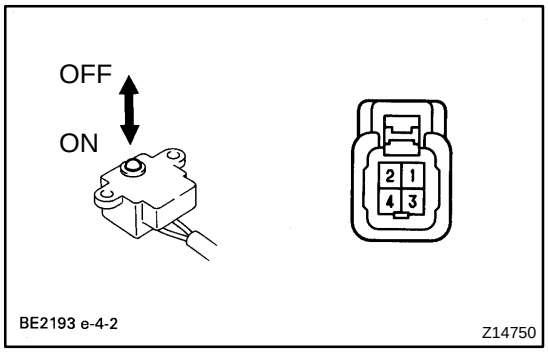

2. INSPECT KEY UNLOCK WARNING SWITCH CONTINUITY

Condition	Tester connection	Specified condition
SW OFF (Key removed)	-	No continuity
SW ON (Key set)	1 - 2	Continuity

If continuity is not as specified, replace the switch.

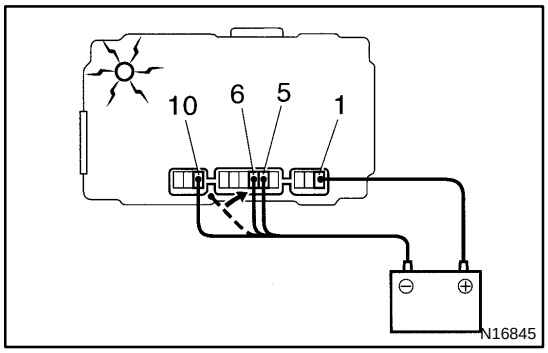

3. Key Unlock Warning System: INSPECT INTEGRATION RELAY OPERATION

(a) Connect the positive (+) lead from the battery to terminal 1, the negative (-) lead to terminals 5 and 10..

(b) Check the buzzer sounds when the negative (-) lead from the battery is connected to terminal 6..

If operation is not as specified, replace the relay.

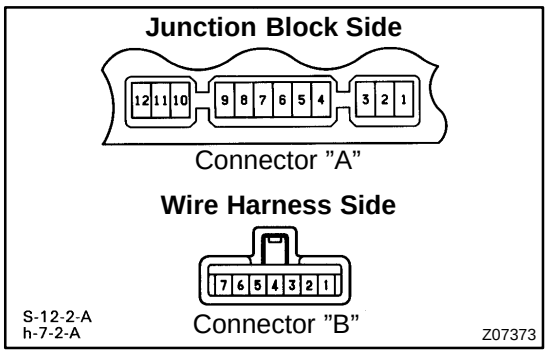

4. INSPECT RELAY CIRCUIT

Light Auto Turn Off System:

Remove the relay from junction block and inspect the connectors on the wire harness and junction block side, as shown in the chart.

Tester connection	Condition	Specified condition
A6 - Ground	Driver's door courtesy switch OFF	No continuity
A6 - Ground	Driver's door courtesy switch ON	Continuity
A10 - Ground	Constant	Continuity
B1 - Ground	Light control switch position OFF or TAIL	No continuity
B1 - Ground	Light control switch position HEAD	Continuity
B4 - Ground	Light control switch position OFF	No continuity
B4 - Ground	Light control switch position TAIL or HEAD	Continuity
A1 - Ground	Constant	Battery positive voltage
A7 - Ground	Ignition switch position LOCK or ACC	No voltage
A7 - Ground	Ignition switch position ON	Battery positive voltage
B2 - Ground	Constant	Battery positive voltage
B3 - Ground	Constant	Battery positive voltage

If the circuit is as specified, try replacing the relay with a new one.

If the circuit not as specified, inspect the circuits connected to other parts.

HEADLIGHT AND TAILLIGHT SYSTEM

BE0DQ-01

LOCATION

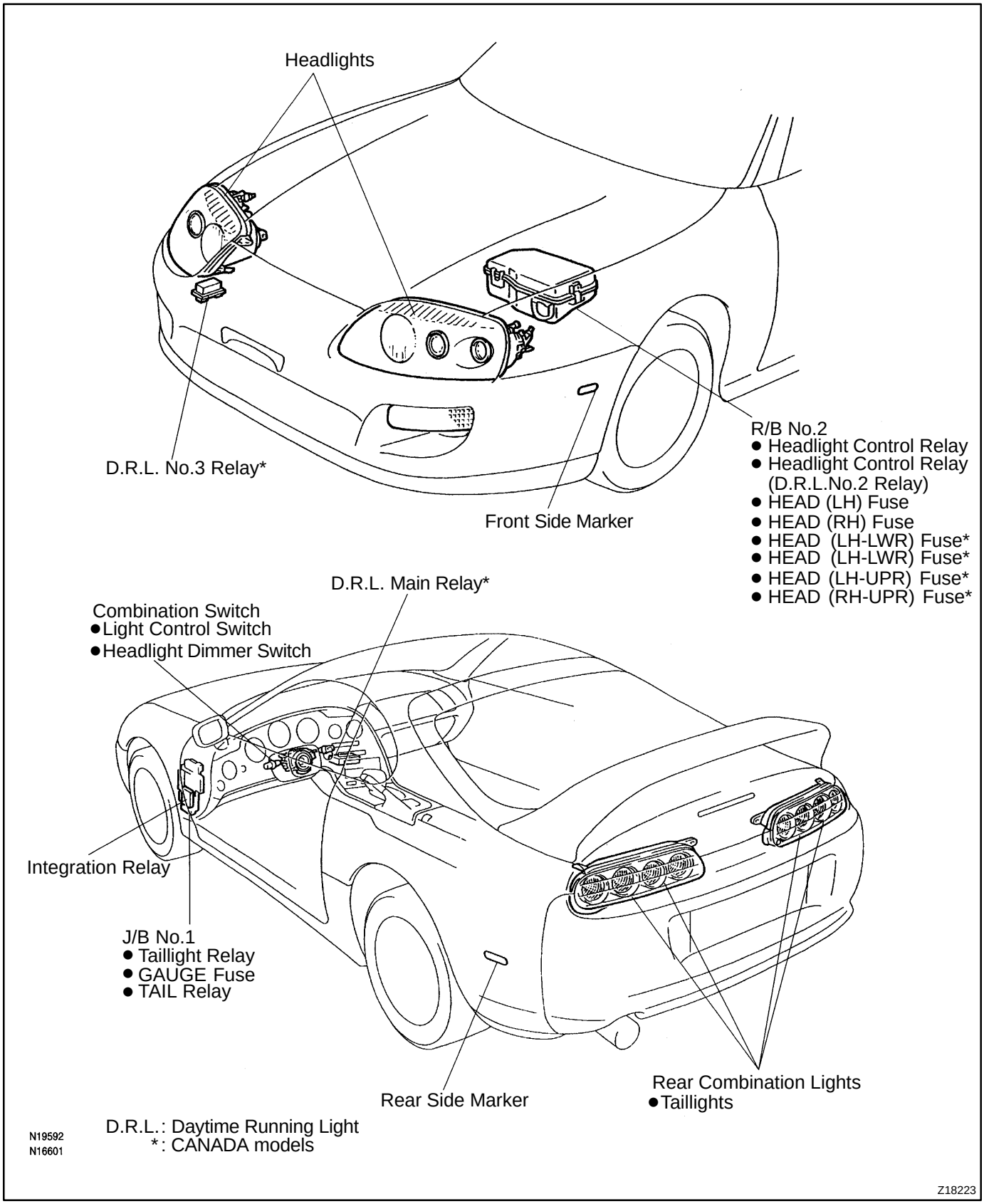

BE0DR-02

COMPONENTS

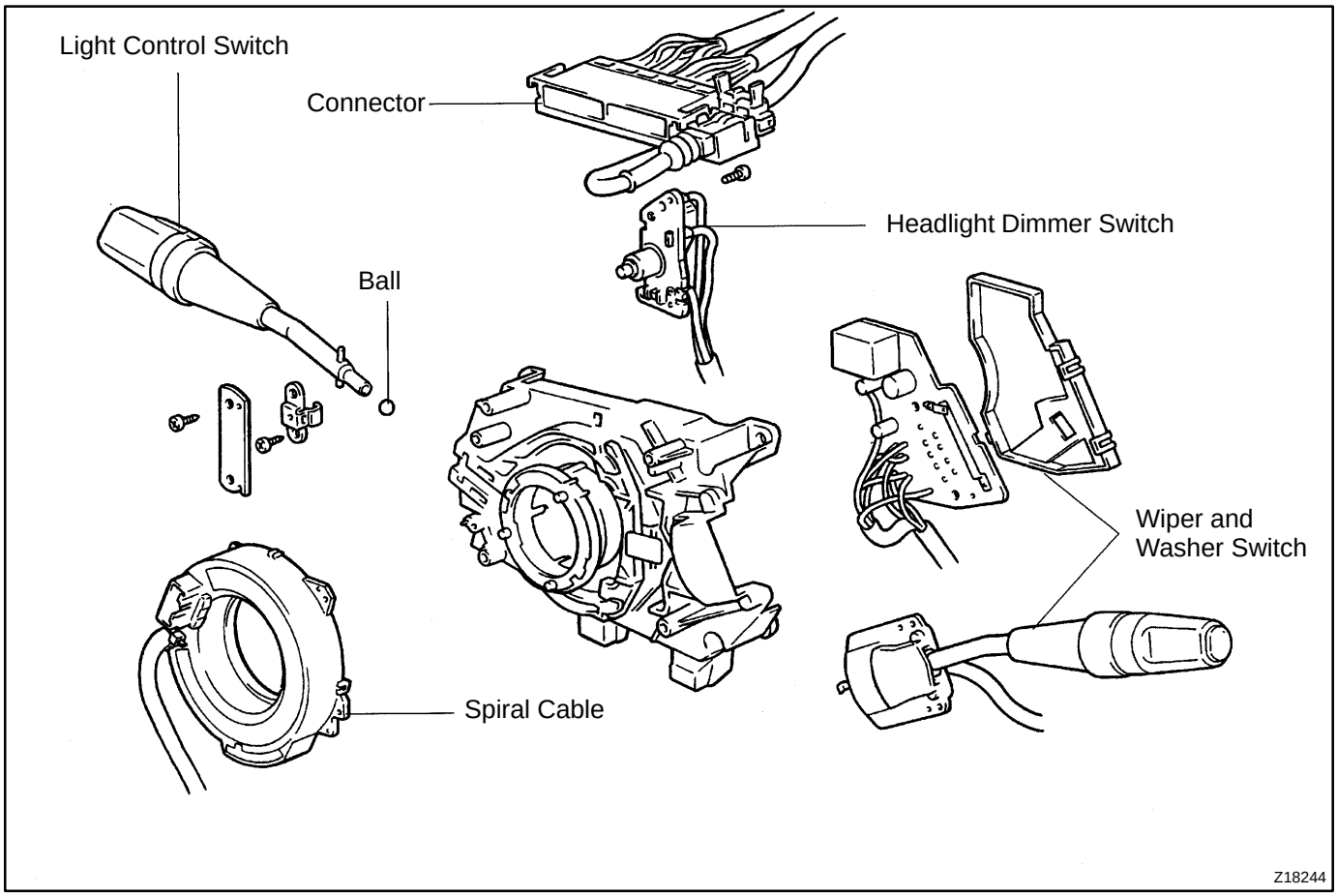

BE0DS-02

INSPECTION

1. INSPECT LIGHT CONTROL SWITCH CONTINUITY

Switch position	Tester connection	Specified condition
OFF	-	No continuity
TAIL	A2 - A11	Continuity
HEAD	A2 - A11 - A13	Continuity

If continuity is not as specified, replace the switch.

2. INSPECT HEADLIGHT DIMMER SWITCH CONTINUITY

Switch position	Tester connection	Specified condition
Flash	A9 - A12 - A14	Continuity
Low beam	A3 - A9	Continuity
High beam	A9 - A12	Continuity

If continuity is not as specified, replace the switch.

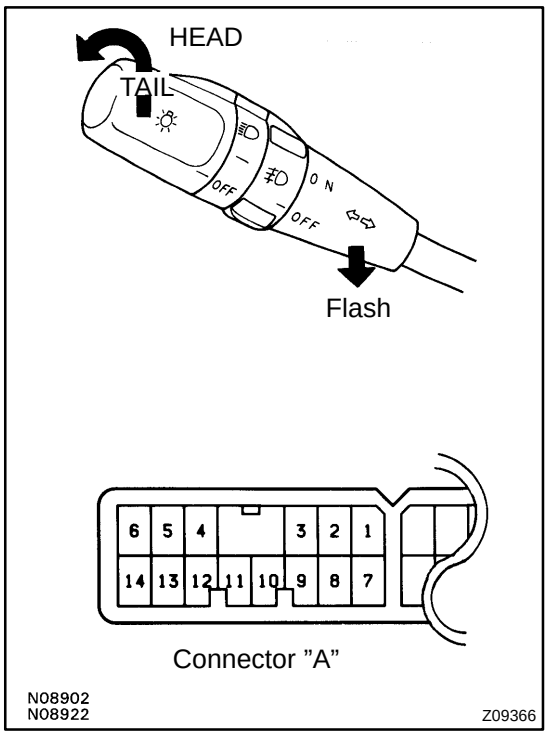

3. INSPECT HEADLIGHT CONTROL RELAY CONTINUITY

Condition	Tester connection	Specified condition
Constant	3 - 4	Continuity
Apply B+ between terminal 3 and 4.	1 - 2	Continuity

If continuity is not as specified, replace the relay.

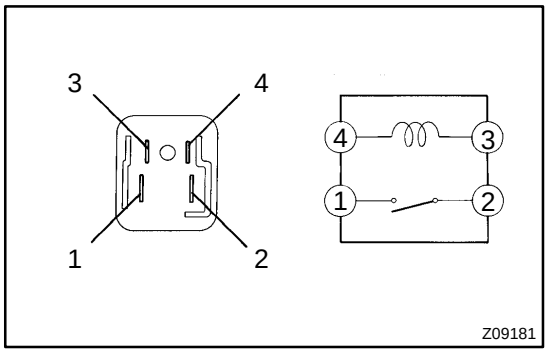

4. INSPECT TAILLIGHT RELAY CONTINUITY

Condition	Tester connection	Specified condition
Constant	1 - 2	Continuity
Apply B+ between terminals 1 and 2.	3 - 5	Continuity

If continuity is not as specified, replace the relay.

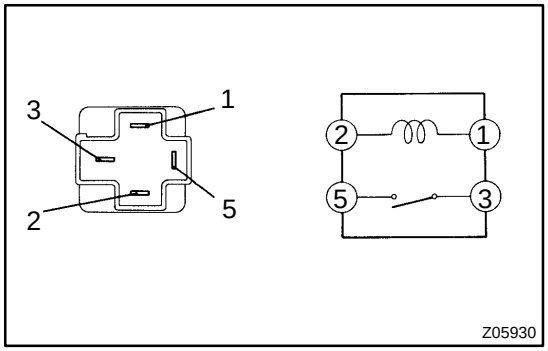

5. Light Auto Turn Off System:

INSPECT INTEGRATION RELAY CIRCUIT (See page BE-13)

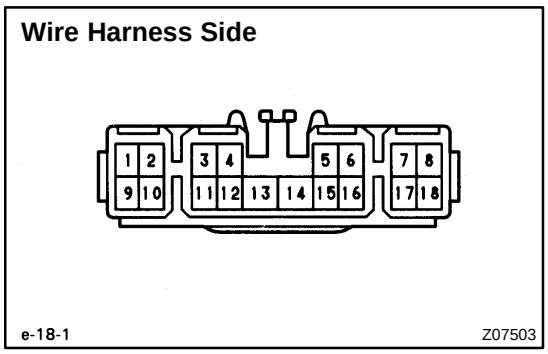

6. INSPECT DOOR COURTESY SWITCH CONTINUITY
(See page BE-28)

7. CANADA models only:
INSPECT D.R.L. MAIN RELAY CIRCUIT

Disconnect the connector from relay and inspect the connector on wire harness side, as shown.

Tester connection	Condition	Specified condition
5 - Ground	Headlight dimmer switch position Low beam or high beam	No continuity
5 - Ground	Headlight dimmer switch position Flash	Continuity
8 - Ground	Parking brake switch position OFF	No continuity
8 - Ground	Parking brake switch position ON	Continuity
16 - Ground	Headlight dimmer switch position Low beam	No continuity
16 - Ground	Headlight dimmer switch position Flash or High beam	Continuity
13 - Ground	Constant	Continuity
18 - Ground	Constant	Continuity
2 - Ground	Ignition switch position LOCK or ACC	No voltage
2 - Ground	Ignition switch position ON	Battery positive voltage
11 - Ground	Engine Stop	No voltage
11 - Ground	Engine Running	Battery positive voltage
15 - Ground 17 - Ground	Constant	Battery positive voltage

If the circuit is as specified, try replacing the relay with a new one.

If the circuit is not as specified, inspect the circuit connected to other parts.

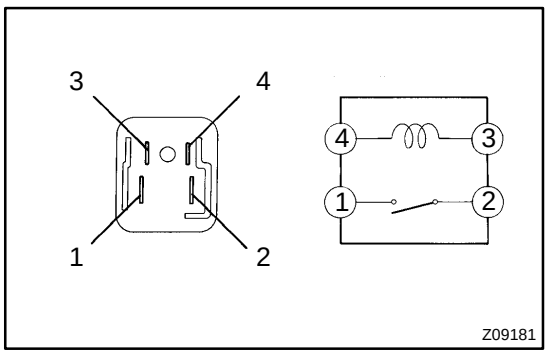

8. INSPECT D.R.L. NO.2 RELAY CONTINUITY

Condition	Tester connection	Specified condition
Constant	3 - 4	Continuity
Apply B+ between terminals 3 and 4.	1 - 2	Continuity

If continuity is not as specified, replace the relay.

9. INSPECT D.R.L. NO.3 RELAY CONTINUITY

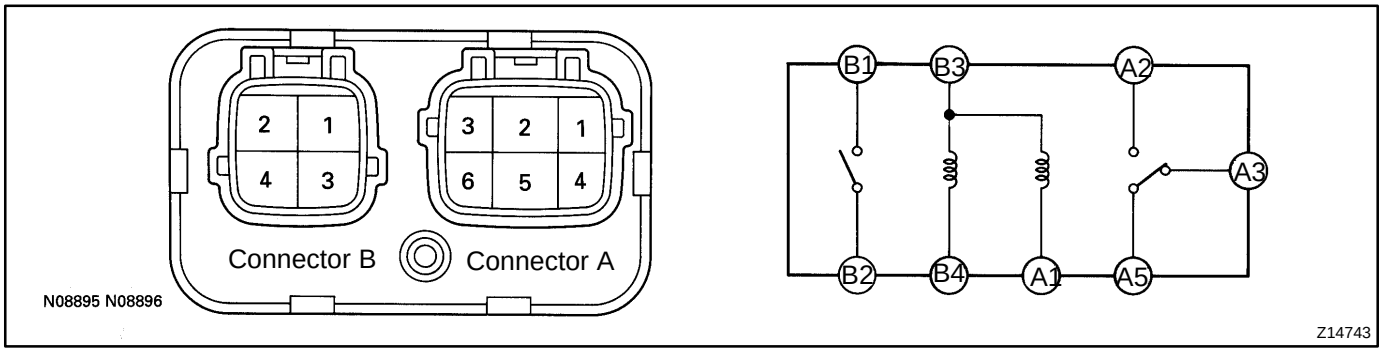

Tester connection	Condition	Specified condition
A1 - B3	Constant	Continuity
A3 - A5	Constant	Continuity
B3 - B4	Constant	Continuity
A2 - A5	Apply battery positive voltage between terminal A1 and B3.	Continuity
B1 - B2	Apply battery positive voltage between terminal B3 and B4.	Continuity

If continuity is not as specified, replace the relay.

10. INSPECT PARKING BRAKE SWITCH CONTINUITY (See page BE-43)

BE0DT-01

ADJUSTMENT

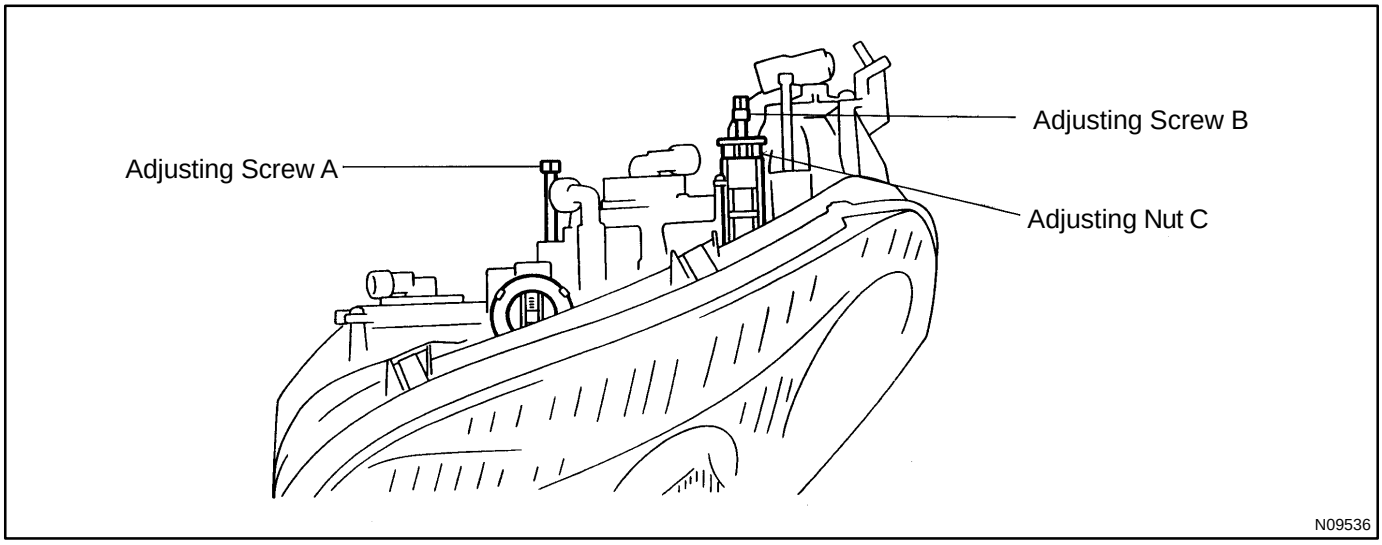

1. Adjusting headlight aim only:
INSPECT HEADLIGHT AIM

Do the following before inspection.

- Make sure the body around the headlight is not deformed.
- Park the vehicle on a level spot.
- The driver gets into the driver's seat and puts the vehicle in a state ready for driving (with a full tank).
- Bounce the vehicle several times.

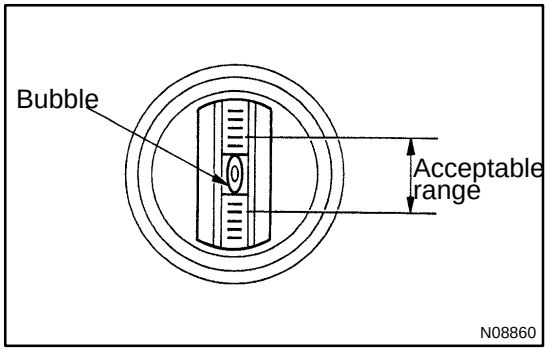

2. Adjusting headlight aim only:
ADJUST HEADLIGHT VERTICAL ALIGNMENT

If the bubble is outside the acceptable range of the beam angle gauge, adjust it using adjusting screw A.

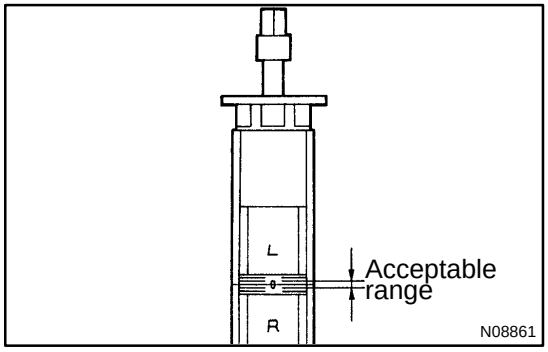

3. Adjusting headlight aim only:
ADJUST HEADLIGHT HORIZONTAL ALIGNMENT

If the "0" moves away from the mark beyond the acceptable range, adjust the "0" back to the mark using adjusting screw B.

4. Replacing headlight:
REPLACE HEADLIGHT

5. Replacing headlight:
INSPECT HEADLIGHT AIM

Do the following before inspection.

- Make sure the body around the headlight is not deformed.
- Park the vehicle on a level spot.
- The driver gets into the driver's seat and puts the vehicle in a state ready for driving (with a full tank).
- Bounce the vehicle several times.

6. Replacing headlight:
ADJUST HEADLIGHT IN VERTICAL ALIGNMENT

(a) Using adjusting screw A, adjust the headlight aim to within the specifications.

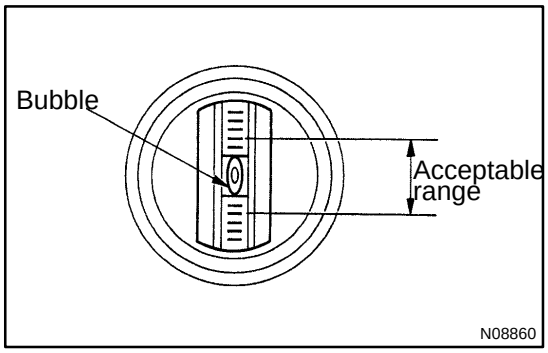

(b) Make sure the gauge bubble is within the acceptable range.

HINT:

If the gauge bubble is outside the acceptable range, check that the vehicle is parked on a level spot.

Readjust the headlight aim after parking the vehicle on a level spot.

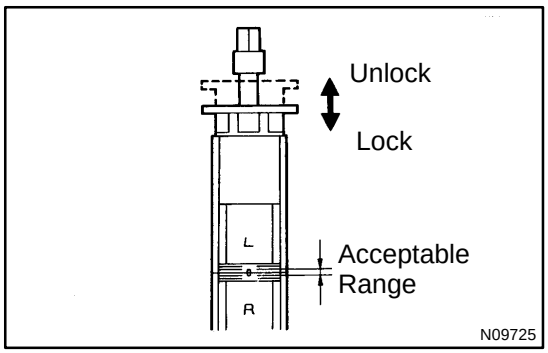

7. Replacing headlight:
ADJUST HEADLIGHT IN HORIZONTAL ALIGNMENT

(a) Using adjusting screw B, adjust the headlight aim to within the specifications.

(b) Using adjusting nut C, adjust the "0" back to the mark.

HINT:

For adjustment, pull nut C to the rear vehicle to free it. After adjustment, check that the nut C is locked in.

FOG LIGHT SYSTEM

LOCATION

BE0DU-03

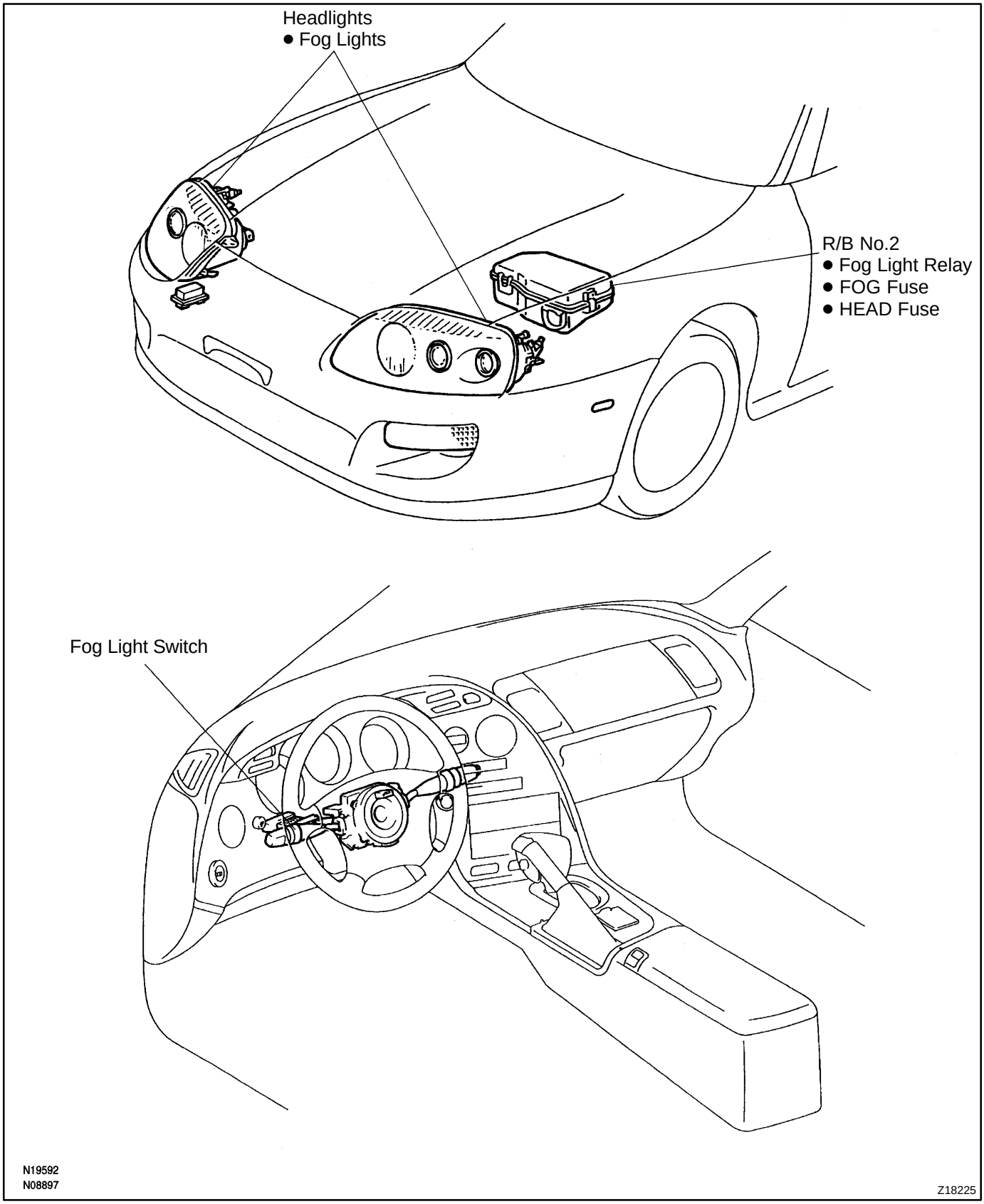

BE0DV-03

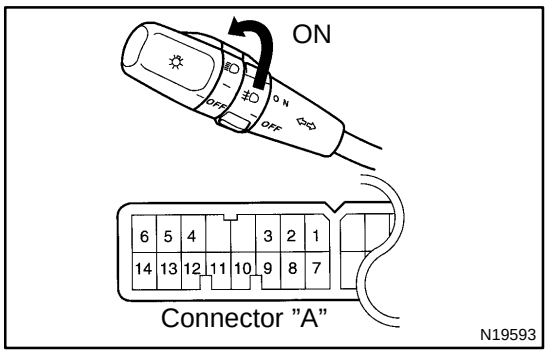

INSPECTION

1. INSPECT FOG LIGHT SWITCH CONTINUITY

Switch position	Tester connection	Specified condition
OFF	-	No continuity
ON	A6 - A7	Continuity

If continuity is not as specified, replace the switch.

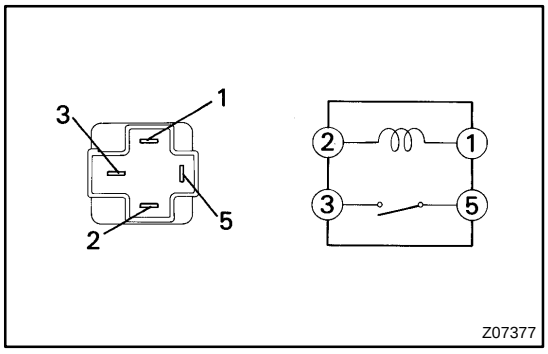

2. INSPECT FOG LIGHT RELAY CONTINUITY

Condition	Tester connection	Specified condition
Constant	1 - 2	Continuity
Apply B+ between terminals 1 and 2.	3 - 5	Continuity

If continuity is not as specified, replace the relay.

BE0DW-01

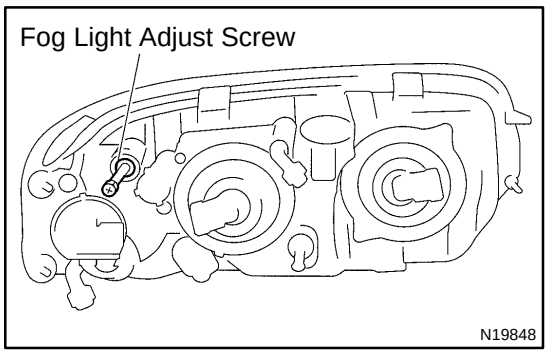

ADJUSTMENT

ADJUST FOG LIGHT AIM

Adjust Screw: Vertical Direction

TURN SIGNAL AND HAZARD WARNING SYSTEM

LOCATION

BE0DX-01

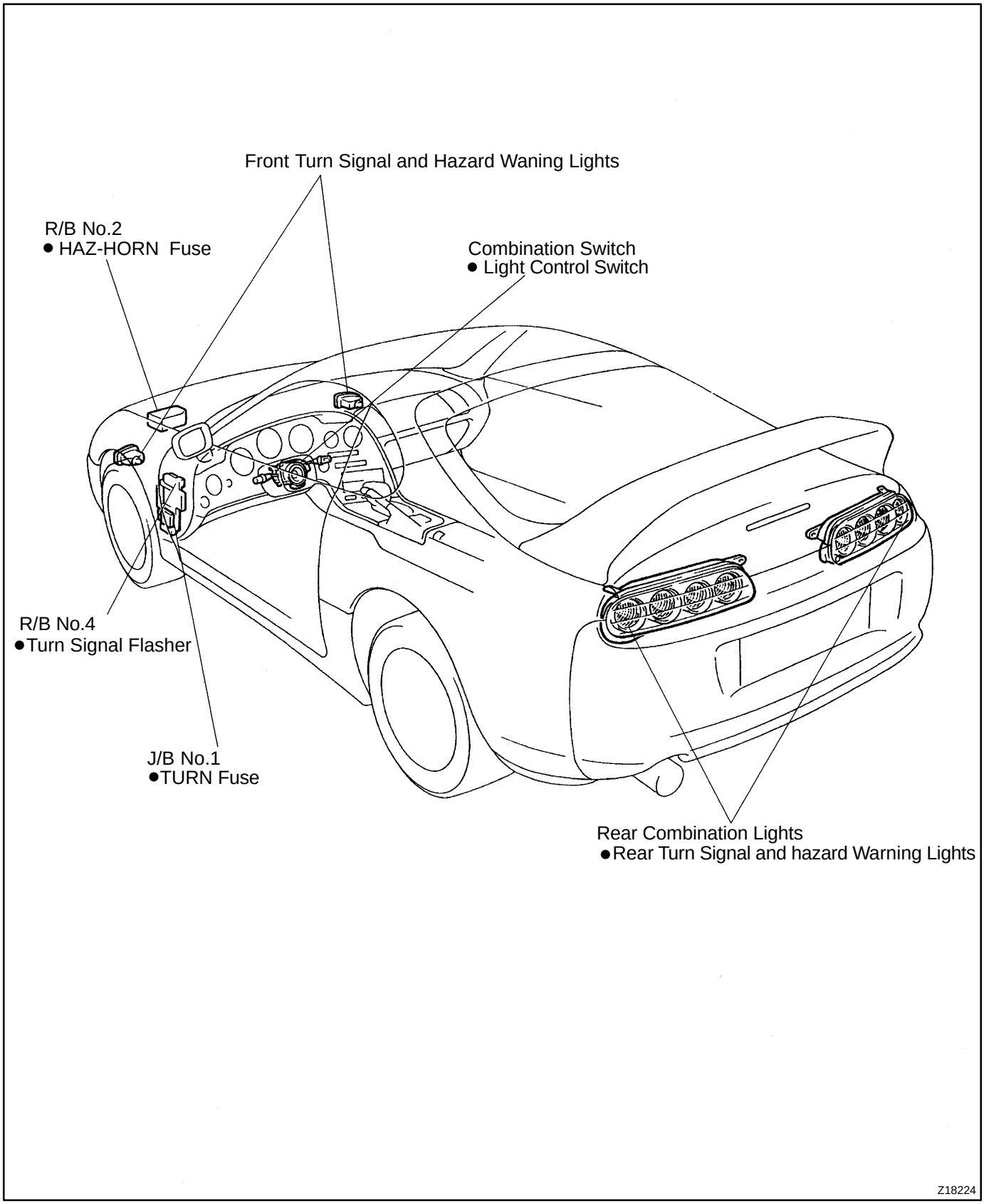

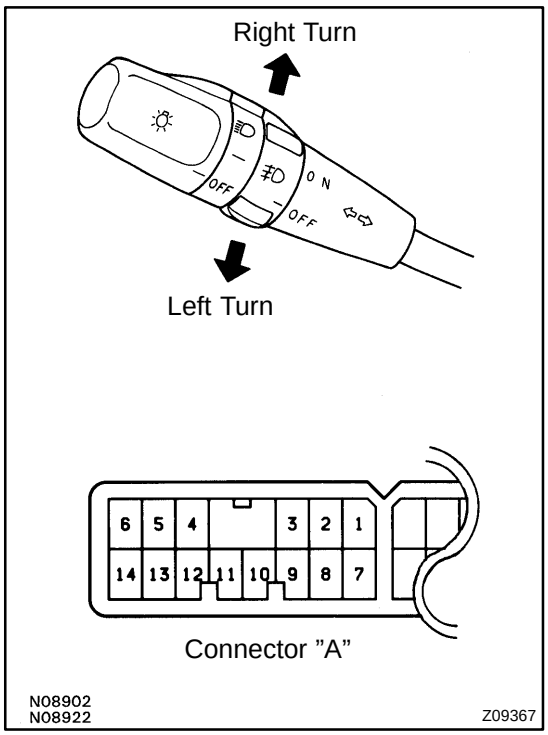

BE0DY-02

INSPECTION

BE3QR-01

1. INSPECT TURN SIGNAL SWITCH CONTINUITY

Switch position	Tester connection	Specified condition
Left turn	A1 - A5	Continuity
Neutral	-	No continuity
Right turn	A1 - A8	Continuity

If continuity is not as specified, replace the switch.

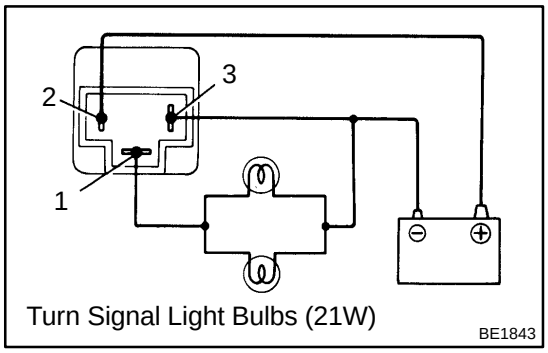

2. INSPECT TURN SIGNAL FLASHER OPERATION

(a) Connect the terminal 2 to battery positive (+) terminal and the terminal 3 to battery negative (-) terminal.

(b) Connect the 2 turn signal light bulbs parallel to each other to terminals 1 and 3, check that the bulbs flash.

HINT:

The turn signal lights should flash between 60 and 120 times per minute.

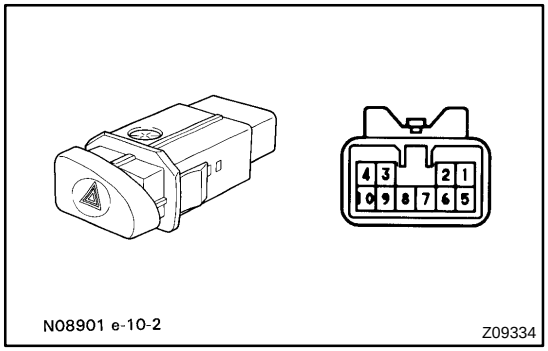

3. INSPECT HAZARD WARNING SWITCH CONTINUITY

Condition	Tester connection	Specified condition
Switch OFF	7 - 10	Continuity
Switch ON	7 - 8 4 - 5 - 6 - 9	Continuity
Illumination circuit	2 - 3	Continuity

If continuity is not as specified, replace the switch.

INTERIOR LIGHT SYSTEM

LOCATION

BE0DZ-01

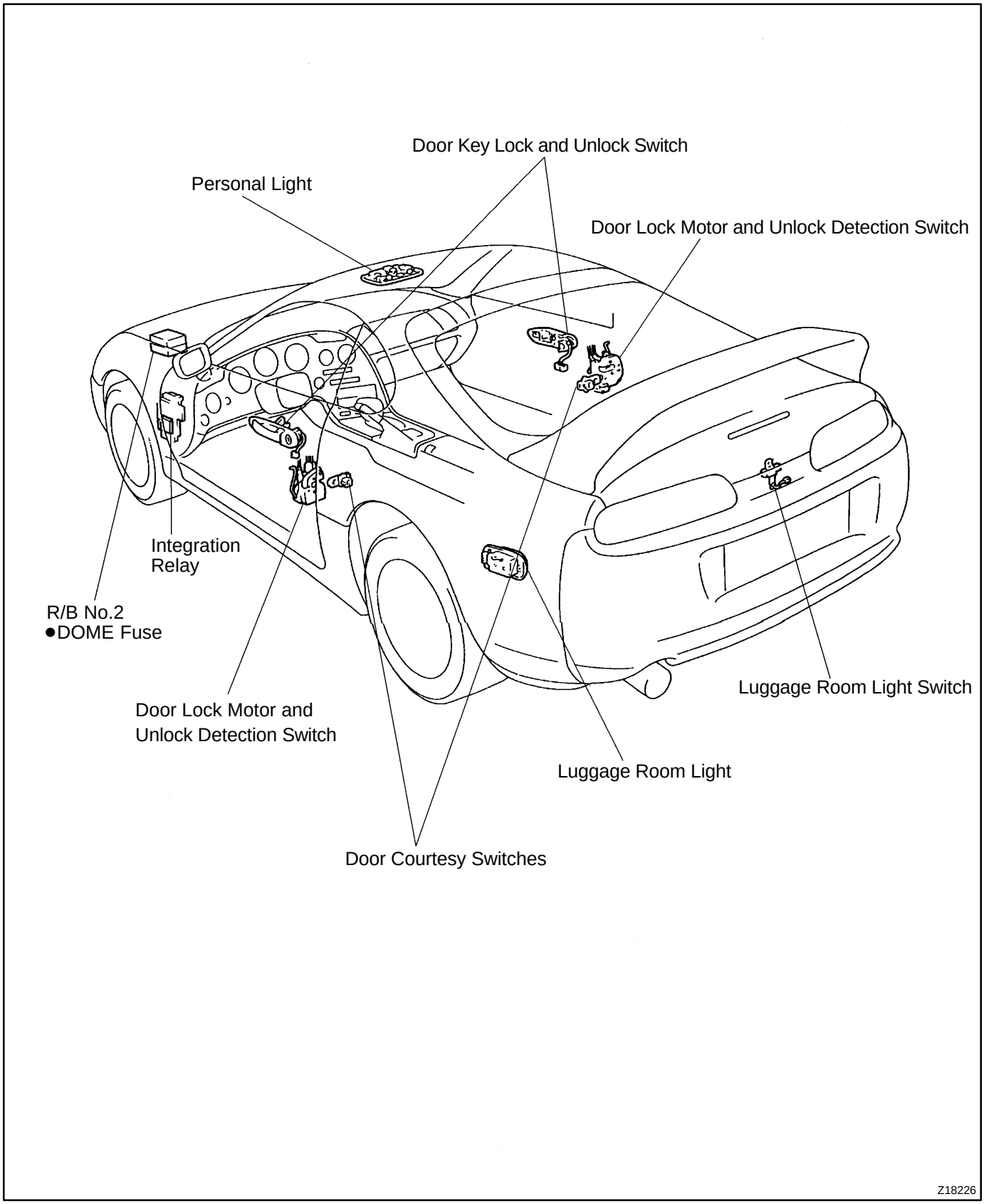

BE0E0-02

INSPECTION

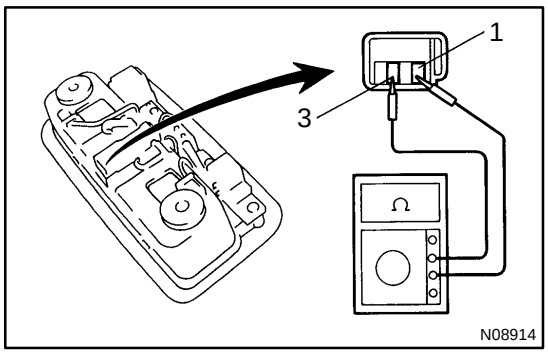

1. INSPECT INTERIOR LIGHT CONTINUITY

Switch position	Tester connection	Specified condition
DOOR	1 - 3	Continuity
OFF	-	No continuity

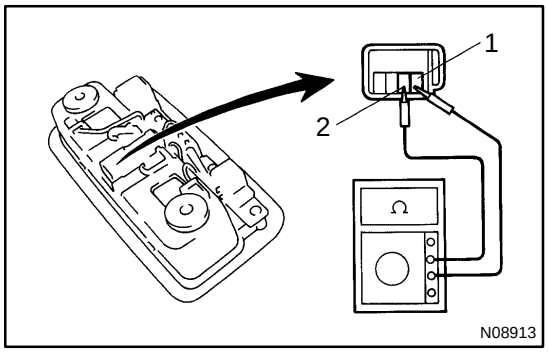

2. INSPECT PERSONAL LIGHT CONTINUITY

Switch position	Tester connection	Specified condition
OFF	-	No continuity
*ON	1 - 2	Continuity

* Set the interior light switch to OFF or DOOR.

If continuity is not as specified, replace the light assembly or bulb.

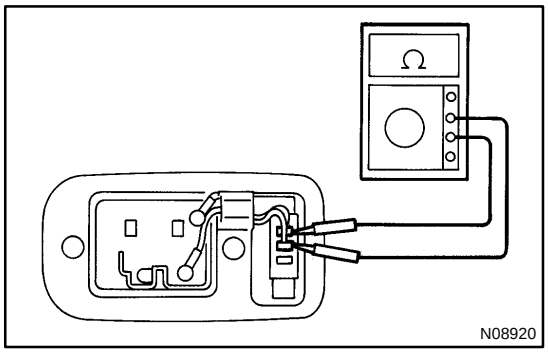

3. INSPECT LUGGAGE ROOM LIGHT CONTINUITY

Switch position	Tester connection	Specified condition
OFF	1 - 2	No continuity
ON	1 - 2	Continuity

If continuity is not as specified, replace the light.

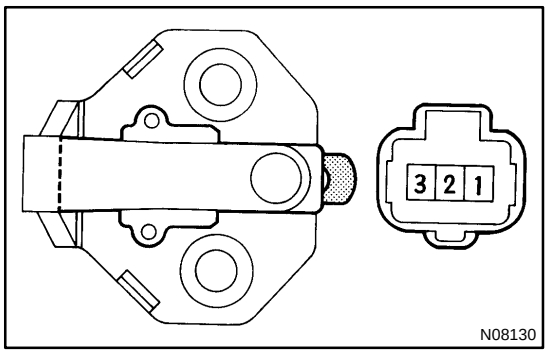

4. INSPECT DOOR COURTESY SWITCH CONTINUITY

Switch position	Tester connection	Specified condition
ON (SW pin released)	1 - 2 - 3	Continuity
OFF (SW pin pushed in)	-	No continuity

If continuity is not as specified, replace the switch.

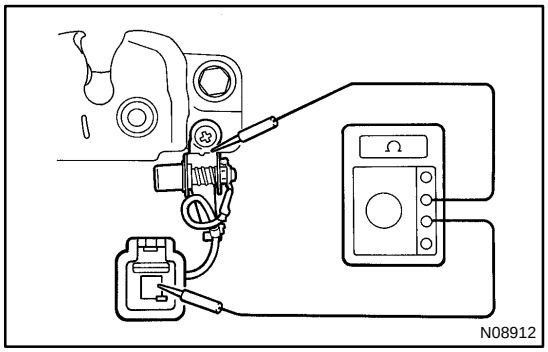

5. INSPECT LUGGAGE ROOM LIGHT SWITCH CONTINUITY

Condition	Tester connection	Specified condition
ON (SW pin released)	1 - Switch body	Continuity
OFF (SW pin pushed in)	1 - Switch body	No continuity

If continuity is not as specified, replace the switch.

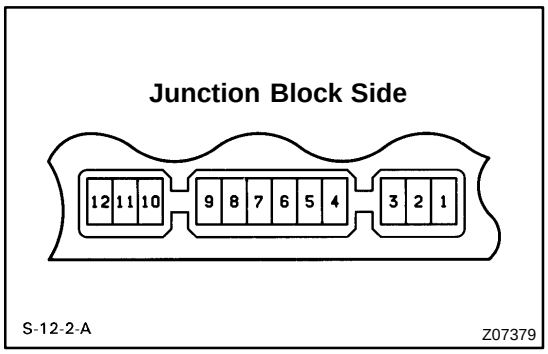

6. INSPECT INTEGRATION RELAY CIRCUIT

Remove the relay from junction block and inspect the connector on the junction block side, as shown in the chart.

Tester connection	Condition	Specified condition
4 - Ground	Courtesy Switch Position OFF (Door closed)	No continuity
4 - Ground	Courtesy Switch Position ON (Door opened)	Continuity
10 - Ground	Constant	Continuity
1 - Ground	Constant	Battery positive voltage
7 - Ground	Ignition switch position / LOCK or ACC	No voltage
7 - Ground	Ignition switch position / ON	Battery positive voltage

If circuit is as specified, try replacing the relay with a new one. If the circuit is not as specified, inspect the circuits connected to other parts.

7. INSPECT DOOR KEY LOCK AND UNLOCK SWITCH CIRCUIT

See page DI-656

8. INSPECT DOOR UNLOCK DETECTION SWITCH CIRCUIT

See page DI-638

BACK-UP LIGHT SYSTEM

LOCATION

BE0E1-01

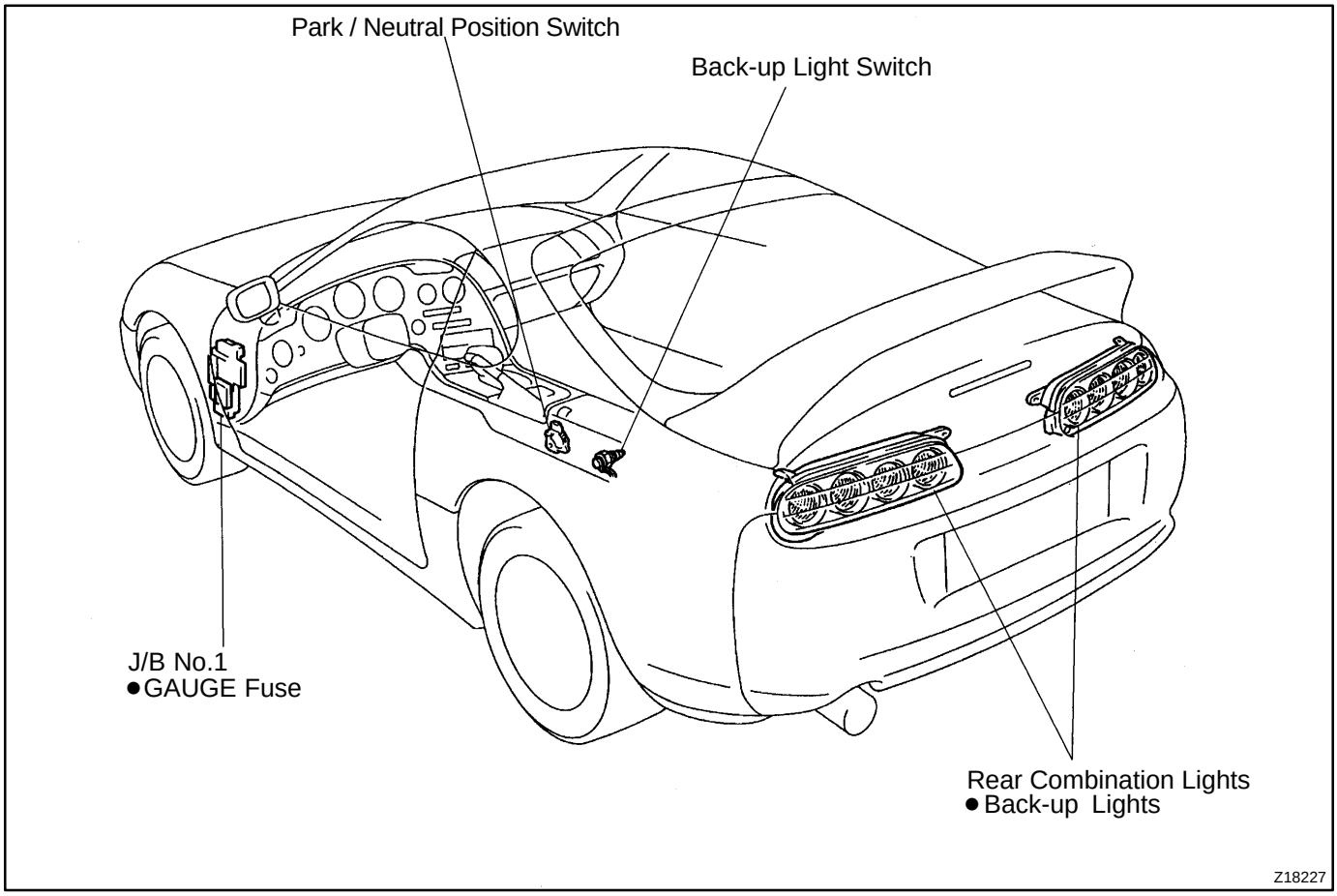

BE0E2-02

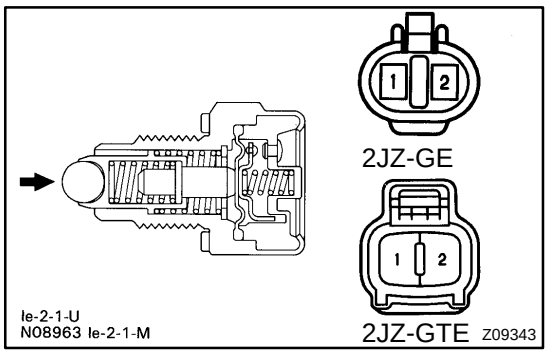

INSPECTION

1. INSPECT BACK-UP LIGHT SWITCH CONTINUITY

Switch position	Tester connection	Specified condition
Free	1 - 2	No continuity
Push	1 - 2	Continuity

If continuity is not as specified, replace the switch.

2. INSPECT PARK/NEUTRAL POSITION SWITCH MALFUNCTION

2JZ-GE: See page DI-354

2JZ-GTE: See page DI-423

STOP LIGHT SYSTEM

LOCATION

BE0E3-01

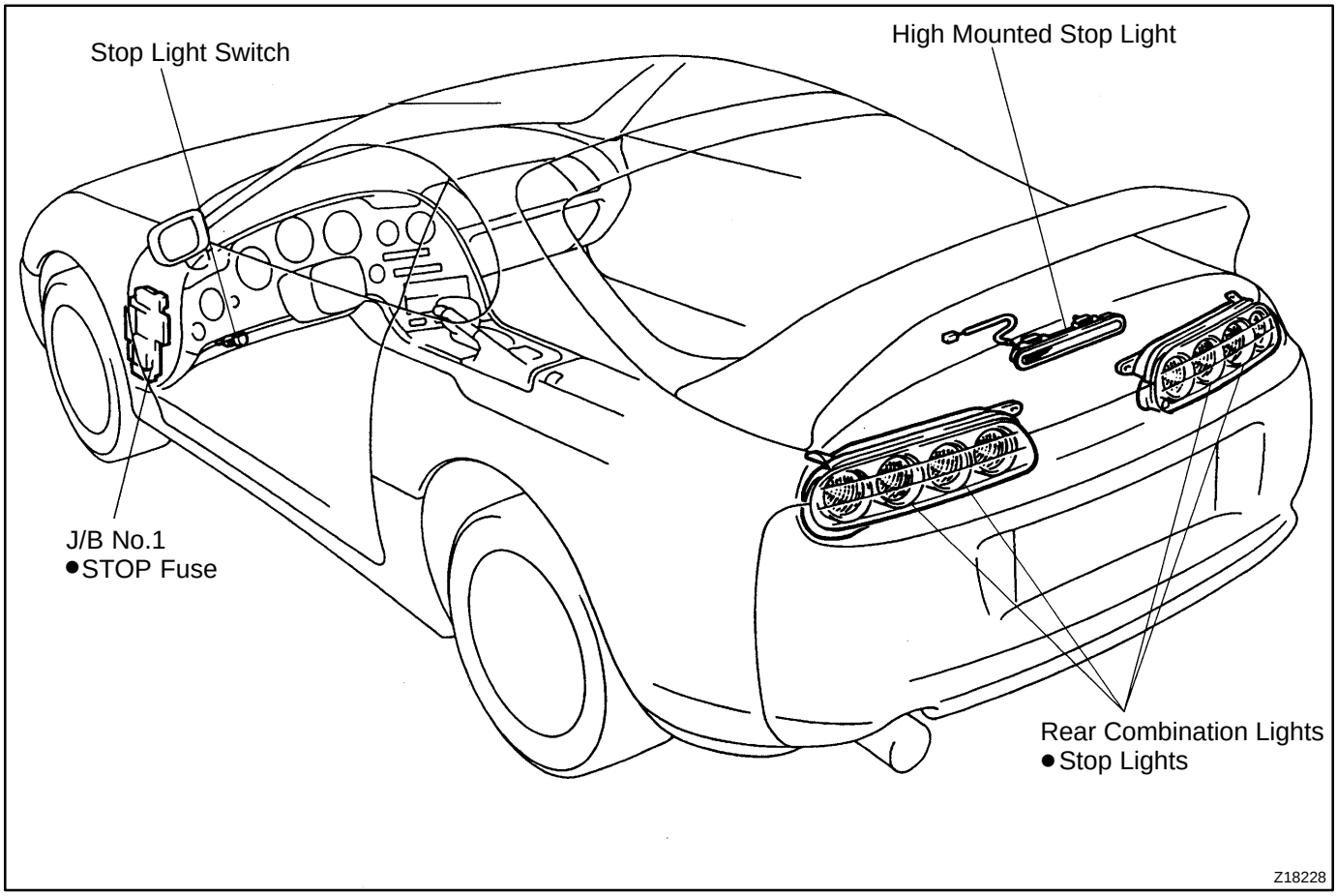

BE0E4-01

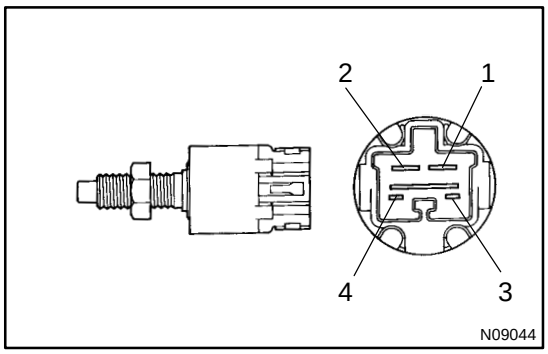

INSPECTION

INSPECT STOP LIGHT SWITCH CONTINUITY

Switch position	Tester connection	Specified condition
Switch pin free (Pedal depressed)	1 - 2	Continuity
Switch pin pushed in (Pedal released)	3 - 4	Continuity

If continuity is not as specified, replace the switch.

WIPER AND WASHER SYSTEM

LOCATION

BE0E5-01

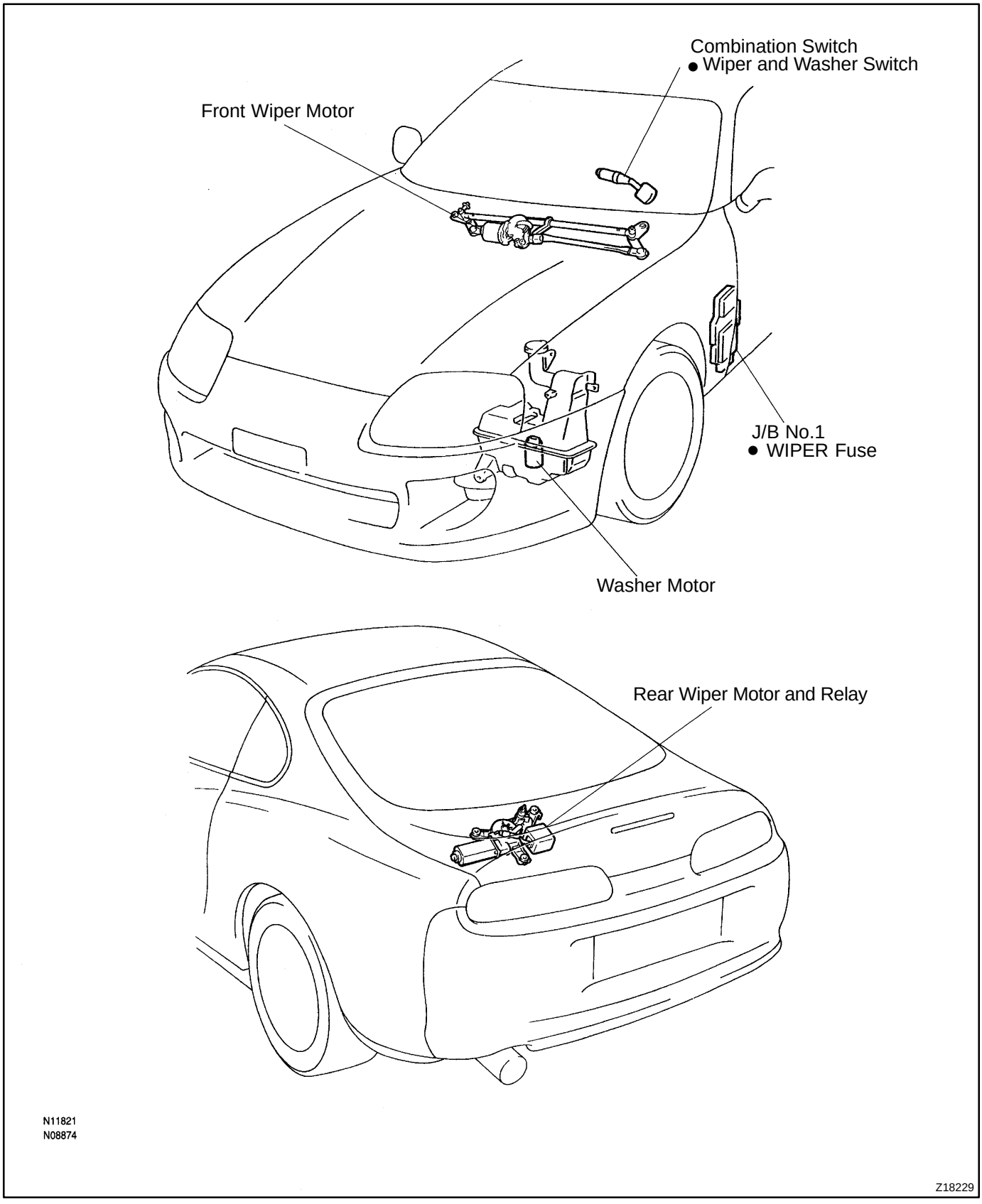

BE0E6-02

INSPECTION

1. INSPECT FRONT WIPER AND WASHER SWITCH CONTINUITY

Switch position	Tester connection	Specified condition
Wiper OFF	B4 - B7	Continuity
Wiper OFF and MIST	B7 - B18	Continuity
Wiper INT	B4 - B7	Continuity
Wiper INT and MIST	B7 - B18	Continuity
Wiper LO	B7 - B18	Continuity
Wiper LO and MIST	B7 - B18	Continuity
Wiper HI	B13 - B18	Continuity
Wiper HI and MIST	B7 - B13 B13 - B18	Continuity
Wiper ON	B8 - B16	Continuity

If continuity is not as specified, replace the switch.

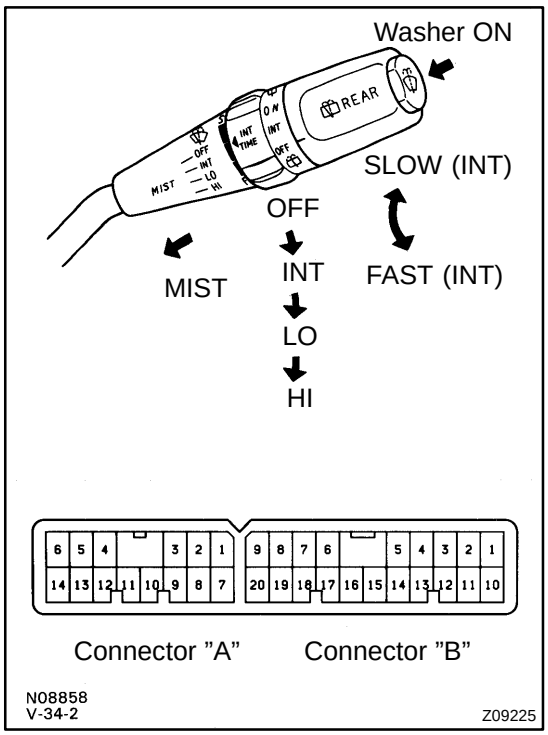

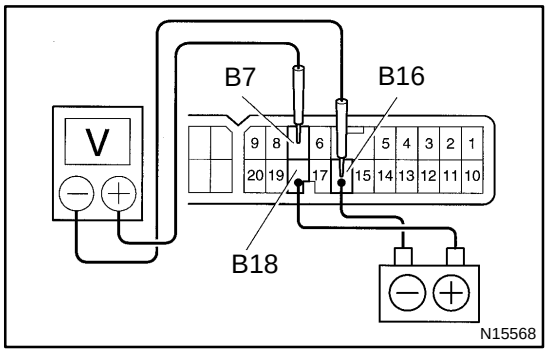

2. INSPECT FRONT WIPER INTERMITTENT OPERATION

(a) Turn the wiper switch to INT position.

(b) Turn the intermittent time control switch to FAST position.

(c) Connect the positive (+) lead from the battery to terminal B18 and the negative (-) lead to terminal B16.

(d) Connect the positive (+) lead from the voltmeter to terminal B7 and the negative (-) lead to terminal B16, check that the meter needle indicates battery positive voltage.

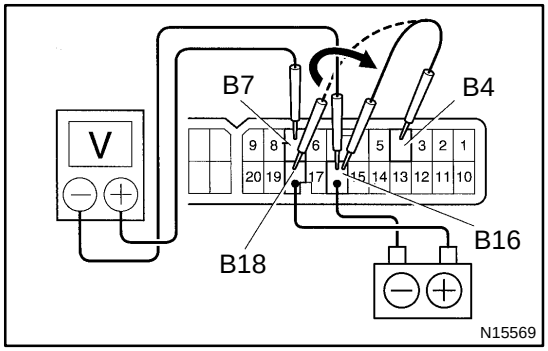

(e) After connecting terminal B4 to terminal B18, connect to terminal it to terminal B16, check the voltage rises from 0 V to battery voltage with in the times, as shown in the table.

INT time control switch position	Voltage
FAST	Approx. 1 - 3 sec. Battery positive voltage 0 V
SLOW	Approx. 10 - 15 sec. Battery positive voltage 0 V

If operation is not as specified, replace the wiper and washer switch.

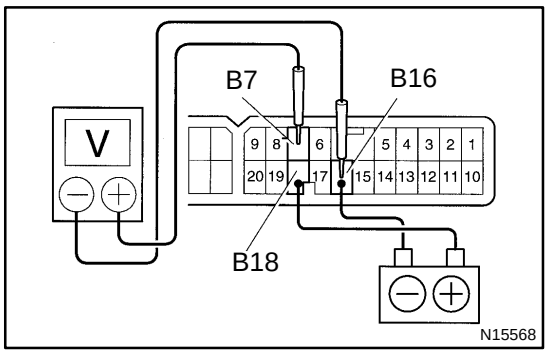

3. INSPECT FRONT WASHER LINKED OPERATION

(a) Connect the positive (+) lead from the battery to terminal B18 and the negative (-) lead to terminal B16.

(b) Connect the positive (+) lead from the voltmeter to terminal B7 and the negative (-) lead to terminal B16.

(c) Push in the washer switch, check that the voltage changes, as shown in the table.

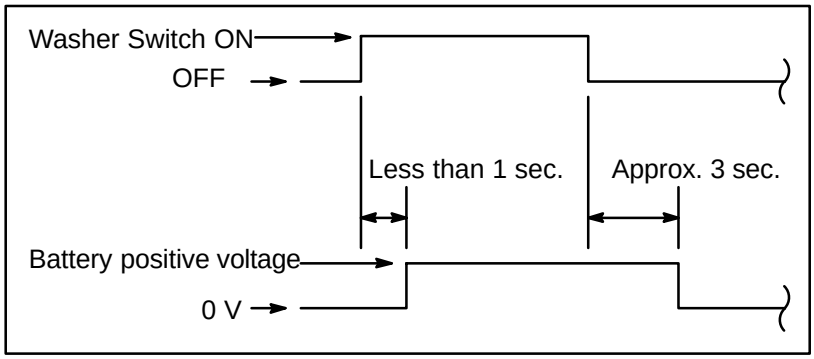

If operation is not as specified, replace the wiper and washer switch.

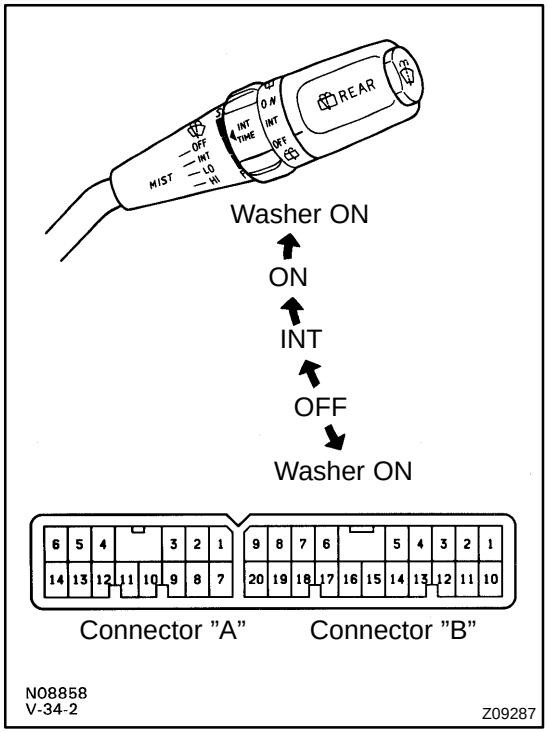

4. INSPECT REAR WIPER AND WASHER SWITCH CONTINUITY

Switch position	Tester connection	Specified condition
Washer 1	B2 - B16	Continuity
OFF	-	No continuity
INT	B10 - B16	Continuity
ON	B1 - B16	Continuity
Washer 2	B1 - B2 - B16	Continuity

If continuity is not as specified, replace the switch.

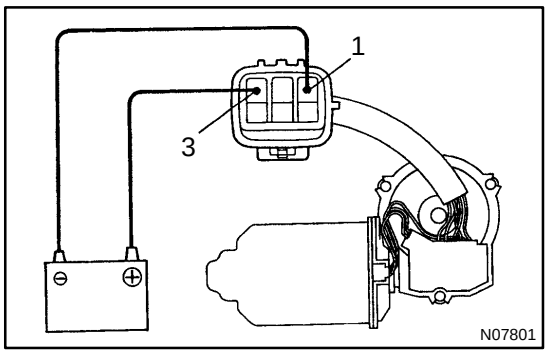

5. Low Speed:
INSPECT FRONT WIPER MOTOR OPERATION

Connect the positive (+) lead from the battery to terminal 3 and the negative (-) lead to terminal 1, check that the motor operates at low speed.

If operation is not as specified, replace the motor.

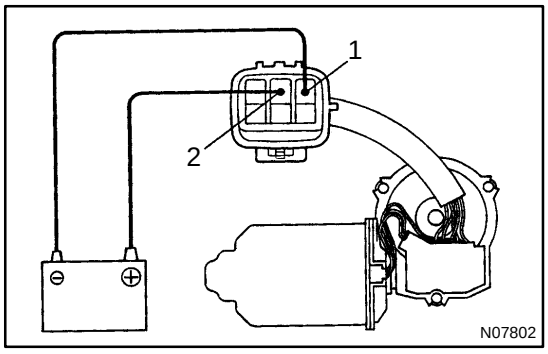

6. High Speed:
INSPECT FRONT WIPER MOTOR OPERATION

Connect the positive (+) lead from the battery to terminal 2 and the negative (-) lead to terminal 1, check that the motor operates at high speed.

If operation is not as specified, replace the motor.

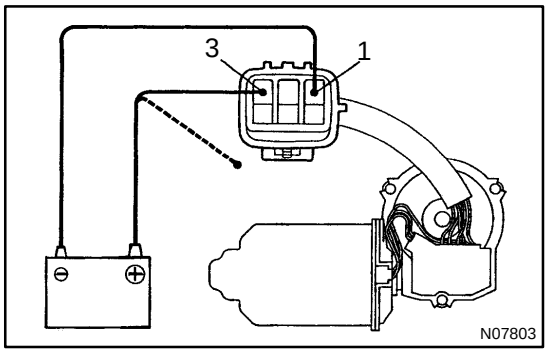

7. Stopping at Stop Position:
INSPECT FRONT WIPER MOTOR OPERATION

(a) Operate the motor at low speed and stop the motor operation anywhere by disconnecting positive (+) lead from terminal 3.

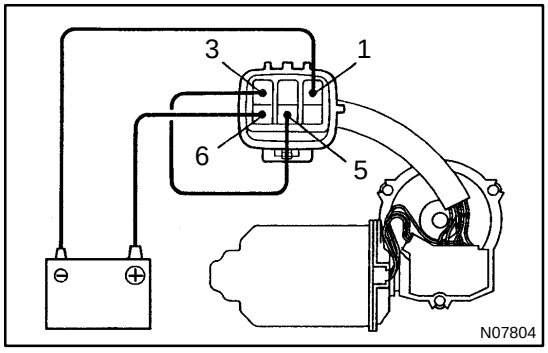

(b) Connect terminals 3 and 5.

(c) Connect the positive (+) lead from the battery to terminal 6 and negative (-) lead to terminal 1, check that the motor stops running at the stop position after the motor operates again.

If operation is not as specified, replace the motor.

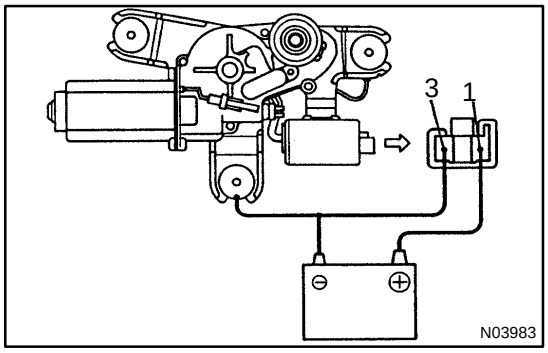

8. INSPECT REAR WIPER MOTOR AND RELAY OPERATION

(a) Connect the positive (+) lead from the battery to terminal 1, and the negative (-) lead to terminal 3 and the motor body, check that the motor operates.

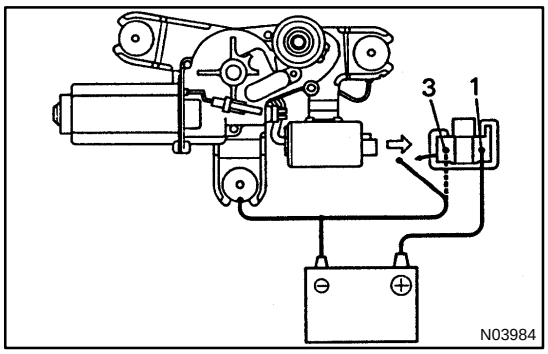

(b) Disconnect the negative (-) lead from terminal 3, check that the motor stops running at the stop position.

If operation is not as specified, replace the motor and relay.

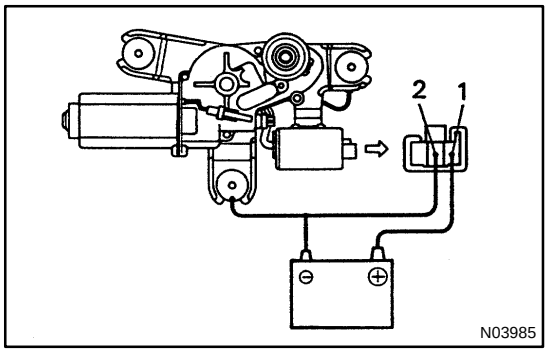

9. INSPECT INTERMITTENT OPERATION

Connect the positive (+) lead from the battery to terminal 1, and the negative (-) lead to terminal 2 and the motor body, check that the motor operates intermittently for 9 - 15 seconds.

If operation is not as specified, replace the motor and relay.

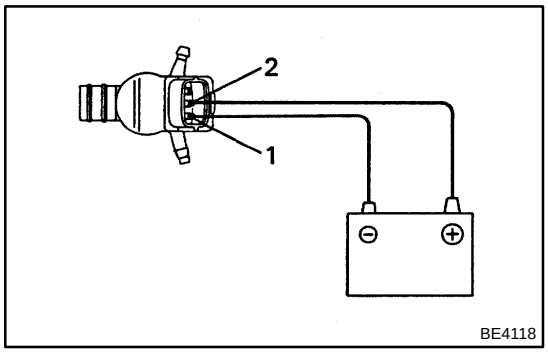

10. Front Washer:
INSPECT WASHER MOTOR OPERATION

Connect the positive (+) lead from the battery to terminal 2 and the negative (-) lead to terminal 1, check that the motor operates.

NOTICE:

These tests must be performed quickly (within 20 seconds) to prevent the coil from burning out.

If operation is not as specified, replace the motor.

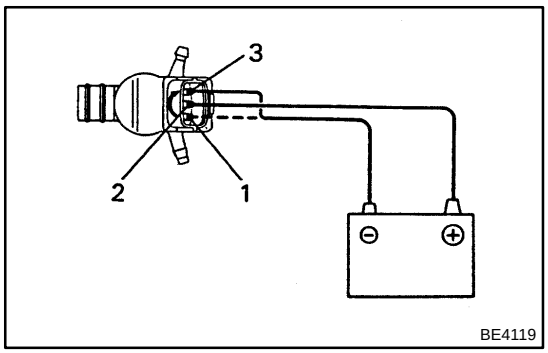

11. Rear Washer:
INSPECT WASHER MOTOR OPERATION

Connect the positive (+) lead from the battery to terminal 2 and the negative (-) lead to terminal 3, check that the motor operates.

NOTICE:

These tests must be performed quickly (within 20 seconds) to prevent the coil from burning out.

If operation is not as specified, replace the motor.

COMBINATION METER

LOCATION

BE0E7-01

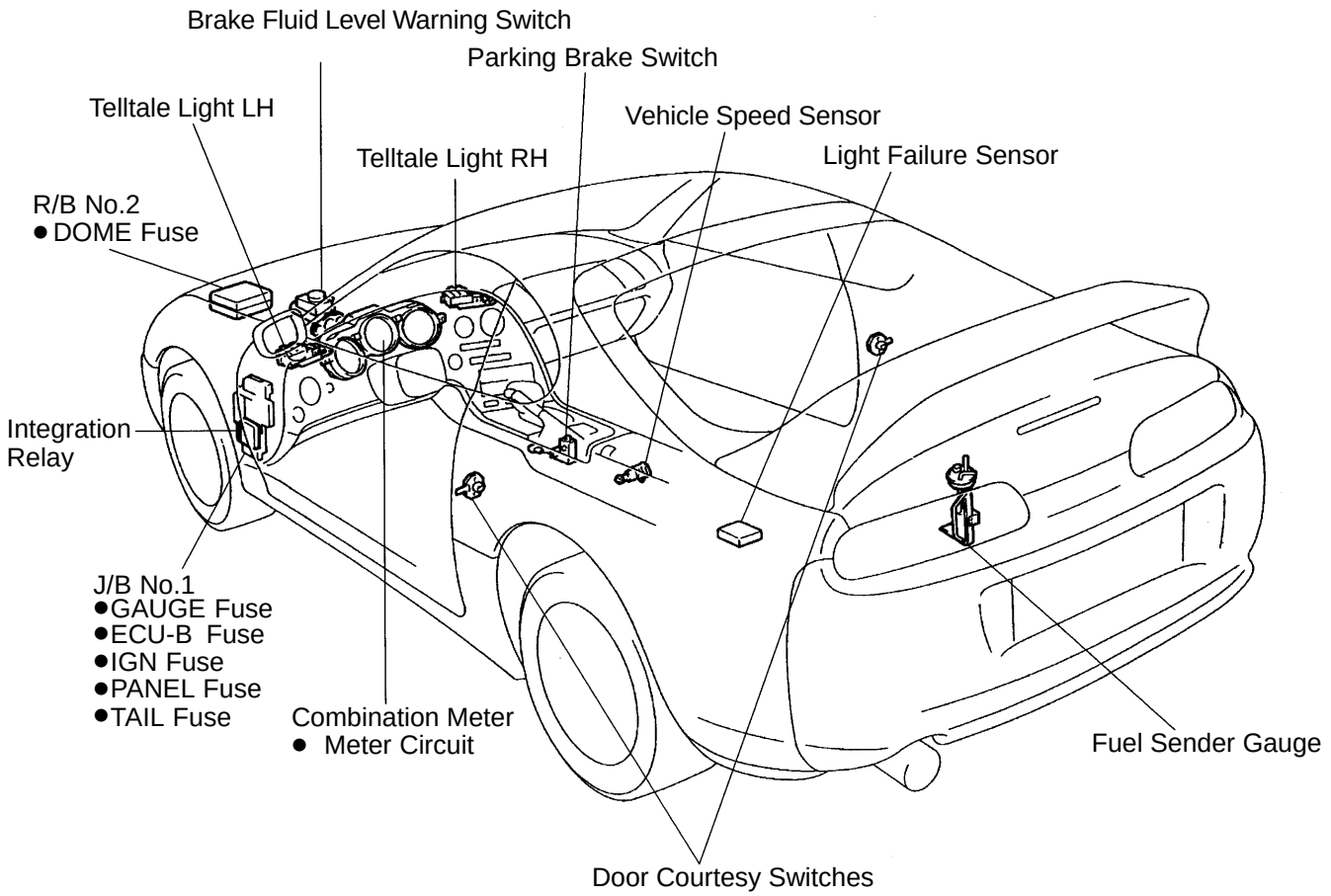

2JZ-GE

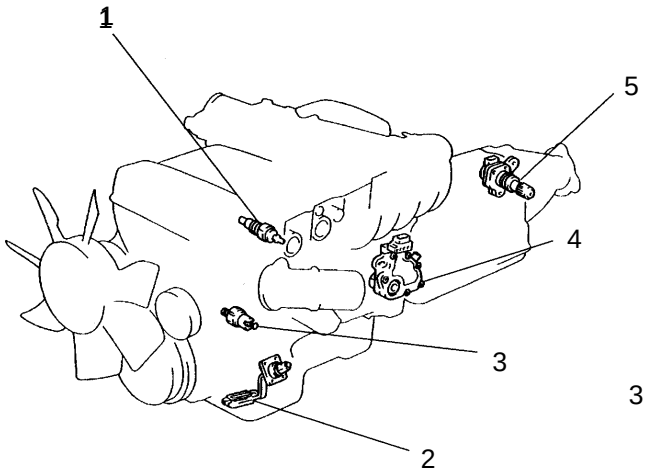

2JZ-GTE

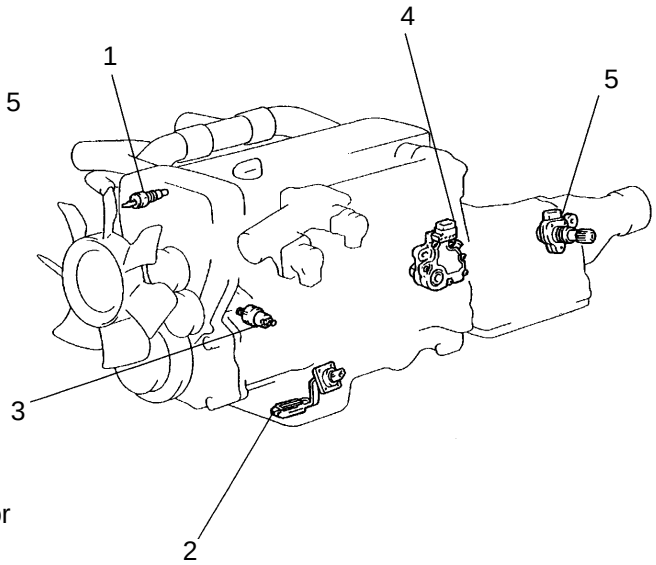

1 : Engine Coolant Temperature Sensor
2 : Engine Oil Level Sensor
3 : Low Oil Pressure Warning Switch
4 : Park/Neutral Position Switch
5 : Vehicle Speed Sensor

N16602
N09801 N09802

Z18230

BE0E8-01

CIRCUIT

1. METER:

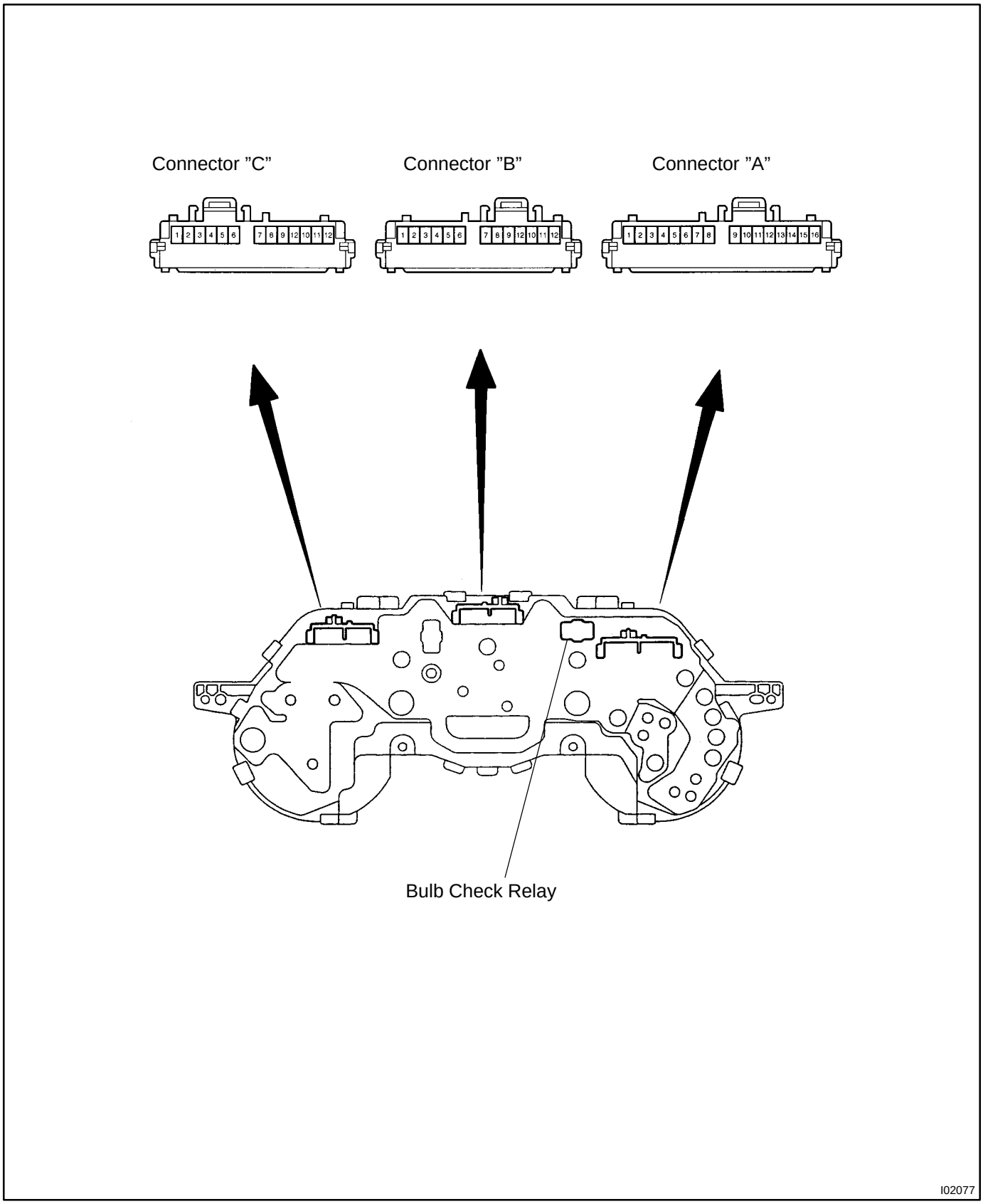

(F) :Fuel Gauge
(E) :Engine Coolant Temperature Gauge
(T) :Tachometer
(S) :Speedometer
D.R.L. :Daytime Running Light
* :Engine Oil Level Delay Circuit

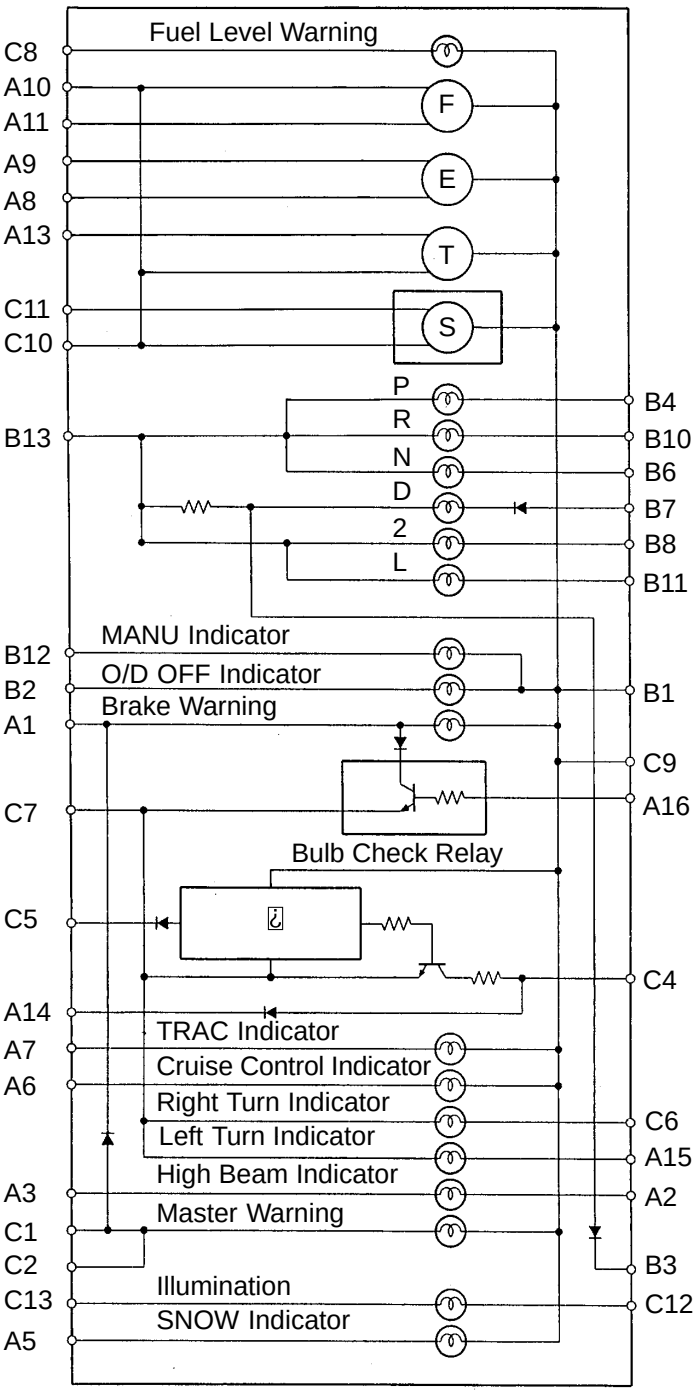

No.		Wire Harness Side
A	1	Brake Fluid Level Warning Switch Parking Brake Switch
	2	USA:TAIL (RH) Fuse, PANEL Fuse CANADA:D.R.L. No.3 Relay
	3	Headlight Dimmer Switch
	5	ECT ECU
	6	Cruise Control ECU
	7	TRAC ECU
	8	Ground (Engine)
	9	Engine Coolant Temperature Sender Gauge
	10	Fuel Sender Gauge
	11	Ground (Signal)
	13	Igniter
	14	Generator L Terminal
	15	Turn Signal Switch
	16	Starter Relay
		Park/Neutral Position Switch (A/T Vehicle) Clutch Start Switch (M/T Vehicle)
B	1	GAUGE Fuse
	2	O/D OFF Switch
	3	USA:TAIL (RH) Fuse, PANEL Fuse CANADA:D.R.L. No.3 Relay
	4	Park/Neutral Position Switch (P)
	6	Park/Neutral Position Switch (N)
	7	Park/Neutral Position Switch (D)
	8	Park/Neutral Position Switch (2)
	10	Park/Neutral Position Switch (R)
	11	Park/Neutral Position Switch (L)
	12	ECT ECU
	13	Ground (Power)
C	1	Telltail Light RH (Terminal 11)
	2	Telltail Light LH (Terminal 1)
	4	Telltail Light LH (Terminal 6)
	5	Engine Oil Level Sensor
	6	Turn Signal Switch
	7	Ground (Power)
	8	Fuel Sender Gauge
	9	GAUGE Fuse
	10	Vehicle Speed Sensor (Terminal 2)
	11	Vehicle Speed Sensor (Terminal 3)
	12	USA:TAIL (RH) Fuse, PANEL Fuse CANADA:D.R.L. No.3 Relay
	13	Light Control Rheostat

I02078

2. TELLTALE LIGHT:

Telltale Light LH:

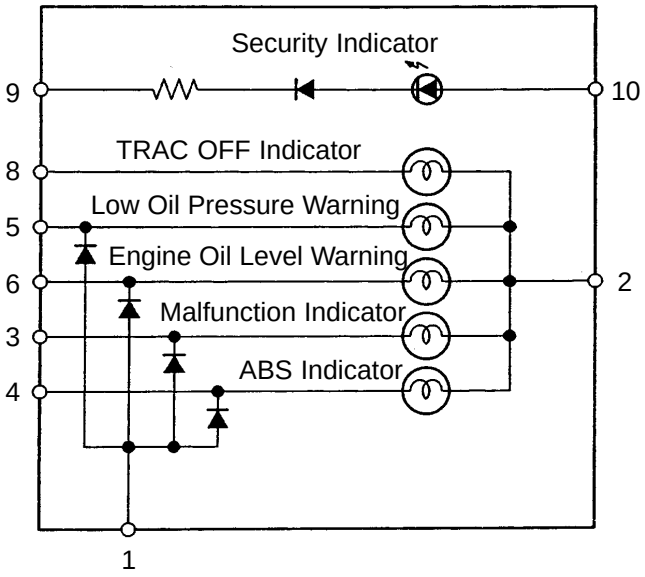

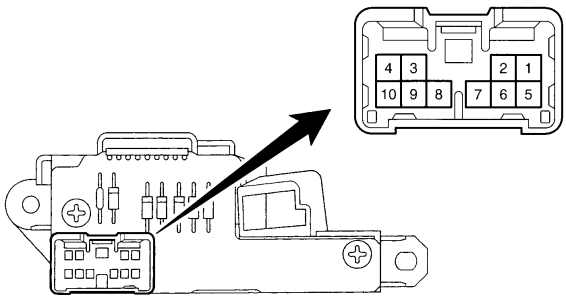

No.	Wire Harness Side
1	Combination Meter (Terminal B2)
2	GAUGE Fuse
3	ECM
4	ECM
5	Low Oil Pressure Warning Switch
6	Combination Meter (Terminal B4)
8	TRAC ECU, Traction Solenoid Relay
9	Ground
10	Theft Deterrent and Door Lock ECU

Telltale Light RH:

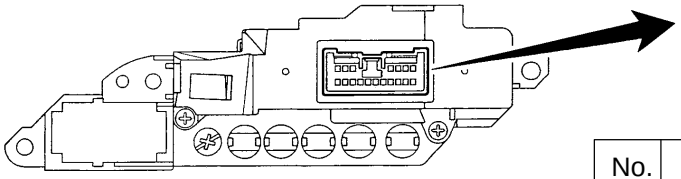

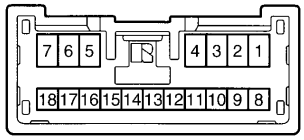

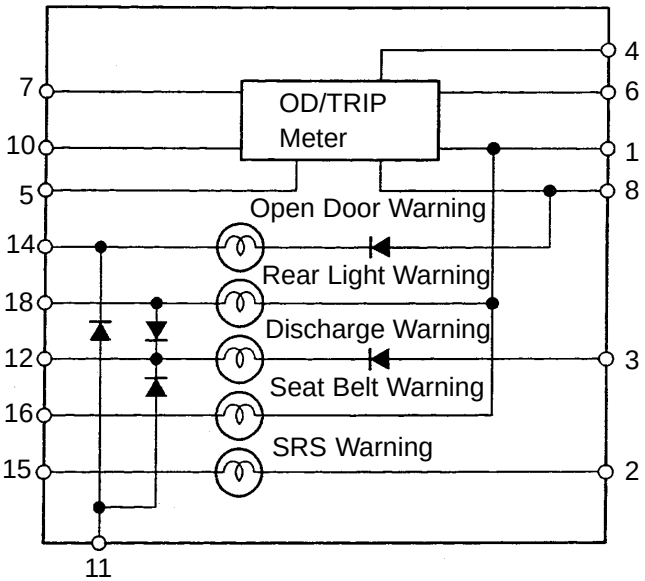

No.	Wire Harness Side
1	GAUGE Fuse
2	ECU-B Fuse
3	IGN Fuse
4	PANEL Fuse
5	Vehicle Speed Sensor (Terminal 3)
6	PPS ECU, Cruise Control ECU, ECM Air Conditioning Amplifier
7	Ground
8	DOME Fuse
10	Light Control Rheostat
11	Combination Meter (Terminal B1)
12	Generator Terminal
14	Door Courtesy Switch
15	Center Airbag Sensor
16	Integration Relay (Terminal 9)
18	Light Failure Sensor

I02079 I02081
I02082
I02080

I05022

BE1L4-01

INSPECTION

1. INSPECT SPEEDOMETER ON-VEHICLE

Using a speedometer tester, inspect the speedometer for allowable indication error and check the operation of the odometer.
HINT:
Tire wear and tire over or under inflation will increase the indication error.
If error is excessive, replace the speedometer.

USA (mph)		CANADA (km/h)	
Standard indication	Allowable range	Standard indication	Allowable range
20	18 - 24	20	17 - 24
40	38 - 44	40	38 - 46
60	56 - 66	60	57.5 - 67
80	78 - 88	80	77 - 88
100	98 - 110	100	96 - 109
120	118 - 132	120	115 - 130
		140	134 - 151.5
		160	153 - 173

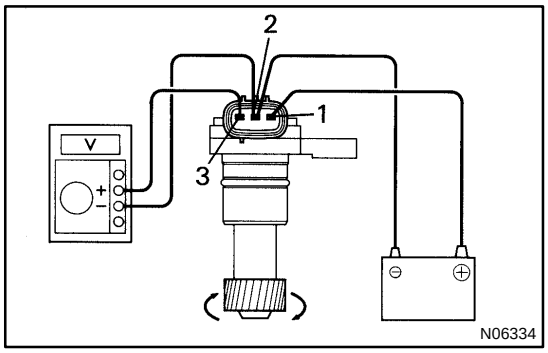

2. INSPECT VEHICLE SPEED SENSOR OPERATION

(a) Connect the positive (+) lead from battery to terminal 1 and negative (-) lead to terminal 2.
(b) Connect the positive (+) lead from tester to terminal 3 and negative (-) lead to terminal 2.
(c) Rotate shaft.
(d) Check that there is voltage change from approx. 0 V to 11 V or more between terminals 2 and 3.

HINT:
The voltage change should be 4 times for every revolution of the speed sensor shaft.
If operation is not as specified, replace the sensor.

3. INSPECT TACHOMETER ON-VEHICLE

(a) Connect a tune-up test tachometer, and start the engine.

NOTICE:

Reversing the connection of the tachometer will damage the transistors and diodes inside.

(b) Compare the tester and tachometer indications.

If error is excessive, replace the tachometer.

RPM (DC 13.5 V, 25 ˚C (77˚F))

Standard indication (rpm)	Allowable range (rpm)
700	630 - 770
1,000	915 - 1,115
2,000	1,920 - 2,220
3,000	2,890 - 3,350
4,000	3,940 - 4,400
5,000	5,025 - 5,425
6,500	6,650 - 6,950
7,000	7,025 - 7,625

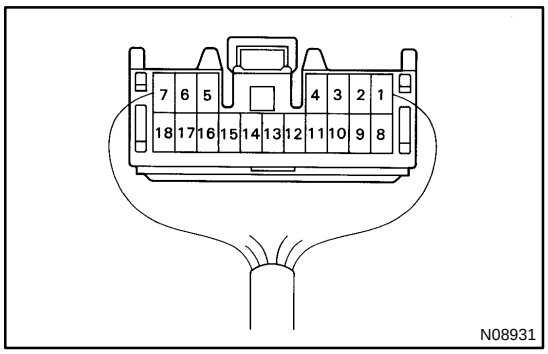

4. INSPECT OD/TRIP METER (in Telltale Light RH)

(a) Remove the telltale light with connector still connected.

(b) Check the continuity and voltage.

Tester connection	Condition	Specified condition
7 - Ground*1	Constant	Continuity
1 - Ground*1	Ignition Switch "ON" position	Battery positive voltage
4 - Ground*1	Light Control Switch "TAIL" or "HEAD" position	Battery positive voltage
5 - 7*1	Ignition Switch ON Drive the vehicle slowly	0V ↔ Battery positive voltage
6 - 7*2	Ignition Switch ON Drive the vehicle slowly	0V ↔ more than 5V
8 - Ground*1	Constant	Battery positive voltage
10 - Ground*1	Ignition Switch ON, Light Control Switch TAIL or HEAD, Turn the light control rheostat knob to clockwise	6V → 0V

*1: If continuity or voltage are not as specified, check vehicle side.

*2: If voltage is not as specified, replace the telltale light.

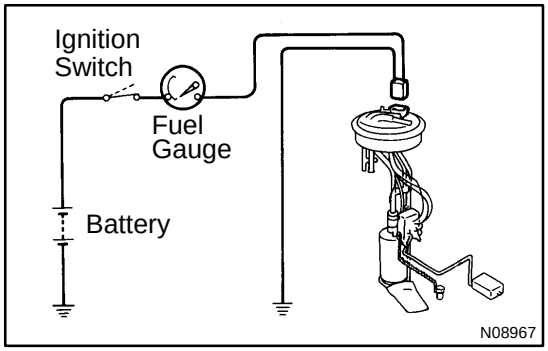

5. INSPECT FUEL RECEIVER GAUGE OPERATION

(a) Disconnect the connector from the sender gauge assembly.

(b) Turn the ignition switch ON, check that the receiver gauge needle indicates EMPTY.

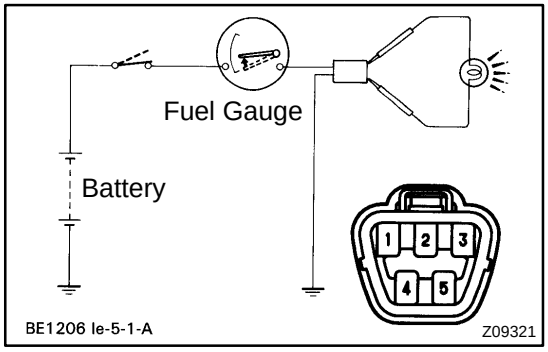

(c) Connect terminals 2 and 3 on the wire harness side connector through a 3.4 W test bulb.

(d) Turn the ignition switch ON, and check that the bulb lights up and that receiver gauge needle moves toward the full side.

HINT:

Because of the silicon oil in the gauge, it will take a short time for the needle to stabilize.

If operation is not as specified, inspect the receiver gauge resistance.

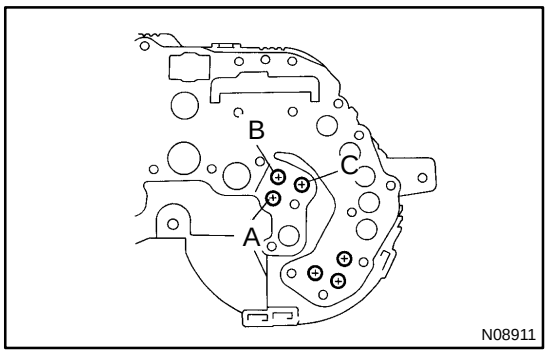

6. INSPECT FUEL RECEIVER GAUGE RESISTANCE

Measure the resistance between terminals.

Between terminals	Resistance (Ω)
A - B	Approx. 269.7
A - C	Approx. 123.5
B - C	Approx. 146.2

If resistance value is not as specified, replace the fuel receiver gauge.

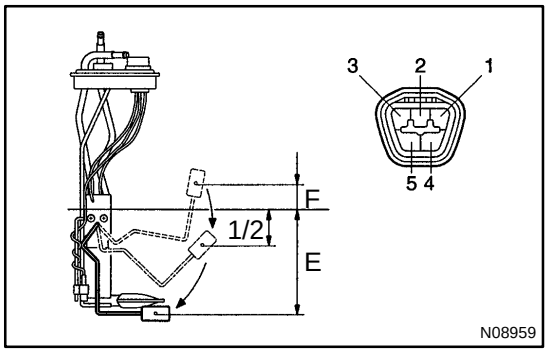

7. INSPECT FUEL SENDER GAUGE RESISTANCE

Measure the resistance between terminals 2 and 3 for each float position.

Float position: mm (in.)	Resistance (Ω)
F: Approx. 33.8 (1.331)	Approx. 4.0
1/2: Approx. 44.8 (1.764)	Approx. 55.0
E: Approx. 141.1 (5.555)	Approx. 107.0

If resistance value is not as specified, replace the sender gauge.

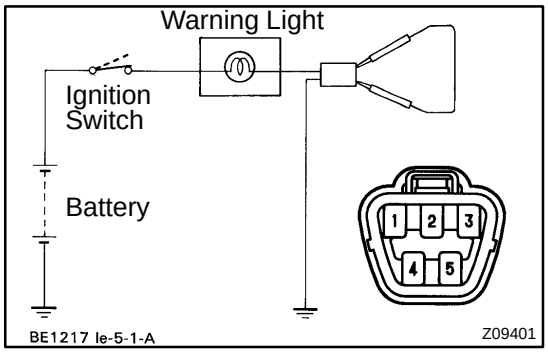

8. INSPECT FUEL LEVEL WARNING LIGHT

(a) Disconnect the connector from the sender gauge.

(b) Connect terminals 1 and 3 on the wire harness side connector.

(c) Turn the ignition switch ON, check that the warning light lights up.

If the warning light does not light up, test the bulb or inspect wire harness.

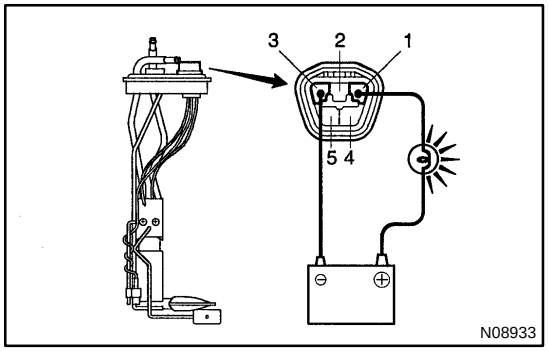

9. INSPECT FUEL LEVEL WARNING SWITCH OPERATION

(a) Apply battery positive voltage between terminals 1 and 3 through a 3.4 W test bulb, check that the bulb lights up.

HINT:

It will take a short time for the bulb to light up.

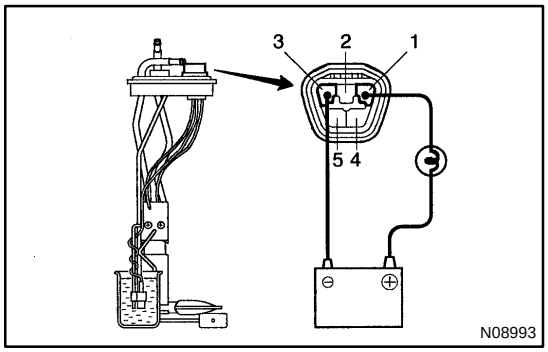

(b) Submerge the switch in fuel, check that the bulb goes out.

If operation is not as specified, replace the sender gauge.

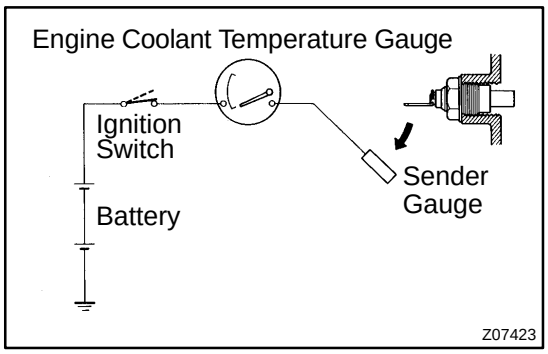

10. INSPECT ENGINE COOLANT TEMPERATURE RECEIVER GAUGE OPERATION

(a) Disconnect the connector from the sender gauge.

(b) Turn the ignition switch ON, check that the receiver gauge needle indicates COOL.

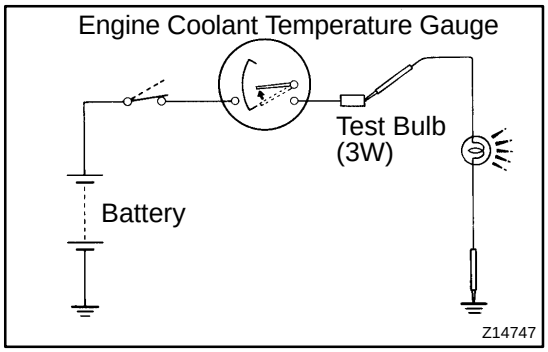

(c) Ground terminal on the wire harness side connector through a 3 W test bulb.

(d) Turn the ignition switch ON, check that the bulb lights up and that the receiver gauge needle moves toward the hot side.

If operation is as specified, replace the sender gauge.

Then recheck the system.

If operation is not as specified, measure the receiver gauge resistance.

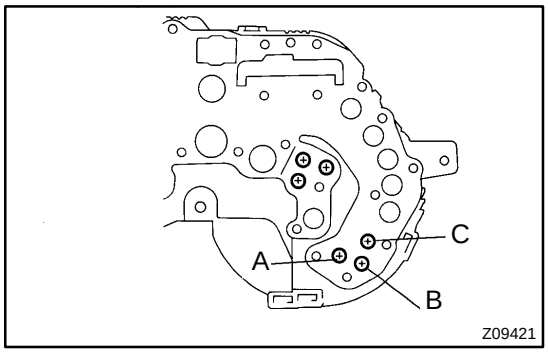

11. INSPECT ENGINE COOLANT TEMPERATURE RECEIVER GAUGE RESISTANCE

Measure the resistance between terminals.

HINT:

Connect the test leads so that the current from the ohmmeter can flow according to the chart order.

Between terminals	Resistance (Ω)
A - B	Approx. 229.7
A - C	Approx. 54.0
B - C	Approx. 175.7

If resistance value is not as specified, replace the engine coolant temperature receiver gauge.

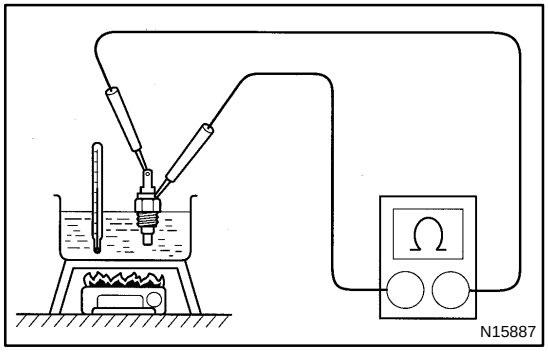

12. INSPECT ENGINE COOLANT TEMPERATURE SENDER GAUGE RESISTANCE

Measure the resistance between terminal and gauge body.

Temperature °C (°F)	Resistance (Ω)
50 (122.0)	160 ~ 240
120 (248.0)	17.1 ~ 21.2

If resistance value is not as specified, replace the engine coolant temperature sender gauge.

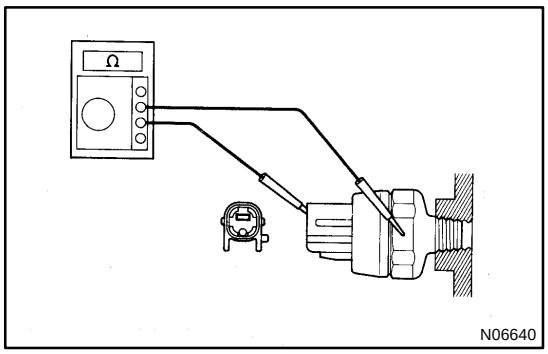

13. INSPECT LOW OIL PRESSURE SWITCH CONTINUITY

(a) Check that there is continuity between terminal and ground with the engine stopped.

(b) Check that there is no continuity between terminal and ground with the engine running.

HINT:

Oil pressure should be over 29 kPa (0.3 kgf/cm^2, 4.3 psi)

If operation is not as specified, replace the switch.

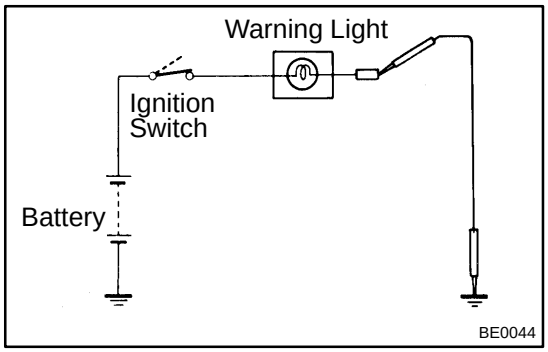

14. INSPECT LOW OIL PRESSURE WARNING LIGHT

(a) Disconnect the connector from the warning switch and ground terminal on the wire harness side connector.

(b) Turn the ignition switch ON, check that the warning light lights up.

If the warning light does not light up, test the bulb or inspect wire harness.

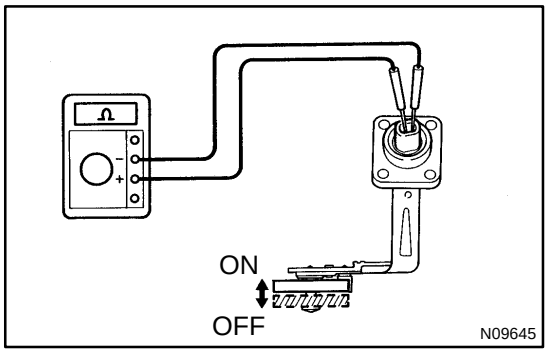

15. INSPECT ENGINE OIL LEVEL WARNING SWITCH CONTINUITY

(a) Check that there is continuity between terminal with the switch in each position.

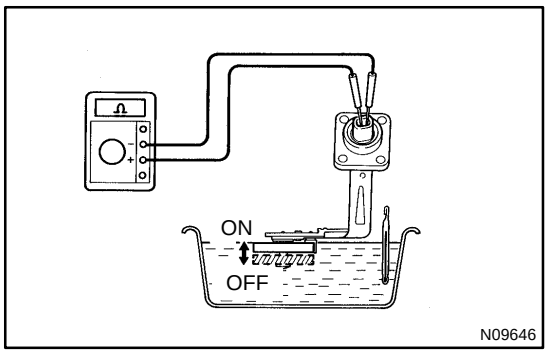

(b) Heat the switch to above 60˚C (140˚F) in an oil bath.

(c) Check that there is continuity between terminals with the switch ON (float up).

(d) Check that there is no continuity between terminals with the switch OFF (float down).

If operation is not as specified, replace the switch.

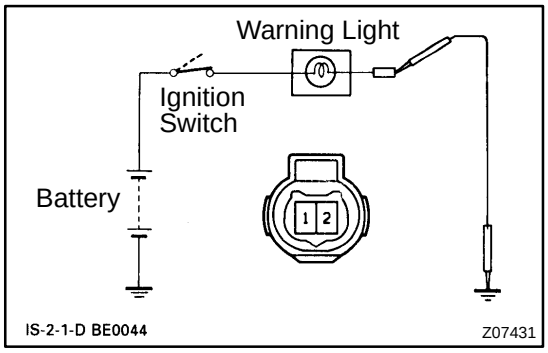

16. INSPECT ENGINE OIL LEVEL WARNING LIGHT

(a) Disconnect the connector from the switch.

(b) Ground terminal 1 on the wire harness connector.

(c) Turn the ignition switch ON. Check that the warning light lights up approximately 40 seconds later.

If the warning light does not light up, inspect bulb or wire harness.

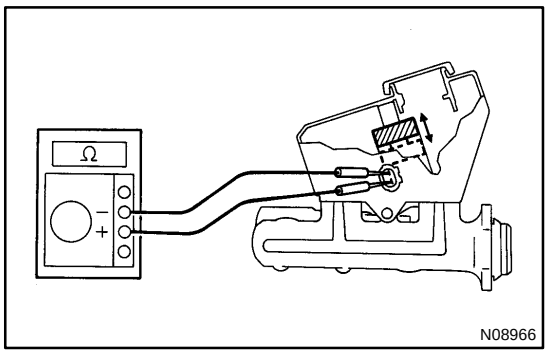

17. INSPECT BRAKE FLUID LEVEL WARNING SWITCH CONTINUITY

(a) Remove the reservoir tank cap and strainer.
(b) Disconnect the connector.
(c) Check that there is no continuity between terminals with the switch OFF (float up).
(d) Use syphon, etc. to take fluid out of the reservoir tank.
(e) Check that there is continuity between terminals with the switch ON (float down).
(f) Pour the fluid back in the reservoir tank.

If operation is not as specified, replace the switch.

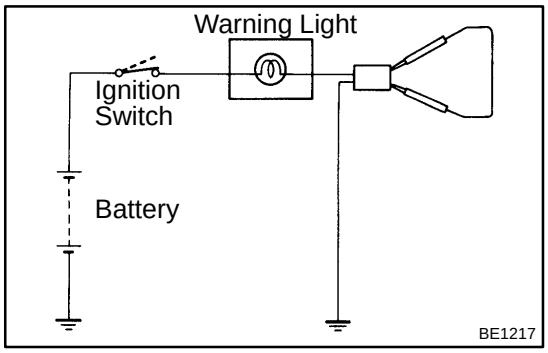

18. INSPECT BRAKE FLUID LEVEL WARNING LIGHT

(a) Disconnect the connector from the brake fluid warning switch.
(b) Release the parking brake pedal.
(c) Connect terminals on the wire harness side of the level warning switch connector.
(d) Start the engine, check that the warning light lights up.

If the warning light does not light up, test the bulb or wire harness.

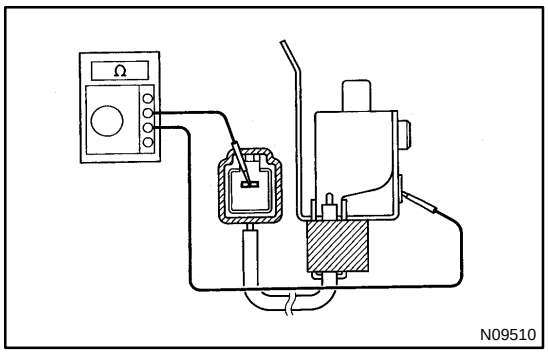

19. INSPECT PARKING BRAKE SWITCH CONTINUITY

(a) Check that there is continuity between terminal and switch body with the switch ON (switch pin released).
(b) Check that there is no continuity between terminal and switch body with the switch OFF (switch pin pushed in).

If operation is not as specified, replace the switch or inspect ground point.

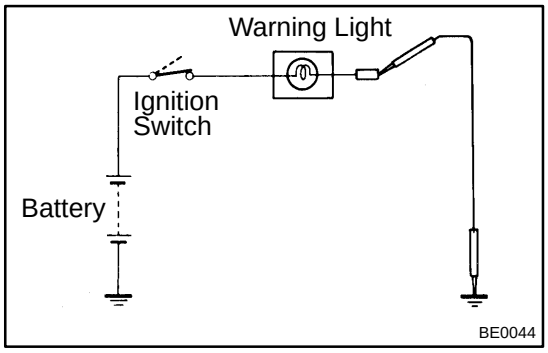

20. INSPECT PARKING BRAKE WARNING LIGHT

(a) Disconnect the connector from the parking brake switch and the brake fluid warning switch.
(b) Ground terminal on the wire harness side connector.
(c) Start the engine, check that the warning light lights up.

If the warning light does not light up, test the bulb or inspect wire harness.

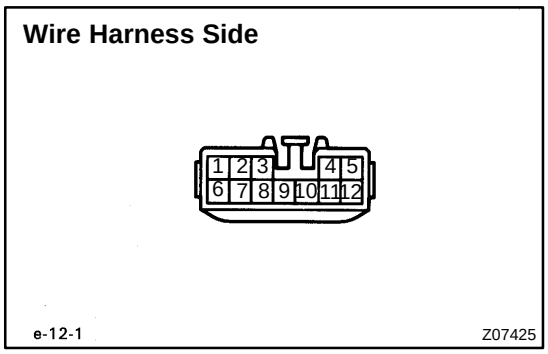

21. INSPECT LIGHT FAILURE SENSOR CIRCUIT

Disconnect the connector from the sensor and inspect the connector on the wire harness side, as shown.

Tester connection	Condition	Specified condition
1 - Ground	Constant	Continuity*
2 - Ground	Constant	Continuity*
9 - Ground	Constant	Continuity*
10 - Ground	Constant	Continuity*
11 - Ground	Constant	Continuity
12 - Ground	Constant	Continuity*
3 - Ground	Light control switch position OFF	No Voltage
3 - Ground	Light control switch position TAIL or HEAD	Battery positive voltage
4 - Ground	Ignition switch position LOCK or ACC	No voltage
4 - Ground	Ignition switch position ON	Battery positive voltage
7 - Ground	Stop light switch position OFF	No voltage
7 - Ground	Stop light switch position ON	Battery positive voltage
8 - Ground	Engine condition Stop	No voltage
8 - Ground	Engine condition Running	Battery positive voltage

*: There is the resistance because this circuit is grounded through the bulb.

If circuit is as specified, replace the sensor.

If the circuit is not as specified, inspect the circuits connected to other parts.

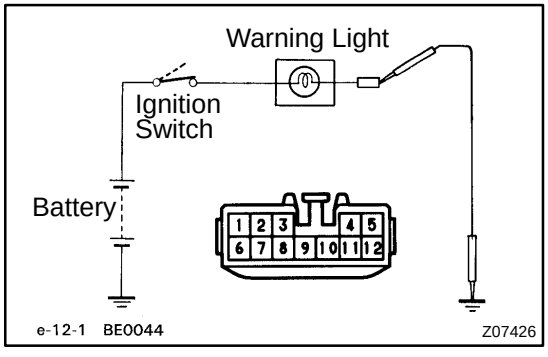

22. INSPECT LIGHT FAILURE WARNING LIGHT

(a) Disconnect the connector from the light failure sensor and ground terminal 4 on the wire harness side connector.

(b) Start the engine, check that the warning light lights up.

If the warning light does not light up, test the bulb or inspect wire harness.

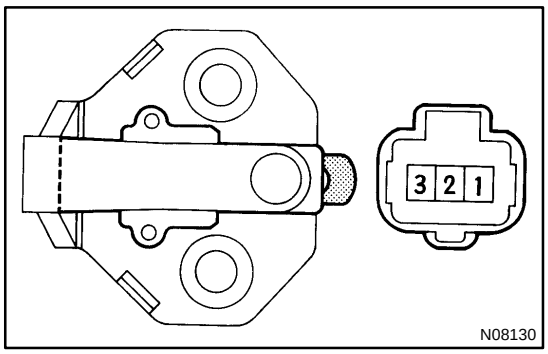

23. INSPECT DOOR COURTESY SWITCH CONTINUITY

Switch position	Tester connection	Specified condition
ON (SW pin released)	1 - 2, 2 - 3	Continuity
OFF (SW pin pushed in)	-	No continuity

If continuity is not as specified, replace the switch.

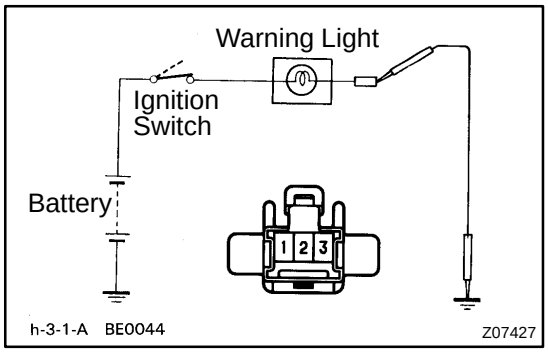

24. INSPECT OPEN DOOR WARNING LIGHT

Disconnect the connector from the door courtesy switch, ground terminal 1 on the wire harness side connector and check that the warning light lights up.

If the warning light does not light up, inspect the bulb or wire harness.

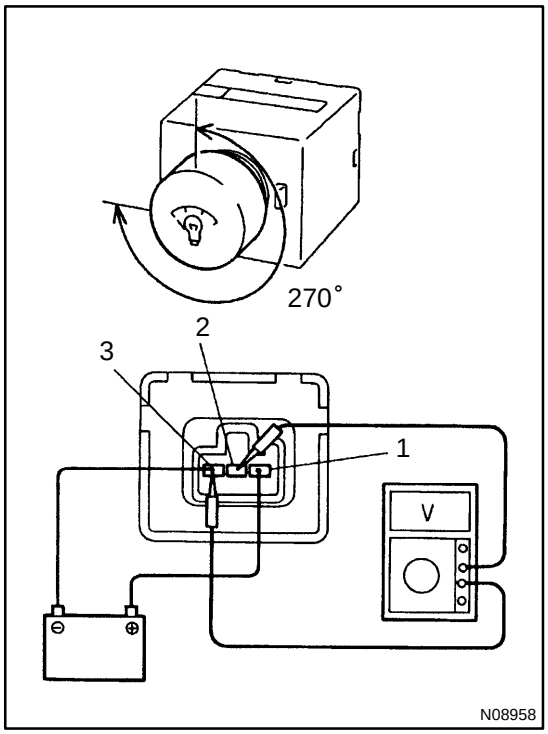

25. INSPECT LIGHT CONTROL RHEOSTAT

(a) Connect the positive (+) lead from the battery to terminal 1 and negative lead (-) to terminal 3.

(b) Connect the positive (+) lead from the voltmeter to terminal 2 and negative lead to terminal 3.

(c) Turn the rheostat knob and check that the voltage changes.

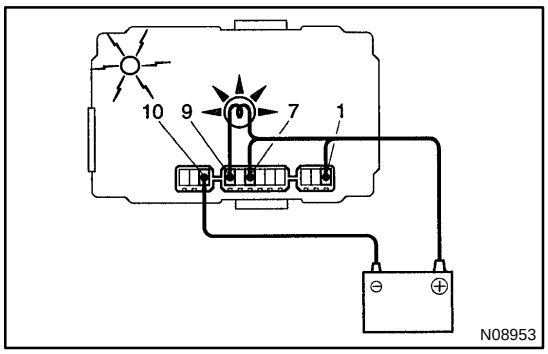

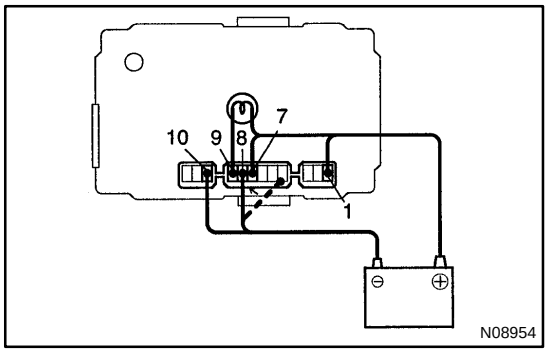

26. INSPECT INTEGRATION RELAY OPERATION

(a) Connect the positive (+) lead from the battery to terminals 1 and 7.

(b) Connect the positive (+) lead from the battery to terminal 9 through a 3.4 W test bulb.

(c) Check that the test bulb lights up and buzzer sounds for 4 - 8 seconds when the negative (-) lead from the battery is connected to terminal 10.

(d) Check that the buzzer sounding in (c) stops when the negative (-) lead from the battery is connected to terminl 8.

If operation is not as specified, replace the integration relay.

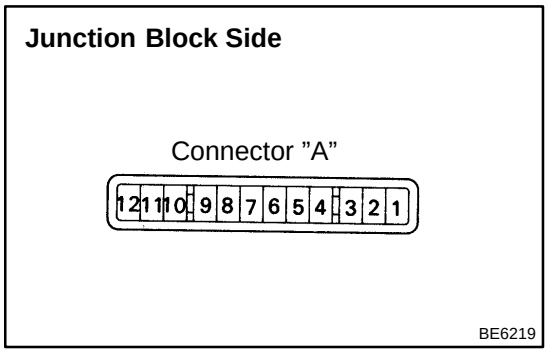

27. INSPECT RELAY CIRCUIT

Remove the relay from the junction block No. 1 and inspect the connectors on the junction block side.

Tester connection	Condition	Specified condition
4 - Ground	Driver's door open	Continuity
4 - Ground	Driver's door close	No continuity
5 - Ground	Ignition key Set	Continuity
5 - Ground	Ignition key remove	No continuity
8 - Ground	Driver's seat belt fasten	Continuity
8 - Ground	Driver's seat belt unfasten	No continuity
10 - Ground	Constant	Continuity
1 - Ground	Constant	Battery positive voltage
9 - Ground	Ignition switch position ON	Battery positive voltage
9 - Ground	Ignition switch position LOCK or ACC	No Voltage

If circuit is not as specified, tray replacing the relay with a new one.

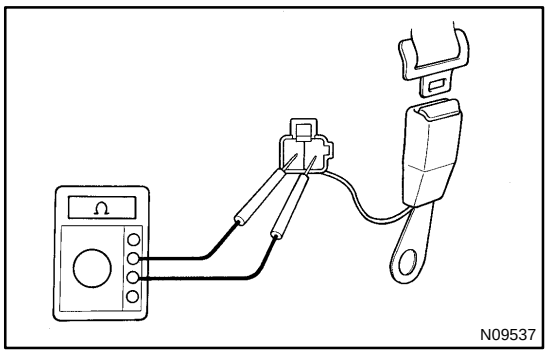

28. INSPECT BUCKLE SWITCH CONTINUITY

(a) Check that there is continuity between terminals 1 and 2 on the switch side connector with the switch ON (belt fastened).

(b) Check that there is no continuity between terminals 1 and 2 on the switch side connector with the switch OFF (belt unfastened).

If operation is not as specified, replace the seat belt inner belt.
If the circuit is not as specified, inspect the circuits connected to other parts.

ELECTRIC TENSION REDUCER SYSTEM

LOCATION

BE0EA-01

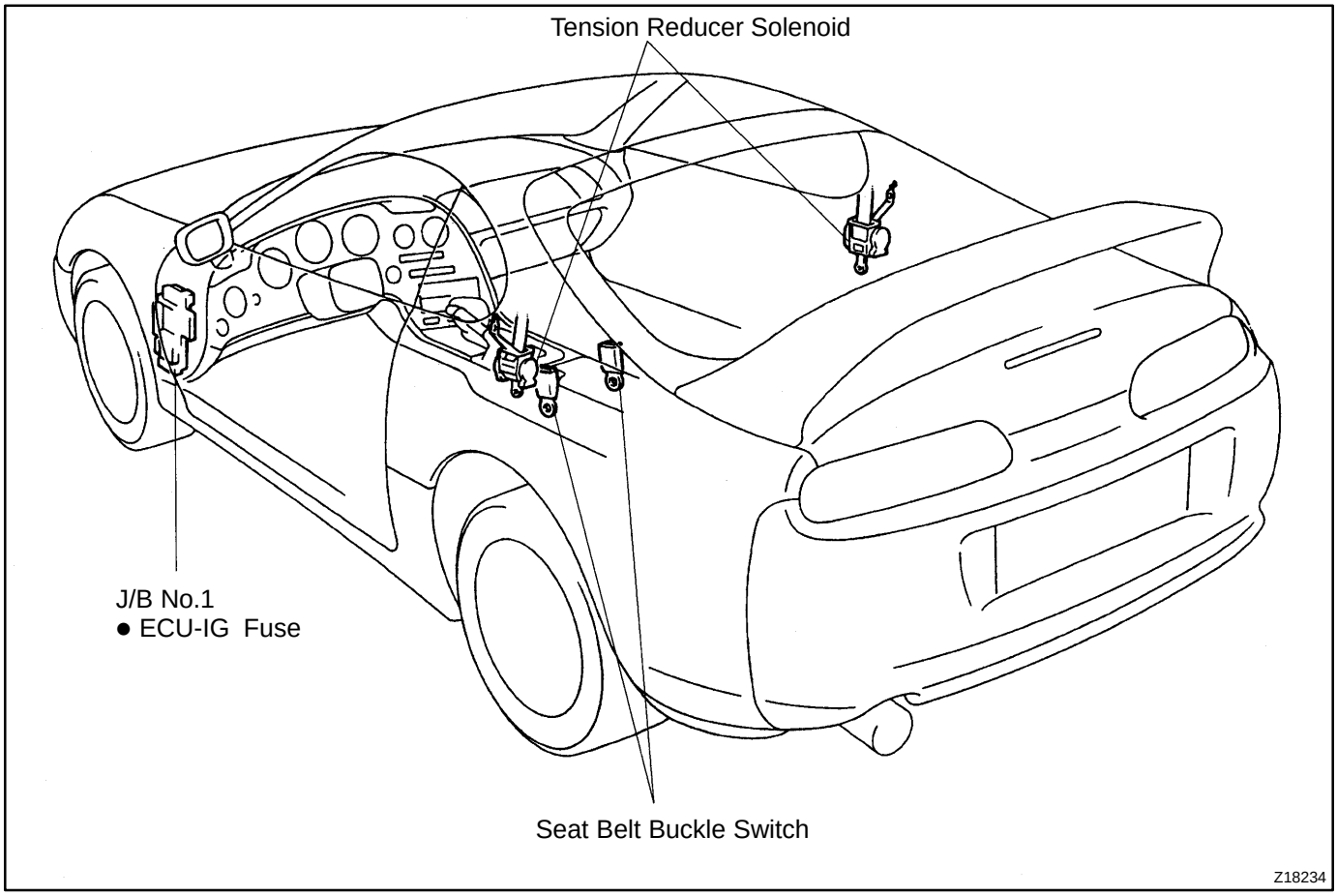

BE0EB-01

INSPECTION

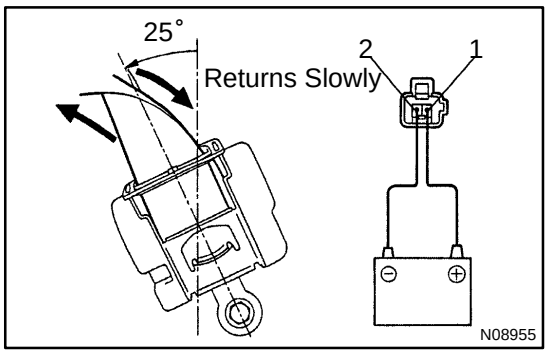

1. INSPECT TENSION REDUCER SOLENOID OPERATION

(a) Connect the positive (+) lead from the battery to terminal 1, and negative (-) lead to terminal 2.

(b) Pull the belt upward and check that the belt is slowly retracted when released.

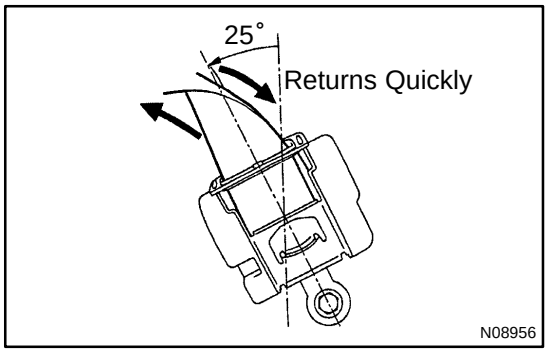

(c) Disconnect the lead from the battery.

(d) Pull the belt upward and check that the belt is retracted more quickly when released than in (b).

HINT:

Do not tilt the retractor.

If the operation is not as specified, replace the front seat outer belt assembly.

2. INSPECT BUCKLE SWITCH CONTINUITY

See page BE-43

DEFOGGER SYSTEM

LOCATION

BE0EC-01

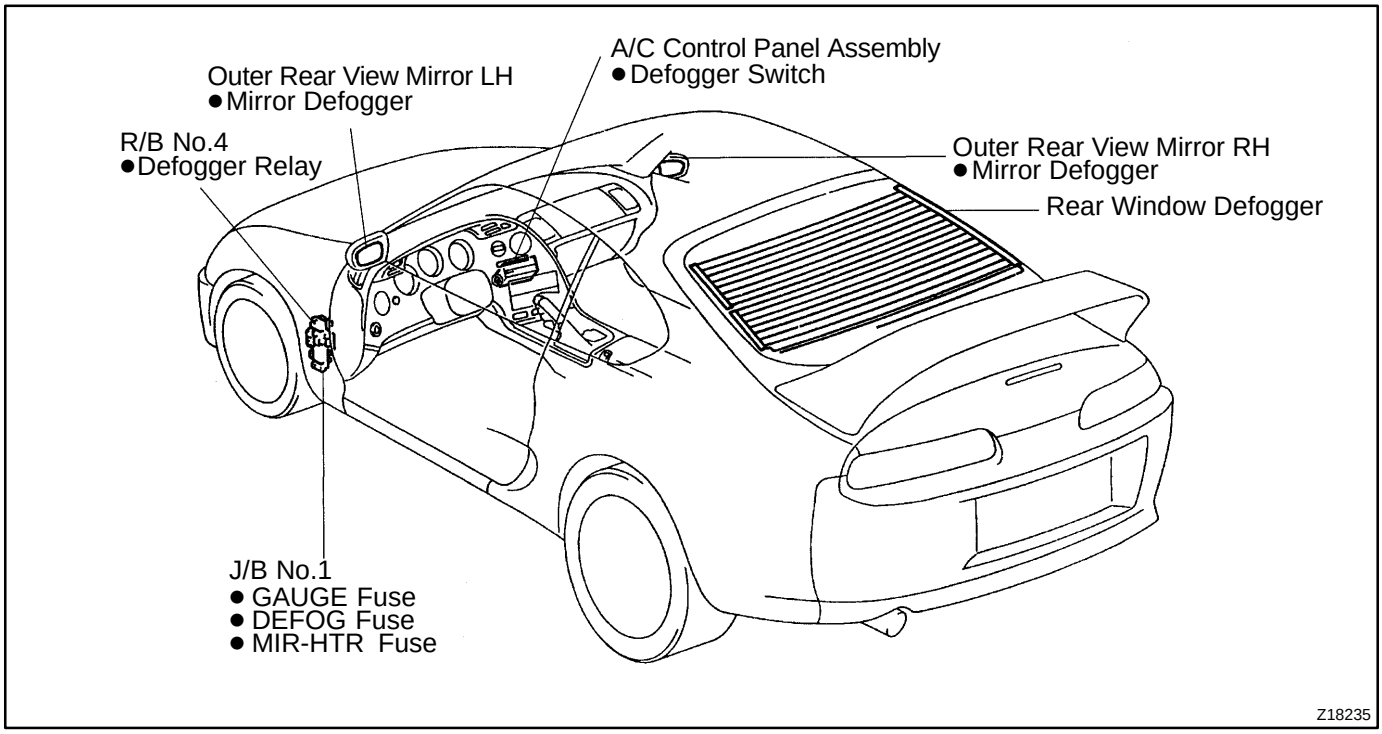

BE0ED-01

INSPECTION

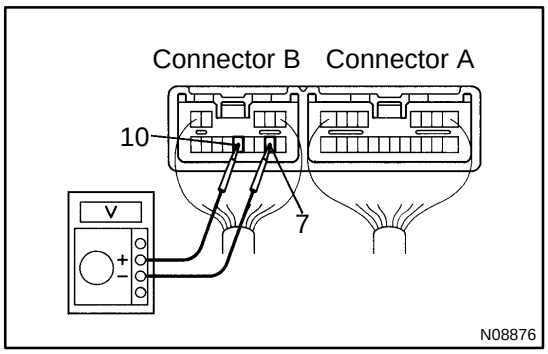

1. INSPECT DEFOGGER SWITCH OPERATION

(a) Connect the positive (+) lead from the voltmeter to terminal 7 of connector B and the negative (-) lead from voltmeter to terminal 10 of connector B.

(b) When the switch is off, the voltage should be approx. 12 V.

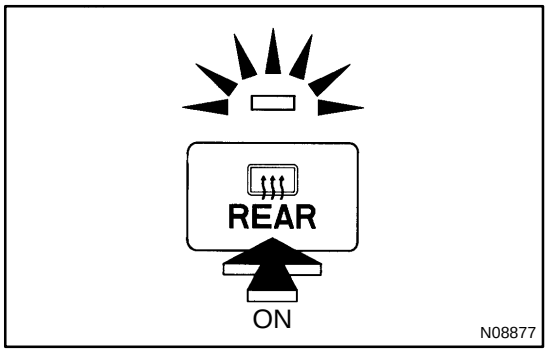

(c) When the switch is on, check that the indicator light lights up and that the voltage is less than 1 V.

(d) After 15 minutes, check that the switch is off and the voltage is approx. 12 V.

2. INSPECT A/C AMPLIFIER

See page DI-71 1

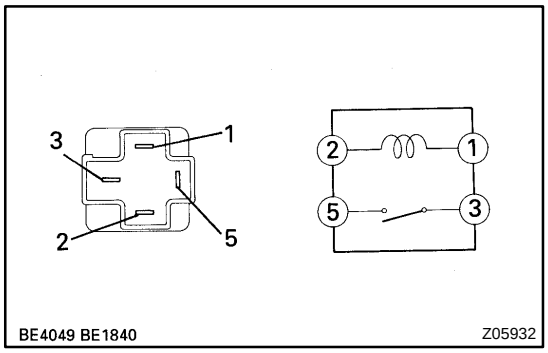

3. INSPECT DEFOGGER RELAY CONTINUITY

Condition	Tester connection	Specified condition
Constant	1 - 2	Continuity
Apply B+ between terminals 1 and 2.	3 - 5	Continuity

If continuity is not as specified, replace the relay.

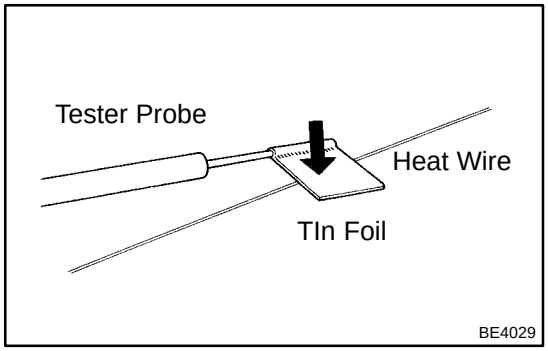

4. INSPECT DEFOGGER WIRE

NOTICE:

- **When cleaning the glass, use a soft, dry cloth, and wipe the glass in the direction of the wire. Take care not to damage the wires.**
- **Do not use detergents or glass cleaners with abrasive ingredients.**
- **When measuring voltage, wind a piece of tin foil around the top of the negative probe and press the foil against the wire with your finger, as shown.**

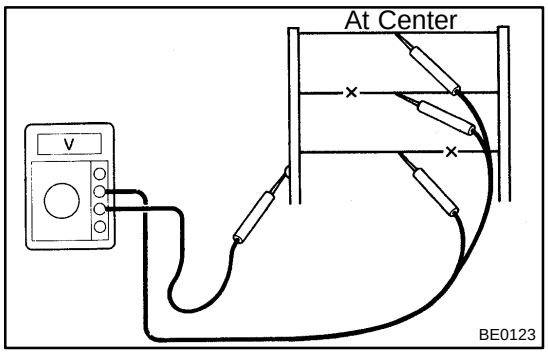

(a) Turn the ignition switch ON.
(b) Turn the defogger switch ON.
(c) Inspect the voltage at the center of each heat wire, as shown.

Voltage	Criteria
Approx. 5V	Okay (No break in wire)
Approx. 10V or 0V	Broken wire

HINT:
If there is approximately 10 V, the wire is broken between the center of the wire and the positive (+) end. If there is no voltage, the wire is broken between the center of the wire and ground.

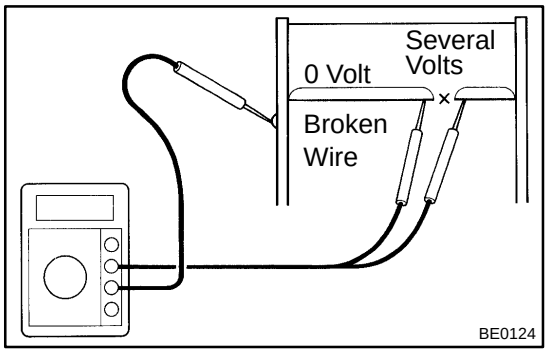

(d) Place the voltmeter positive (+) lead against the defogger positive (+) terminal.
(e) Place the voltmeter negative (-) lead with the foil strip against the heat wire at the positive (+) terminal end and slide it toward the negative (-) terminal end.
(f) The point where the voltmeter deflects from zero to several V is the place where the heat wire is broken.

HINT:
If the heat wire is not broken, the voltmeter indicates 0 V at the positive (+) end of the heat wire but gradually increases to about 12 V as the meter probe is moved to the other end.

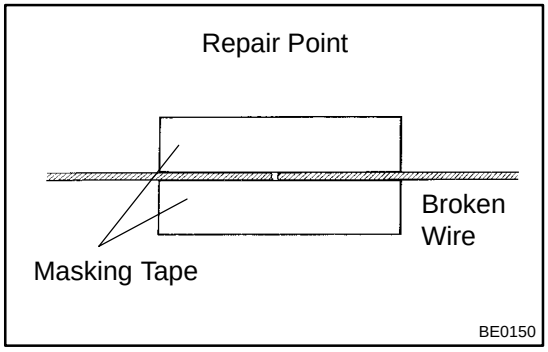

5. IF NECESSARY, REPAIR DEFOGGER WIRE

(a) Clean the broken wire tips with a grease, wax and silicone remover.
(b) Place the masking tape along both sides of the wire to be repaired.
(c) Thoroughly mix the repair agent (DuPont paste No. 4817).

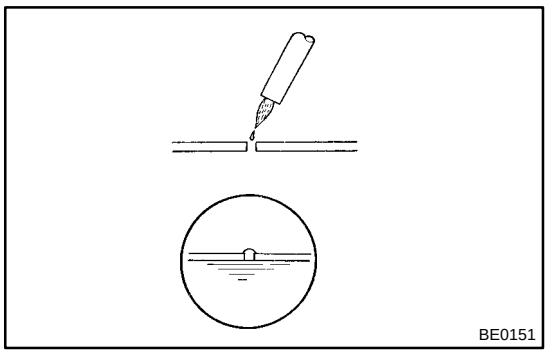

(d) Using a fine tip brush, apply a small amount to the wire.
(e) After a few minutes, remove the masking tape.
(f) Do not repair the defogger wire for at least 24 hours.

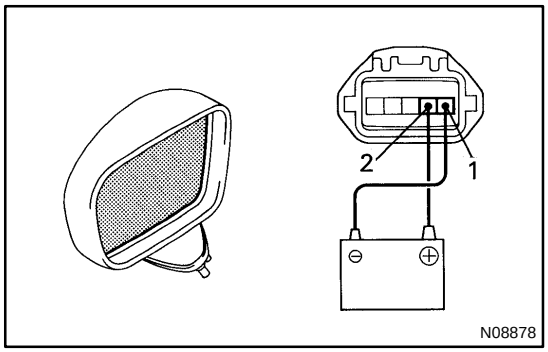

6. INSPECT MIRROR DEFOGGER OPERATION

(a) Connect the positive (+) lead from the battery to terminal 2 and the negative (-) lead to terminal 1.
(b) Check that the mirror becomes warm.

HINT:
It will take a short time for the mirror to become warm.
If the mirror does not become warm, replace the mirror assembly.

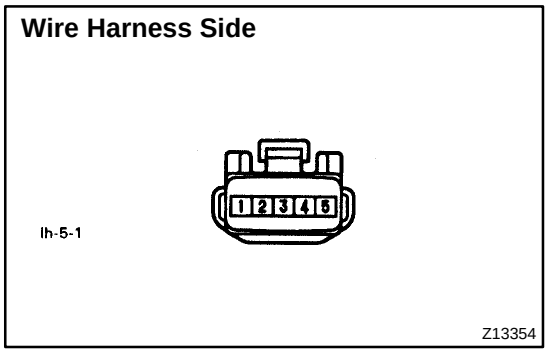

7. INSPECT MIRROR DEFOGGER CIRCUIT

Disconnect the connector from the outside mirror and inspect the connector on the wire harness side, as shown.

Tester connection	Condition	Specified condition
1 - Ground	Constant	Continuity
2 - Ground	Ignition switch ON (Defogger switch OFF)	No voltage
2 - Ground	Ignition switch ON (Defogger switch ON)	Battery positive voltage

If the circuit is not as specified, inspect the circuits connected to other parts.

POWER WINDOW CONTROL SYSTEM

LOCATION

BE0EE-01

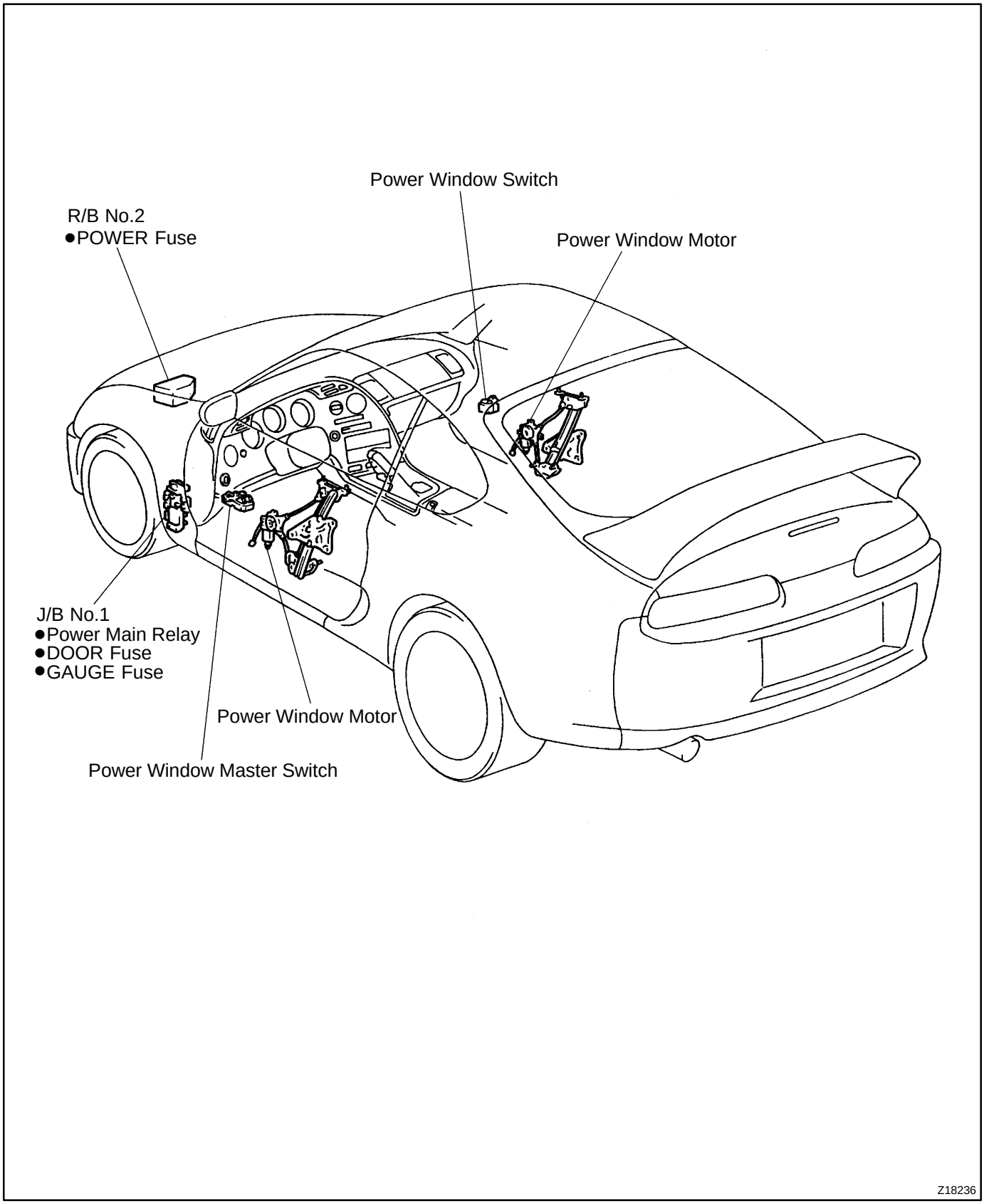

BE0EF-01

INSPECTION

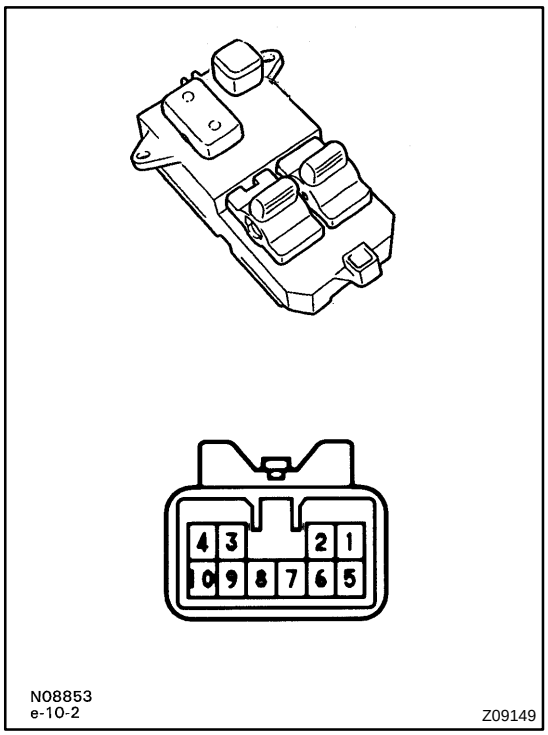

1. INSPECT POWER WINDOW MASTER SWITCH CONTINUITY

Driver's Switch:

Switch position	Tester connection	Specified condition
UP	4 - 10, 8 - 9	Continuity
OFF	8 - 10, 8 - 9	Continuity
DOWN	4 - 9, 8 - 10	Continuity

Passenger's Switch (Window unlock):

Switch position	Tester connection	Specified condition
UP	4 - 5, 7 - 8	Continuity
OFF	5 - 8, 7 - 8	Continuity
DOWN	4 - 7, 5 - 8	Continuity

Passenger's Switch (Window lock):

Switch position	Tester connection	Specified condition
UP	4 - 5	Continuity
OFF	5 - 7	Continuity
DOWN	4 - 7	Continuity

If continuity is not as specified, replace the switch.

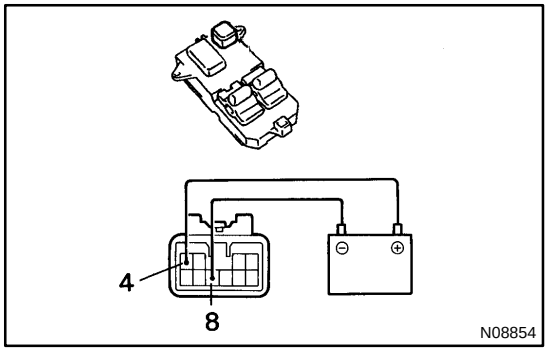

2. INSPECT POWER WINDOW MASTER SWITCH ILLUMINATION

Connect the positive (+) lead from the battery to terminal 4 and the negative (-) lead to terminal 8, check that the illumination lights up.

If operation is not as specified, replace the master switch.

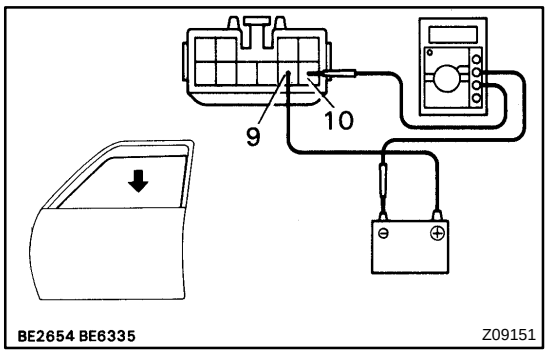

3. Using an ammeter:
INSPECT ONE TOUCH POWER WINDOW SYSTEM/ CURRENT OF CIRCUIT

(a) Disconnect the connector from the master switch.
(b) Connect the positive (+) lead from the ammeter to terminal 9 on the wire harness side connector and the negative (-) lead to negative terminal of the battery.
(c) Connect the positive (+) lead from the battery to terminal 10 on the wire harness side connector.
(d) As the window goes down, check that the current flow is approximately 7 A.

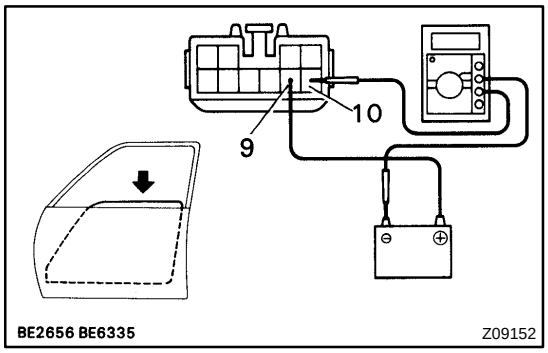

(e) Check that the current increases up to approximately 14.5 A or more when the window stops going down.

HINT:
The circuit breaker opens some 4 - 90 seconds after the window stops going down, so that check must be made before the circuit breaker operates.
If the operation is as specified, replace the master switch.

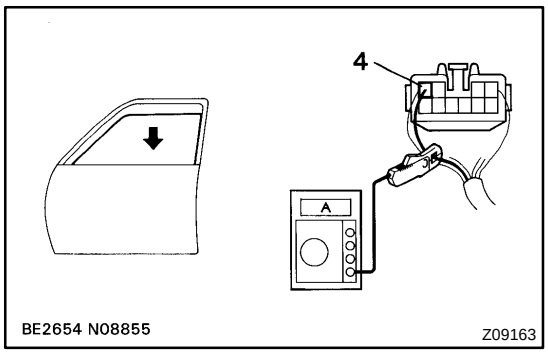

4. Using an ammeter with a current-measuring probe:
INSPECT ONE TOUCH POWER WINDOW SYSTEM CURRENT OF CIRCUIT

(a) Remove the master switch with connector connected.
(b) Attach a current-measuring probe to terminal 4 of the wire harness.
(c) Turn the ignition switch ON and set the power window switch in the down position.
(d) As the window goes down, check that the current flow is approximately 7 A.

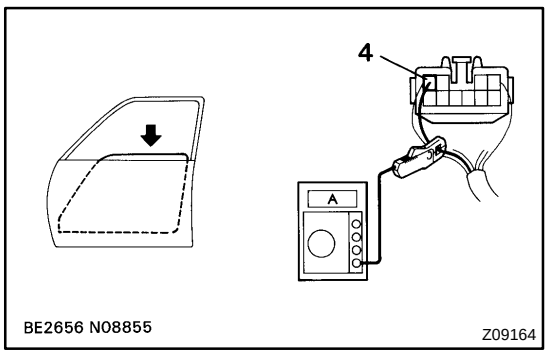

(e) Check that the current increases up to approximately 14.5 A or more when the window stops going down.

HINT:
The circuit breaker opens some 9 - 90 seconds after the window stops going down, so that check must be made before the circuit breaker operates.
If operation is as specified, replace the master switch.

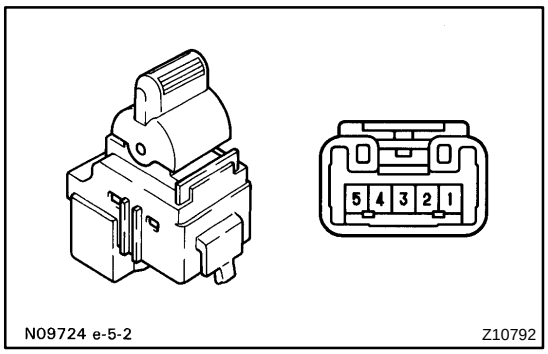

5. INSPECT POWER WINDOW SWITCH CONTINUITY

Switch position	Tester connection	Specified condition
UP	1 - 4, 3 - 5	Continuity
OFF	1 - 2, 3 - 5	Continuity
DOWN	1 - 2, 3 - 4	Continuity

If continuity is not as specified, replace the switch.

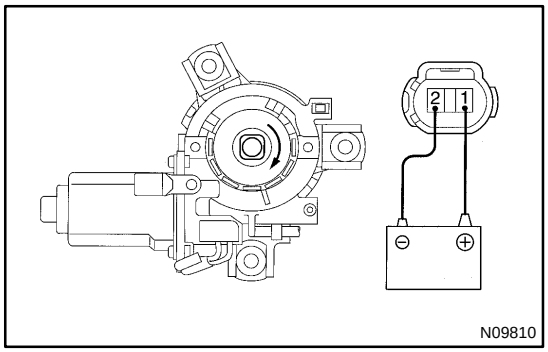

6. Driver's Door: INSPECT POWER WINDOW MOTOR OPERATION

(a) Connect the positive (+) lead from the battery to terminal 1 and the negative (-) lead to terminal 2, and check that the motor turns clockwise.

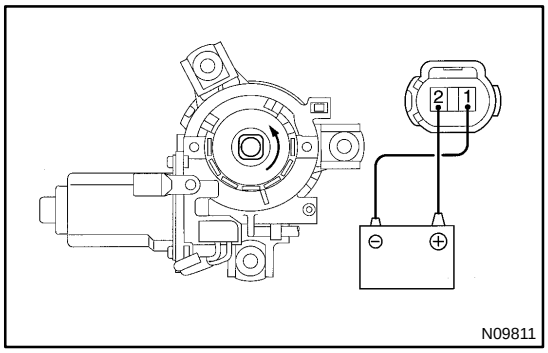

(b) Reverse the polarity, and check that the motor turns counterclockwise.

If operation is not as specified, replace the motor.

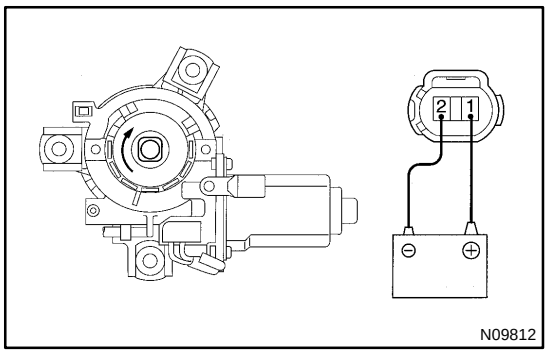

7. Passenger's Door: INSPECT POWER WINDOW MOTOR OPERATION

(a) Connect the positive (+) lead from the battery to terminal 1 and the negative (-) lead to terminal 2, and check that the motor turns clockwise.

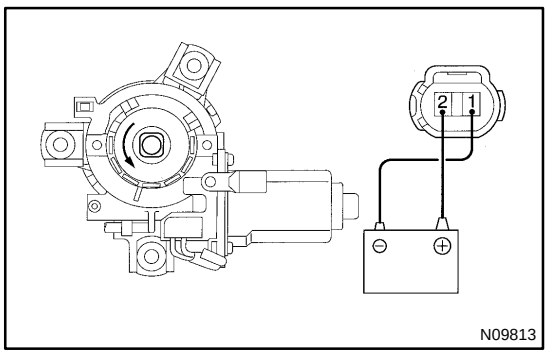

(b) Reverse the polarity, and check that the motor turns counterclockwise.

If operation is not as specified, replace the motor.

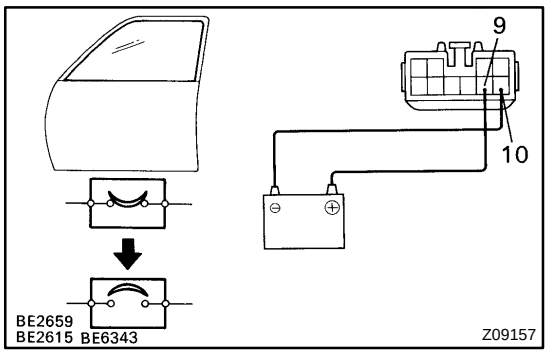

8. Driver's Door:
INSPECT PTC OPERATION

(a) Disconnect the connector from the master switch.
(b) Connect the positive (+) lead from the battery to terminal 9 and the negative (-) lead to terminal 10 on the wire harness side connector and raise the window to the fully closed position.
(c) Continue to apply voltage, and check that there is a PTC operation noise within approximately 4 to 90 seconds.

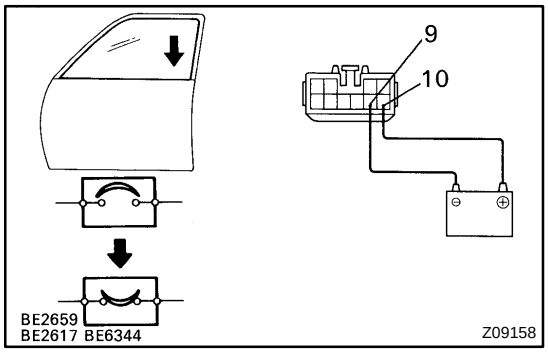

(d) Reverse the polarity, and check that the window begins to descend within approximately 60 seconds.

If operation is not as specified, replace the motor.

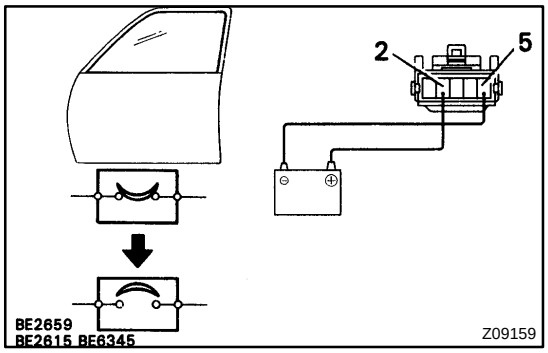

9. Passenger's Door:
INSPECT PTC OPERATION

(a) Disconnect the connector from the power window switch.
(b) Connect the positive (+) lead from the battery to terminal 2 and the negative (-) lead to terminal 5 on the wire harness side connector, and raise the window to the fully closed position.
(c) Continue to apply voltage, and check that there is a PTC operation noise within approximately 4 to 90 seconds.

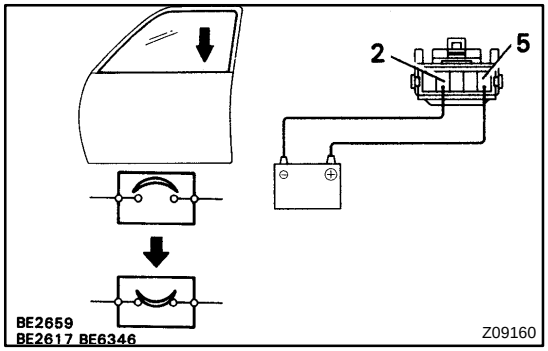

(d) Reverse the polarity, and check that the window begins to descend within approximately 60 seconds.

If operation is not as specified, replace the motor.

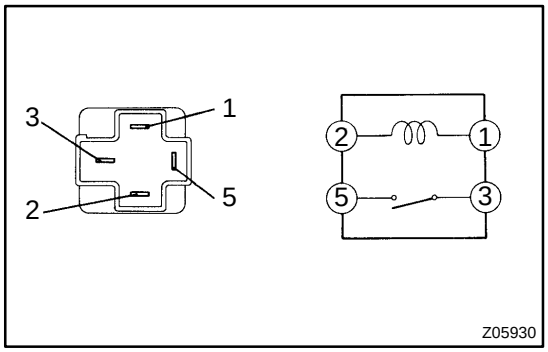

10. INSPECT POWER MAIN RELAY CONTINUITY

Condition	Tester connection	Specified condition
Constant	1 - 2	Continuity
Apply B+ between terminals 1 and 2.	3 - 5	Continuity

If continuity is not as specified, replace the relay.

POWER SEAT CONTROL SYSTEM

LOCATION

BE0EG-01

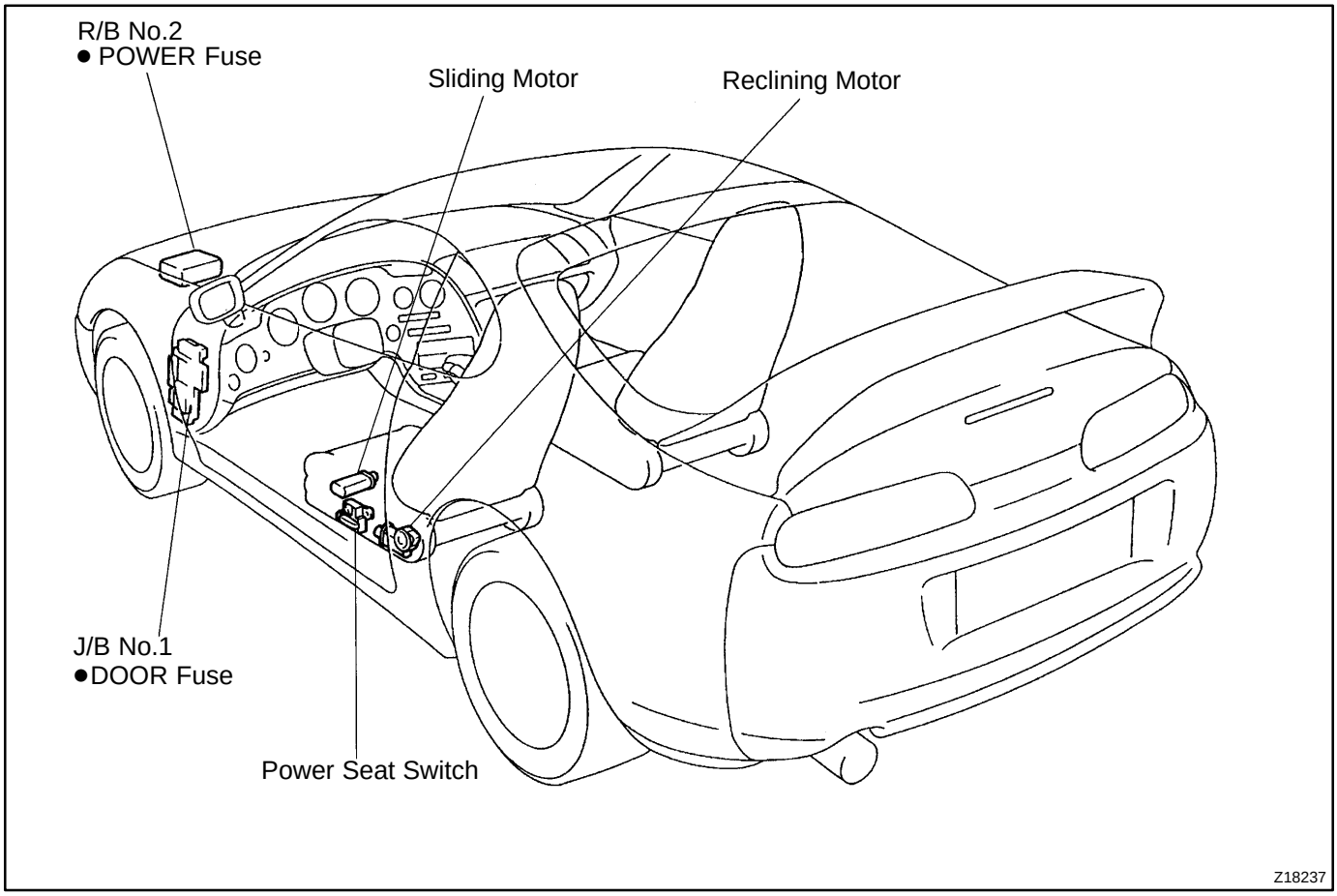

BE0EH-01

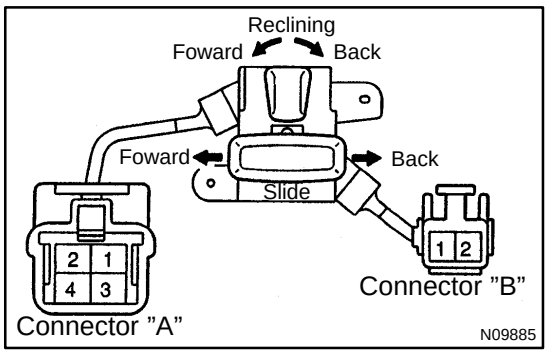

INSPECTION

1. INSPECT POWER SEAT SWITCH CONTINUITY

Slide:

Switch position	Tester connection	Specified condition
Forward	A1-A3, A2-A4	Continuity
Off	A1-A3, A1-A4	Continuity
Back	A1-A4, A2-A3	Continuity

Reclining:

Switch position	Tester connection	Specified condition
Forward	A1-B1, A2-B2	Continuity
Off	A1-B1, A1-B2	Continuity
Back	A1-B2, A2-B1	Continuity

If continuity is not as specified, replace the switch.

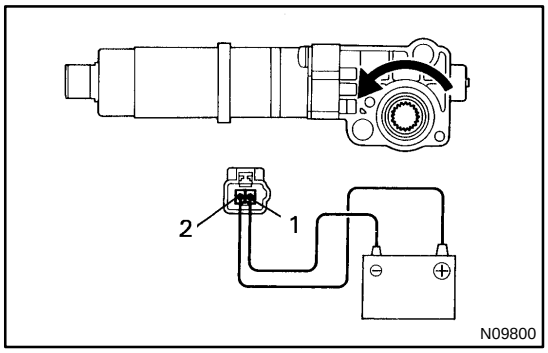

2. INSPECT SLIDE MOTOR OPERATION

(a) Connect the positive (+) lead from the battery to terminal 2 and the negative (-) lead to terminal 1, and check that the motor turns counterclockwise.

(b) Reverse the polarity, and check that the motor turns clockwise.

If operation is not as specified, replace the motor.

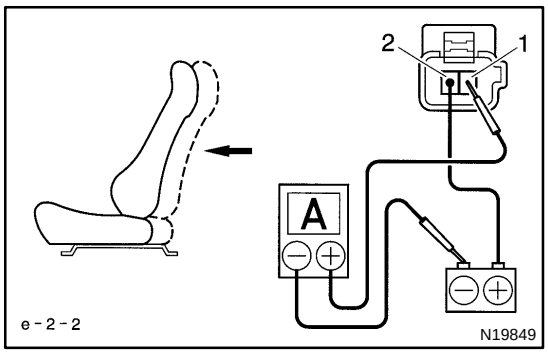

3. INSPECT PTC THERMISTOR OPERATION

(a) Separate power seat adjuster from front seat.

(b) Connect the positive (+) lead from the battery to terminal 2, the positive (+) lead from the ammeter to terminal 1, and the negative (-) lead to battery negative (-) terminal, and move the seat front end position.

(c) Continue to apply voltage, and check the current changes to less than 1 A within 4 to 90 seconds.

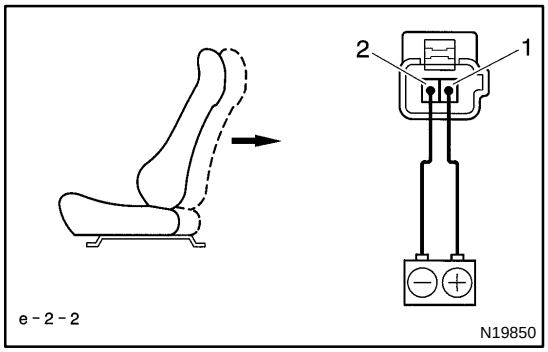

(d) Disconnect the lead from terminals.

(e) Approximately 60 seconds later , connect the positive (+) lead from battery to terminal 1 and the negative (-) lead to terminal 2, and check that the seat begins to move backwards.

If operation is not as specified, replace the motor.

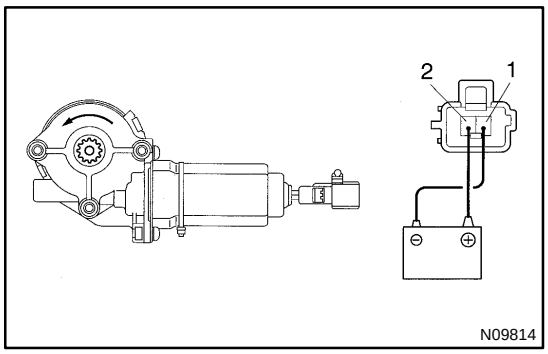

4. INSPECT RECLINING MOTOR OPERATION

(a) Connect the positive (+) lead from the battery to terminal 2 and negative (-) lead to terminal 1, and check that the motor turns counterclockwise.

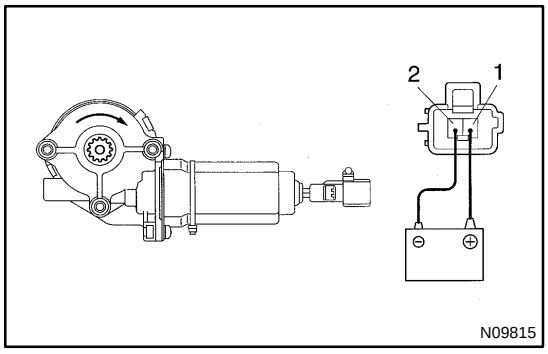

(b) Reverse the polarity, and check that the motor turns clockwise.

If operation is not as specified, replace the motor.

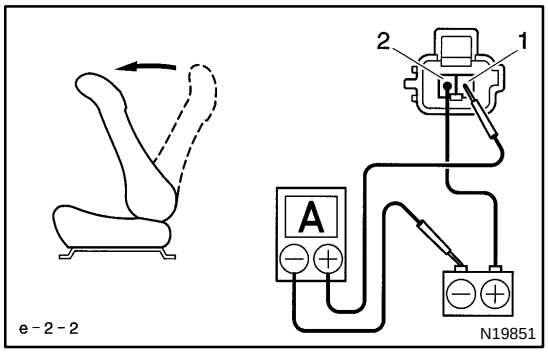

5. INSPECT PTC THERMISTOR OPERATION

(a) Connect the positive (+) lead from the battery to terminal 2.

(b) Connect the positive (+) lead from the ammeter to terminal 1 and the negative (-) lead to battery negative (-) terminal.

(c) Check that the seat back is reclined to the most forward position.

(d) Continue to apply voltage, and check the current change to less than 1 A within 4 to 90 seconds.

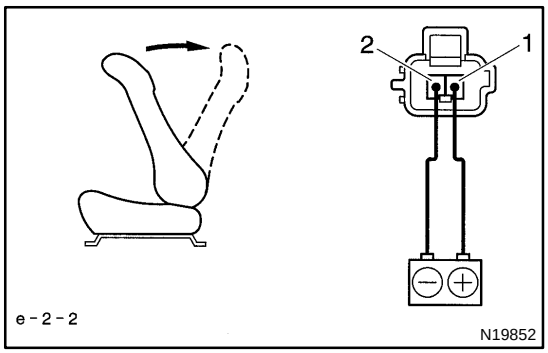

(e) Disconnect the lead from terminals.

(f) Approximately 60 seconds later, connect the positive (+) lead from the battery to terminal 1 and the negative (-) lead to terminal 2, and check that the seat back starts to fall backwards.

If operation is not as specified, replace the motor.

POWER MIRROR CONTROL SYSTEM

LOCATION

BE0EI-01

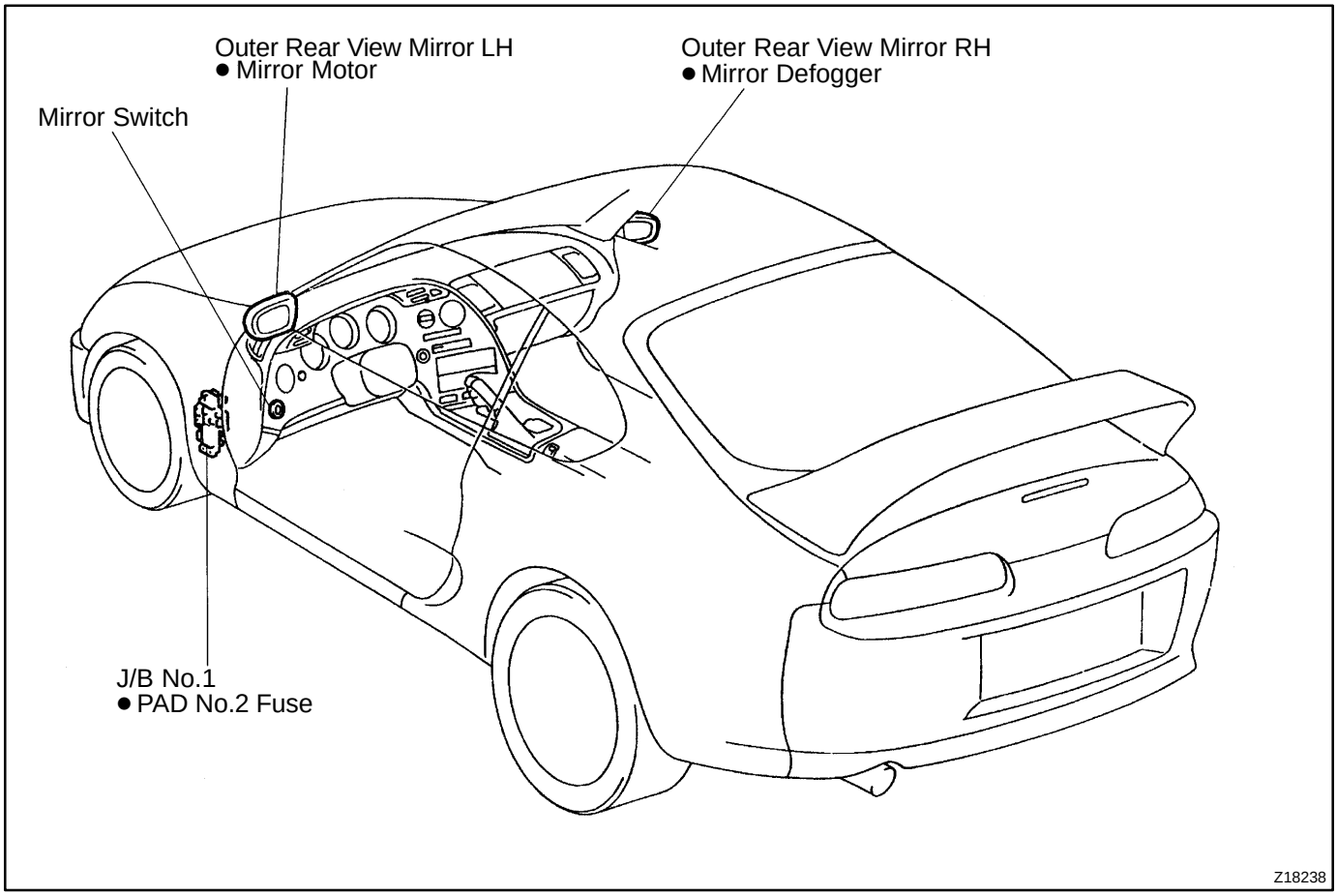

BE0EJ-01

INSPECTION

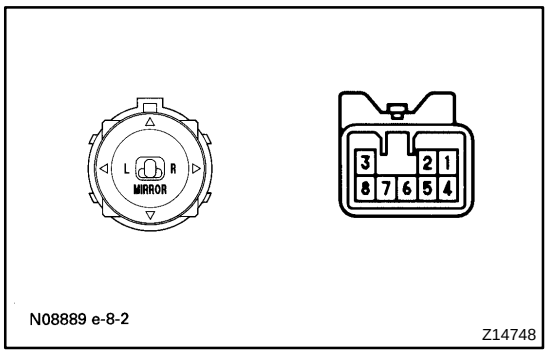

1. INSPECT MIRROR SWITCH CONTINUITY

Left Side

Switch position	Tester connection	Specified condition
OFF	-	No continuity
UP	2 - 5, 6 - 8	Continuity
DOWN	2 - 6, 5 - 8	Continuity
LEFT	1 - 8, 2 - 5	Continuity
RIGHT	1 - 2, 5 - 8	Continuity

Right Side

Switch position	Tester connection	Specified condition
OFF	-	No continuity
UP	2 - 5, 3 - 8	Continuity
DOWN	2 - 3, 5 - 8	Continuity
LEFT	2 - 5, 7 - 8	Continuity
RIGHT	2 - 7, 5 - 8	Continuity

If continuity is not as specified, replace the switch.

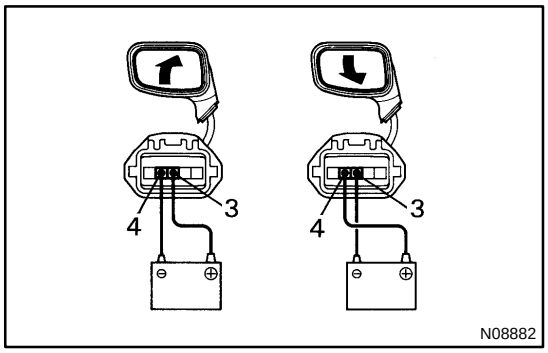

2. INSPECT MIRROR MOTOR OPERATION

(a) Connect the positive (+) lead from the battery to terminal 3 and negative (-) lead to terminal 4, and check that the mirror turns upward.

(b) Reverse the polarity, and check that the mirror turns to downward.

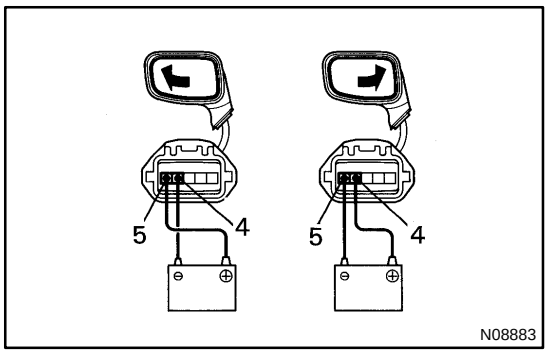

(c) Connect the positive (+) lead from the battery to terminal 5 and negative (-) lead to terminal 4, and check that the mirror turns to left side.

(d) Reverse the polarity, and check that the mirror turns to right side.

If operation is not as specified, replace the mirror.

SEAT HEATER SYSTEM

LOCATION

BE0EK-01

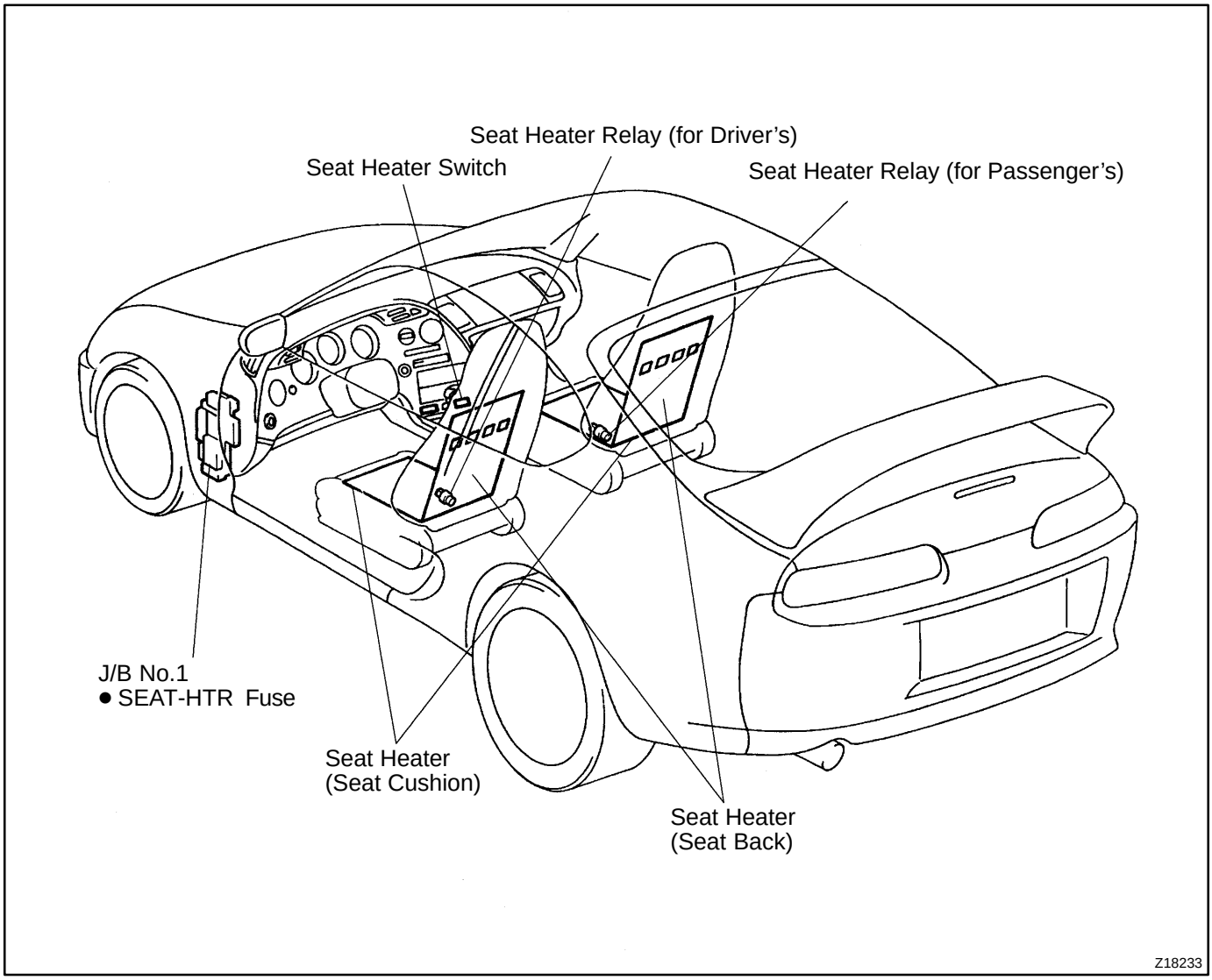

BE0EL-01

INSPECTION

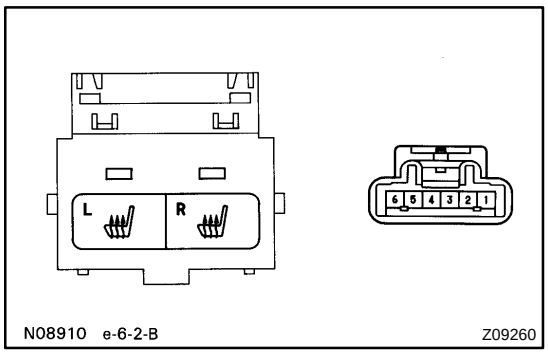

1. INSPECT SEAT HEATER SWITCH CONTINUITY

Condition	Tester connection	Specified condition
SW ON (LEFT)	2 - 4	Continuity
SW ON (RIGHT)	4 - 6	Continuity
SW OFF	-	No continuity
Illumination circuit	3 - 5	Continuity

If continuity is not as specified, replace the switch or bulb.

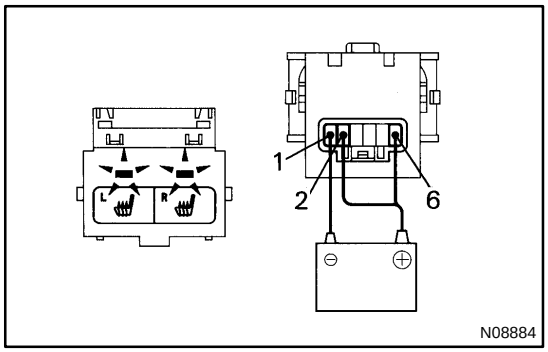

2. INSPECT SEAT HEATER SWITCH INDICATOR

(a) Connect the positive (+) lead from the battery to terminal 2 and 6 and the negative (-) lead to terminal 1.

(b) Push the switches, check that the indicator lights up.

If operation is not as specified, replace the switch and inspect the circuits connected to other parts.

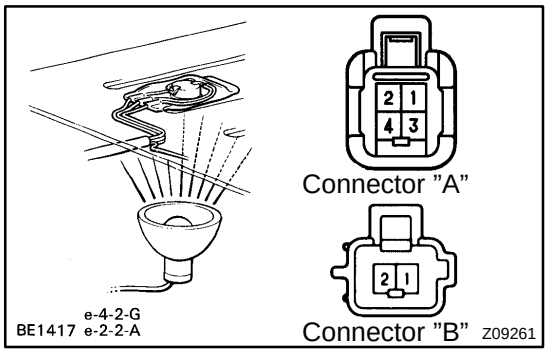

3. INSPECT SEAT CUSHION CONTINUITY

(a) Heat the thermostat with a light.

(b) Inspect the seat heater continuity between terminals.

Tester connection	Condition	Specified condition
A1 - A2	Constant	Continuity
A1 - B2	Constant	Continuity
A2 - B2	Constant	Continuity
A3 - A4	Seat heater temperature below 25˚C (77˚F)	Continuity
A4 - B1	Seat heater temperature below 25˚C (77˚F)	Continuity
A3 - A4	Seat heater temperature above 45˚C (113˚F)	No Continuity
A4 - B1	Seat heater temperature above 45˚C (113˚F)	No Continuity

If continuity is not as specified, replace the seat cushion pad.

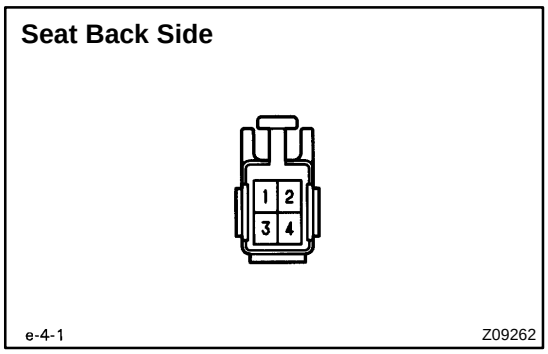

4. INSPECT SEAT BACK CONTINUITY

Inspect the seat heater continuity between terminals, as shown.

Tester connection	Condition	Specified condition
1 - 3	Constant	Continuity
2 - 4	Constant	Continuity

If continuity is not as specified, replace the seat back pad.

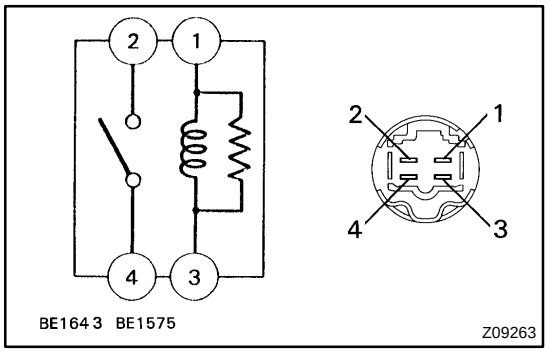

5. INSPECT SEAT HEATER RELAY CONTINUITY

Condition	Tester connection	Specified condition
Constant	1 - 3	Continuity
Apply B+ between terminals 1 and 3.	2 - 4	Continuity

If continuity is not as specified, replace the relay.

AUDIO SYSTEM

BE0EM-01

DESCRIPTION

1. RADIO WAVE BAND

The radio wave bands used in radio broadcasting are as follows:

Frequency	30 kHz	300 kHz	3 MHz	30 MHz	300 MHz
Designation	LF	MF	HF	VHF	
Radio wave		AM		FM	
Modulation method	Amplitude modulation			Frequency modulation	

LF: Low frequency MF: Medium Frequency HF: High Frequency VHF: Very High Frequency

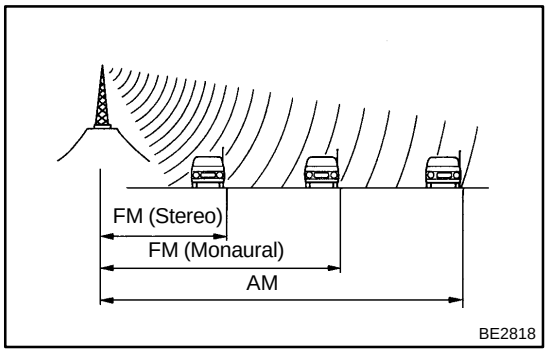

2. SERVICE AREA

There are great differences in the size of the service area for AM and FM monaural. Sometimes FM stereo broadcasts cannot be received even through AM can be received in very clearly.
Not only does FM stereo have the smallest service area, but it also picks up static and other types of interference (”noise”) easily.

3. RECEPTION PROBLEMS

Besides the problem of static, there are also the problems called ”fading”, ”multipath” and ”fade out”. These problems are caused not by electrical noise but by the nature of the radio waves themselves.

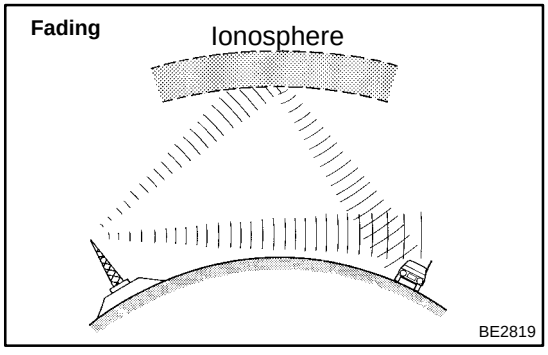

(a) Fading

Besides electrical interference, AM broadcasts are also susceptible to other types of interference, especially at night. This is because AM radio waves bounce off the ionosphere at night. These radio waves then interfere with the signals from the same transmitter that reach the vehicle’s antenna directly. This type of interference is called ”fading”.

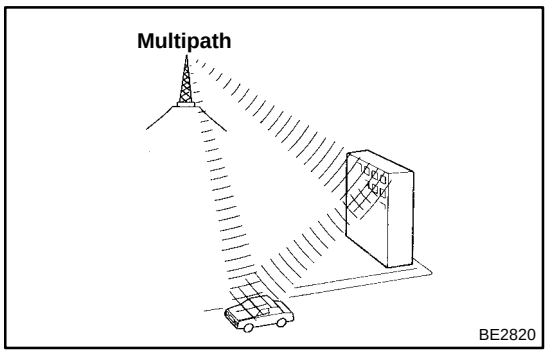

(b) Multipath
One type of interference caused by the bounce of radio waves off of obstructions is called ”multipath”. Multipath occurs when a signal from the broadcast transmitter antenna bounces off buildings and mountains and interferes with the signal that is received directly.

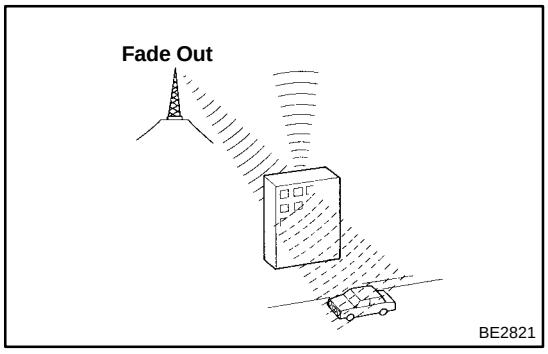

(c) Fade Out
Because FM radio waves are of higher frequencies than AM radio waves, they bounce off buildings, mountains, and other obstructions. For this reason, FM signals often seem to gradually disappear or fade away as the vehicle goes behind a building or other obstruction. This is called ”fade out”.

4. COMPACT DISC PLAYER

Compact Disc (hereafter called ”CD”) Players use a laser beam pick-up to read the digital signals recorded on the CD and reproduce analog signals of the music, etc. There are 4.7 in. (12 cm) and 3.2 in. (8 cm) discs in the CD player.
HINT:
Never attempt to disassemble or oil any part of the player unit.
Do not insert any object other than a disc into the magazine.
NOTICE:
CD players use an invisible laser beam which could cause hazardous radiation exposure. Be sure to operate the player correctly as instructed.

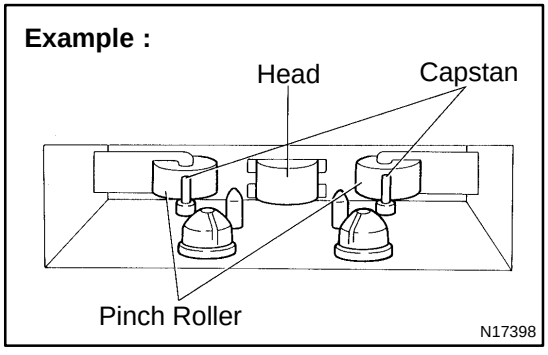

5. Tape Player/Head Cleaning: MAINTENANCE

(a) Raise the cassette door with your finger.
Next, using a pencil or similar object, push in the guide.
(b) Using a cleaning pen or cotton applicator soaked in cleaner, clean the head surface, pinch rollers and capstans.

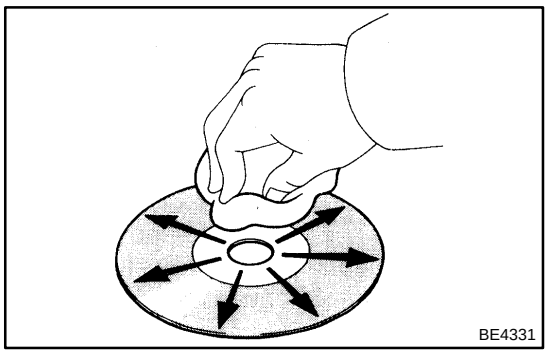
BE4331

6. CD Player/Disc Cleaning: MAINTENANCE

If the disc gets dirty, clean the disc by wiping the surface from the center to outside in the radial directions with a soft cloth.

NOTICE:

Do not use a conventional record cleaner or anti-static preservative.

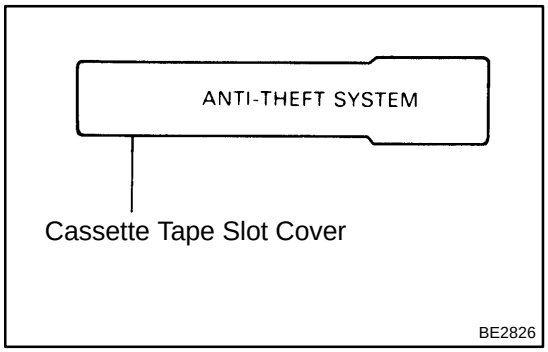

BE2826

7. ANTI-THEFT SYSTEM

HINT:

The words ”ANTI-THEFT SYSTEM” are displayed on the cassette tape slot cover.

For operation instructions for the anti-theft system, please consult the audio system section in the Owner’s Manual (hereafter called O/M).

(a) Setting system

The system is in operation once the customer has pushed the required buttons and entered the customer-selected 3-digit ID number.

(Refer to the O/M section, ”Setting the anti-theft system”)

HINT:

- When the audio system is shipped, the ID number has not been input, so the anti-theft system is not in operation.
- If the ID number has not been input, the audio system remains the same as a normal audio system.

(b) Anti-theft system operation

If the normal electrical power source (Connector or battery terminal) is cut off, the audio system becomes inoperable, even if the power supply resumes.

(c) Canceling system

The ID number chosen by the customer is input to cancel the anti-theft system

(Refer to the O/M section, ”If the system is activated”)

HINT:

To change or cancel the ID number, please refer to the O/M ”Cancelling the system”.

BE0EN-01

TROUBLESHOOTING

NOTICE:

When replacing the internal mechanism (computer part) of the audio system, be careful that no part of your body or clothing comes in contact with the terminals of the leads from the IC, etc. of the replacement part (spare part).

HINT:

This inspection procedure is a simple troubleshooting which should be carried out on the vehicle during system operation and was prepared on the assumption of system component troubles (except for the wires and connectors, etc.).

Always inspect the trouble taking the following items into consideration.

Open or short circuit of the wire harness

Connector or terminal connection fault

For audio systems with anti-theft system, troubleshooting items marked (*) indicate that "Troubleshooting for ANTI-THEFT SYSTEM" should be carried out first.

	Problem	No.
Radio	Radio not operating when power switch turned to 'ON'.	1
	Display indicates when power switch turned to 'ON', but no sound (including 'noise') is produced.	2
	Noise present, but AM - FM not operating.	3
	Any speaker does not work.	4
	Any AM or FM does not work.	5
	Few preset turning bands.	5
	Reception poor.	6
	Sound quality poor.	7
	Preset memory disappears.	8
Tape Player	Cassette tape cannot be inserted.	9
	Cassette tape inserts, but no power.	10
	Power coming in, but tape player not operating.	11
	Any speaker does not work.	12
	Sound quality poor.	13
	Tape jammed, malfunction with tape speed or auto-reverse.	14
	Cassette tape will not eject.	15
CD Player	CD cannot be inserted.	16
	CD inserted, but no power.	17
	Power coming in, but CD player not operating.	18
	Sound jumps.	19
	Sound quality poor (Volume faint).	20
	Any speaker does not work.	21
	CD will not be ejected.	22
Power Amplifier	No power coming in.	23
	Power coming in, but power amplifier not operating.	24
	Any speaker does not work.	25
Antenna	Antenna does not fully extend or fully retract.	26
	Antenna - related.	27
Noise	Noise produced by vibration or shock while driving.	28
	Noise produced when engine starts.	29

The term "AM" includes LW,MW and SW, and the term "FW" includes UKW.

Troubleshooting for ANTI-THEFT SYSTEM

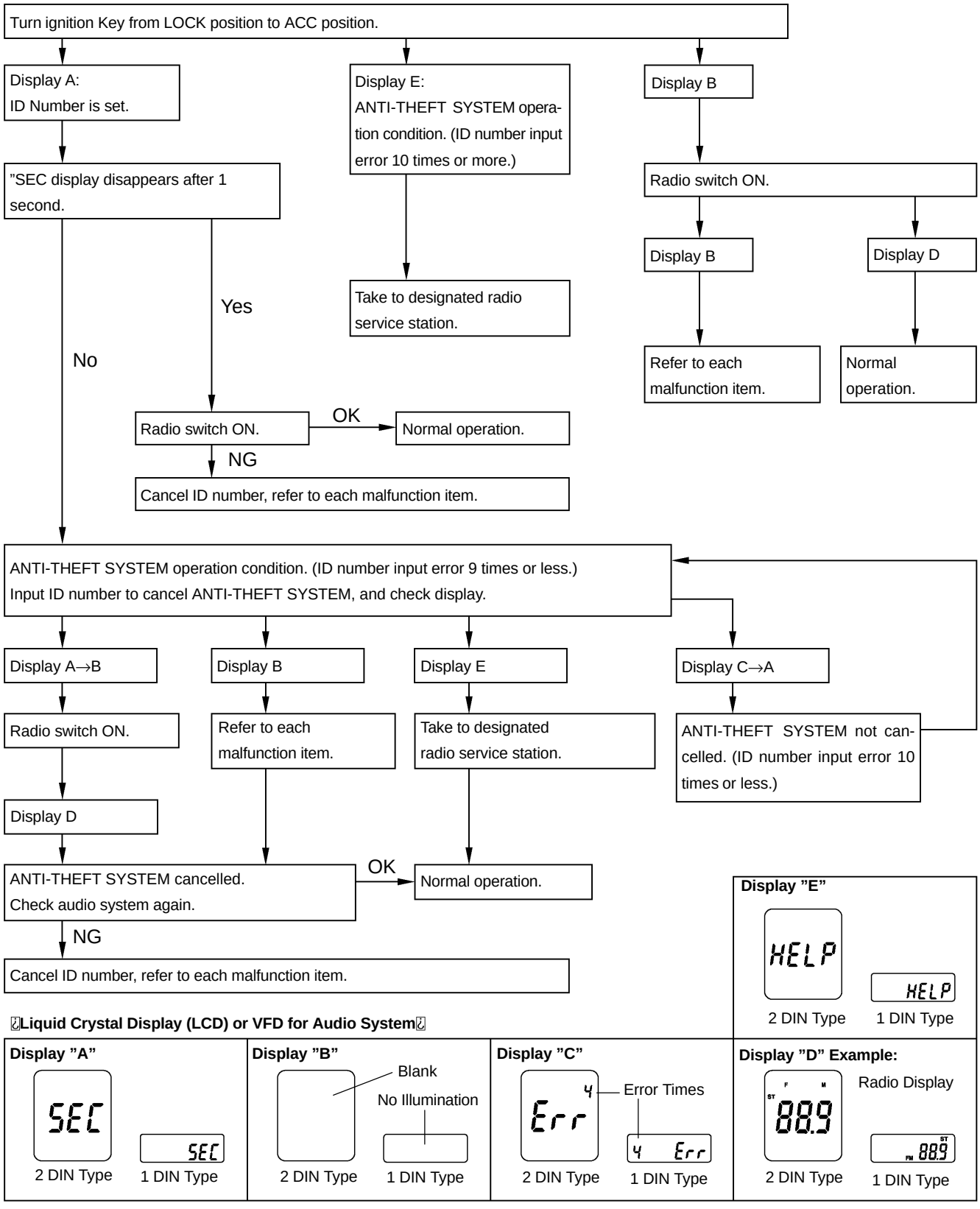

HINT:

- Refer to Owner's Manual for operation details of ANTI-THEFT SYSTEM.
- When the ID number has been cancelled, reset the same number after completing the operation, or inform the customer that it has been cancelled.

V08418

1	Radio	RADIO NOT OPERATING WHEN POWER SWITCH TURNED TO "ON"

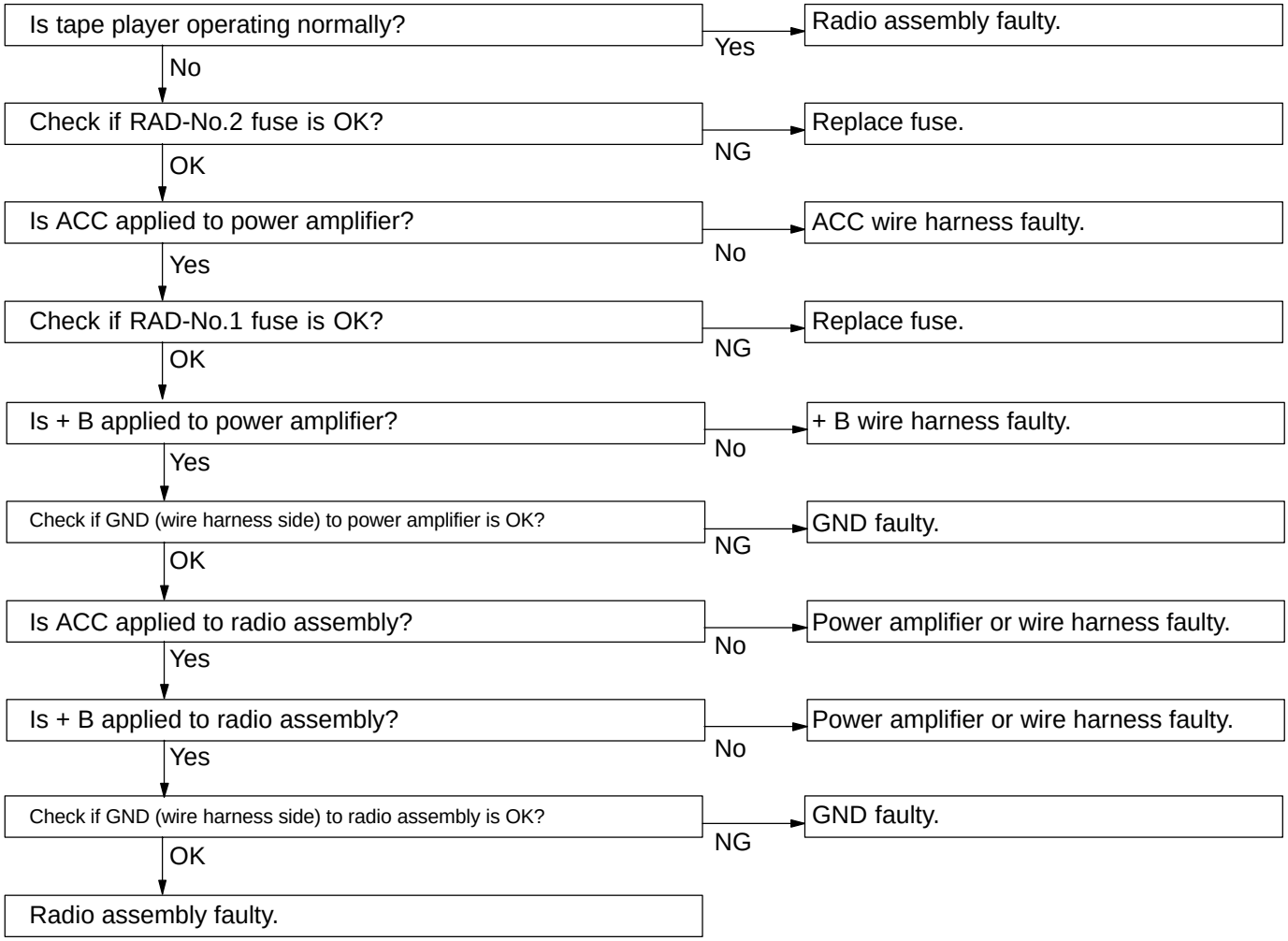

2	Radio	DISPLAY INDICATES WHEN POWER SWITCH TURNED TO "ON", BUT NO SOUND (INCLUDING "NOISE") IS PRODUCED

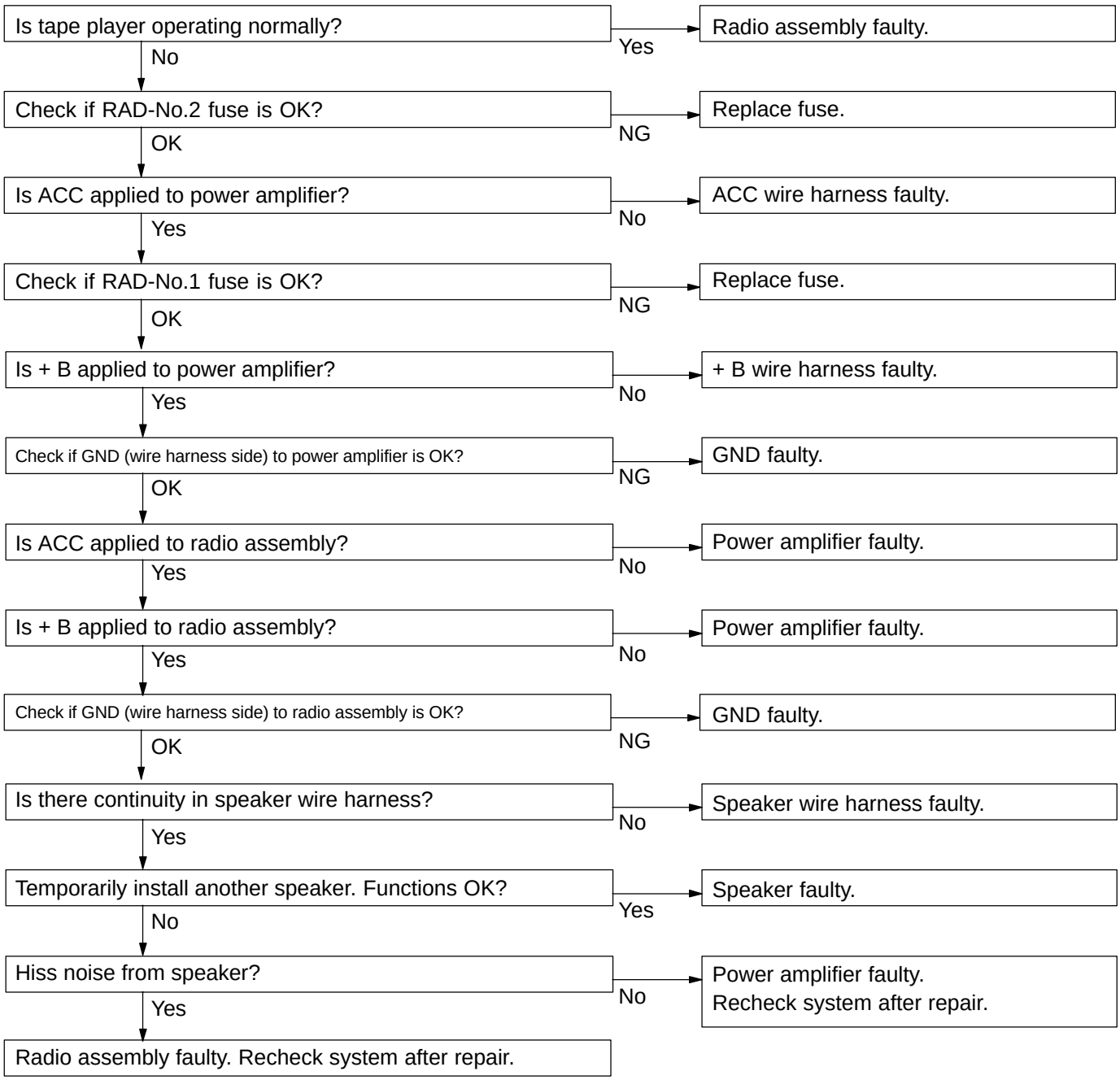

3	Radio	NOISE PRESENT, BUT AM-FM NOT OPERATING

Go to No.25

If radio side faulty. → Radio faulty.

4	Radio	ANY SPEAKER DOSE NOT WORK

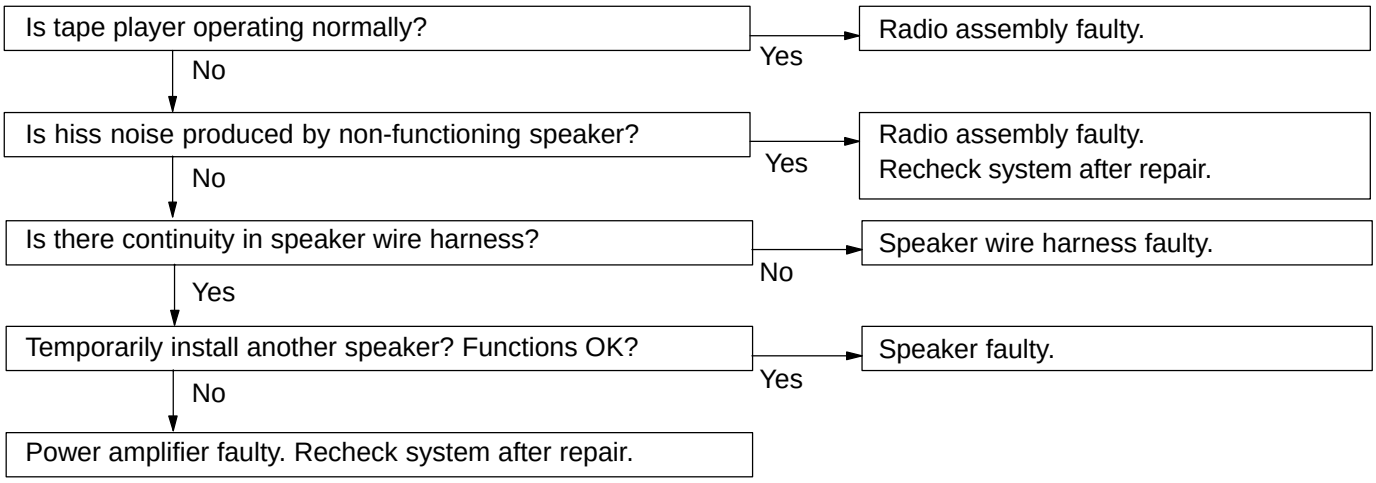

5	Radio	ANY AM OR FM DOES NOR WORK FEW PRESET TUNING BANDS

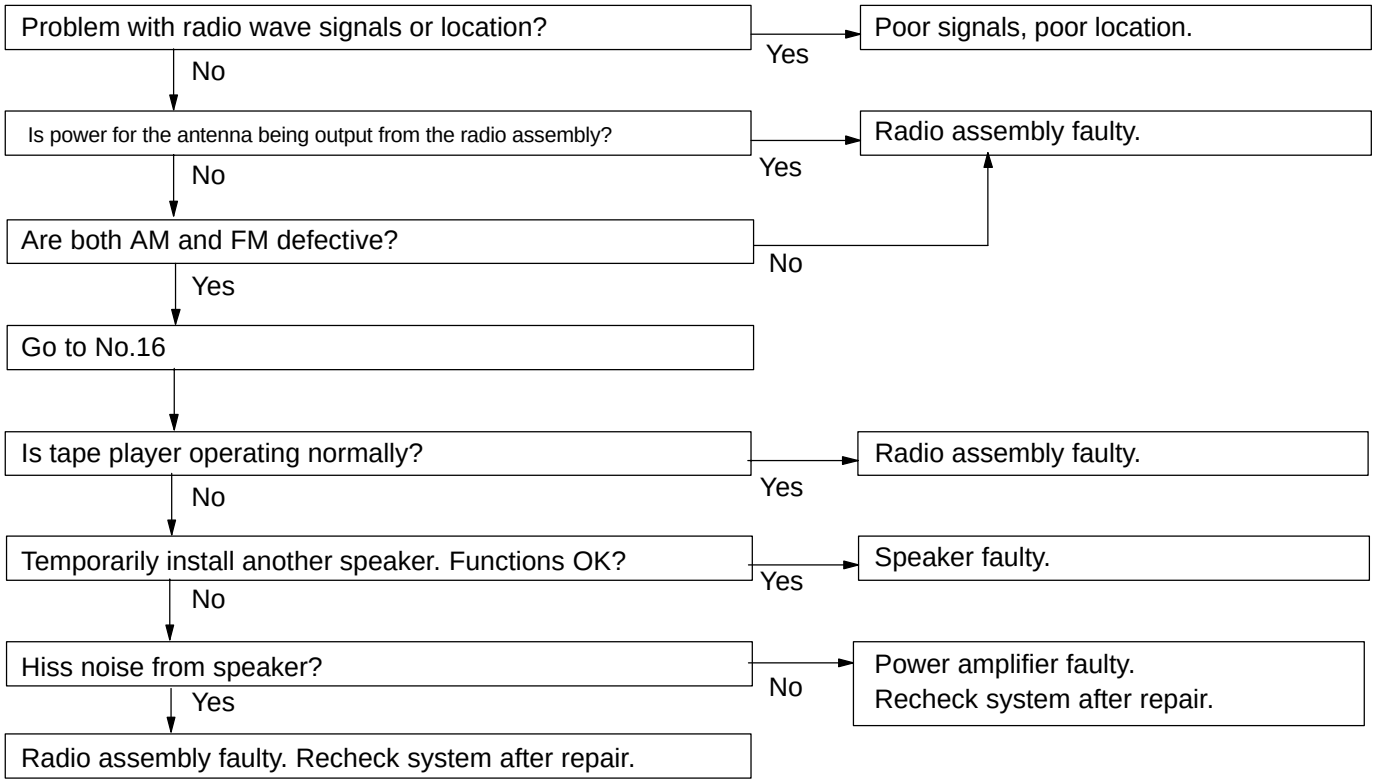

6	Radio	POOR RECEPTION

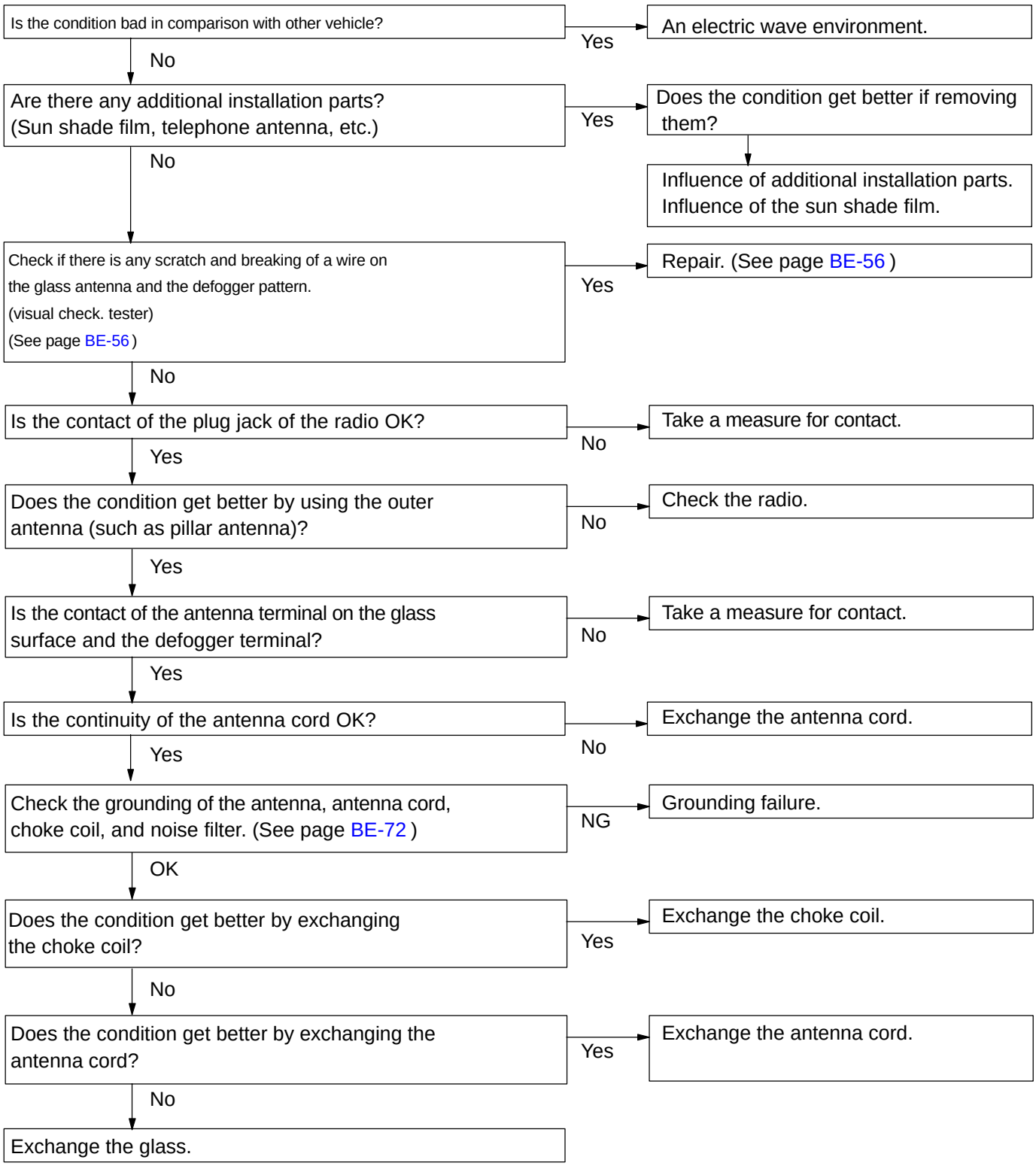

7	Radio	SOUND QUALITY POOR

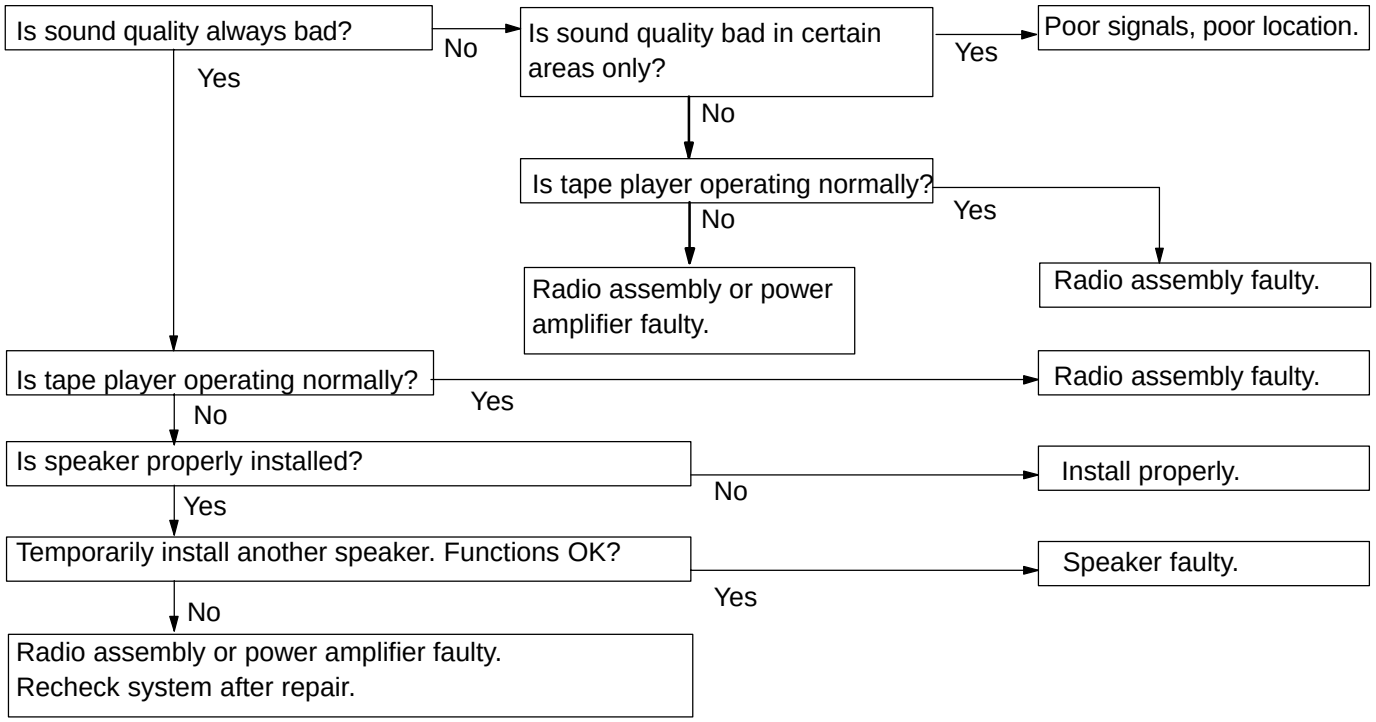

8	Radio	PRESET MEMORY DISAPPEARS

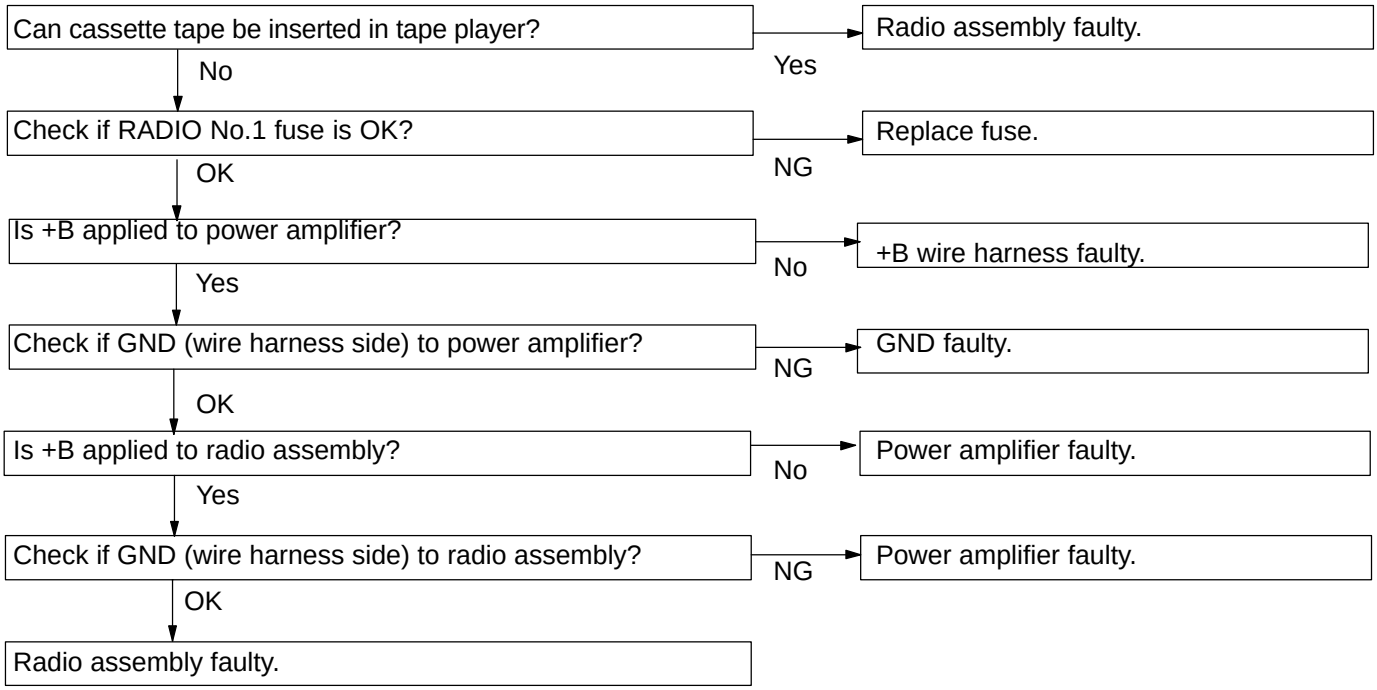

9	Tape Player	CASSETTE TAPE CANNOT BE INSERTED

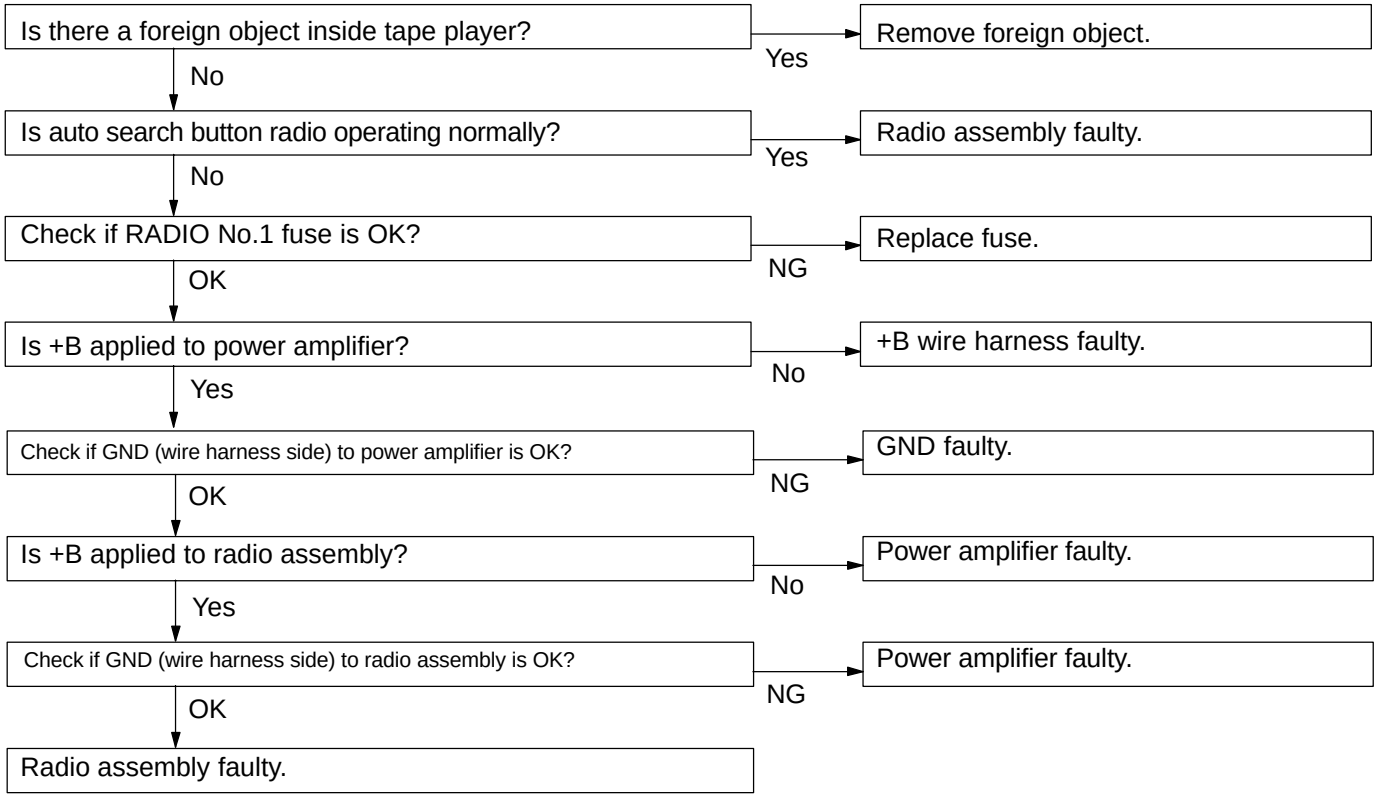

10	Tape Player	CASSETTE TAPE INSERTED, BUT NO POWER

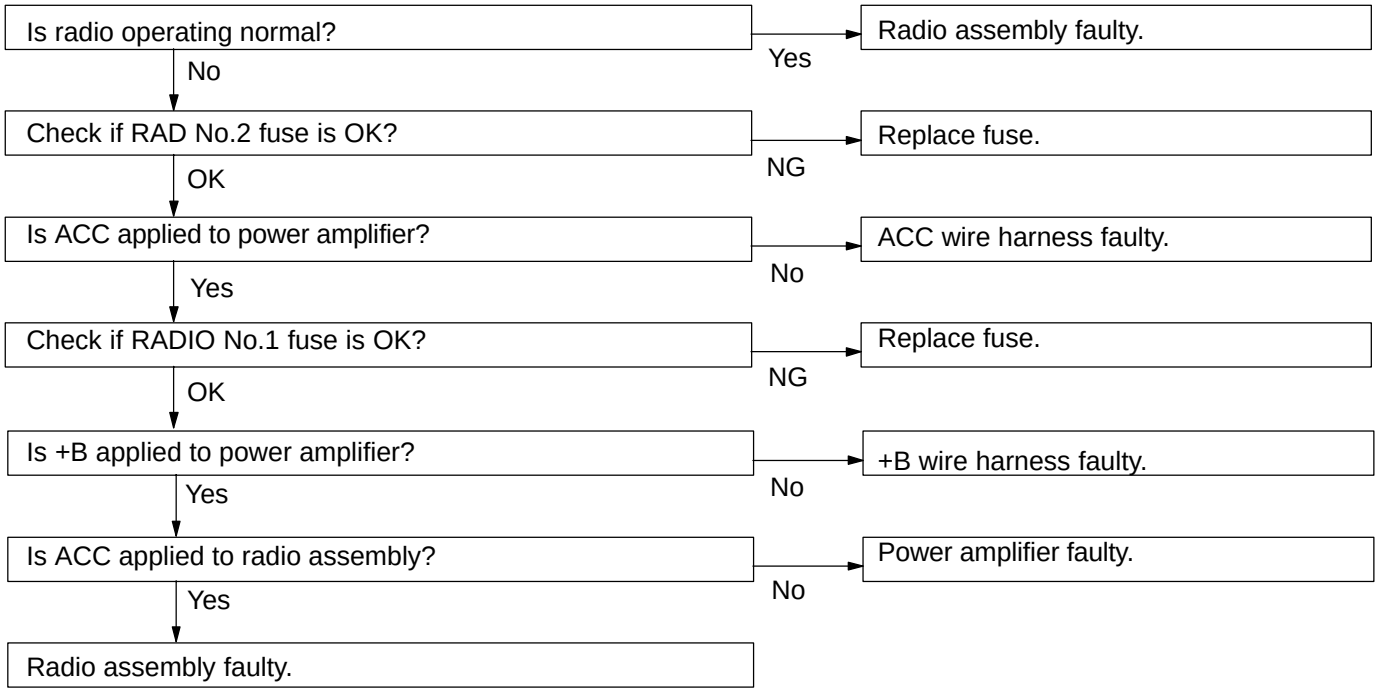

11	Tape Player	POWER COMING IN, BUT TAPE PLAYER NOT OPERATING

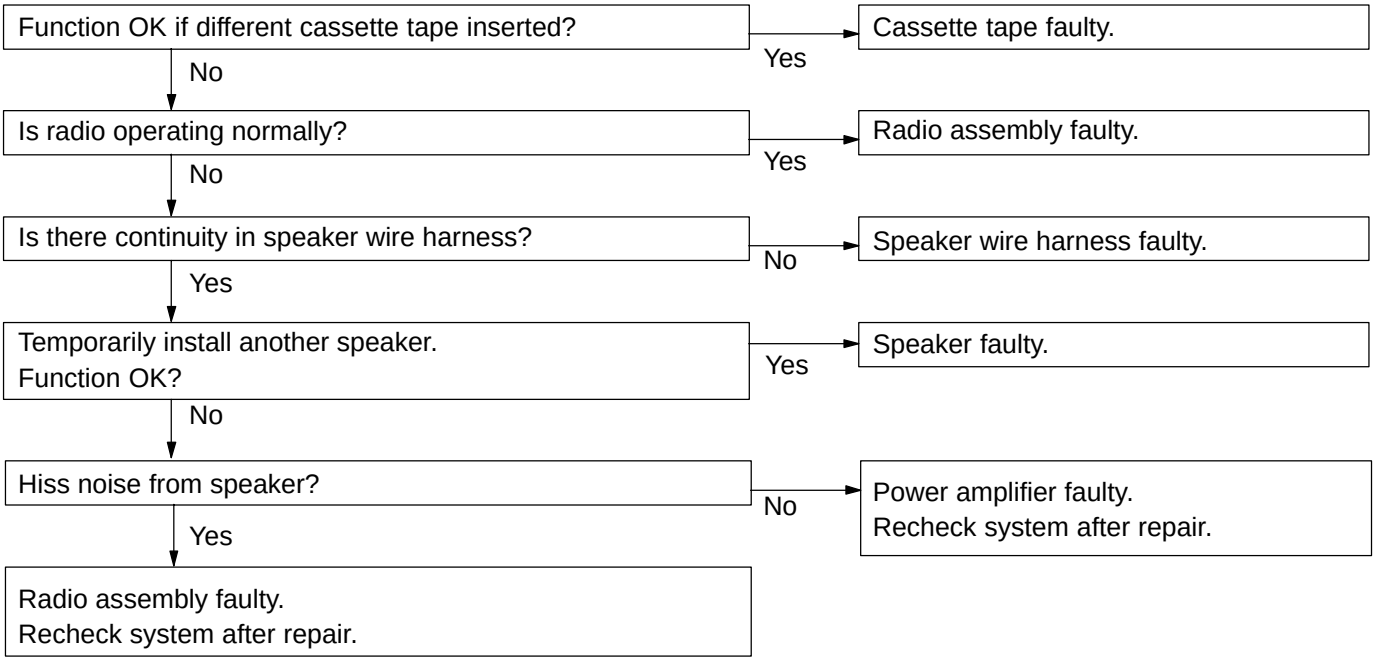

12	Tape Player	ANY SPEAKER DOES NOT WORK

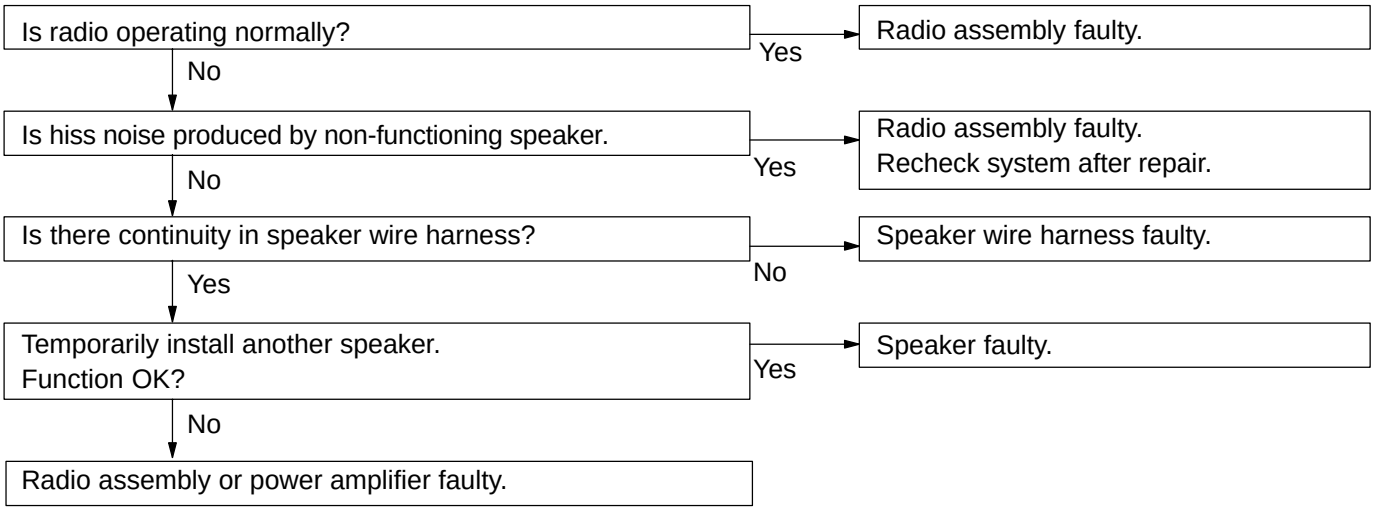

13	Tape Player	SOUND QUALITY POOR (VOLUME FAINT)

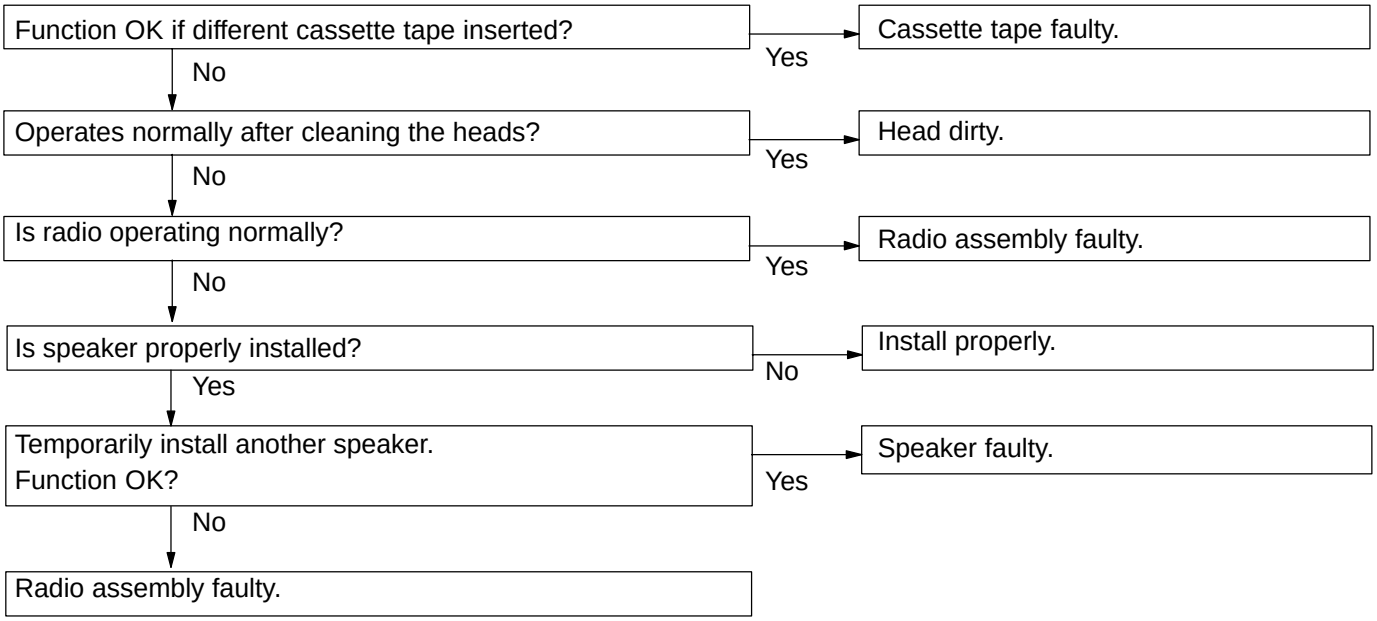

14	Tape Player	TAPE JAMMED MALFUNCTION WITH TAPE SPEED OR AUTO-REVERSE

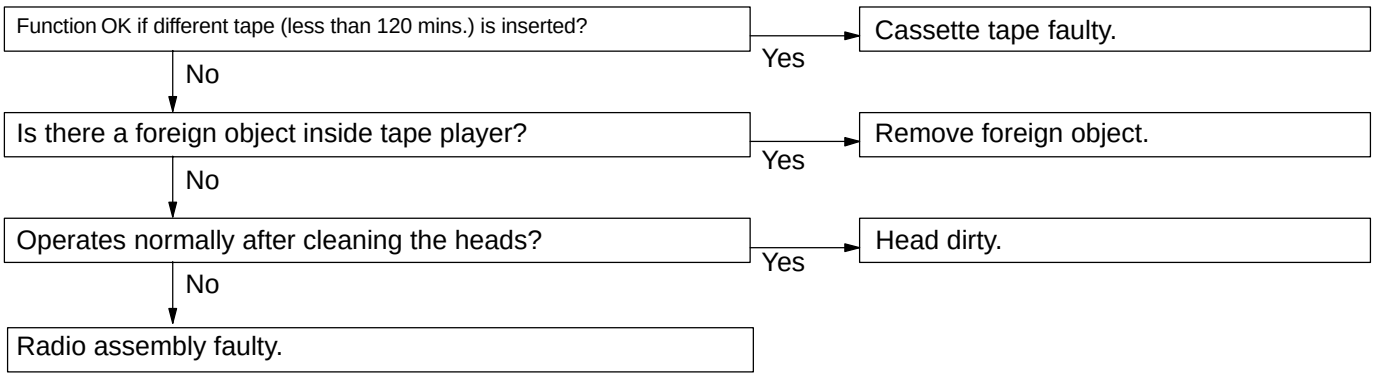

15	Tape Player	CASSETTE TAPE WILL NOT EJECTED

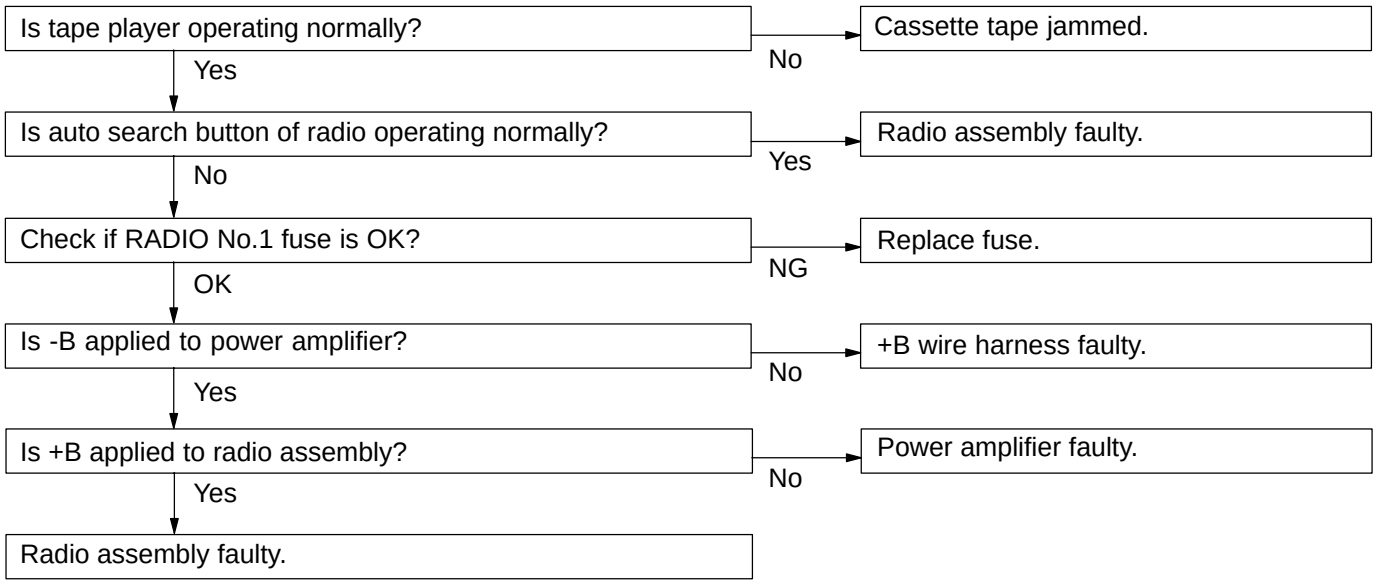

16	CD Player	CD CANNOT BE INSERTED

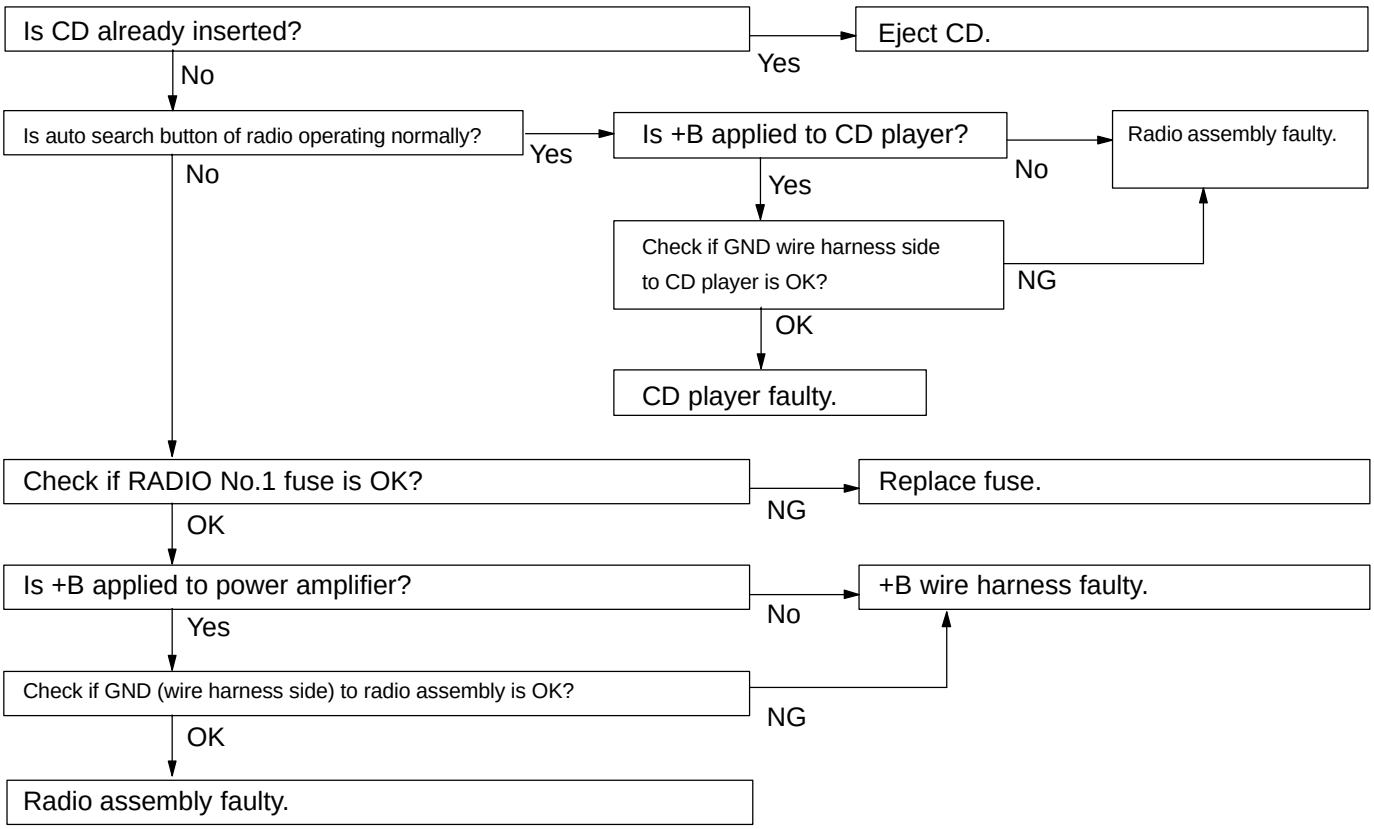

17	CD Player	CD INSERTED, BUT NO POWER

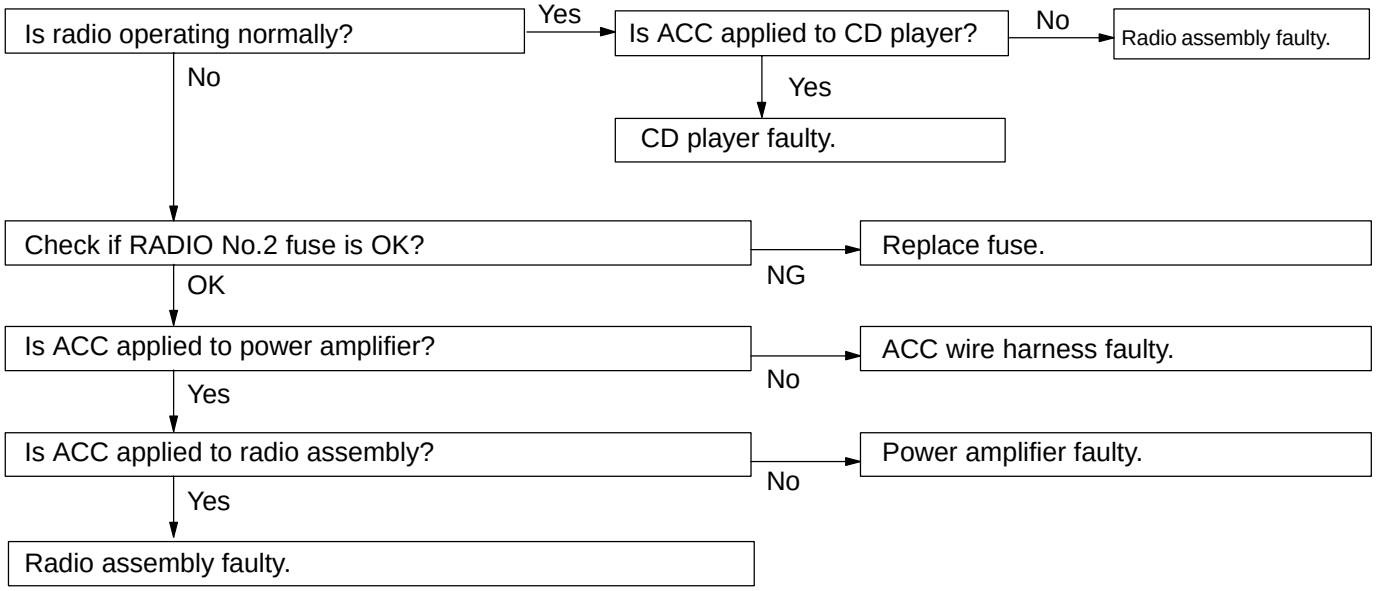

18	CD Player	POWER COMING IN, BUT CD PLAYER NOT OPERATING

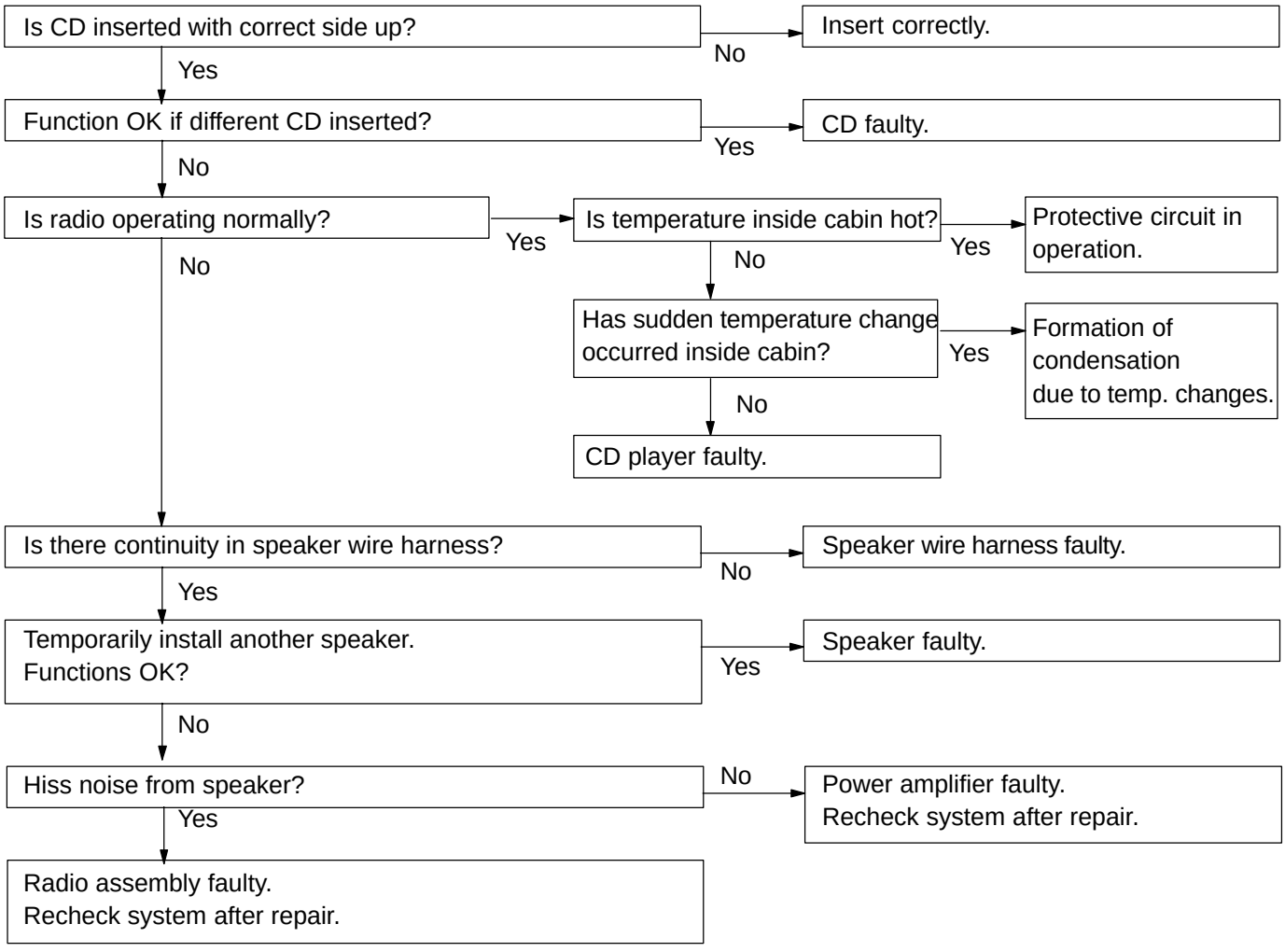

19	CD Player	SOUND JUMPS

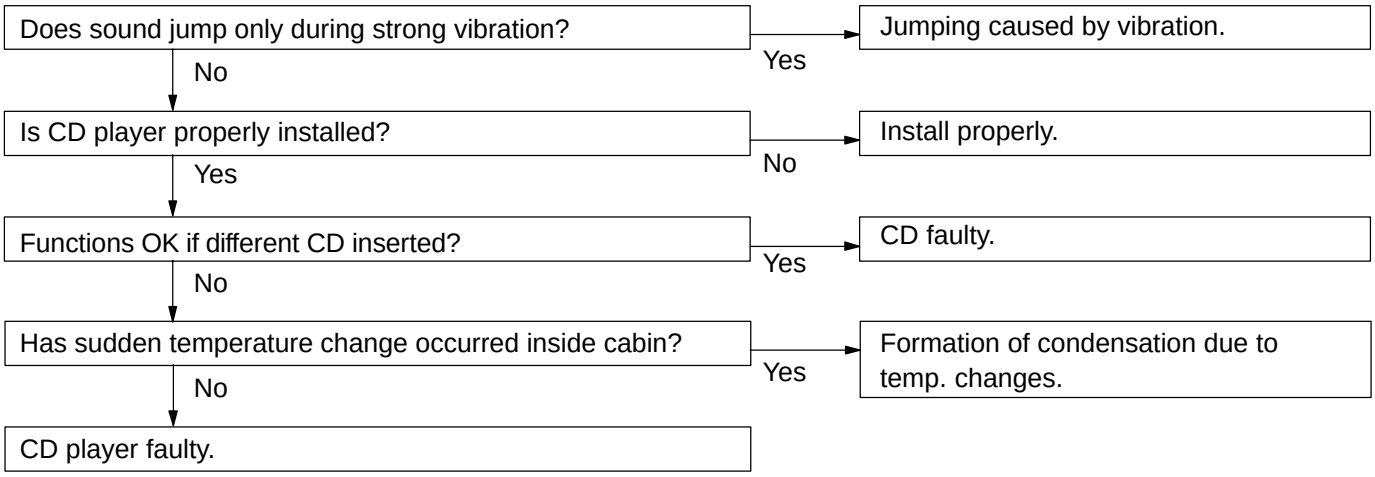

20	CD Player	SOUND QUALITY POOR (VOLUME FAINT)

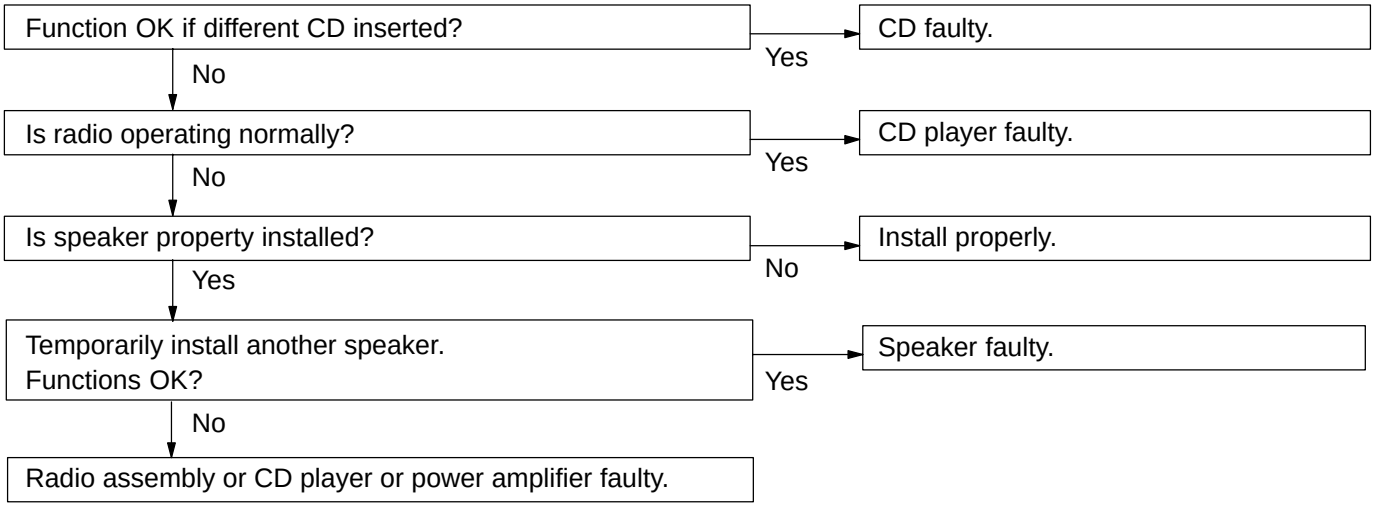

21	CD Player	ANY SPEAKER DOES NOT WORK

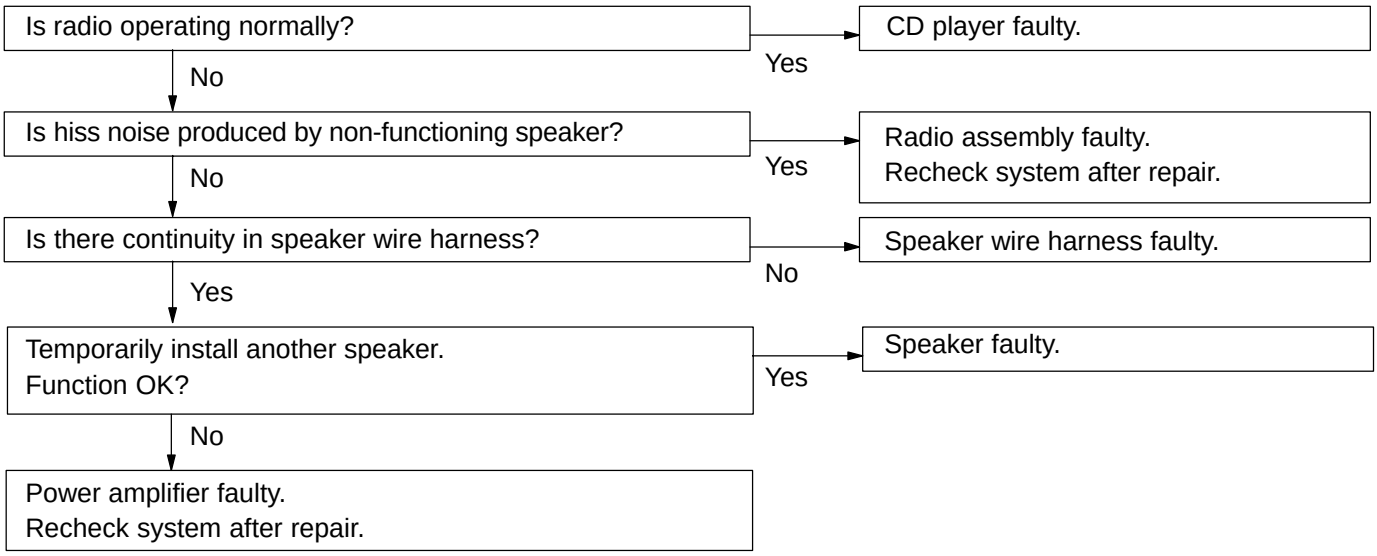

22	CD Player	CD WILL NOT BE EJECTED

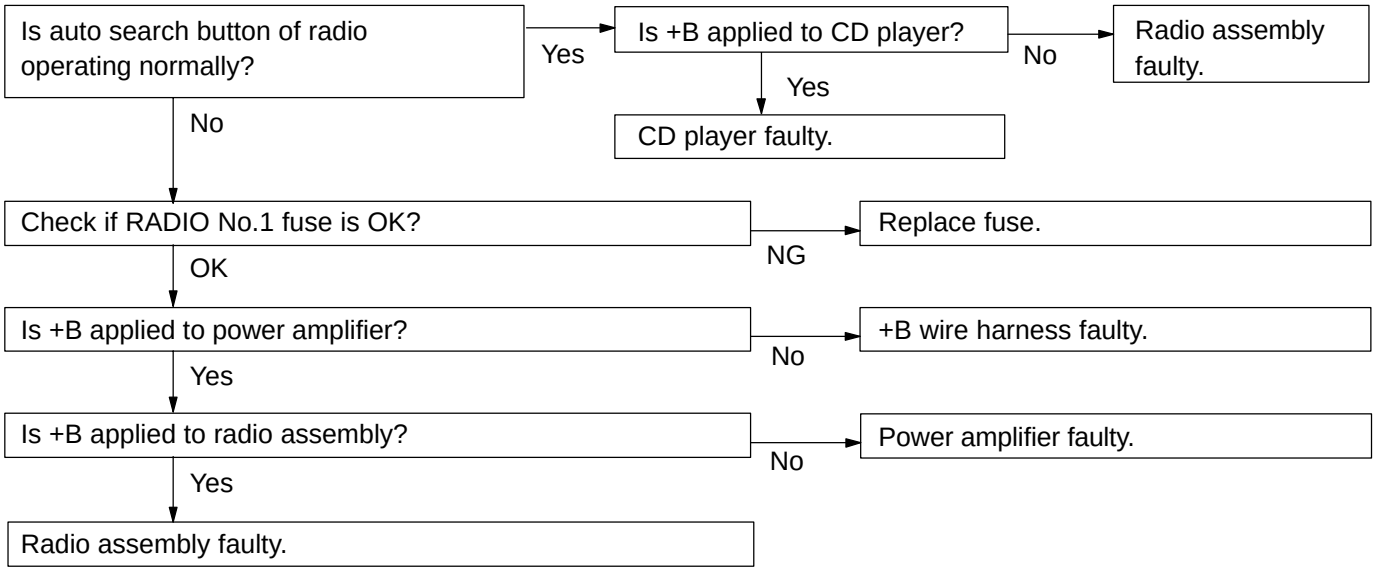

23	Power Amplifier	NO POWER COMING IN

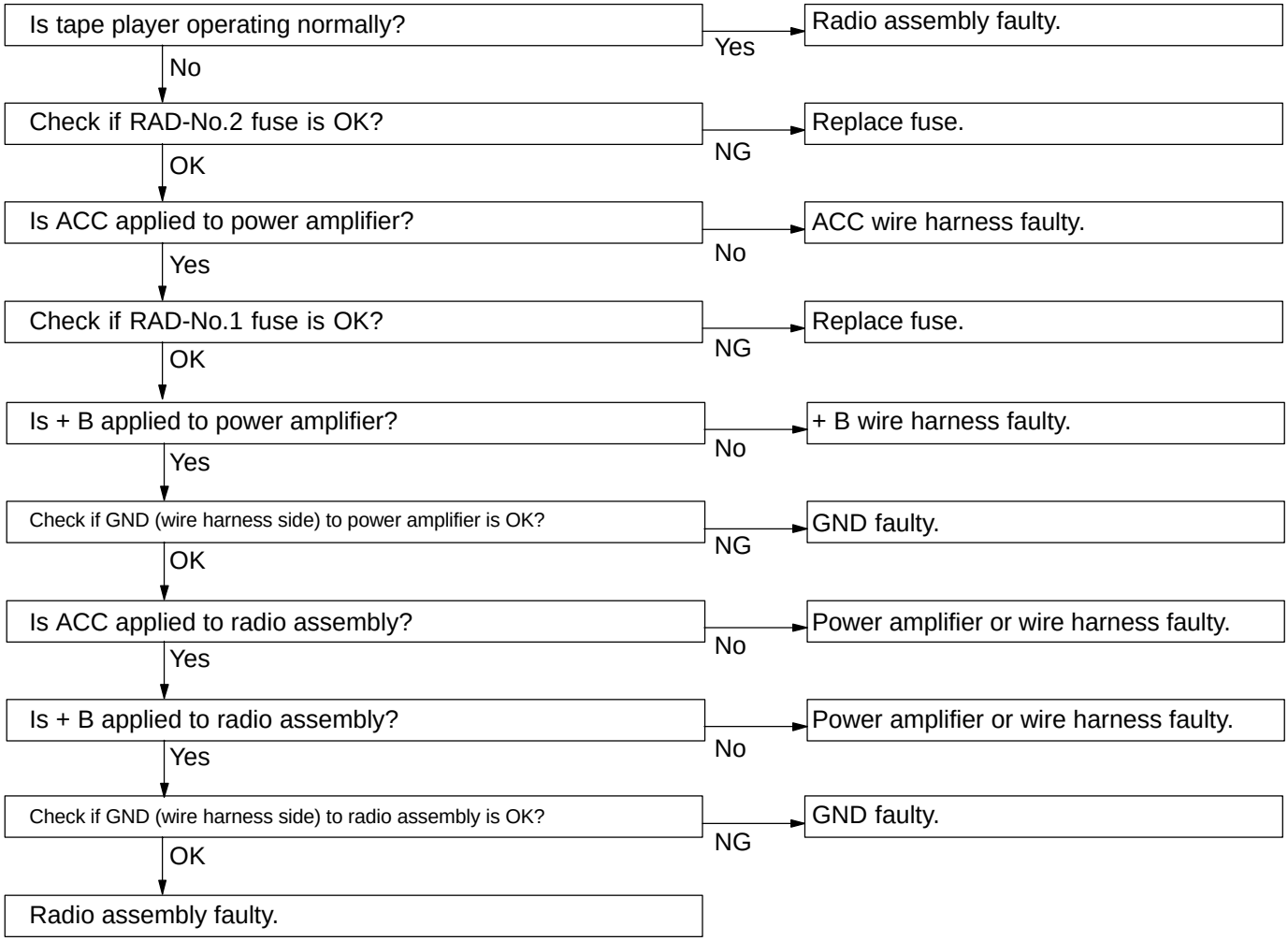

24	Power Amplifier	POWER COMING IN, BUT WOOFER (POWER) AMPLIFIER NOT OPERATING

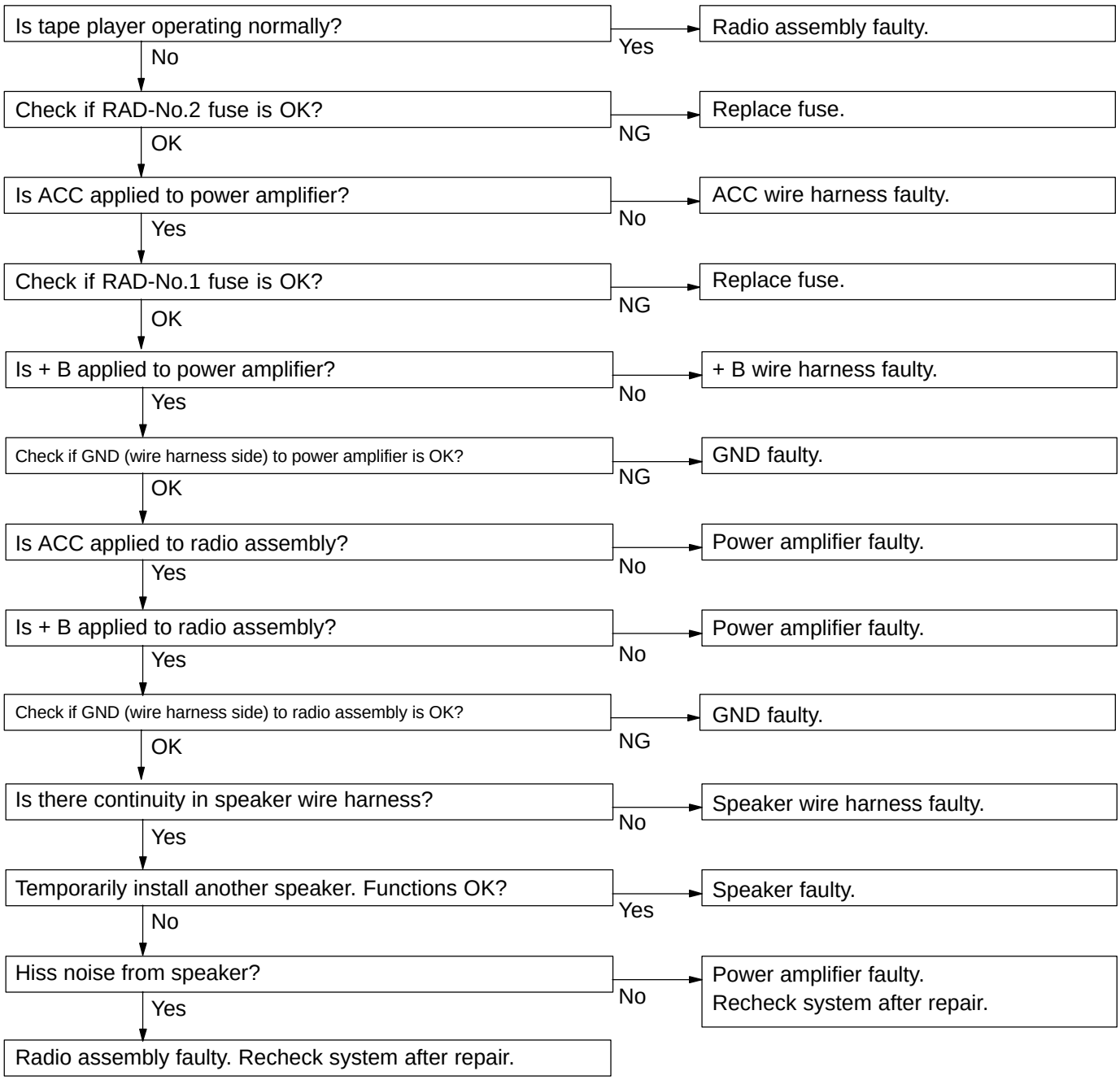

25	Power Amplifier	ANY SPEAKER DOES NOT WORK

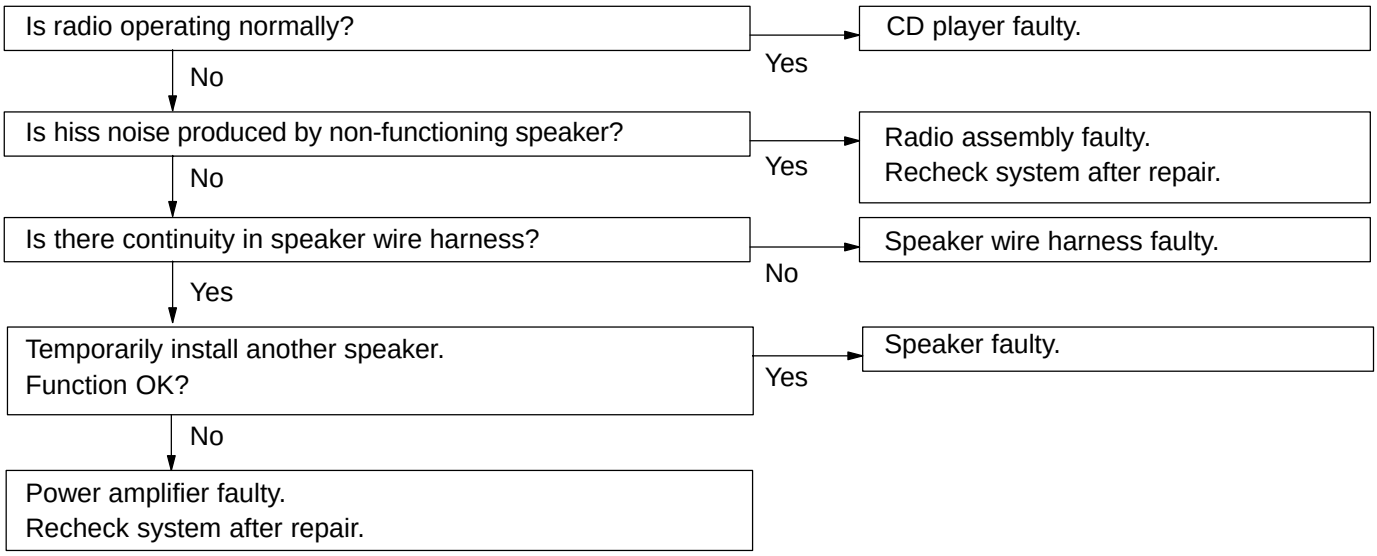

26	Antenna	ANTENNA DOES NOT FULLY EXTEND OR FULLY RETRACT

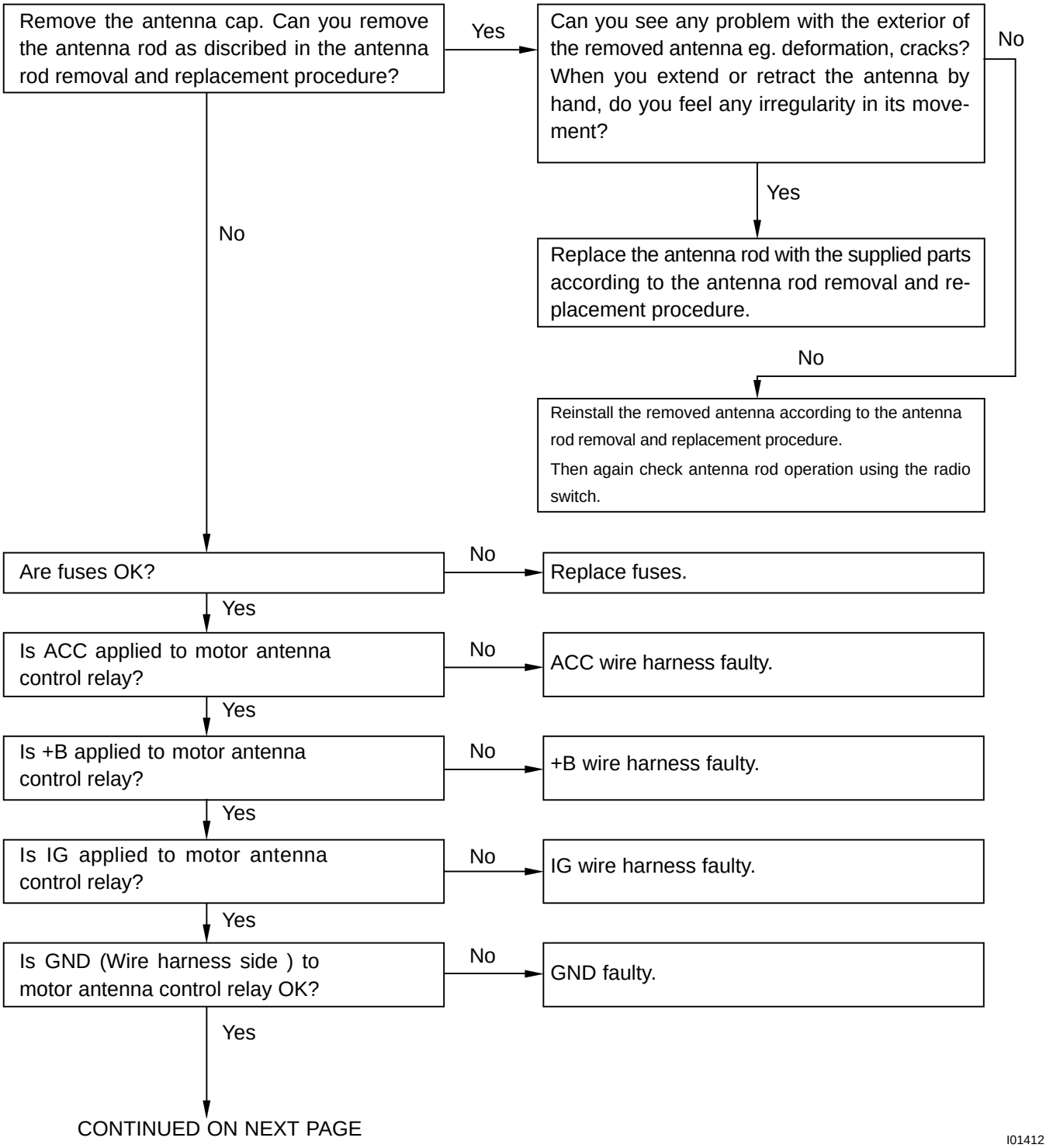

I01412

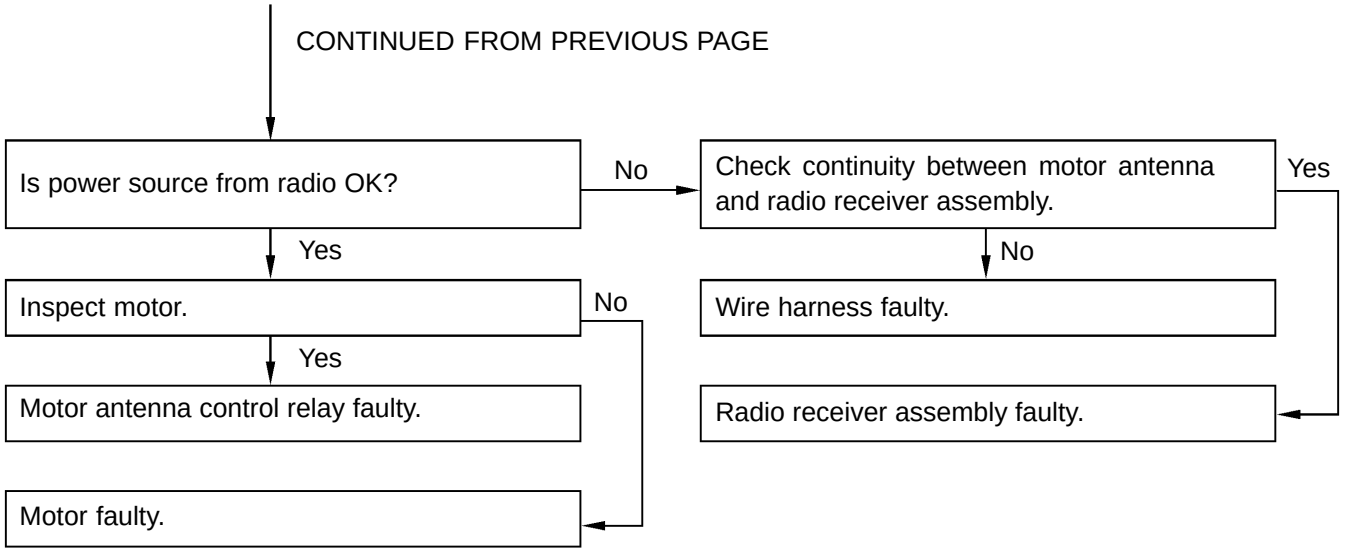

I01413

27	Antenna	ANTENNA-RELA TED

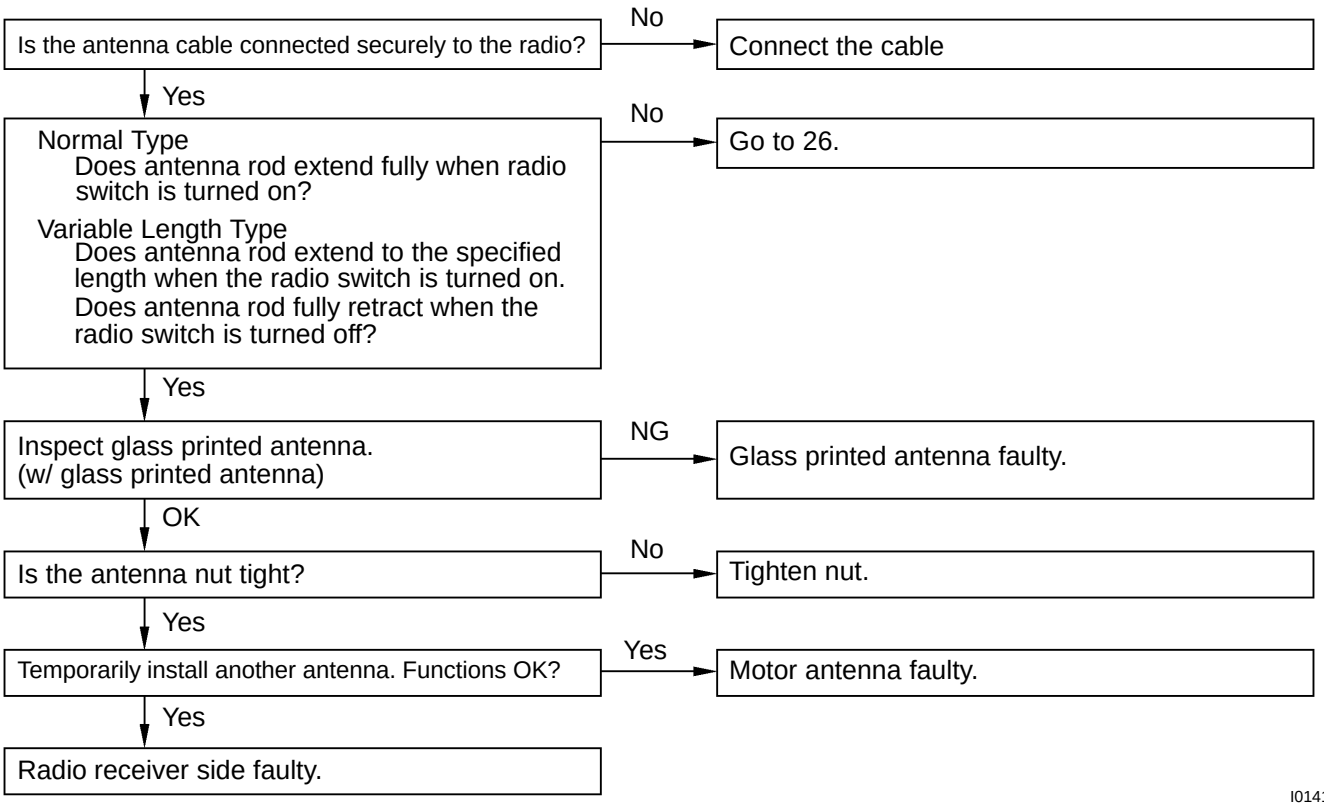

I01414

28	Noise	NOISE PRODUCED BY VIBRATION OR SHOCK WHILE DRIVING

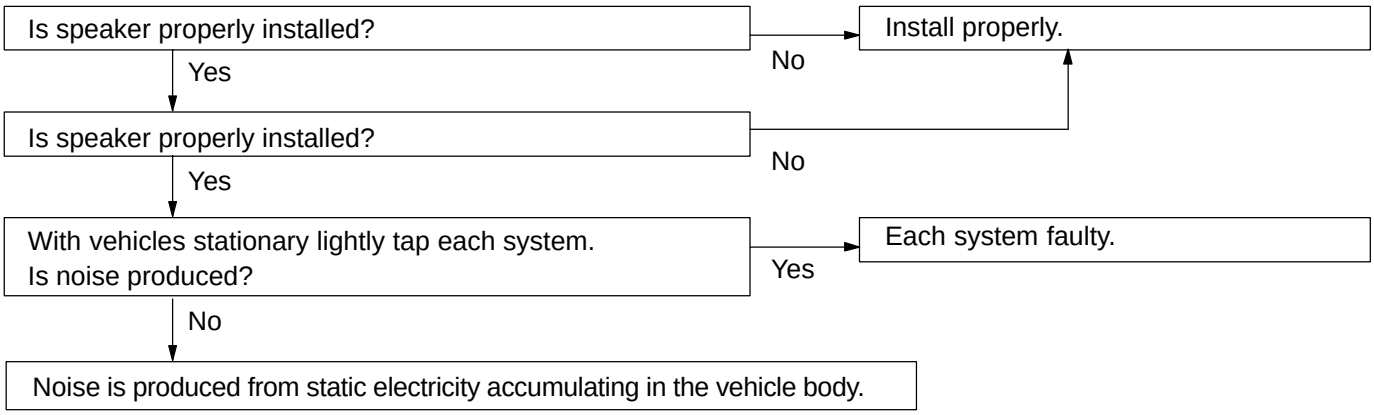

29	Noise	NOISE PRODUCED WHEN ENGINE STARTS

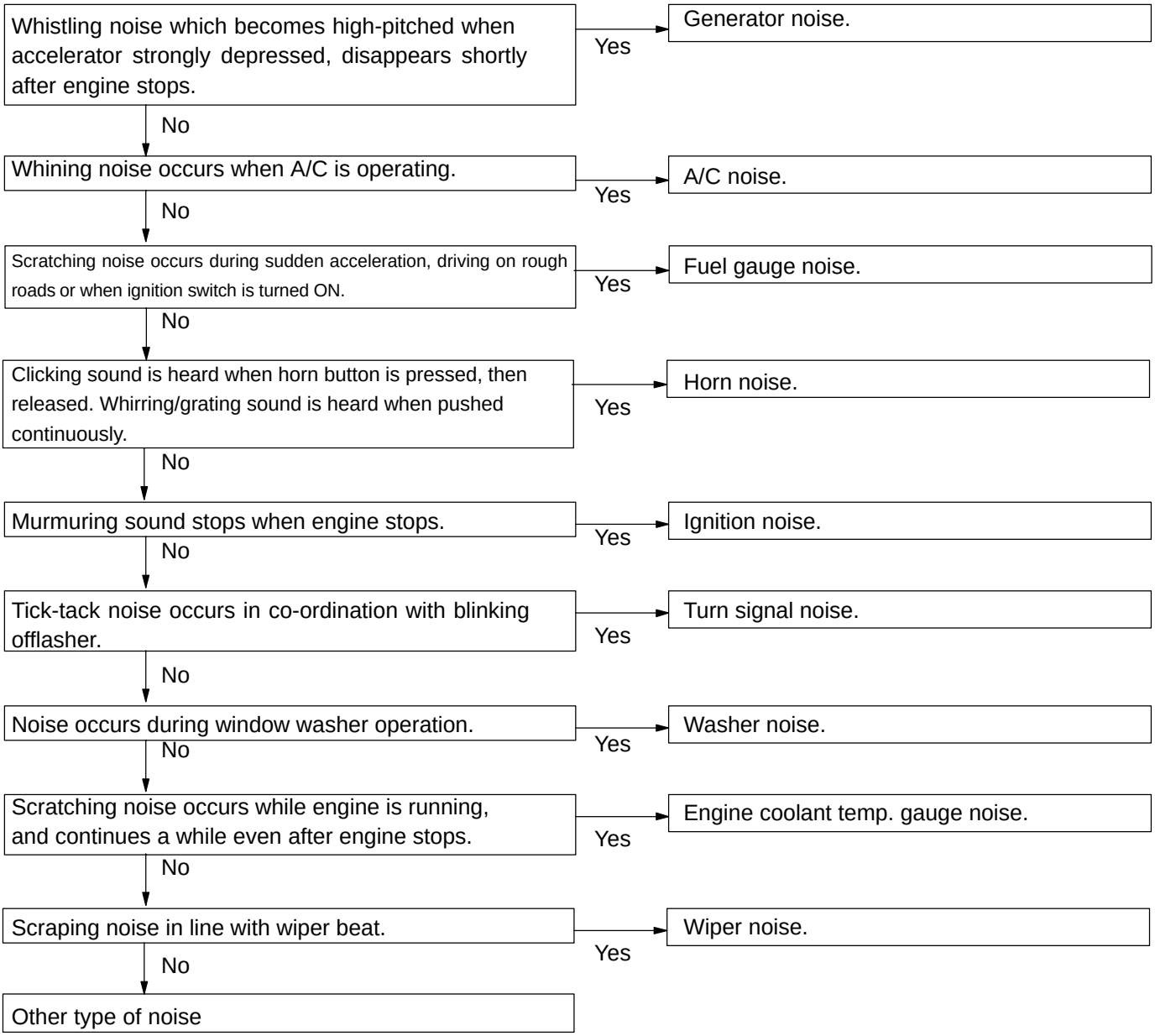

BE0EO-02

LOCATION

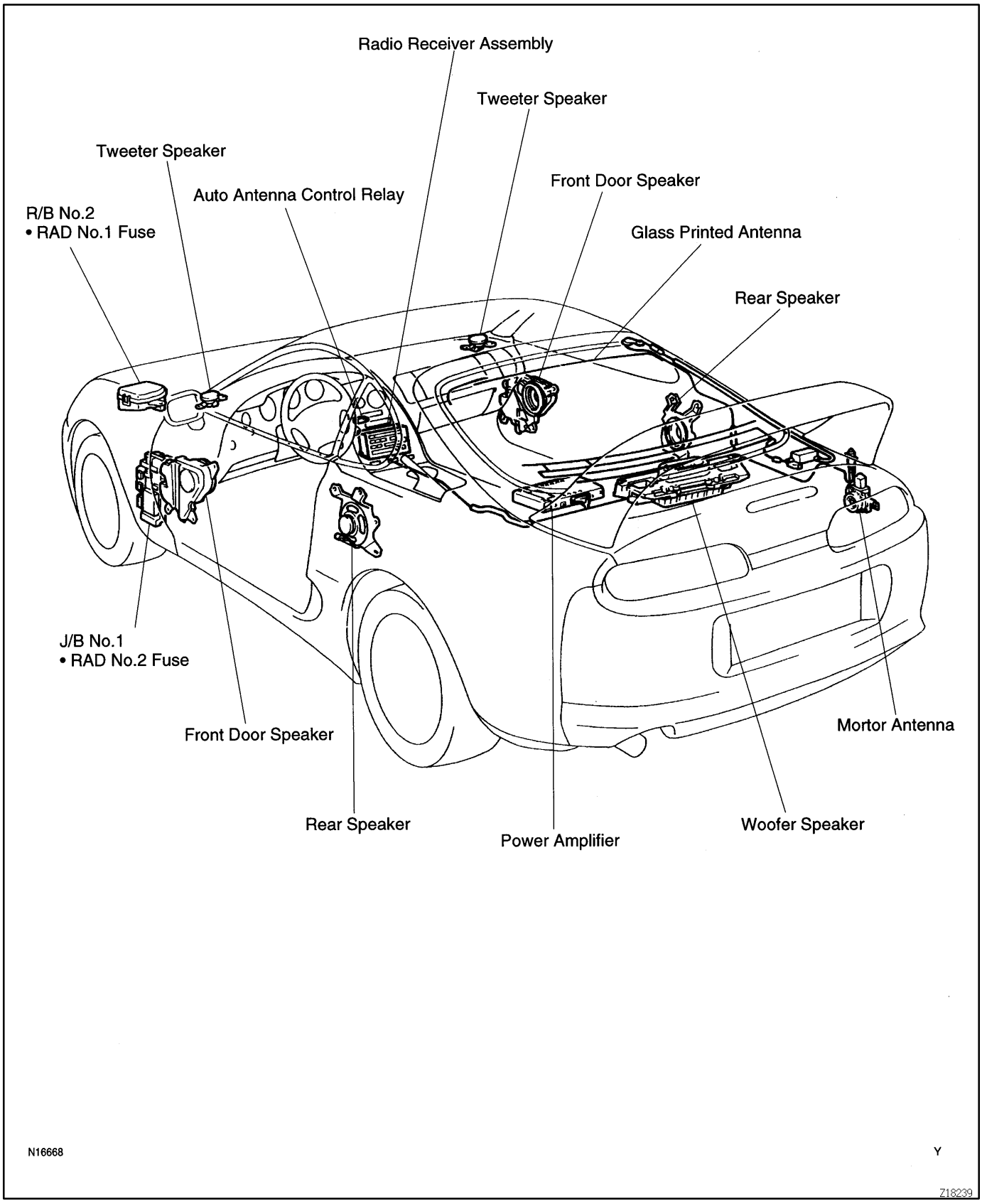

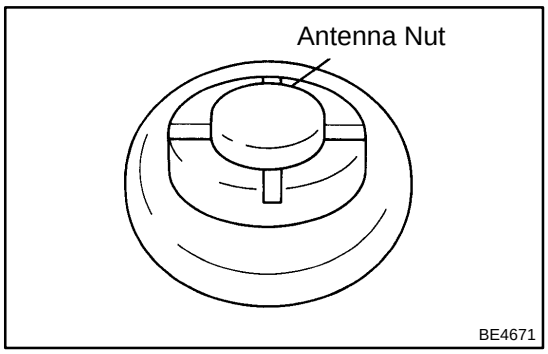

ANTENNA

BE0EP-01

REMOVAL

REMOVE ANTENNA ROD

HINT:

Do this operation with the negative (-) terminal cable connected to the battery.

(a) Turn the ignition switch to ”LOCK” position.

(b) Remove the antenna nut.

(c) Press the ”AM” button on the radio receiver, and simultaneously turn the ignition switch to ”ACC” position.

HINT:

- The rod will extend fully and be released from the motor antenna.
- After removing the antenna rod, leave the ignition switch at ”ACC”.

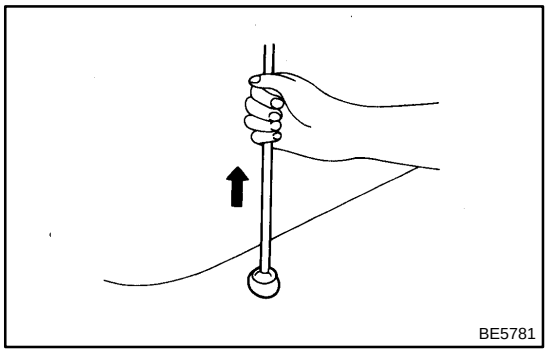

NOTICE:

To prevent body damage when the antenna rod is released, hold the rod while it comes out.

BE0EQ-01

INSPECTION

1. INSPECT RELAY CIRCUIT

Disconnect the connector from the relay and inspect connector on wire harness side, as shown in the chart.
If circuit is not as specified, replace the relay.

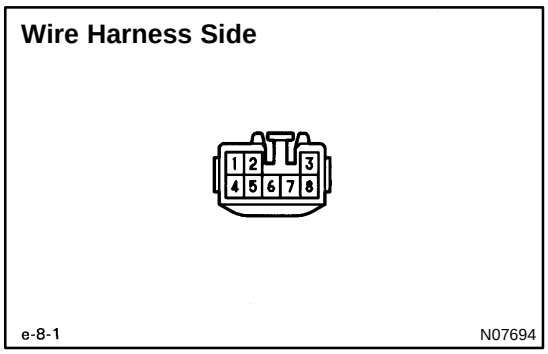

Tester connection	Condition	Specified condition
6 - Ground	Constant	Continuity
2 - 3	Constant	Continuity
1 - Ground	Constant	Battery positive voltage
4 - Ground	Ignition switch position ON	Battery positive voltage
5 - Ground	Ignition switch position ACC or ON	Battery positive voltage
7 - Ground	Ignition switch position ACC or ON and radio switch ON	Battery positive voltage
8 - Ground	Ignition switch position ACC or ON	Battery positive voltage

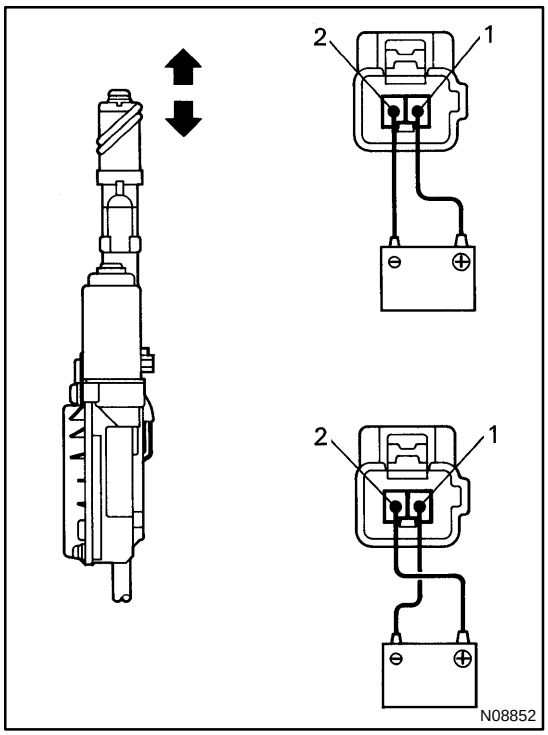

2. INSPECT MOTOR ANTENNA

(a) Install antenna nut.
(b) Connect the positive (+) lead from the battery to terminal 1 and the negative (-) lead to terminal 2.
(c) Check that the motor turns (moves upward).

NOTICE:

These tests must be done quickly (within 3 - 5 seconds) to prevent the coil from burning out.

(d) Then, reverse the polarity, and check that the motor turns the opposite way (moves downward).

NOTICE:

These tests must be done quickly (within 3 - 5 seconds) to prevent the coil from burning out.

HINT:

When the motor is normal, lower the antenna to its lowest position.
If operation is not as specified, replace the antenna motor assembly.

3. INSPECT GLASS PRINTED ANTENNA

(Use same procedure as for ”INSPECT DEFOGGER WIRES”.)

4. REPAIR GLASS PRINTED ANTENNA

(Use same procedure as for ”REPAIR DEFOGGER WIRES”.)

BE0ER-01

INSTALLATION

INSTALL ANTENNA ROD

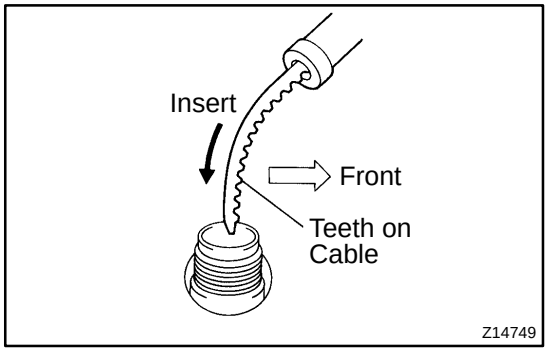

(a) Insert the cable of the rod until it reaches the bottom.

HINT:

- When inserting the cable, the teeth on the cable must face toward the rear of the vehicle.
- Insert the cable approx. 400 mm.

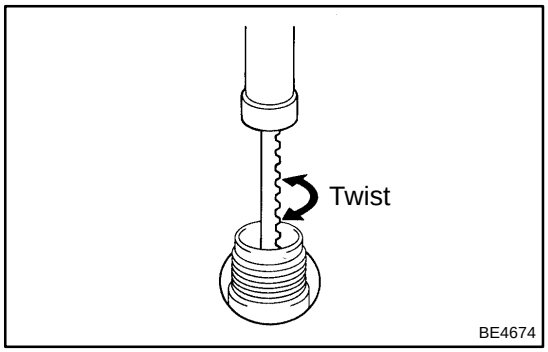

(b) Wind the cable to retract the rod by turning the ignition switch to ”LOCK” position.

HINT:

- If the ignition switch is already in ”LOCK” position, do step 1 (c) first, then turn the ignition switch to ”ACC” position.
- In case the cable is not wound, twist it as shown in the illustration.
- Even if the rod has not retracted fully, install the antenna nut and inspect the antenna rod operation. It will finally retract fully.

(c) Inspect the antenna rod operation by pushing the radio wave band select buttons.

CLOCK

BE1L5-01

TROUBLESHOOTING

HINT:

Troubleshoot the clock according to the table below.

Problem	No.
Clock will not operate	1
Clock loses or gains time	2

± 1.5 seconds / day

1. PROBLEM No.1

1	**CLOCK WILL NOT OPERATE**

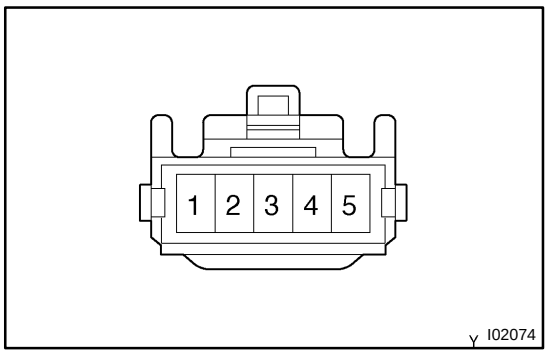

(a) Check that the battery positive voltage is 10 - 16 V.

If voltage is not as specified, replace the battery.

(b) Check that the DOME fuse is not blown.

If the fuse is blown, replace the fuse and check for short.

(c) Troubleshoot the clock as follows.

HINT:

Inspect the connector on the wire harness side.

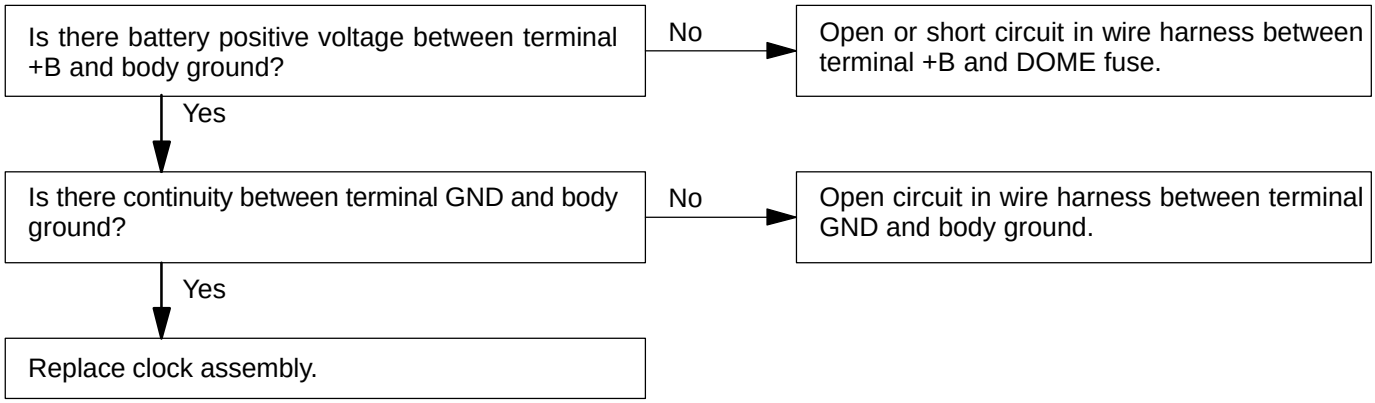

2. PROBLEM No.2

2	CLOCK LOSES OR GAINS TIME

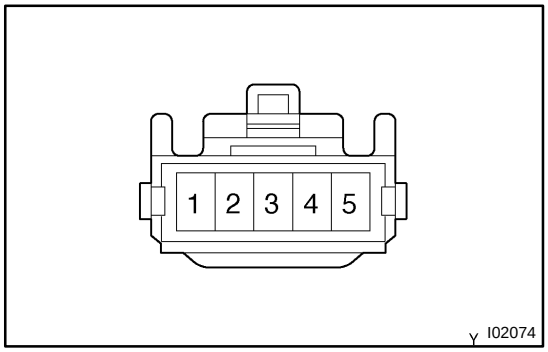

(a) Check that the battery positive voltage is 10 - 16 V.
If voltage is not as specified, replace the battery.
(b) Inspect the error of the clock.
Allowable error (per day): ± 2.0 seconds
If the error exceeds the allowable error, replace the clock assembly.
(c) Check if the clock adjusting button is sticking in position and has failed to return.
If the button has not returned, repair or replace the clock assembly.
(d) Troubleshoot the clock as follows.
HINT:
Inspect the connector on the wire harness side.

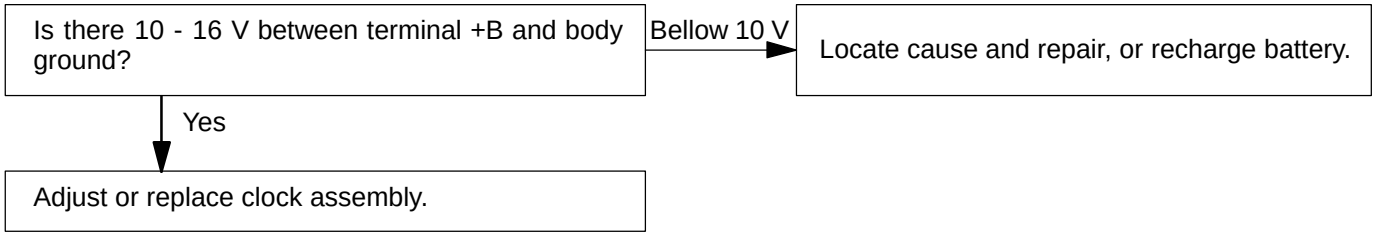

CLIP

BO0Q7-01

REPLACEMENT

The removal and installation methods of typical clips used in body parts are shown in the table below.
HINT:
If the clip is damaged during the operation, always replace it with a new clip.

Shape (Example)	Removal/ Installation
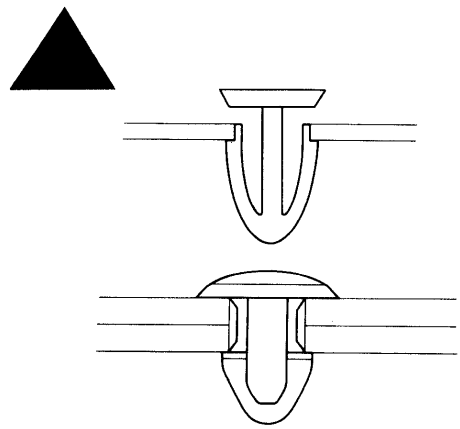	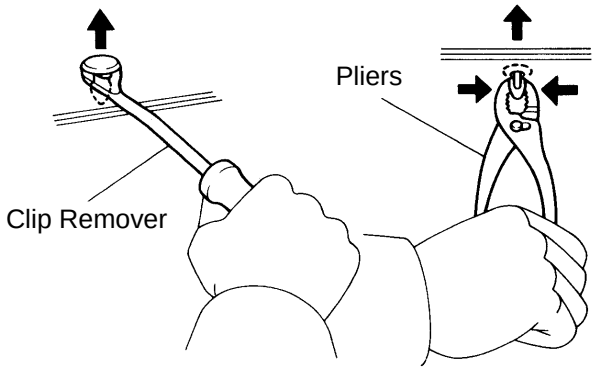
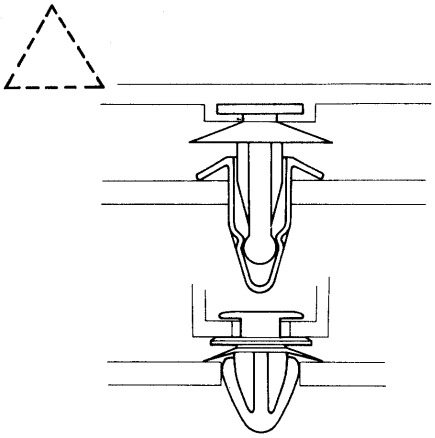	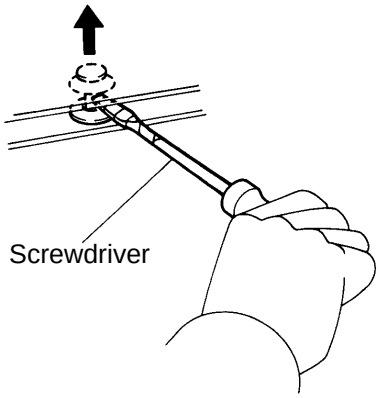
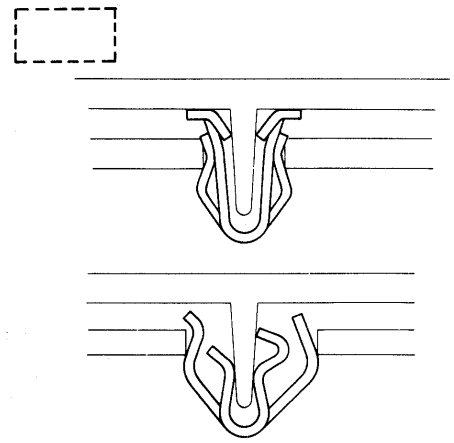	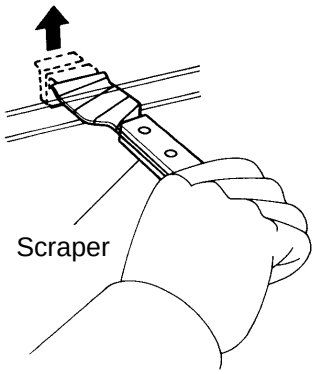

V00005

Shape (Example)	Removal/ Installation
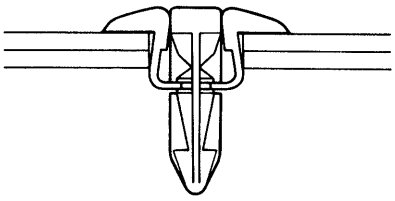	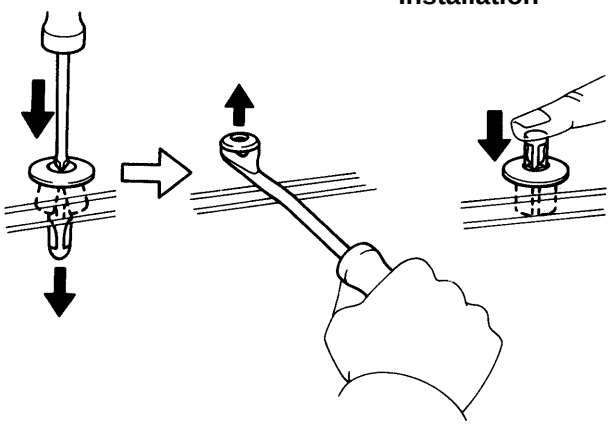
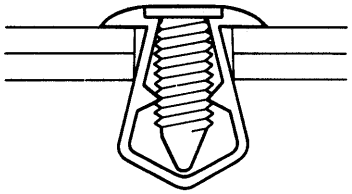	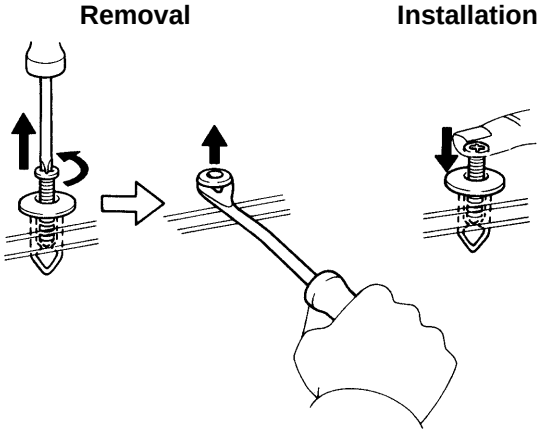

V00012

SRS AIRBAG

BO0Q8-01

PRECAUTION

The TOYOTA SUPRA is equipped with an SRS (Supplemental Restraint System) such as the driver airbag and front passenger airbag. Failure to carry out service operation in the correct sequence could cause the SRS to unexpectedly deploy during servicing, possibly leading to a serious accident. Before servicing (including removal or installation of parts, inspection or replacement), be sure to read the precautionary notices in the RS section.

FRONT BUMPER

COMPONENTS

BO0Q9-01

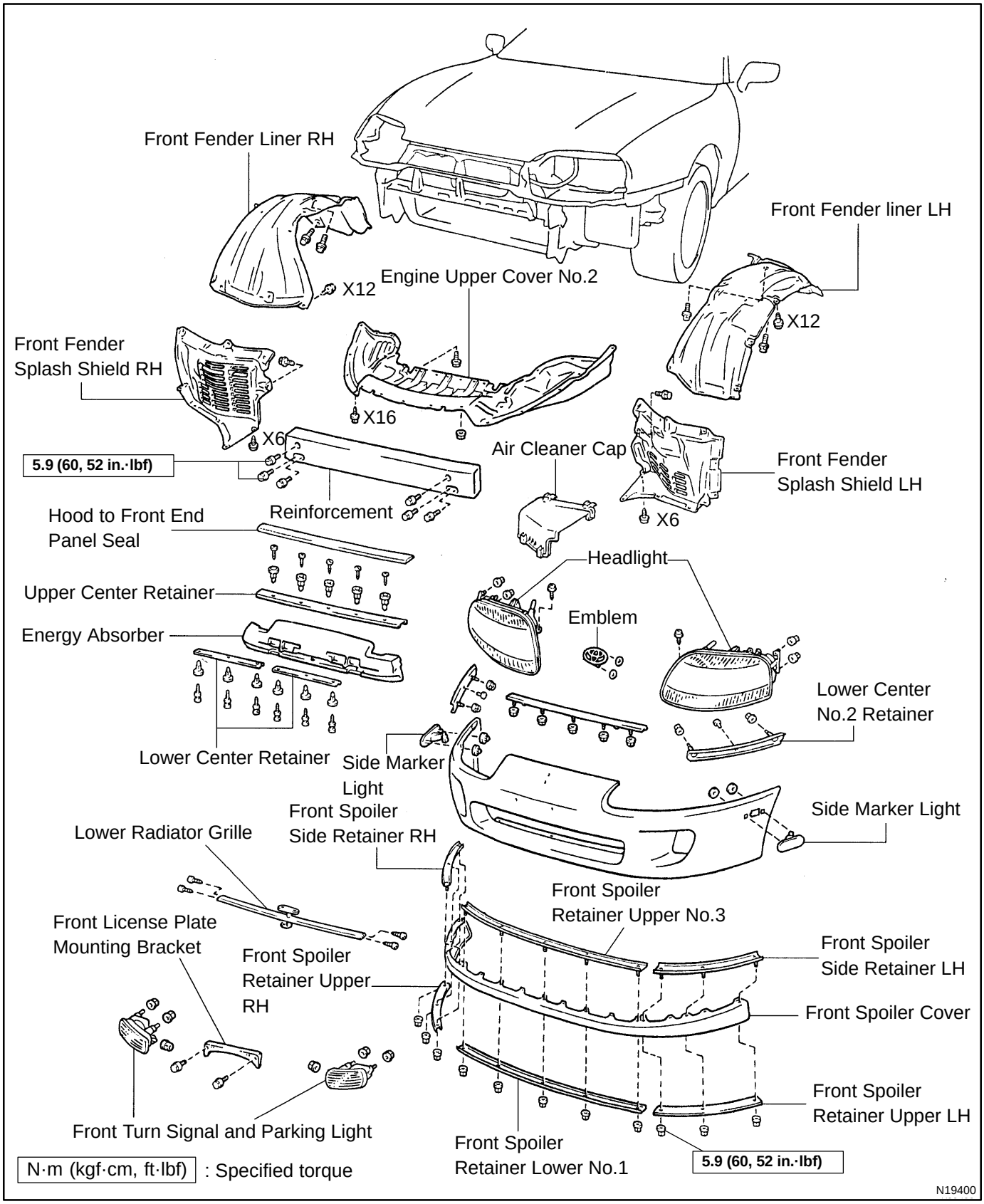

REAR BUMPER

BO0QA-01

COMPONENTS

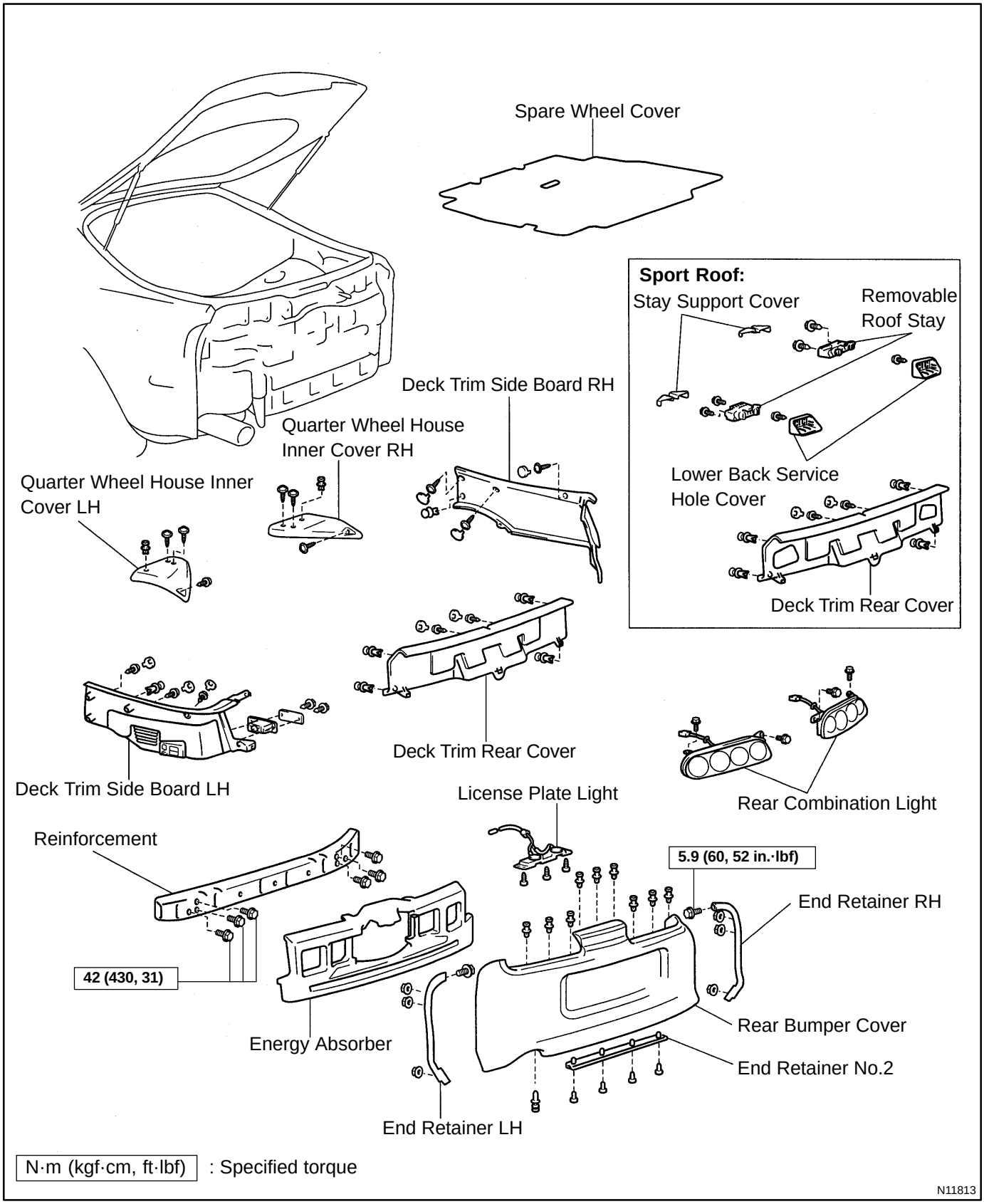

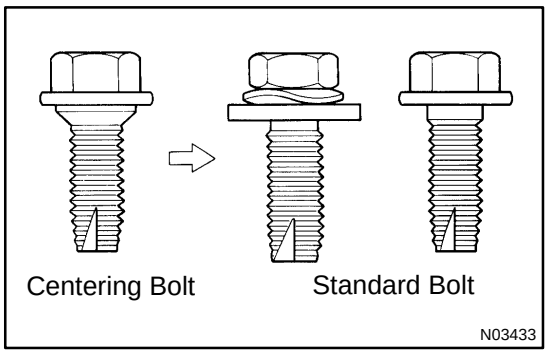

HOOD

ADJUSTMENT

BO0QB-01

HINT:

Since the centering bolt is used as the hood hinge and lock set bolt, the hood and lock cannot be adjusted with it on. Substitute the standard bolt for the centering bolt.

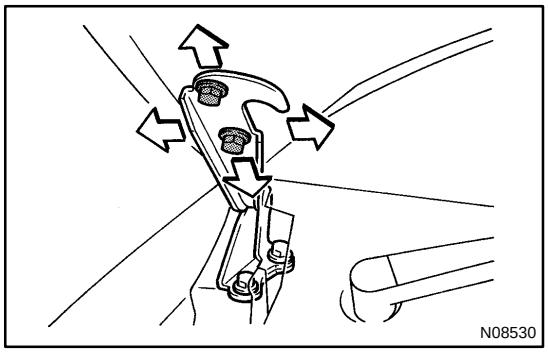

1. ADJUST HOOD IN FORWARD/REARWARD AND LEFT/RIGHT DIRECTIONS

Adjust the hood by loosening the hood side hinge bolts.

Torque: 13 N·m (130 kgf·cm, 9.4 ft·lbf)

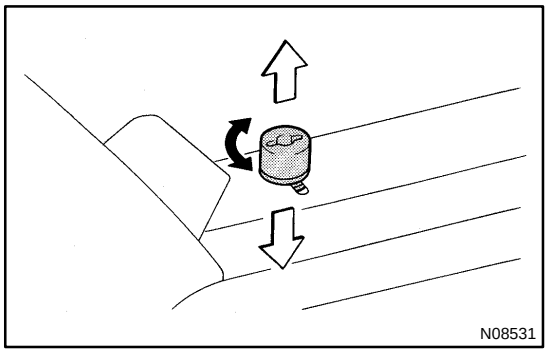

2. ADJUST FRONT EDGE OF HOOD IN VERTICAL DIRECTIONS

Adjust the hood by turning the cushions.

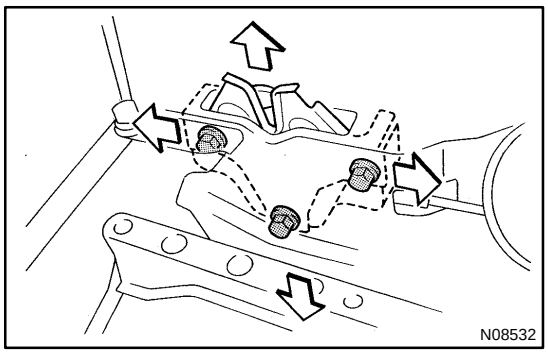

3. ADJUST HOOD LOCK

Adjust the lock by loosening bolts.

Torque: 8.8 N·m (90 kgf·cm, 78 in.·lbf)

FRONT DOOR

COMPONENTS

BO0QC-01

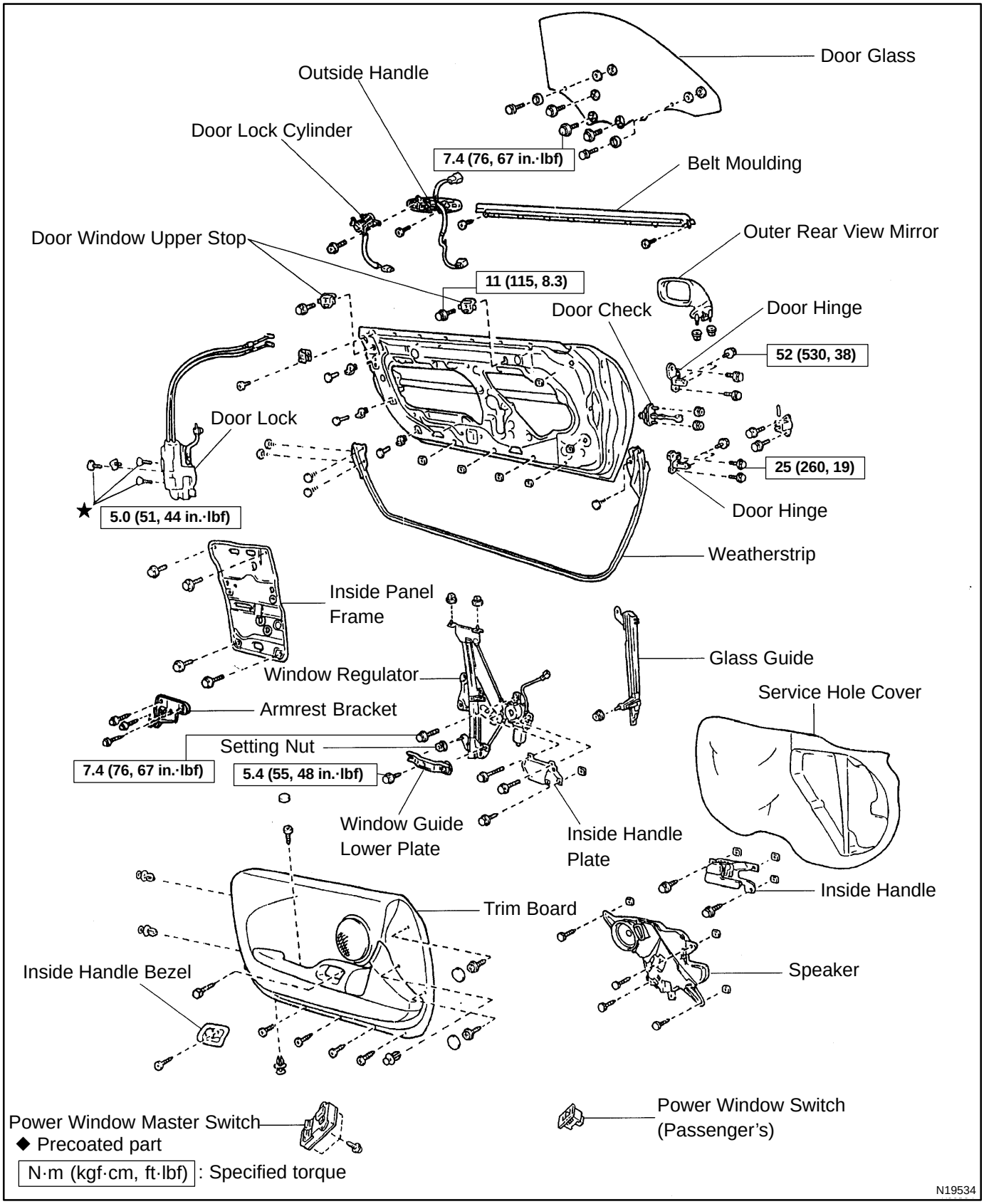

BO0QD-01

DISASSEMBLY

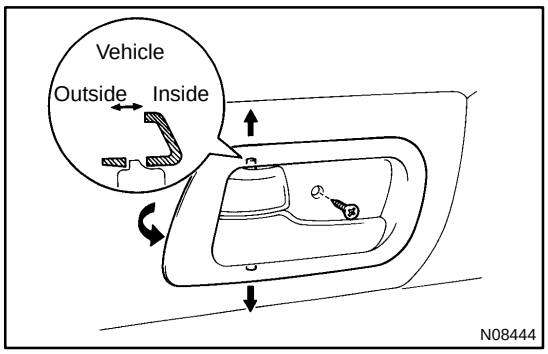

1. REMOVE INSIDE HANDLE BEZEL

Remove the screw, then pull the inside handle bezel.

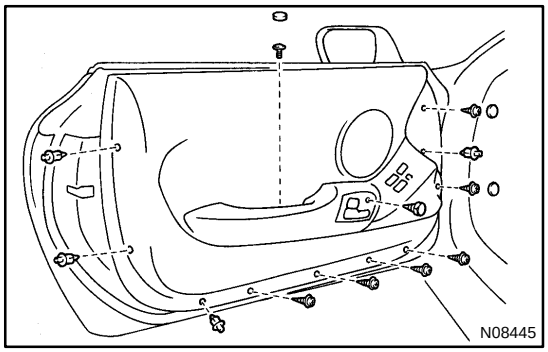

2. REMOVE TRIM BOARD

3. REMOVE THESE PARTS:

(a) Power window master switch
(b) Speaker
(c) Inside handle
(d) Inside handle plate
(e) Armrest bracket
(f) Service hole cover
(g) Weatherstrip
(h) Inside panel frame
(i) Door glass

Torque: 7.4 N·m (76 kgf·cm, 67 in.·lbf)

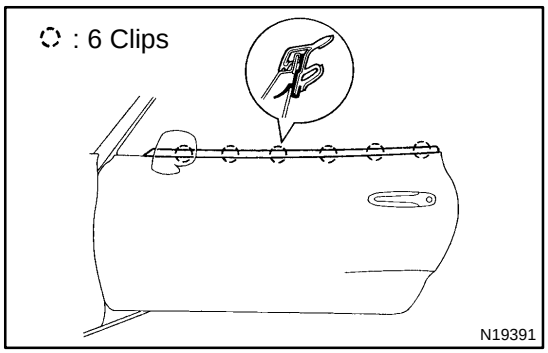

4. REMOVE DOOR BELT MOULDING

(a) Remove the clip.
(b) Using a screwdriver, remove the door belt moulding as shown in the illustration.

HINT:

Tape the screwdriver tip before use.

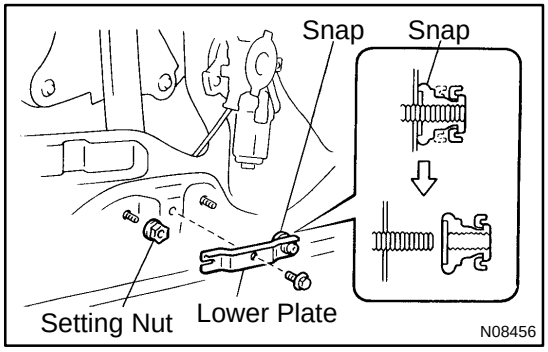

5. REMOVE WINDOW GUIDE LOWER PLATE

(a) Remove the bolt of the lower plate and connector.
Torque: 5.4 N·m (55 kgf·cm, 48 in.·lbf)
(b) Unlock the snap by pulling the lower plate.
(c) Remove the snap and lower plate from the stud bolt of the lower bracket.
(d) Remove the setting nut from the lower bracket.

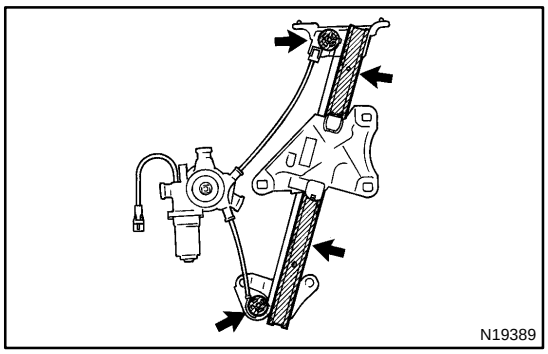

6. REMOVE WINDOW REGULATOR

(a) Disconnect the connector.

(b) Remove the bolt, 2 nuts and window regulator.

Torque: 7.4 N·m (76 kgf·cm, 67 in.·lbf)

HINT:

At the time of reassembly, please refer to the following item.

Apply MP grease to the glass guide and rollers of the window regulator.

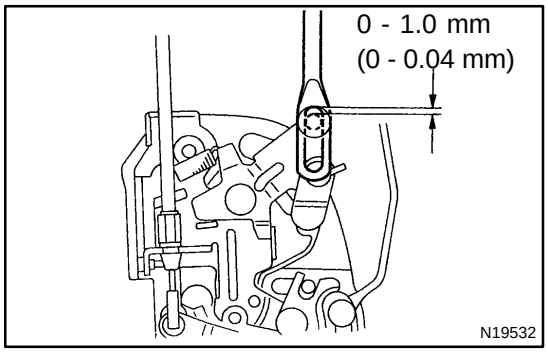

7. REMOVE DOOR LOCK

(a) Disconnect the connector and clamp.

(b) Disconnect the link from the outside handle.

HINT:

At the time of reassembly, please refer to the following item.

After connecting the link, check that the clearance is within the specification as shown in the illustration.

(c) Remove the 3 screws.

Torque: 5.0 N·m (51 kgf·cm, 44 in.·lbf)

HINT:

At the time of reassembly, please refer to the following item.

Apply adhesive to the 3 screws.

Part No.08833-00070, THREE BOND 1324 or equivalent.

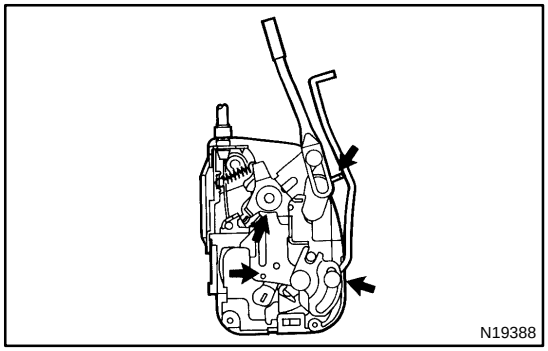

(d) Remove the door lock through the service hole.

HINT:

At the time of reassembly, please refer to the following item.

Apply MP grease to the sliding and rotating parts of the door lock.

8. REMOVE THESE PARTS:

(a) Outside handle

(b) Door lock cylinder

(c) Outer rear view mirror

BO0QE-01

ADJUSTMENT

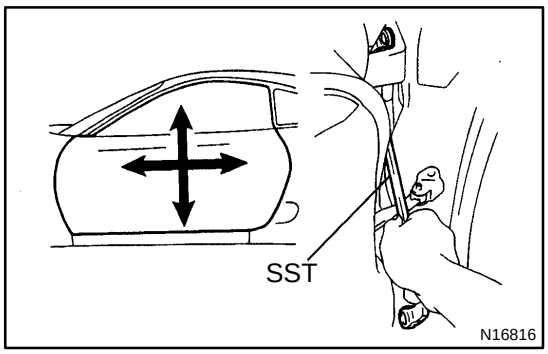

1. ADJUST DOOR IN FORWARD/REARWARD AND VERTICAL DIRECTIONS

Using SST, adjust the door by loosening the body side hinge bolts.

SST 09812-00020

Torque: 52 N·m (530 kgf·cm, 38 ft·lbf)

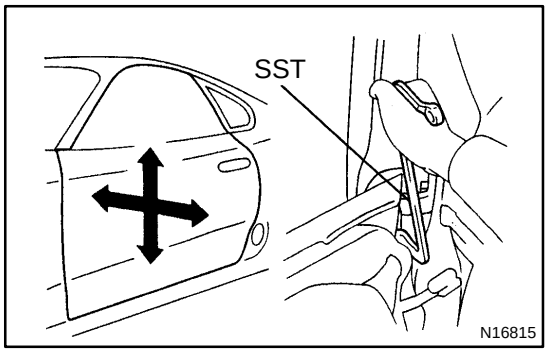

2. ADJUST DOOR IN LEFT/RIGHT AND VERTICAL DIRECTIONS

Using SST, adjust the door by loosening the door side hinge bolts.

SST 09812-00010

HINT:

Substitute the standard bolt for the centering bolt.

(See page BO-6)

Torque: 25 N·m (260 kgf·cm, 19 ft·lbf)

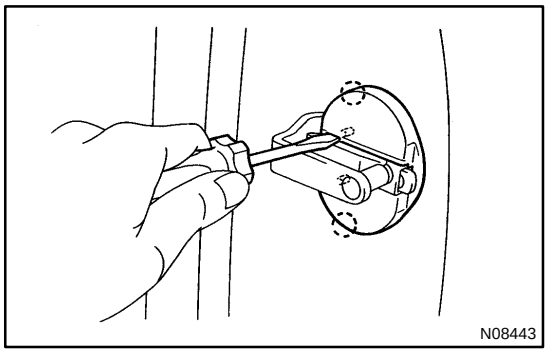

3. ADJUST DOOR LOCK STRIKER

(a) Check that the door fit and door lock linkages are adjusted correctly.

(b) Using a screwdriver, remove the striker cover.

(c) Using a torx wrench, loosen the striker mounting screws.

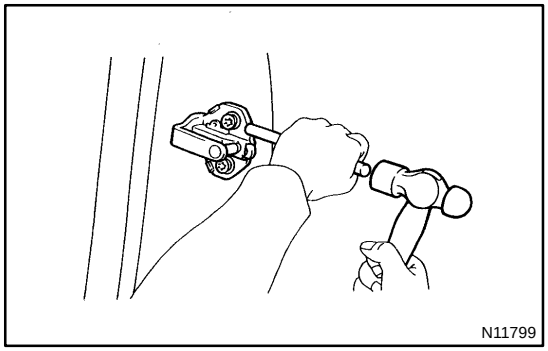

(d) Using a brass bar and hammer, tap the striker to adjust it.

CAUTION:

Do not tap the striker too hard.

4. CHECK FRONT DOOR GLASS

Check the following items. If the conditions are not met, readjust the glass.

(1) When you close the door with the glass fully closed, the A-A, B-B sections are in the same condition as shown in the illustration below.

(2) When you push the glass firmly from inside, the glass stops at the roof drip moulding and does not move.

(3) When you close the door with the glass fully closed, the glass is not caught in the outside lip of the weatherstrip and does not touch to the roof drip moulding.

(4) With the door closed, the glass moves smoothly.

(5) The upper edge of the glass cannot be seen from outside of the vehicle (edge touching roof side rail weatherstrip).

(6) While the glass is being raised, the glass and roof side rail weatherstrip are parallel, and the front and rear door window upper stops touch at the same time.

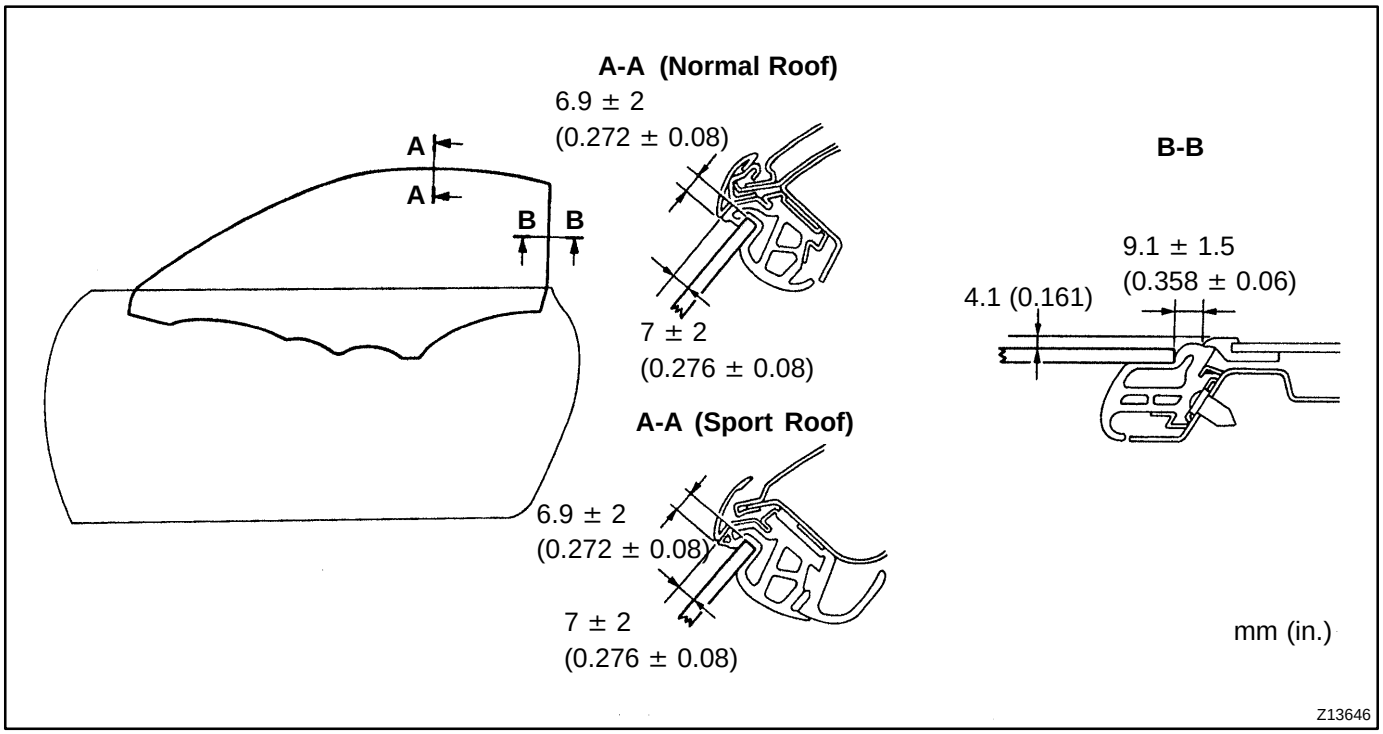

5. ADJUST FRONT DOOR GLASS

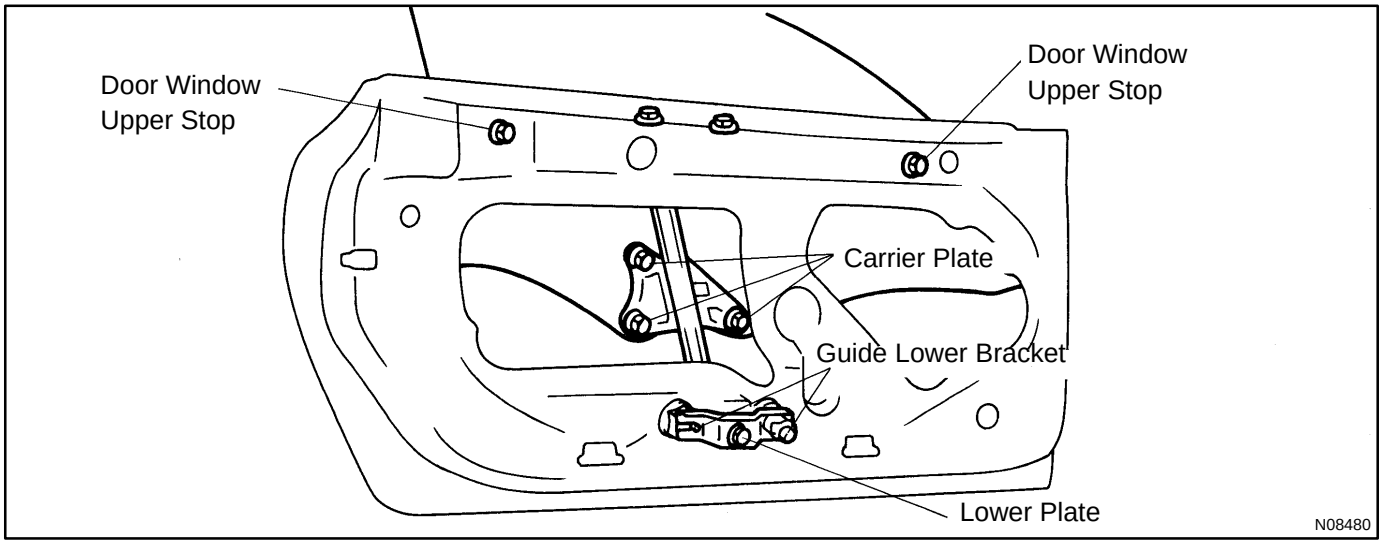

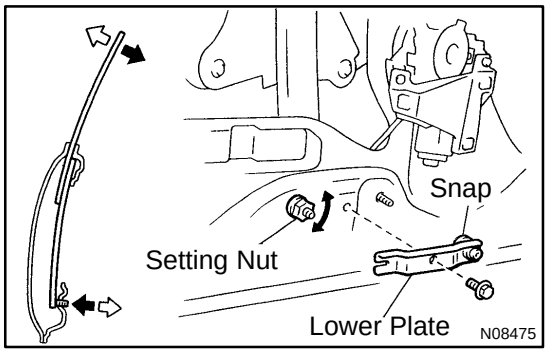

- Upper side of glass - in/out
  (1) Remove the lower plate bolt.
  (2) Pull the lower plate so that the snap is unlocked.
  (3) Remove the snap and lower plate.
  (4) Adjust the glass by turning the setting nut.
  (5) Reinstall the lower plate, snap and bolt.
  Torque: 5.4 N·m (55 kgf·cm, 48 in.·lbf)

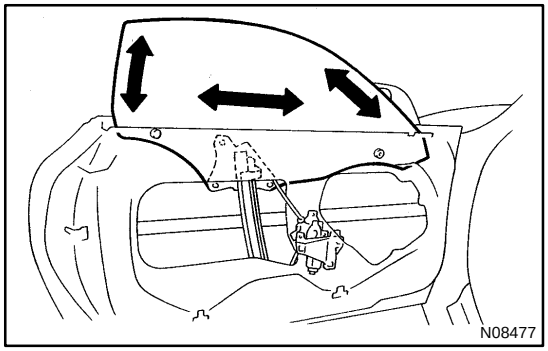

- Position (forward/rearward) the glass and attitude of glass
  Loosen the 3 bolts of the carrier plate and adjust.
  Torque: 7.4 N·m (76 kgf·cm, 67 in.·lbf)

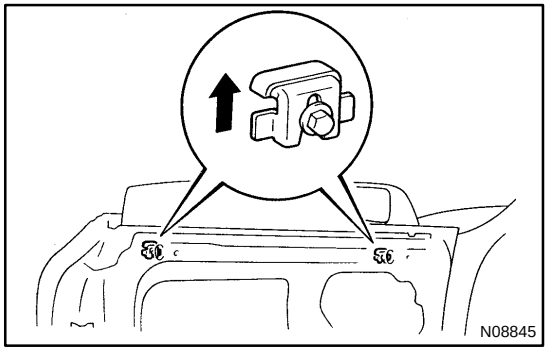

- Position (vertical) the glass and attitude of glass (when glass fully closed)
  Adjust the door window upper stop.
  Torque: 11 N·m (115 kgf·cm, 8.3 ft·lbf)

BACK DOOR

COMPONENTS

BO0QG-01

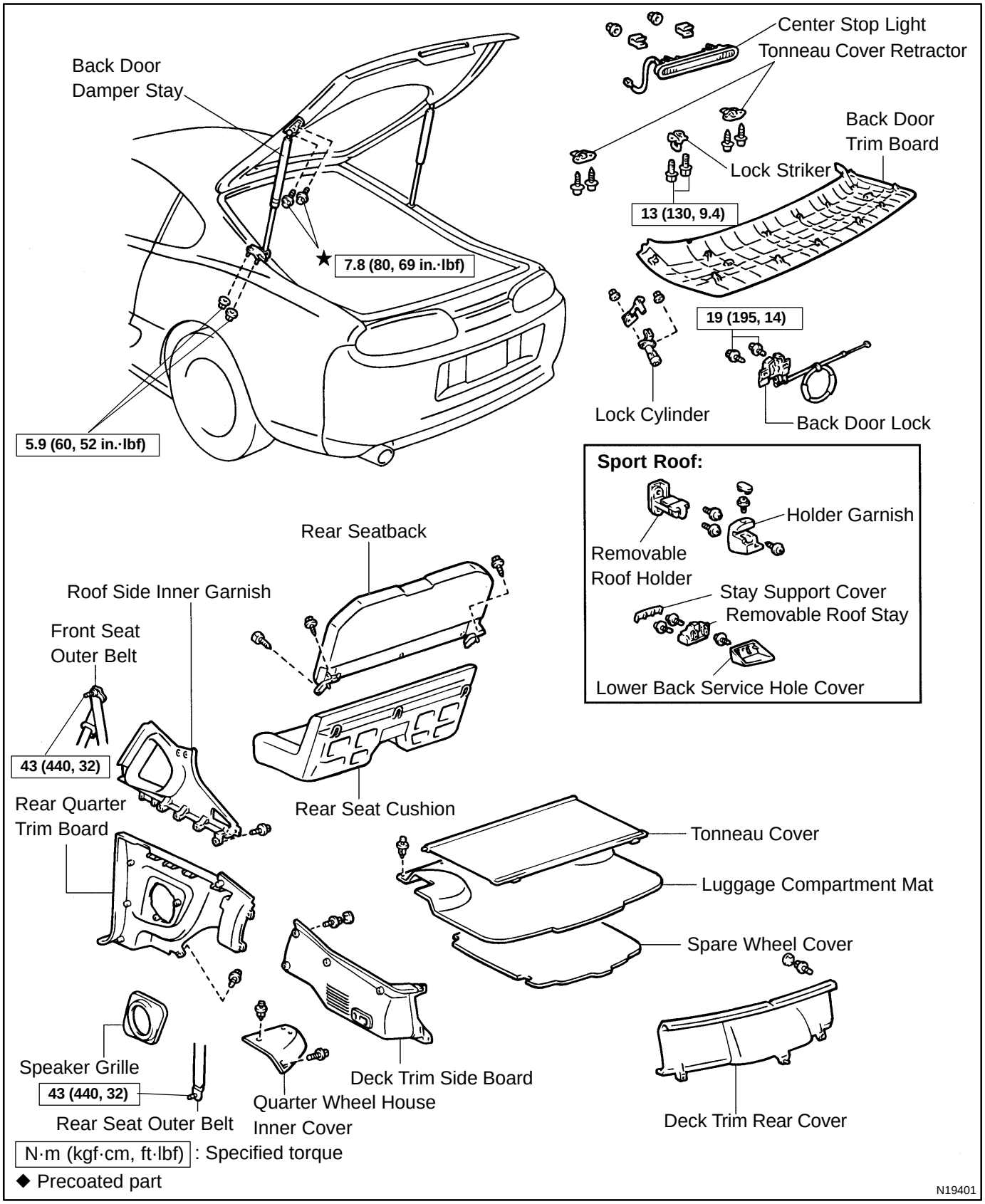

BO0QH-01

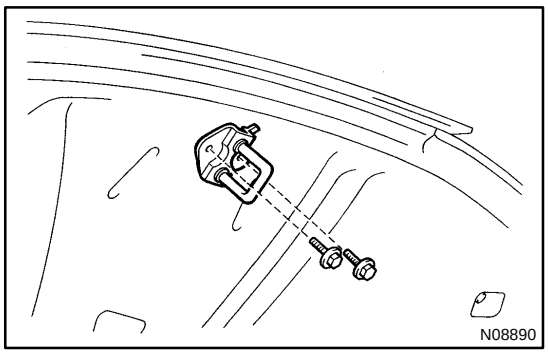

REMOVAL

1. **REMOVE BACK DOOR TRIM BOARD**
2. **REMOVE LOCK STRIKER**
   Torque: 13 N·m (130 kgf·cm, 9.4 ft·lbf)

BO0QI-01

REPLACEMENT

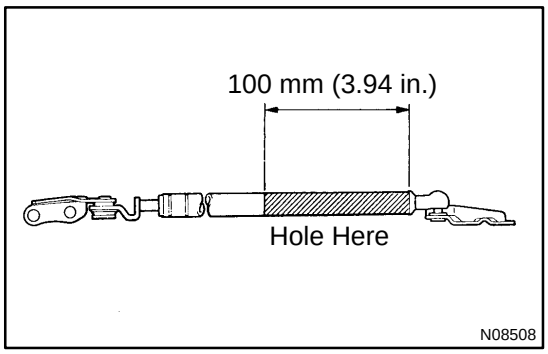

1. REMOVE ROOF SIDE INNER GARNISH
(See page BO-14)

2. REMOVE DAMPER STAY

NOTICE:

When handling the damper.

- **Do not disassemble the damper because the cylinder is filled with pressurized gas.**
- **If the damper is to be replaced, drill a 2.0 - 3.0 mm (0.079 - 0.118 in.) hole in the area shown in the illustration to completely release the high-pressure gas before disposing of it.**
- **When drilling, chips may fly out so work carefully.**
- **The gas is colorless, odorless and non-toxic.**
- **When working, handle the damper carefully. Never score or scratch the exposed part of the piston rod, and never allow paint or oil to get on it.**
- **Do not turn the piston rod and cylinder with the damper fully extended.**

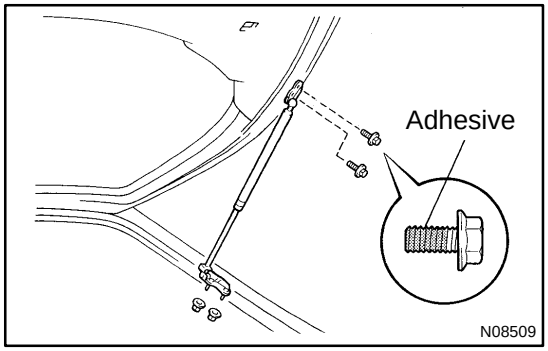

3. INSTALL DAMPER STAY

Apply adhesive to the bolts before tightening.

Part No.08833-00070, THREE BOND 1324 or equivalent.

Torque:

Bolt: 7.8 N·m (80 kgf·cm, 69 in.·lbf)

Nut: 5.9 N·m (60 kgf·cm, 52 in.·lbf)

4. INSTALL ROOF SIDE INNER GARNISH
(See page BO-14)

BO0QJ-01

ADJUSTMENT

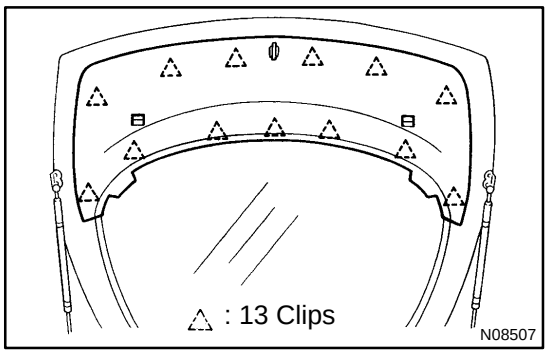

1. ADJUST DOOR IN HORIZONTAL DIRECTION

(a) Remove the back door trim board.

(b) Remove the roof headlining.
(See page BO-60)

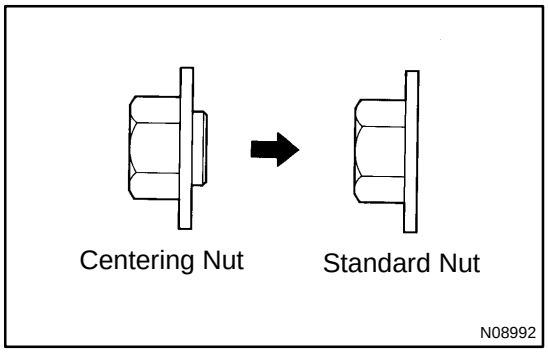

(c) Adjust the door by loosening the body side hinge nuts.
Torque: 21 N·m (210 kgf·cm, 15 ft·lbf)

HINT:
Since the centering nut is used as the back door hinge nut, the back door cannot be adjusted with it on. Substitute the standard nut for the centering nut.

(d) Reinstall the removed parts in the reverse order to their removal.

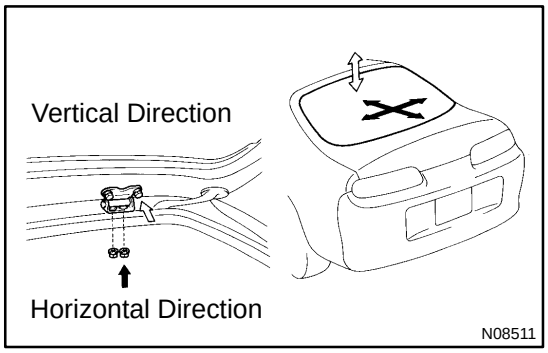

2. ADJUST DOOR IN VERTICAL DIRECTION

Adjust the door by loosening the back door side hinge bolts.
Torque: 13 N·m (130 kgf·cm, 9.4 ft·lbf)

HINT:
Substitute the standard bolt for the centering bolt.
(See page BO-6)

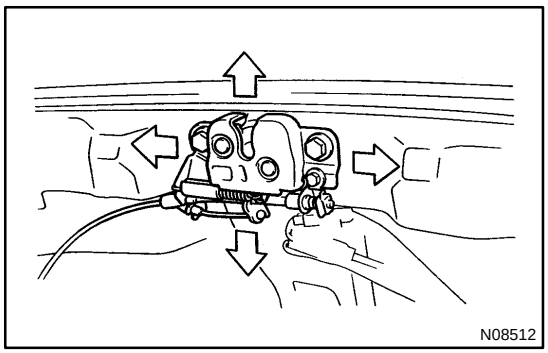

3. ADJUST DOOR LOCK

(a) Remove the clips and deck trim rear cover.

(b) Loosen the lock mounting bolts to adjust.
Torque: 19 N·m (195 kgf·cm, 14 ft·lbf)

(c) Using a brass bar and hammer, tap the lock to adjust it.

CAUTION:
Do not tap the lock too hard.
(See page BO-10)

(d) Install the deck trim rear cover.

FRONT WIPER AND WASHER

BO0QL-01

COMPONENTS

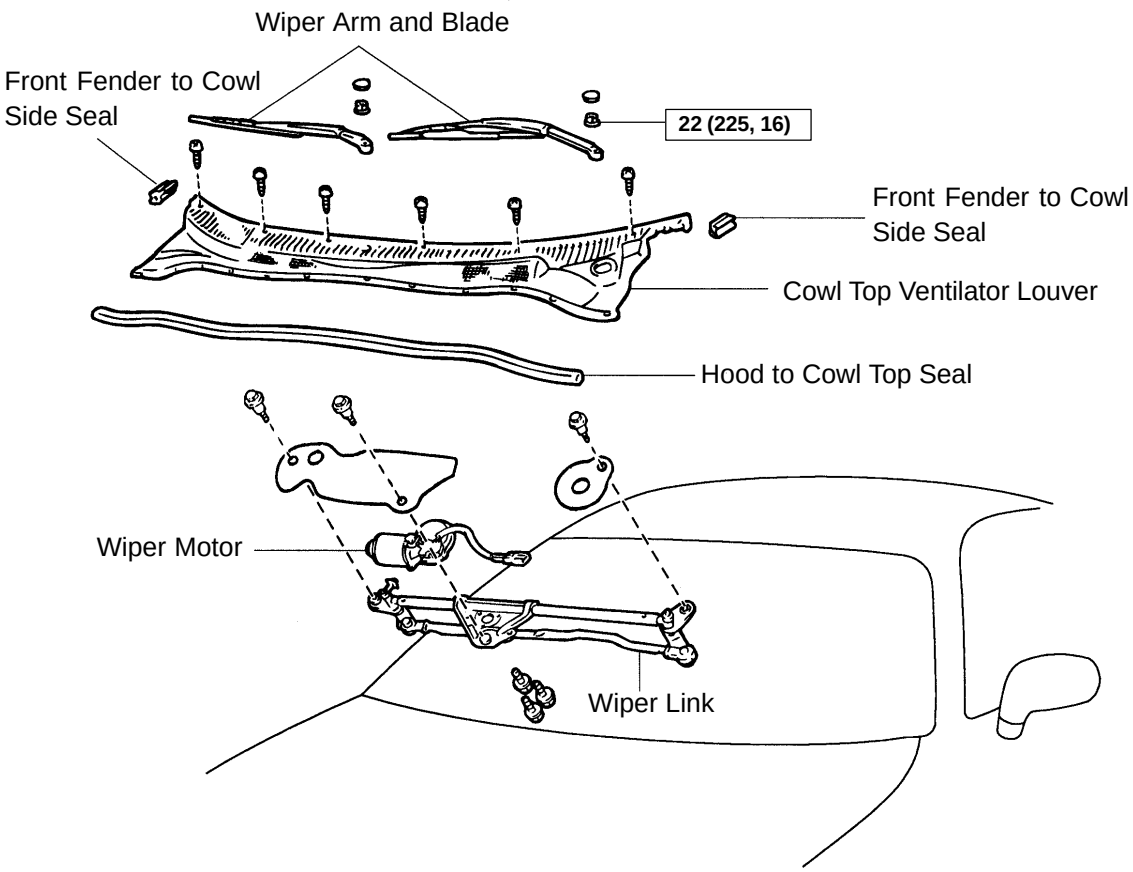

N·m (kgf·cm, ft·lbf) : Specified torque

H01888

BO0QM-01

REMOVAL

REMOVE THESE PARTS:

(a) Wiper arms and blades

(b) Cowl top ventilator louver

REMOVE FRONT WIPER MOTOR

(a) Disconnect the connector, then unfasten the 3 bolts.

(b) Remove the wiper motor with the link.

BO0QN-01

ADJUSTMENT

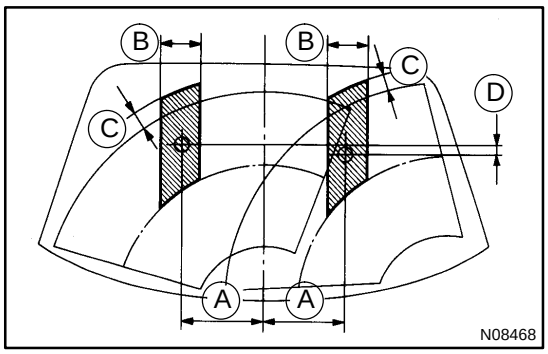

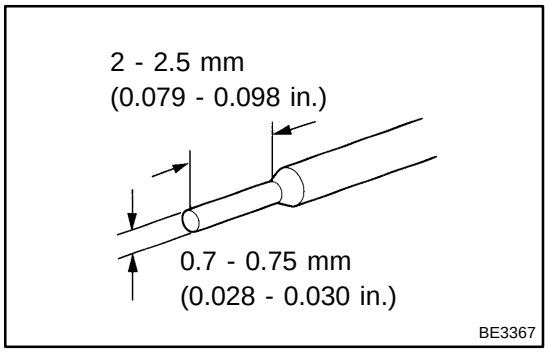

1. INSPECT FRONT WASHER NOZZLE

(a) While operating the washer, check that both the point where the washer fluid from the upper nozzles hits the windshield, and the up surge area, are within the range indicated by the hatched line.

"A": Approx. 275 mm (10.8 in.)
"B": Approx. 150 mm (5.9 in.)
"C": Approx. 50 mm (2.0 in.)
"D": Within 100 mm (3.9 in.)

(b) Ensure that the lower point where the washer fluid hits the windshield is within the range of the wiping pattern (the area of the glass which is wiped by the wiper blades).

2. ADJUST FRONT WASHER NOZZLE

Using a tool like that shown in the illustration, change the direction of the nozzle hole to adjust the point where washer fluid strikes the windshield.

BO0QO-01

INSTALLATION

1. INSTALL THESE PARTS:

(a) Wiper motor with link

(b) Cowl top ventilator louver

2. INSTALL WIPER ARM AND BLADE

(a) Install the wiper arms and operate the wipers once and turn the wiper switch OFF.

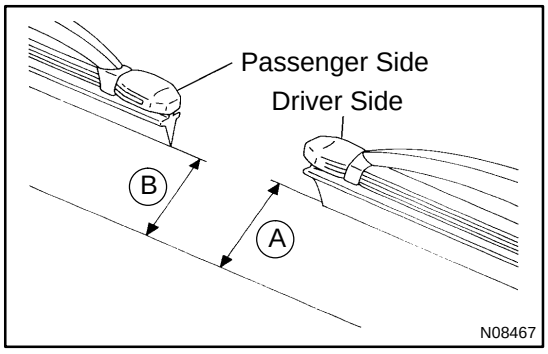

(b) Adjust the installation positions of the wiper arms to the positions as shown in the illustration.
"A": Approx. 32.4 mm (1.28 in.)
"B": Approx. 33.7 mm (1.33 in.)

(c) Torque the nuts.
Torque: 22 N·m (225 kgf·cm, 16 ft·lbf)

REAR WIPER AND WASHER

COMPONENTS

BO0QP-01

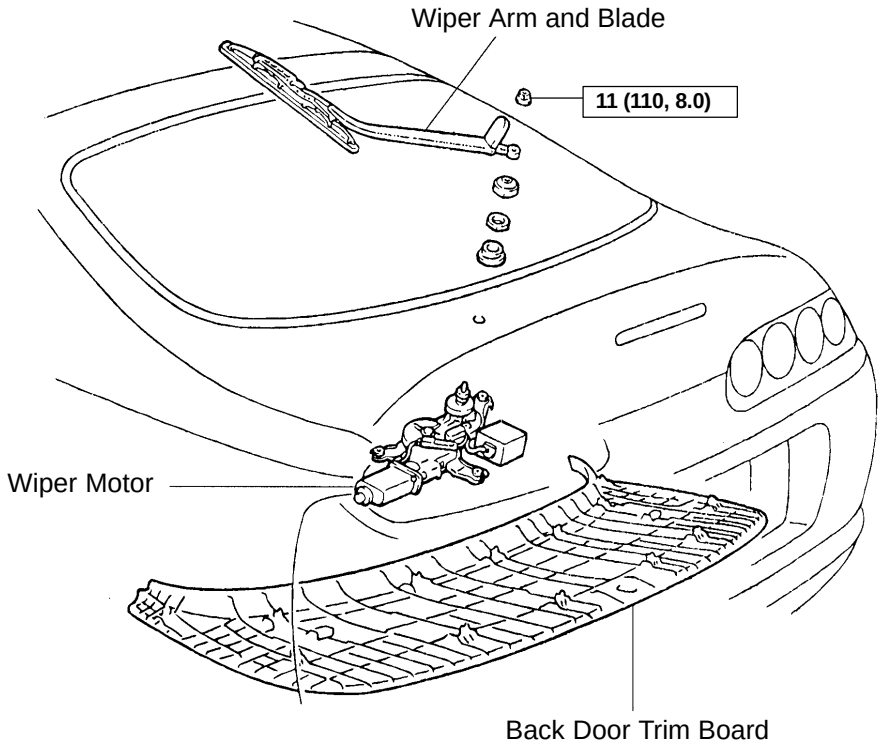

N·m (kgf·cm, ft·lbf) : Specified torque

H01889

BO0QQ-01

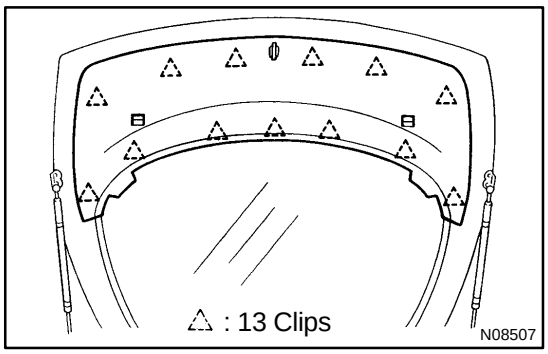

REMOVAL

1. REMOVE WIPER ARM AND BLADE

2. REMOVE BACK DOOR TRIM BOARD

3. REMOVE WIPER MOTOR ASSEMBLY

(a) Disconnect the connector, then unfasten the 3 bolts.

(b) Remove the motor.

BO0QR-01

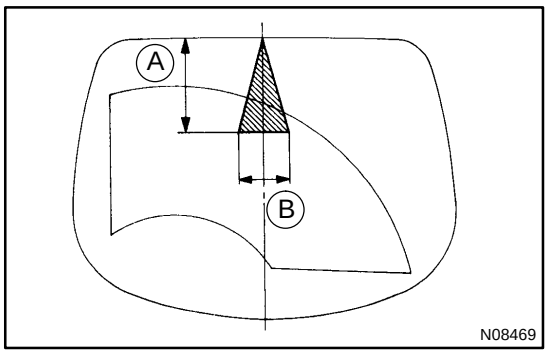

ADJUSTMENT

1. INSPECT REAR WASHER NOZZLE

While operating the washer, check that the point where the washer fluid hits the back door glass is within the range indicated by the hatched line.

”A”: Approx. 300 mm (11.8 in.)

”B”: Approx. 150 mm (5.9 in.)

2. ADJUST REAR WASHER NOZZLE

(See step 2 on page BO-21)

BO0QS-01

INSTALLATION

1. INSTALL THESE PARTS:

(a) Wiper motor

(b) Back door trim board

2. INSTALL WIPER ARM AND BLADE

(a) Install the wiper arm, then operate the wiper once and turn the wiper switch OFF.

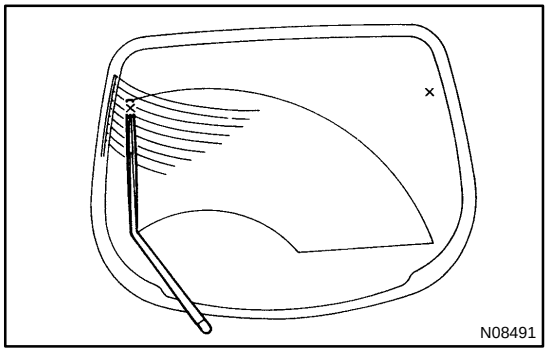

(b) Adjust the top of the wiper blade to the installation mark printed on the glass.

(c) Torque the nut.

Torque: 11 N·m (110 kgf·cm, 8.0 ft·lbf)

ROOF DRIP SIDE FINISH MOULDING

COMPONENTS

BO0QT-01

Normal Roof:

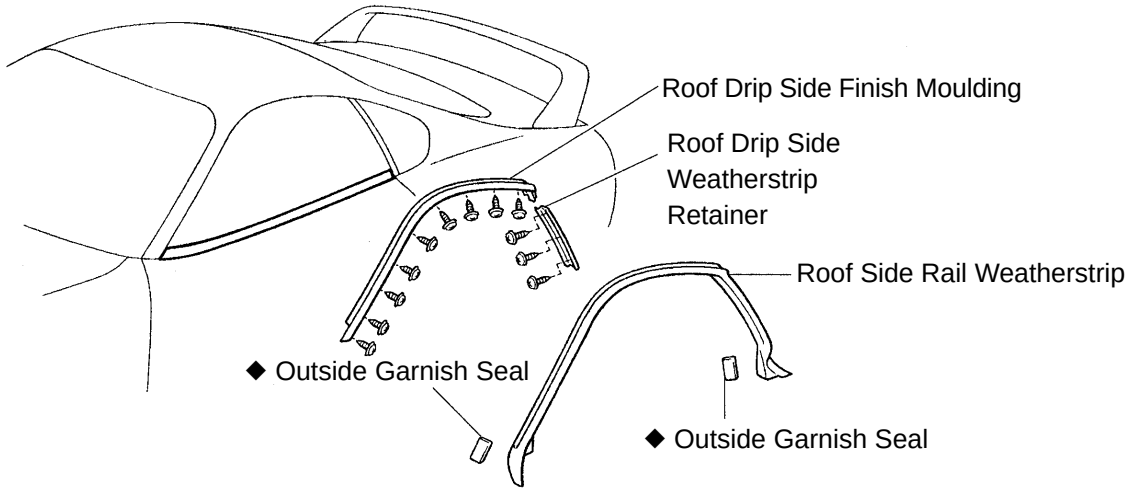

Sport Roof:

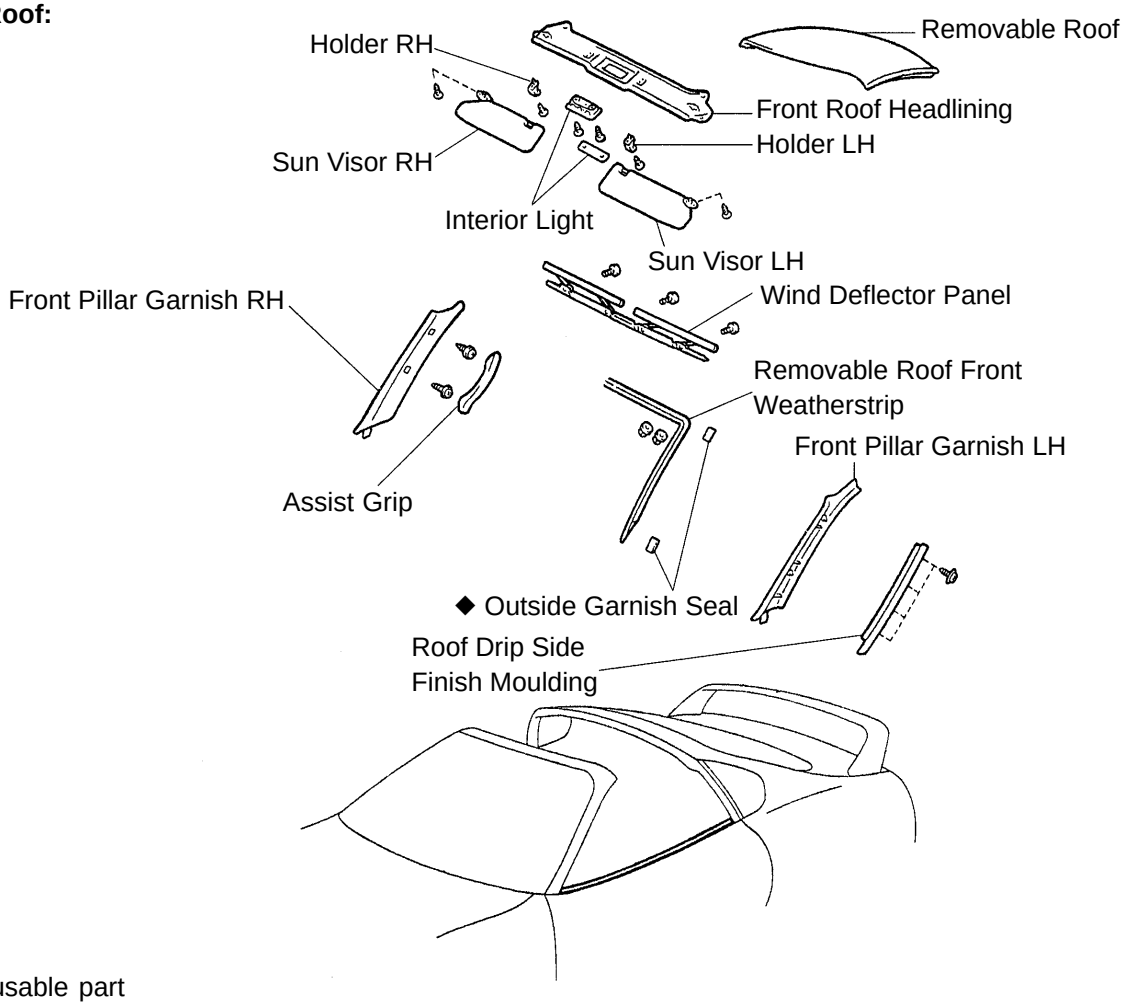

◆ Non-reusable part

N16688

BO0QU-01

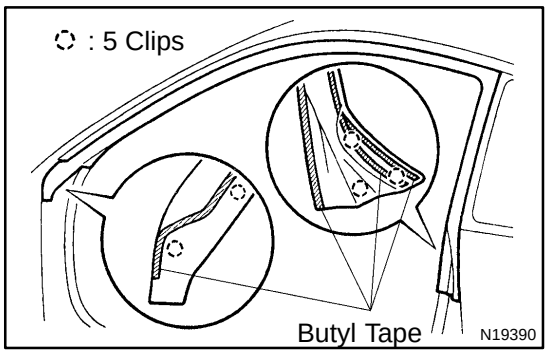

REMOVAL

1. Normal Roof:

REMOVE ROOF SIDE RAIL WEATHERSTRIP

Using a clip remover, remove the 2 clips for front and 3 clips for rear side of the weatherstrip and remove the weatherstrip.

2. Normal Roof:

REMOVE ROOF SIDE RAIL WEATHERSTRIP RETAINER

Remove the 3 screws and retainer.

3. Normal Roof:

REMOVE ROOF DRIP SIDE FINISH MOULDING

Remove the 9 screws and moulding.

4. Sports Roof:

REMOVE THESE PARTS:

(a) Removable roof

(b) Assist grip (See page BO-61)

HINT:

Tape a screwdriver tip before use.

(c) Front pillar garnishes (See page BO-61)

(d) Interior light

(e) Sun visors and holders

(f) Front roof headlining (See page BO-61)

(g) Wind deflector panel

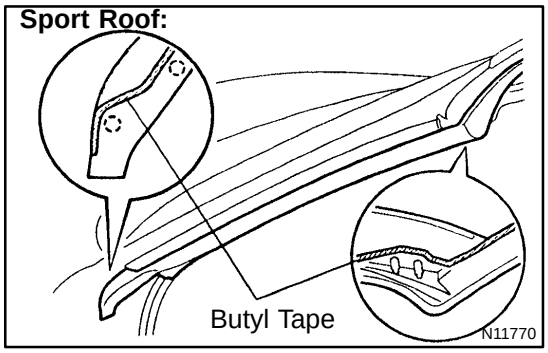

5. Sports Roof:

REMOVE REMOVABLE ROOF FRONT WEATHERSTRIP

(a) Remove the 2 nuts from the front weatherstrip.

(b) Using a clip remover, remove the 2 clips and weatherstrip.

6. Sports roof:

REMOVE ROOF DRIP SIDE FINISH MOULDING

Remove the 4 screws and moulding.

BO0QV-01

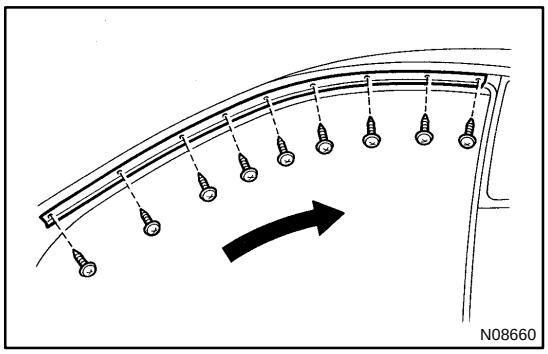

INSTALLATION

1. Normal Roof:
INSTALL ROOF DRIP SIDE FINISH MOULDING

Install the moulding with 9 screws.

HINT:

Tighten the screws from the front to rear.

2. Normal Roof:
INSTALL ROOF SIDE RAIL WEATHERSTRIP RETAINER

Install the retainer with 3 screws.

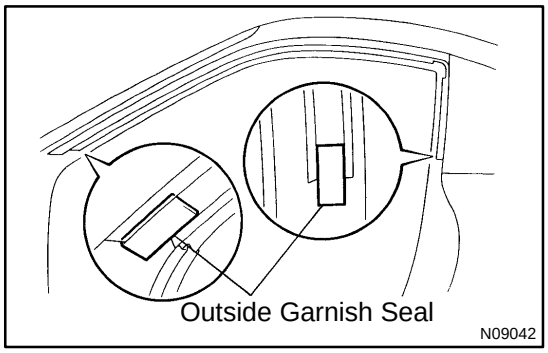

3. Normal Roof:
INSTALL OUTSIDE GARNISH SEAL

Install the garnish seal to the retainer as shown in the illustration.

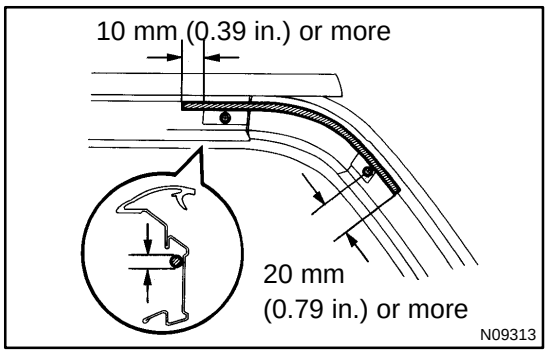

4. Normal Roof:
APPLY SEAL PACKING

Apply seal packing to the moulding and retainer as shown in the illustration.

T: 3 mm (0.12 in.) or more
Part No. 08826-00080

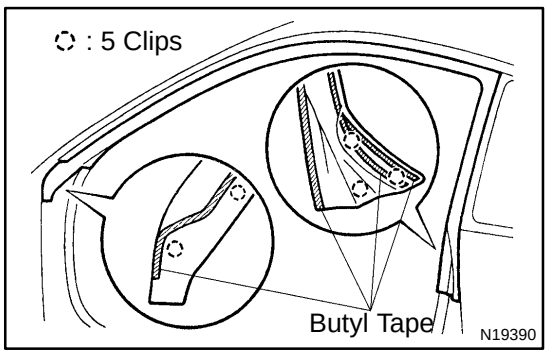

5. Normal Roof:
INSTALL ROOF SIDE RAIL WEATHERSTRIP

(a) Install the butyl tape to the weatherstrip as shown in the illustration.

(b) Install the weatherstrip.

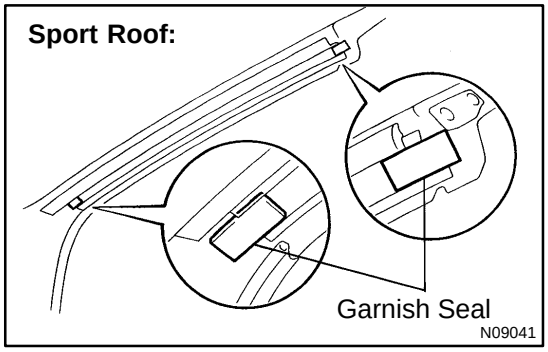

6. Sport Roof:
INSTALL ROOF DRIP SIDE FINISH MOULDING

Install the moulding with 4 screws.

HINT:

Tighten the screws from front to rear.

7. Sport Roof:
INSTALL OUTSIDE GARNISH SEAL

Install the garnish seal to the moulding as shown in the illustration.

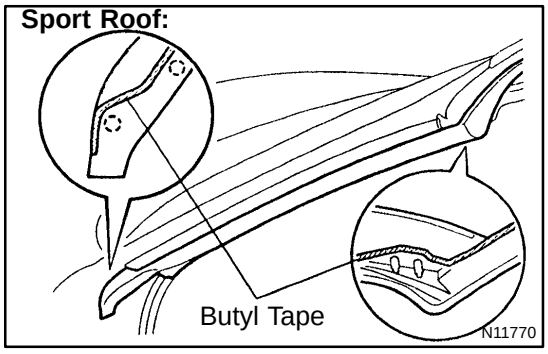

8. Sport Roof:
INSTALL REMOVABLE ROOF FRONT WEATHERSTRIP

(a) Install the butyl tape to the front weatherstrip as shown in the illustration.

(b) Install the weatherstrip.

9. Sport Roof:
INSTALL REMOVED PARTS IN REVERSE ORDER TO THEIR REMOVAL

WINDSHIELD

COMPONENTS

BO0QZ-01

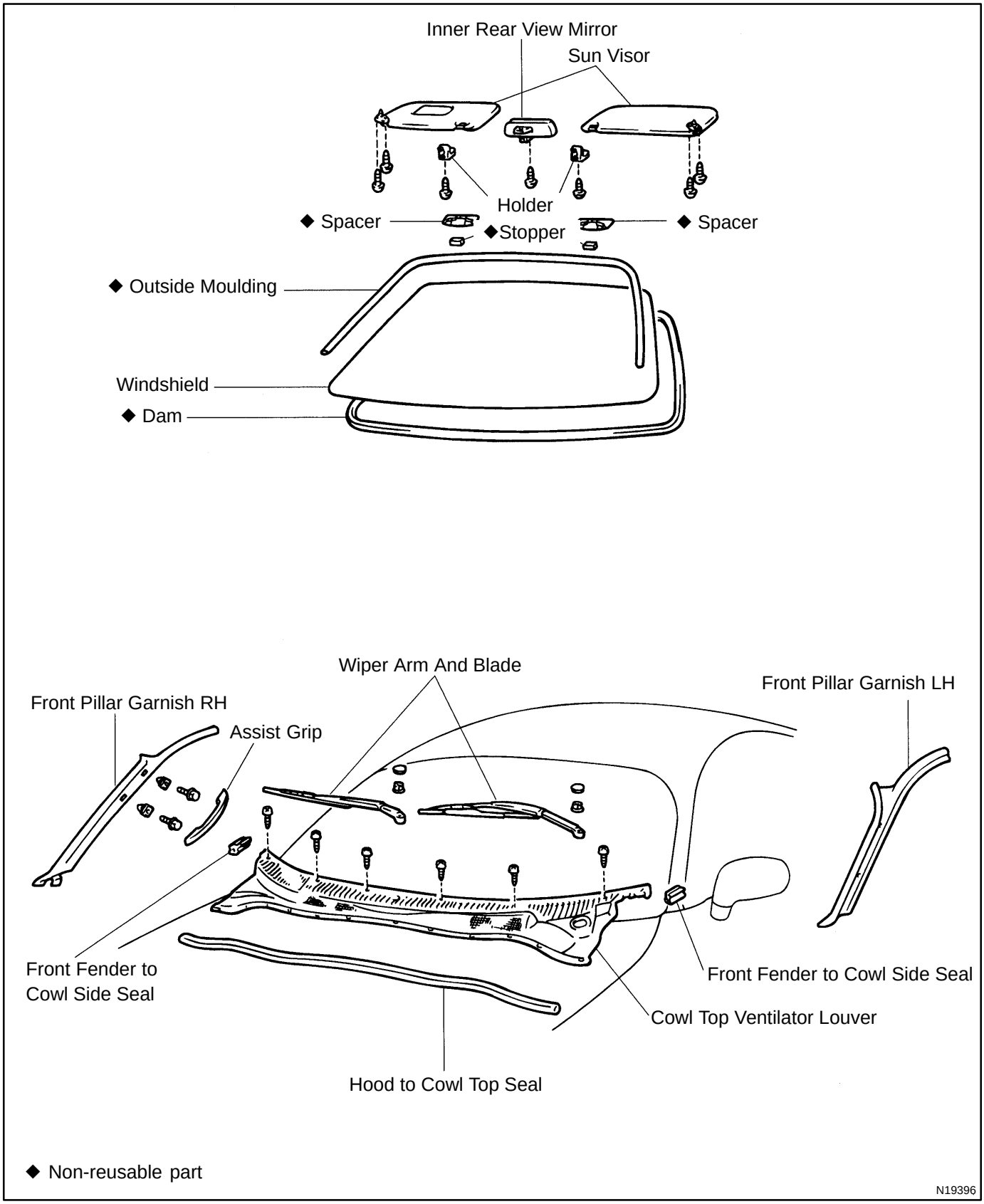

BO0R0-01

REMOVAL

1. REMOVE THESE PARTS:

(a) Inner rear view mirror

(b) Sun visors and holders

(c) Assist grip (See page BO-61)

HINT:

Tape a screwdriver tip before use.

(d) Front pillar garnishes (See page BO-61)

(e) Wiper arms and blades

(f) Cowl top ventilator louver

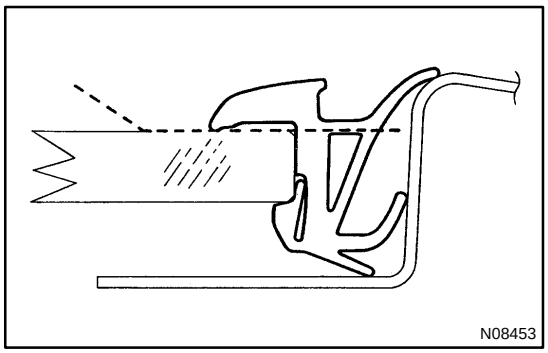

2. REMOVE WINDSHIELD MOULDING

(a) Using a knife, cut off the moulding as shown.

(b) Cut away the adhesive at the moulding installation area as much as possible.

NOTICE:

Do not damage the body with the knife.

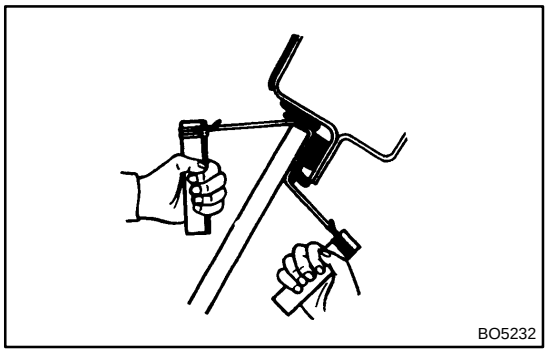

3. REMOVE WINDSHIELD GLASS

(a) Push piano wire through from the interior.

(b) Tie both wire ends to a wooden block or similar object.

HINT:

Apply adhesive tape to the outer surface of the glass to keep the surface from being scratched.

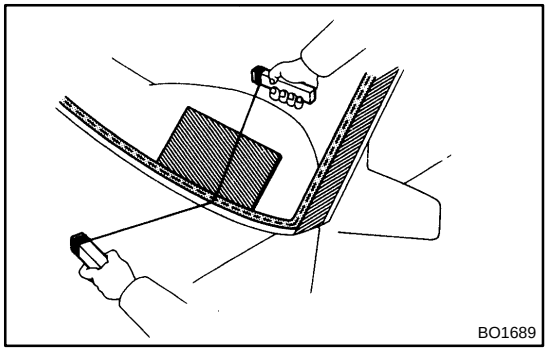

NOTICE:

When separating the glass, take care not to damage the paint and interior and exterior ornaments. To prevent scratching the instrument panel when removing the windshield, place a plastic sheet between the piano wire and instrument panel.

(c) Cut the adhesive by pulling the piano wire around it.

(d) Remove the glass.

NOTICE:

Leave as much of the adhesive on the body as possible when cutting off the glass.

BO0R1-01

INSTALLATION

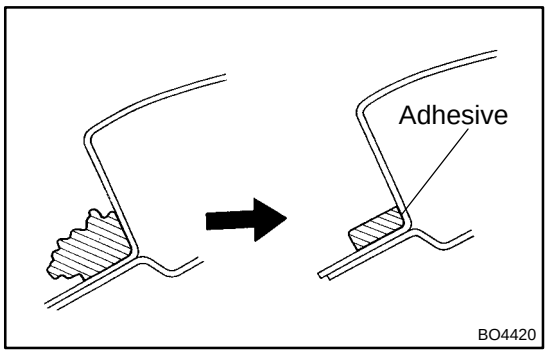

1. CLEAN AND SHAPE CONTACT SURFACE OF BODY

(a) Using a knife, cut away any rough areas on the body.

HINT:

Leave as much of the adhesive on the body as possible.

(b) Clean the cutting surface of the adhesive with a piece of shop rag saturated in cleaner.

HINT:

Even if all the adhesive has been removed, clean the body.

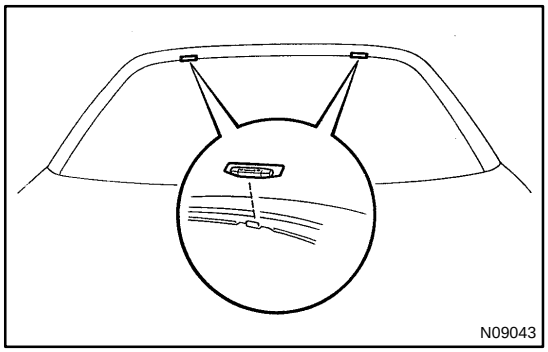

2. INSTALL SPACERS

Install the spacers to the body as shown in the illustration.

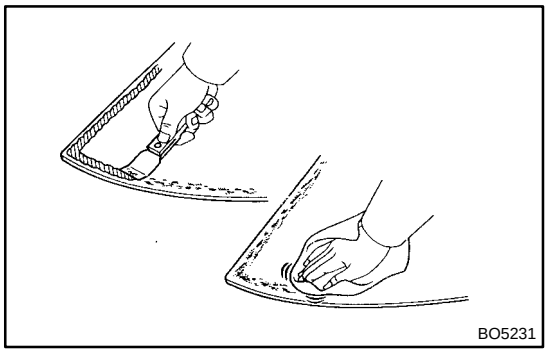

3. CLEAN REMOVED GLASS

(a) Using a scraper, remove the adhesive sticking to the glass.

(b) Using a cleaner, clean the contact surface black-colored area around the entire glass rim.

NOTICE:

Do not touch the glass after cleaning it.

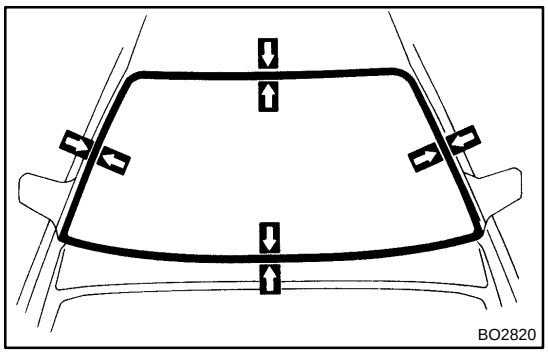

4. POSITION GLASS

(a) Place glass in correct position.

(b) Check that all contacting parts of the glass rim are perfectly even and do not make contact with the fasteners.

(c) Place reference marks between the glass and body.

(d) Remove the glass.

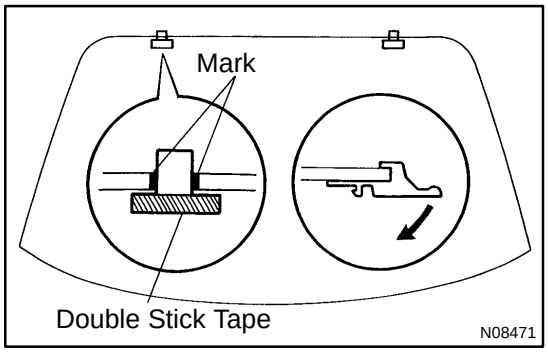

5. INSTALL STOPPERS

(a) Remove adhesive cover from stopper.

(b) Position the stopper on the edge of the glass as shown on the illustration.

(c) Break in the protruding part of the stopper.

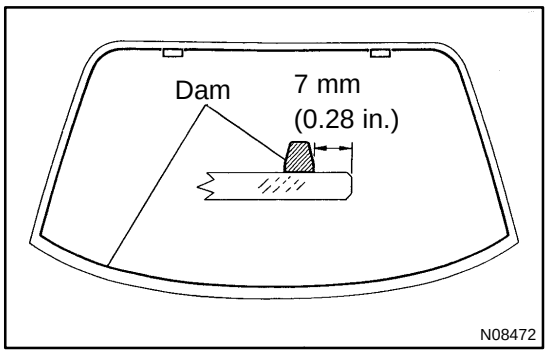

6. INSTALL DAM

Install the dam with double-stick tape all the way around the glass except where the stoppers are installed as shown in the illustration.

NOTICE:

Do not touch the glass face after cleaning it.

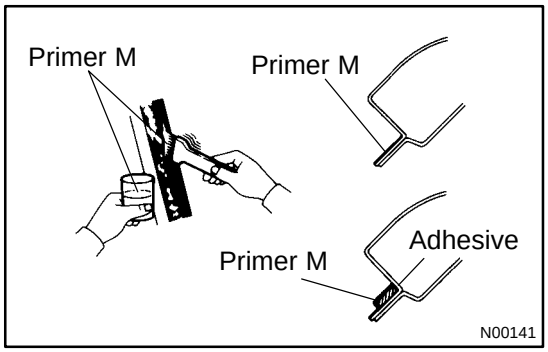

7. COAT CONTACT SURFACE OF BODY WITH PRIMER "M"

Using a brush, coat the contact surface on the body with Primer "M".

NOTICE:

- **Let the primer coating dry for 3 minutes or more.**
- **Do not keep any of the opened primer "M" and "G" for later use.**

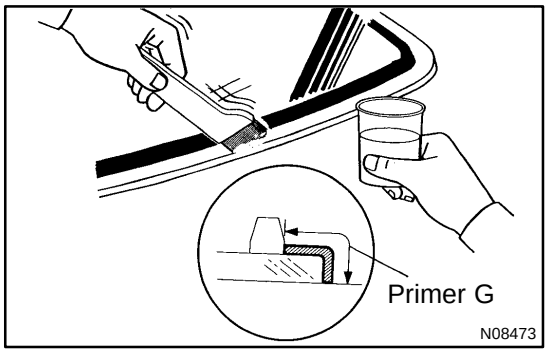

8. COAT CONTACT SURFACE OF GLASS WITH PRIMER "G"

(a) Using a brush or sponge, coat the edge of the glass and the contact surface with Primer "G".

(b) Before the Primer dries, wipe it off with a clean shop rag.

NOTICE:

Let the primer coating dry for 3 minutes or more.

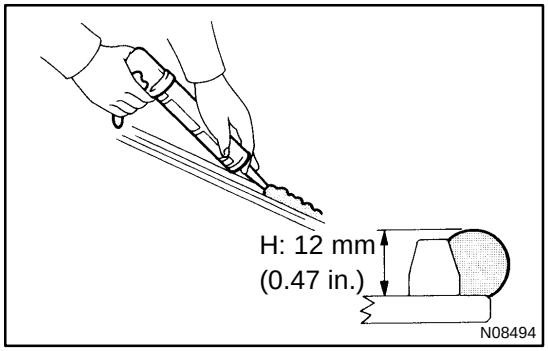

9. APPLY ADHESIVE

(a) Cut off the tip of the cartridge nozzle.

Part No. 08850-00801 or equivalent

HINT:

After cutting off the tip, use all adhesive within the time described in the chart below.

Temperature	Tackfree time
35 ˚C (95 ˚F)	15 minute
20 ˚C (68 ˚F)	100 minute
5 ˚C (41 ˚F)	8 hour

(b) Load the cartridge into the sealer gun.

(c) Coat the glass with adhesive as shown.

H: 12 mm (0.47 in.)

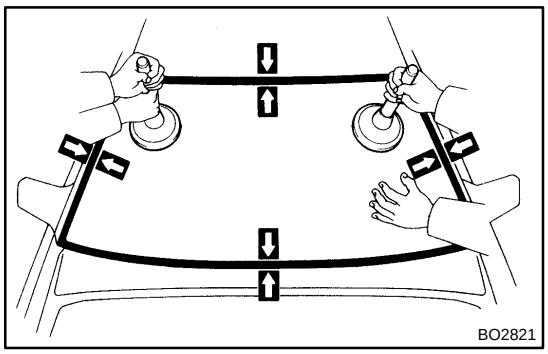

10. INSTALL GLASS

(a) Position the glass so that the reference marks are lined up, and press in gently along the rim.

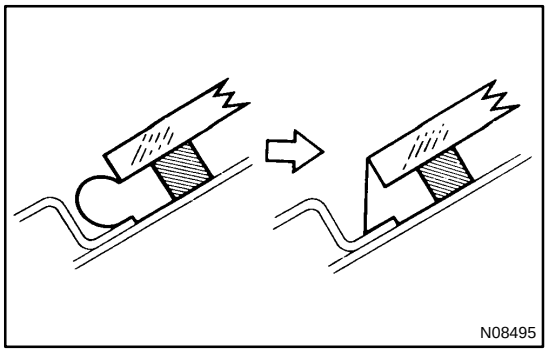

(b) Using a spatula, apply adhesive on the glass rim.

HINT:

Confirm that the dam is attached to the body panel as shown in the illustration.

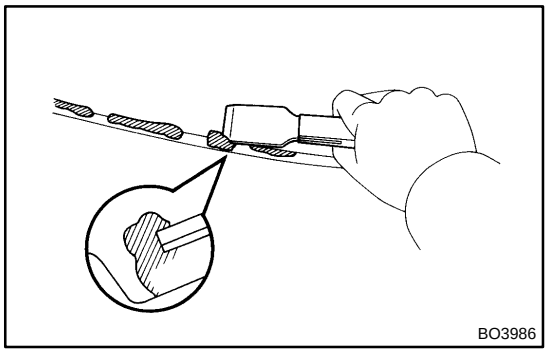

(c) Use a scraper to remove any excess or protruding adhesive.

(d) Hold the windshield glass in place securely with a protective tape or equivalent until the adhesive hardened.

NOTICE:

Take care not to drive the vehicle during the time described in the chart below.

Temperature	Minimum time prior to drive the vehicle
35 ˚C (95 ˚F)	1..5 hour
20 ˚C (68 ˚F)	5 hour
5 ˚C (41 ˚F)	24 hour

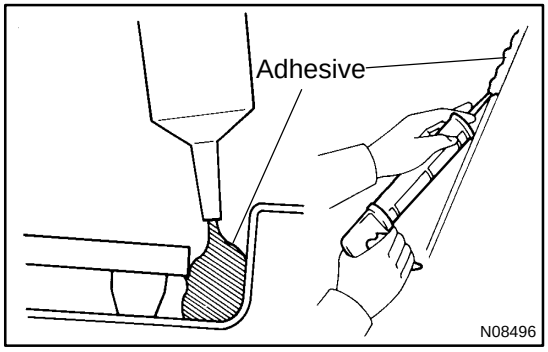

11. APPLY ADHESIVE AT MOULDING INSTALLATION AREA

Coat the glass with adhesive at the moulding installation area.

Part No. 08833-00030

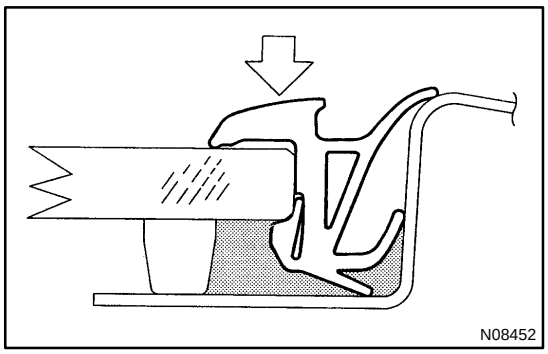

12. INSTALL WINDSHIELD MOULDING

Place the moulding onto the body and tap it by hand.

13. INSPECT FOR LEAKS AND REPAIR

(a) Do a leak test after the hardening time has elapsed.

(b) Seal any leak with auto glass sealer.
Part No. 08833-00030 or equivalent

14. INSTALL THESE PARTS:

(a) Cowl top ventilator louver

(b) Wiper arms and blades
Torque: 22 N·m (225 kgf·cm, 16 ft·lbf)

(c) Front pillar garnishes

(d) Assist grip

(e) Sun visors and holders

(f) Inner rear view mirror

QUARTER WINDOW GLASS

BO0R2-01

COMPONENTS

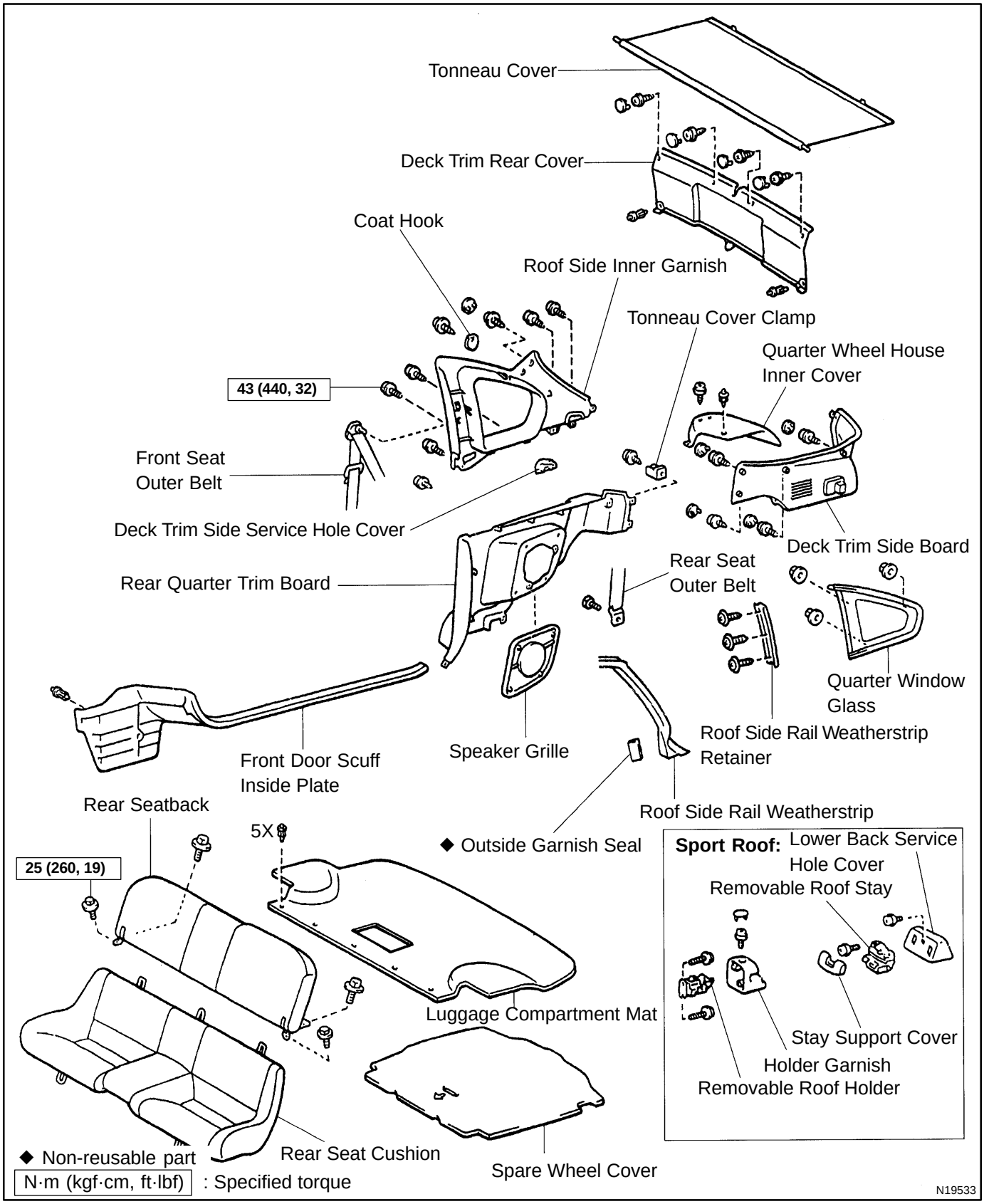

BO0R3-01

REMOVAL

1. REMOVE THESE PARTS:
(See pages BO-61)

(a) Tonneau cover
(b) Luggage compartment mat
(c) Spare wheel cover
(d) Rear seatback
Torque: 25 N·m (260 kgf·cm, 19 ft·lbf)
(e) Removable roof stay RH and LH (Sport roof)
(f) Deck trim rear cover
(g) Removable roof holder (Sport roof)
(h) Quarter wheel house inner cover
(i) Speaker grille
(j) Deck trim side board
(k) Front door scuff inside plate
(l) Rear quarter trim board
(m) Front seat outer belt shoulder anchor
Torque: 43 N·m (440 kgf·cm, 32 ft·lbf)
(n) Rear seat outer belt floor anchor
Torque: 43 N·m (440 kgf·cm, 32 ft·lbf)
(o) Roof side inner garnish
(p) Rear roof headlining (Sport roof)

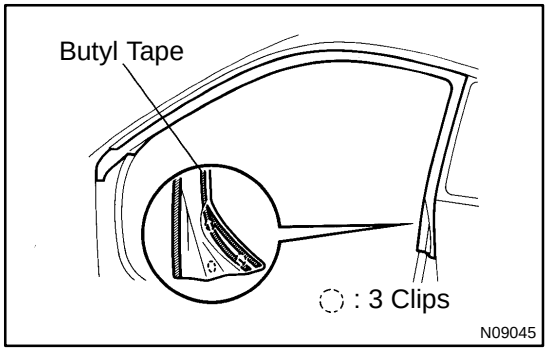

2. REMOVE ROOF SIDE RAIL WEATHERSTRIP

(a) Using a clip remover, remove the 3 clips from the rear side of the weatherstrip.
(b) Remove the rear side of the weatherstrip from the retainer.

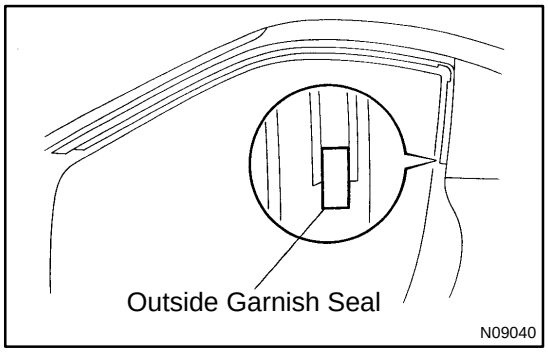

3. REMOVE ROOF SIDE RAIL WEATHERSTRIP RETAINER

Remove the outside garnish seal and retainer.

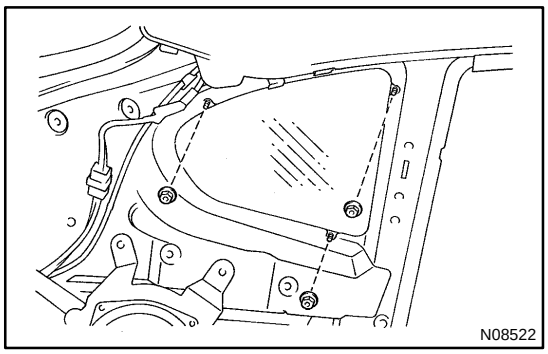

4. REMOVE QUARTER WINDOW GLASS

(a) Remove the 3 nuts.

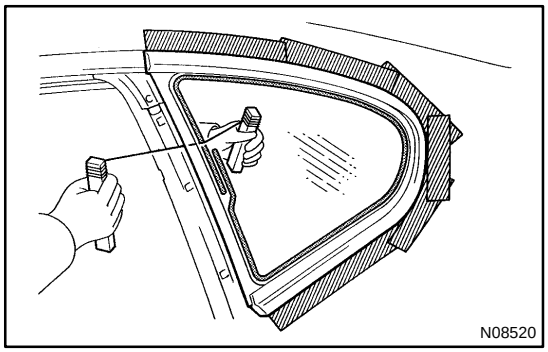

(b) Push piano wire through from the interior.

(c) Tie both wire ends to a wooden block or similar object.

HINT:

Apply adhesive tape to the outer surface to keep the surface from being scratched.

NOTICE:

When separating the glass, take care not to damage the paint and exterior.

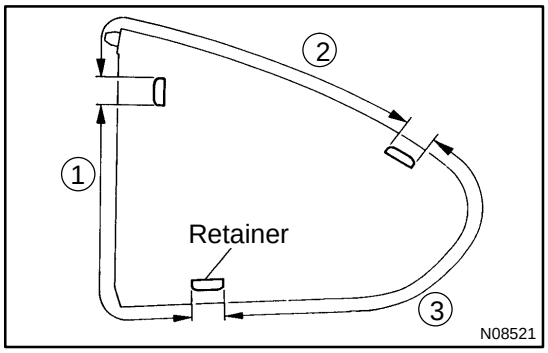

(d) Cut the adhesive by pulling the piano wire around it.

HINT:

Cut the adhesive areas in the order as shown in the illustration, so leave the adhesive where the glass retainer stays.

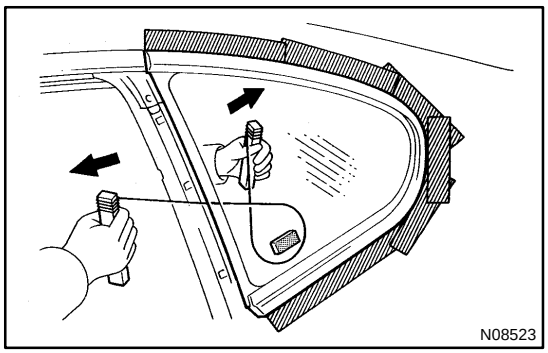

(e) Let the piano wire pass as shown on the illustration, cut off the adhered part to the pin.

NOTICE:

Do not damage the glass retainers.

(f) Remove the glass.

NOTICE:

Leave as much of the adhesive on the body as possible when cutting off the glass.

BO0R4-01

INSTALLATION

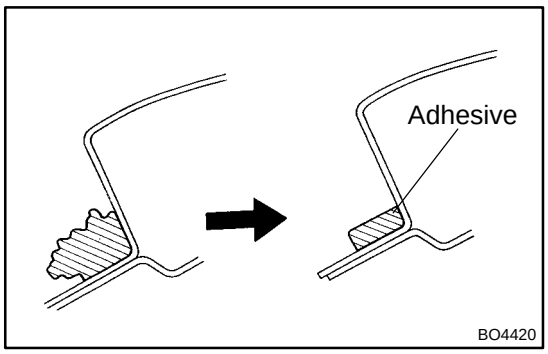

1. CLEAN AND SHAPE CONTACT SURFACE OF BODY

(a) Using a knife, cut away any rough areas on the body.

HINT:

Leave as much of the adhesive on the body as possible.

(b) Clean the cutting surface of the adhesive with a piece of shop rag saturated in cleaner.

HINT:

Even if all the adhesive has been removed, clean the body.

2. CLEAN REMOVED GLASS

(a) Using a scraper, remove the adhesive sticking to the glass.

(b) Clean the glass with cleaner.

NOTICE:

Do not touch the glass after cleaning it.

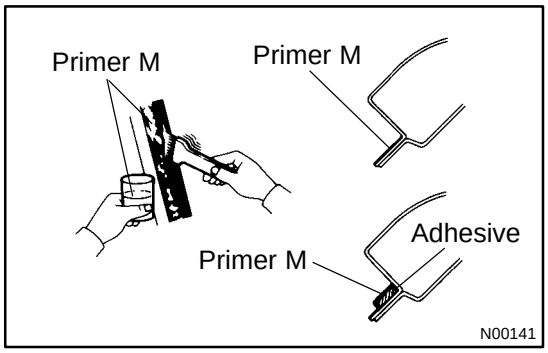

3. COAT CONTACT SURFACE OF BODY WITH PRIMER "M"

Using a brush, coat the contact surface on the body with Primer M.

NOTICE:

- **Let the primer coating dry for 3 minutes or more.**
- **Do not coat primer M to the adhesive.**
- **Do not keep any of the opened primer M for later use.**

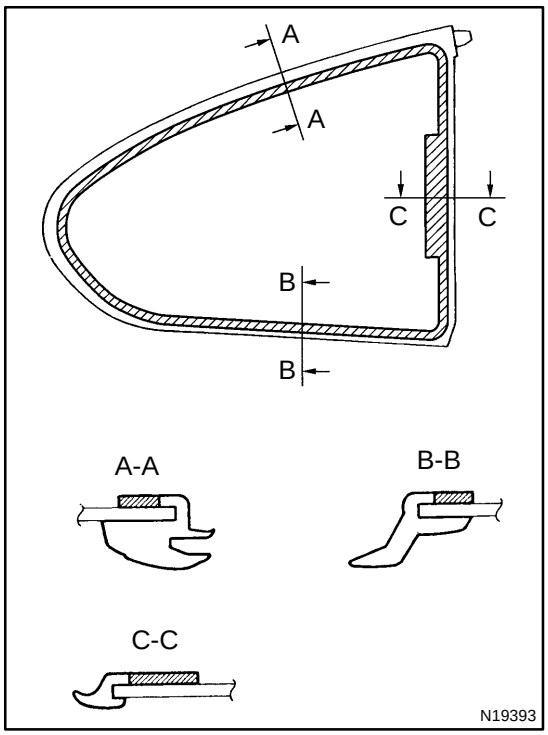

4. COAT CONTACT SURFACE OF GLASS WITH PRIMER "G"

(a) Using a brush or sponge, coat the edge of the glass and the contact surface with Primer G.

(b) Before the primer dries, wipe it off with a clean shop rag.

NOTICE:

- **Let the primer coating dry for 3 minutes or more.**
- **Do not keep any of the opened primer G for later use.**

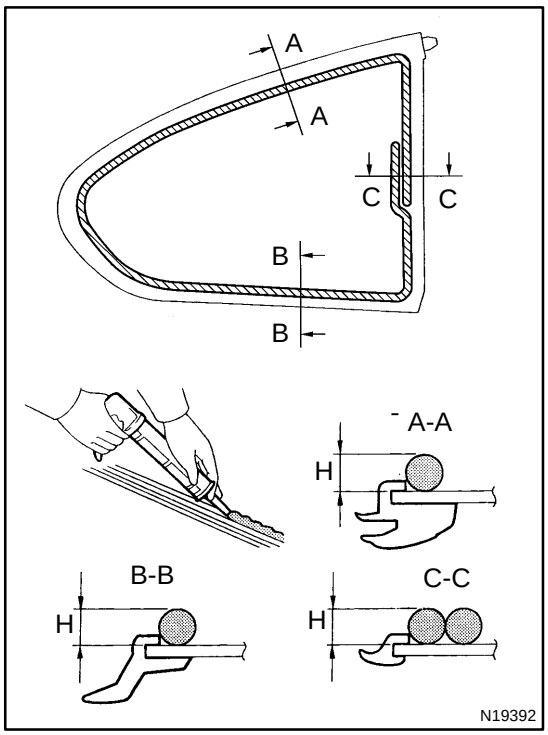

5. APPLY ADHESIVE

(a) Cut off the tip of the cartridge nozzle.
Part No. 08850-00801 or equivalent

HINT:
After cutting off the tip, use all adhesive within the time described in the table below.

Temperature	Tackfree time
35 ˚C (95 ˚F)	15 minute
20 ˚C (68 ˚F)	100 minute
5 ˚C (41 ˚F)	8 hour

(b) Load the cartridge into the sealer gun.
(c) Coat the glass with adhesive as shown.
H: 12 mm (0.47 in.)

6. INSTALL QUARTER WINDOW GLASS

(a) Install the 3 nuts and glass to the body.

7. INSPECT FOR LEAKS AND REPAIR

(a) Perform a leak test after the hardening time has elapsed.
(b) Seal any leak with sealant.
Part No. 08833-00030 or equivalent

8. INSTALL REMOVED PARTS IN REVERSE ORDER TO REMOVAL ORDER

BACK DOOR GLASS

COMPONENTS

BO0QW-01

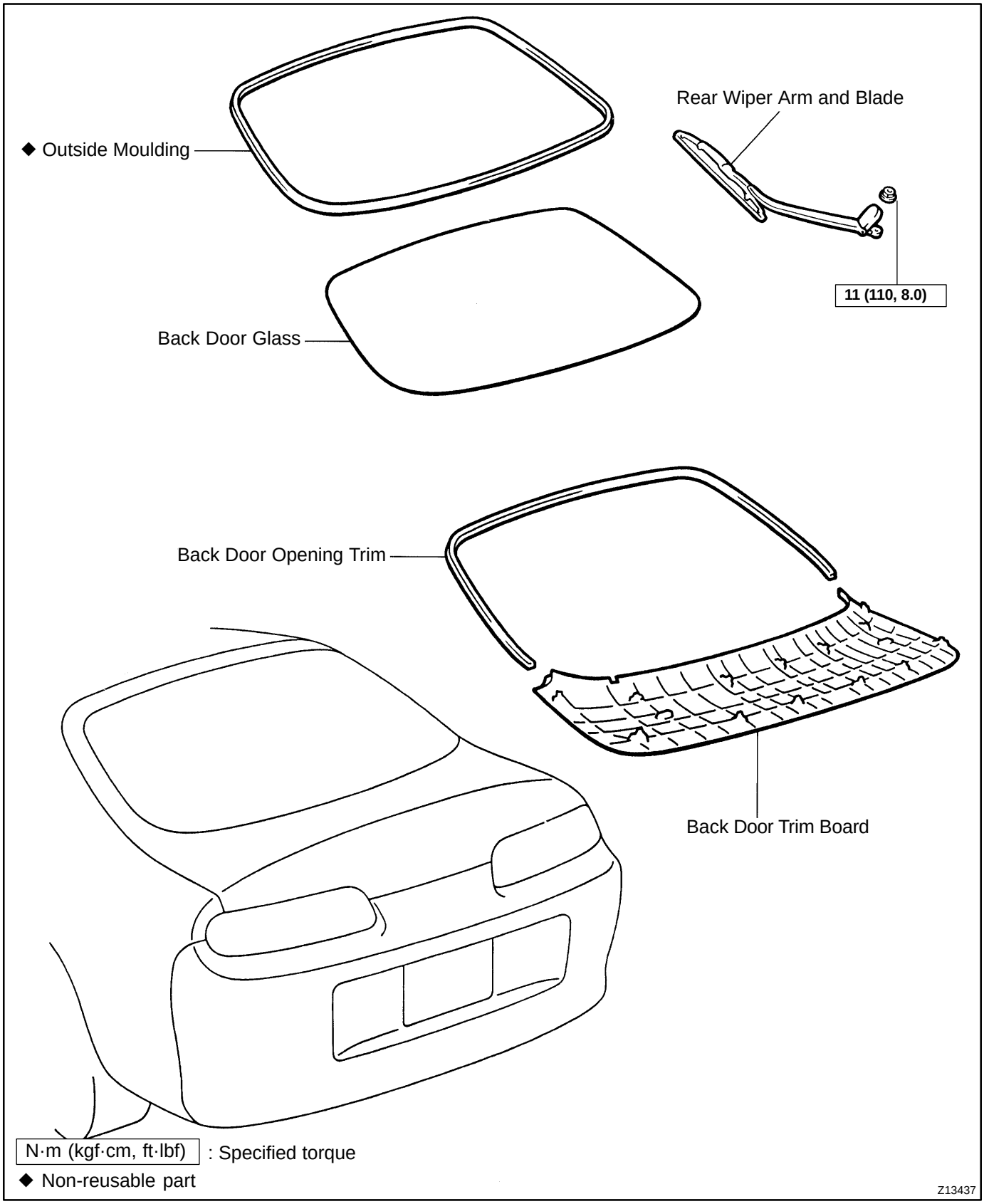

BO0QX-01

REMOVAL

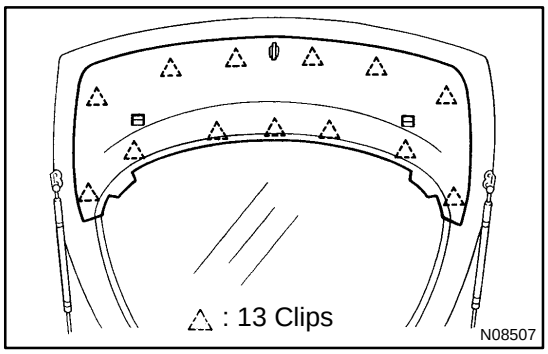

1. DISCONNECT DEFOGGER CONNECTOR

2. REMOVE THESE PARTS:

(a) Rear wiper arm and blade

(b) Back door trim board

(c) Back door opening trim

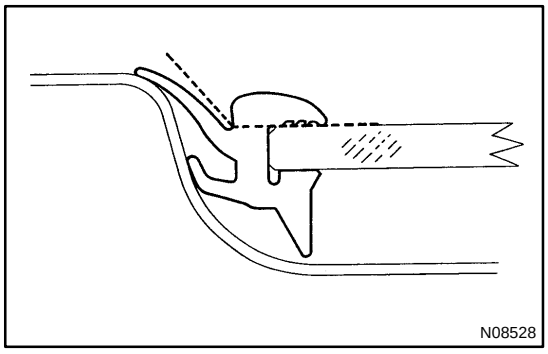

3. REMOVE BACK DOOR MOULDING

Using a knife, cut off the moulding as shown.

NOTICE:

Do not damage the body with the knife.

4. REMOVE BACK DOOR GLASS

HINT:

Remove the glass in the same manner as the windshield.

(See page BO-32)

BO0QY-01

INSTALLATION

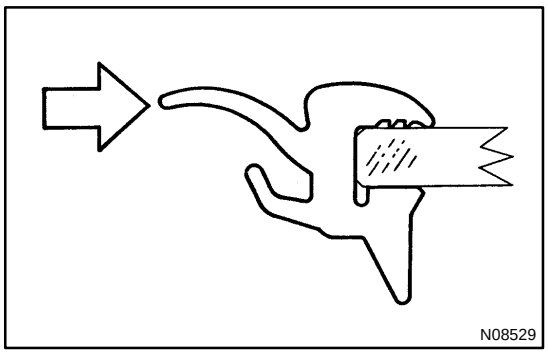

HINT:

Refer to the installation of the windshield, install the back window glass by the following operations.

1. INSTALL BACK DOOR MOULDING

Place the moulding around the glass and install it by hand.

HINT:

Always remove the back door glass to install the moulding.

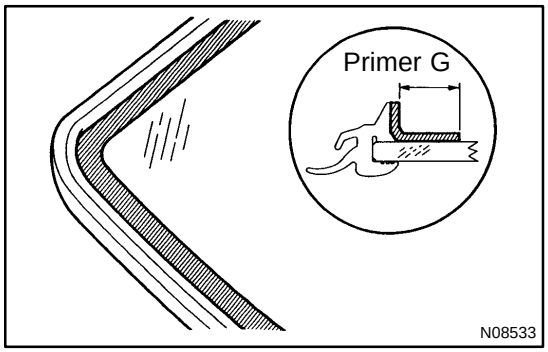

2. INSTALL BACK DOOR GLASS

(a) Coat contact surface of the glass with primer ”G”.

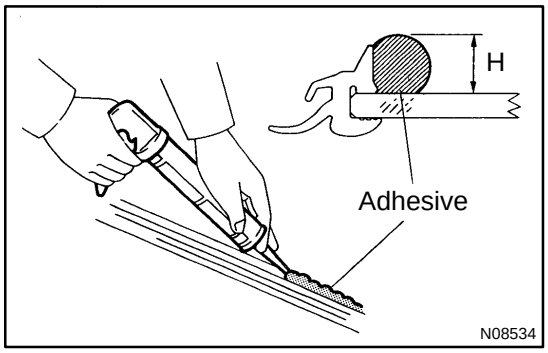

(b) Apply adhesive.
H: 12 mm (0.47 in.)

3. INSTALL THESE PARTS:

(a) Back door opening trim
(b) Back door trim board
(c) Rear wiper arm and blade
Torque: 11 N·m (110 kgf·cm, 8.0 ft·lbf)

4. CONNECT DEFOGGER CONNECTOR

SPORT ROOF

BO0R5-01

ON-VEHICLE INSPECTION

INSPECT REMOVABLE ROOF PANEL ALIGNMENT

(a) With the removable roof installed, check for water leakage.

(b) Check for a difference in clearance and level between the removable roof panel and roof panel.

Clearance:

Front side: 6.0±1.5 mm (0.236±0.06 in.)

Rear side: 6.0±1.5 mm (0.236±0.06 in.)

Level: (Rear side)

RH/LH side: +1.5 ~ -2.0 mm (+ 0.06 ~-0.08 in.)

Center: +1.0 ~ -2.0 mm (+0.04 ~ -0.08 in.)

Zero level : upper surface of roof panel

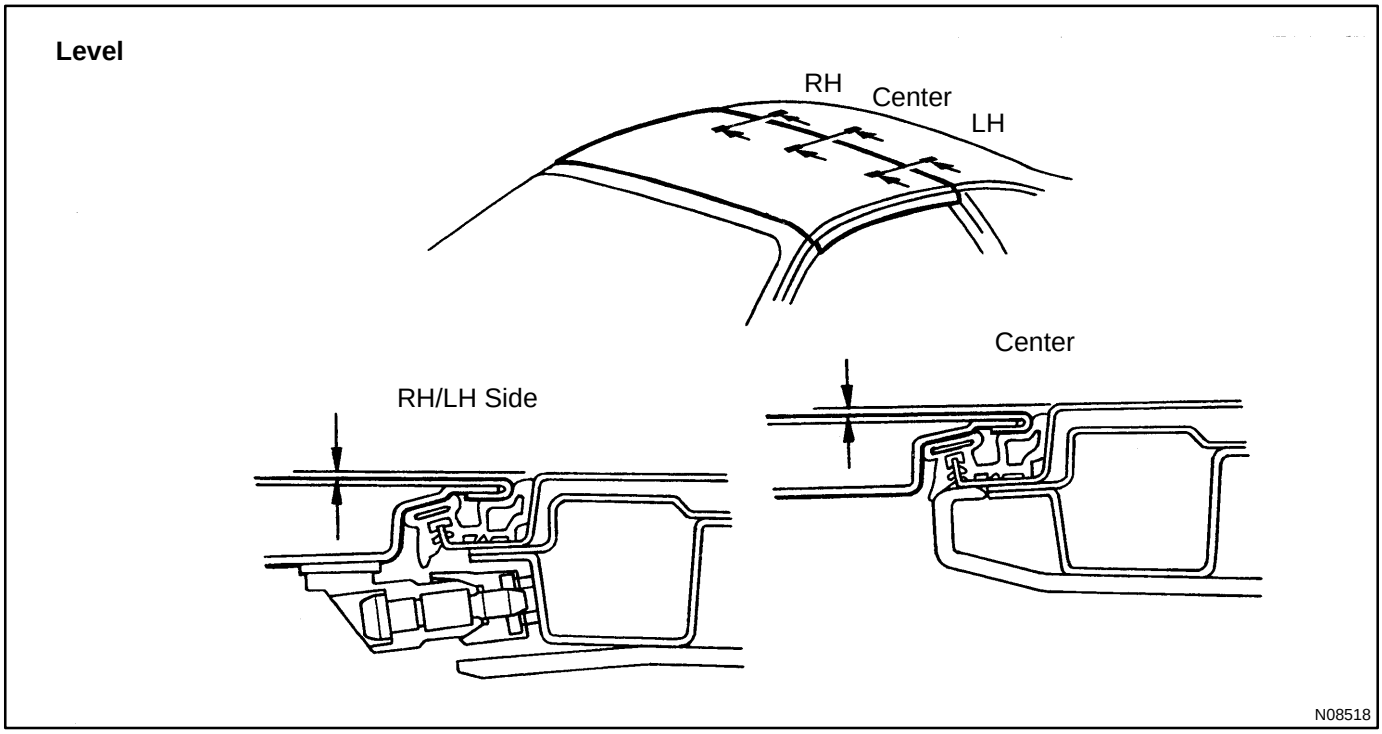

BO0R6-01

COMPONENTS

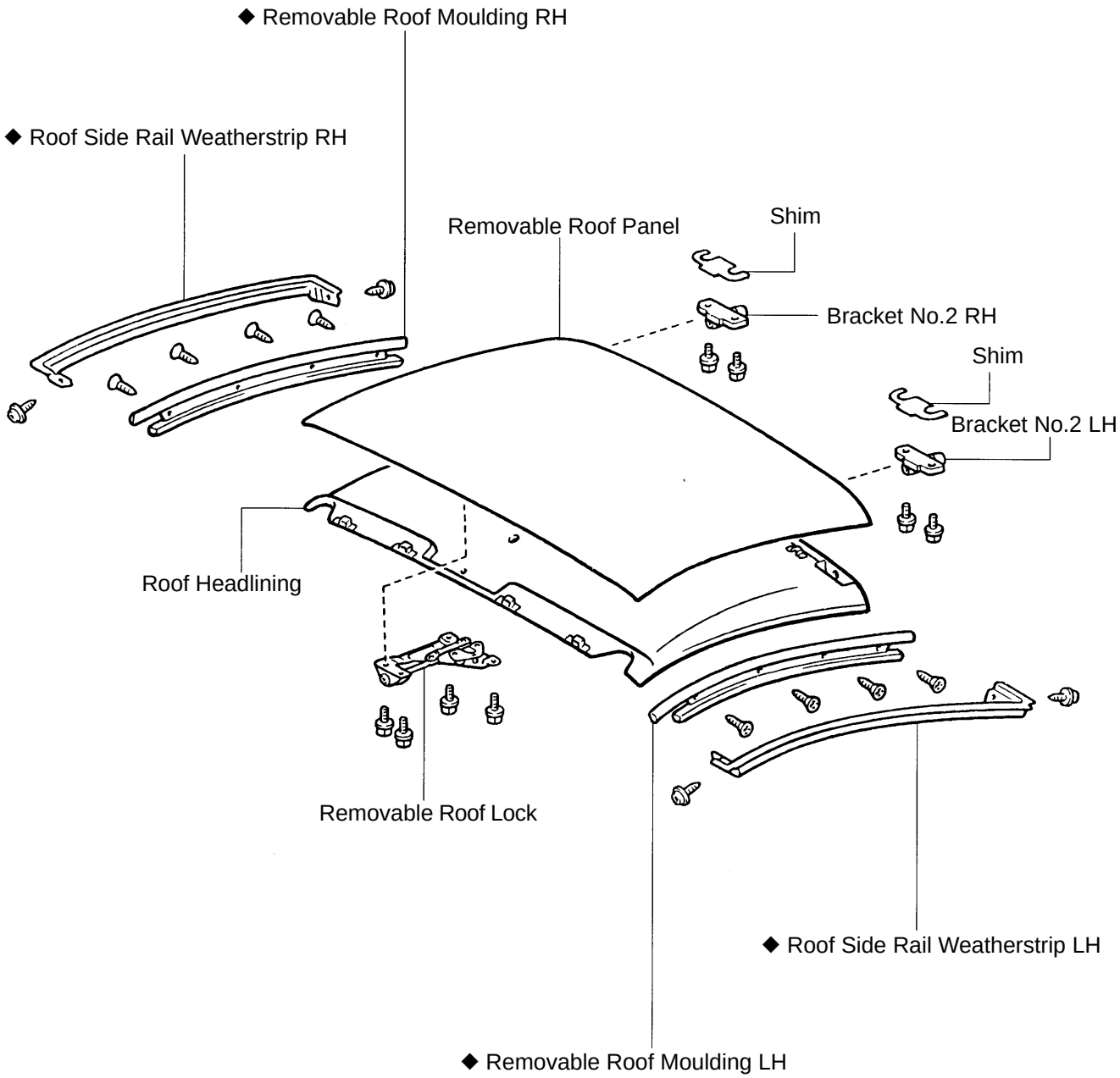

◆ Non-reusable part

N19394

BO0R7-01

DISASSEMBLY

REMOVE THESE PARTS:

(a) Roof side rail weatherstrip
(b) Removable roof moulding
(c) Roof headlining
(d) Removable roof lock
(e) Bracket No.2

BO0R8-01

ADJUSTMENT

1. REMOVE ROOF HEADLINING

(a) Removable roof headlining - for clearance adjustment.

(b) Rear roof headlining - for level adjustment.

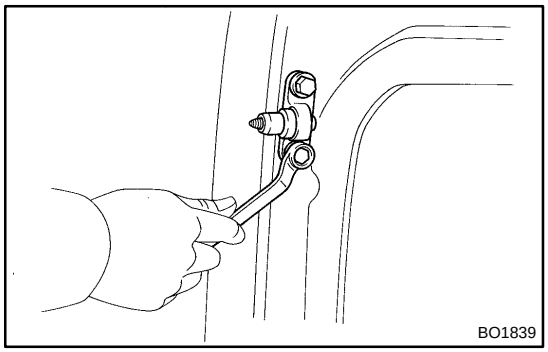

2. ADJUST CLEARANCE

Adjust the removable roof bracket by loosening the removable roof bracket bolts.

If the clearance is not within the specification, repair the body panel.

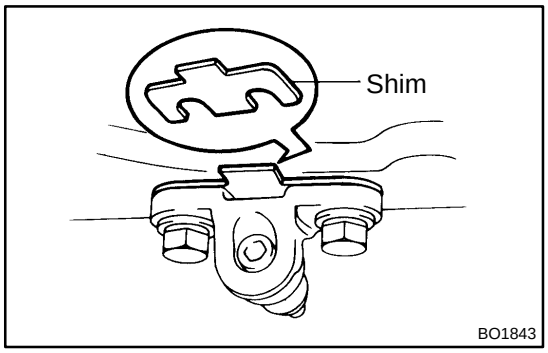

3. ADJUST LEVEL

Select the shim that makes the difference between the rear side of removable roof panel and rear roof panel a minimum.

Shim thickness:

1.0 mm (0.039 in.)

2.0 mm (0.079 in.)

4. INSTALL ROOF HEADLINING

Installation is in the reverse order to removal.

BO0R9-01

REASSEMBLY

1. INSTALL THESE PARTS:

(a) Bracket No.2
(b) Removable roof lock
(c) Roof headlining
(d) Removable roof moulding

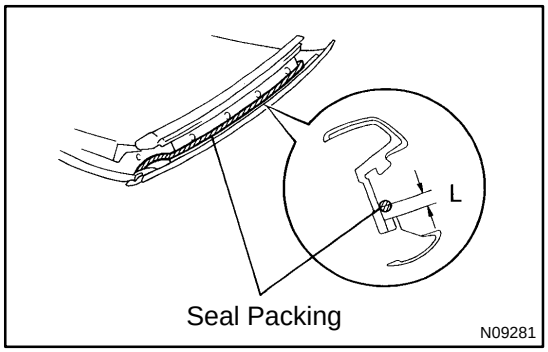

2. APPLY SEAL PACKING

Apply seal packing on the removable roof moulding as shown in the illustration.

L: 4 mm (0.16 in.)
Part No. 08826-00080 or equivalent

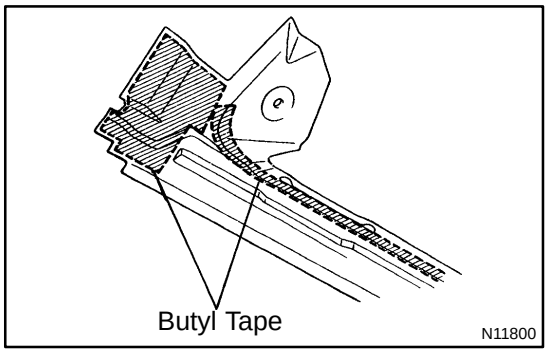

3. INSTALL ROOF SIDE RAIL WEATHERSTRIP

INSTRUMENT PANEL

COMPONENTS

BO0RA-01

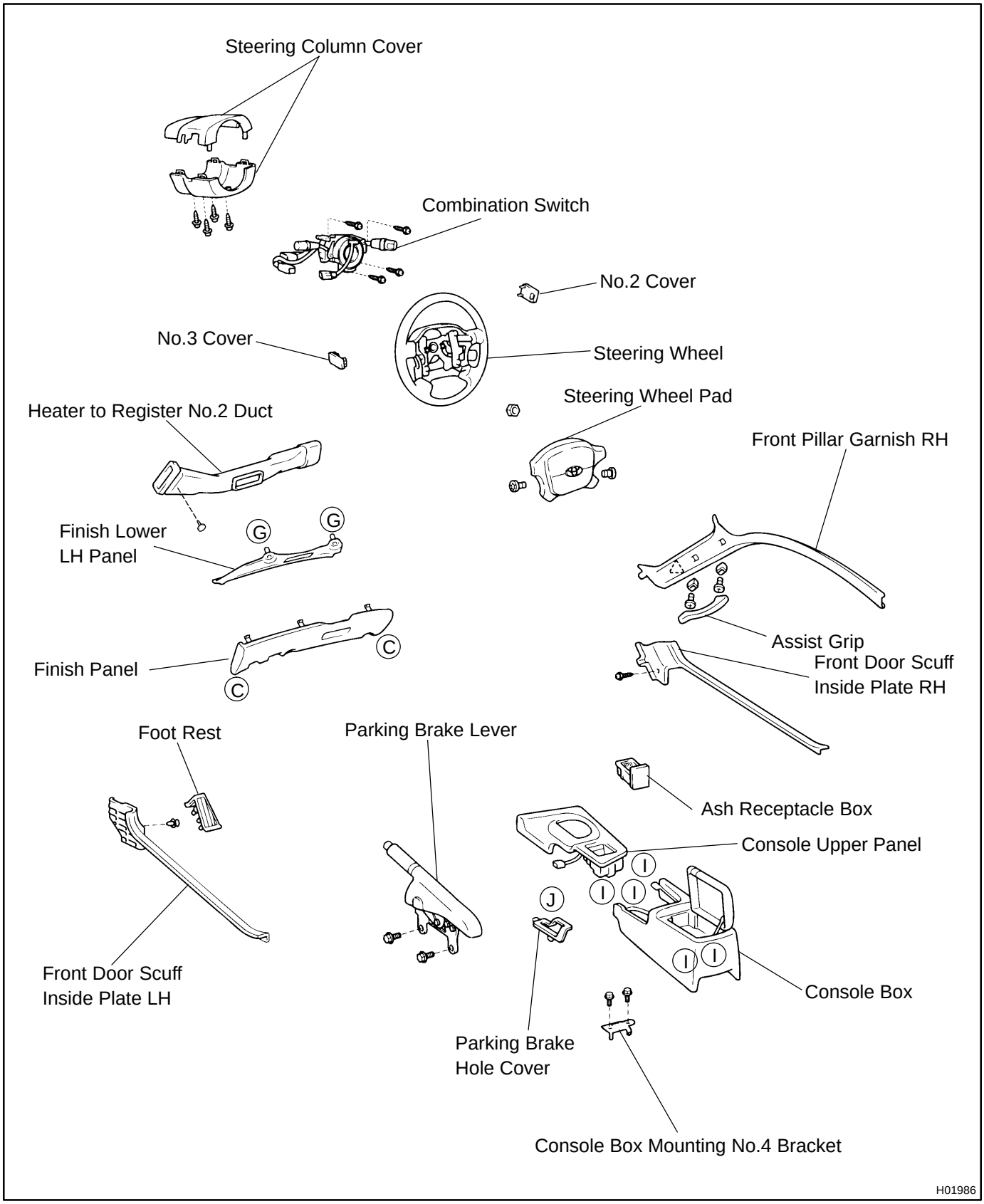

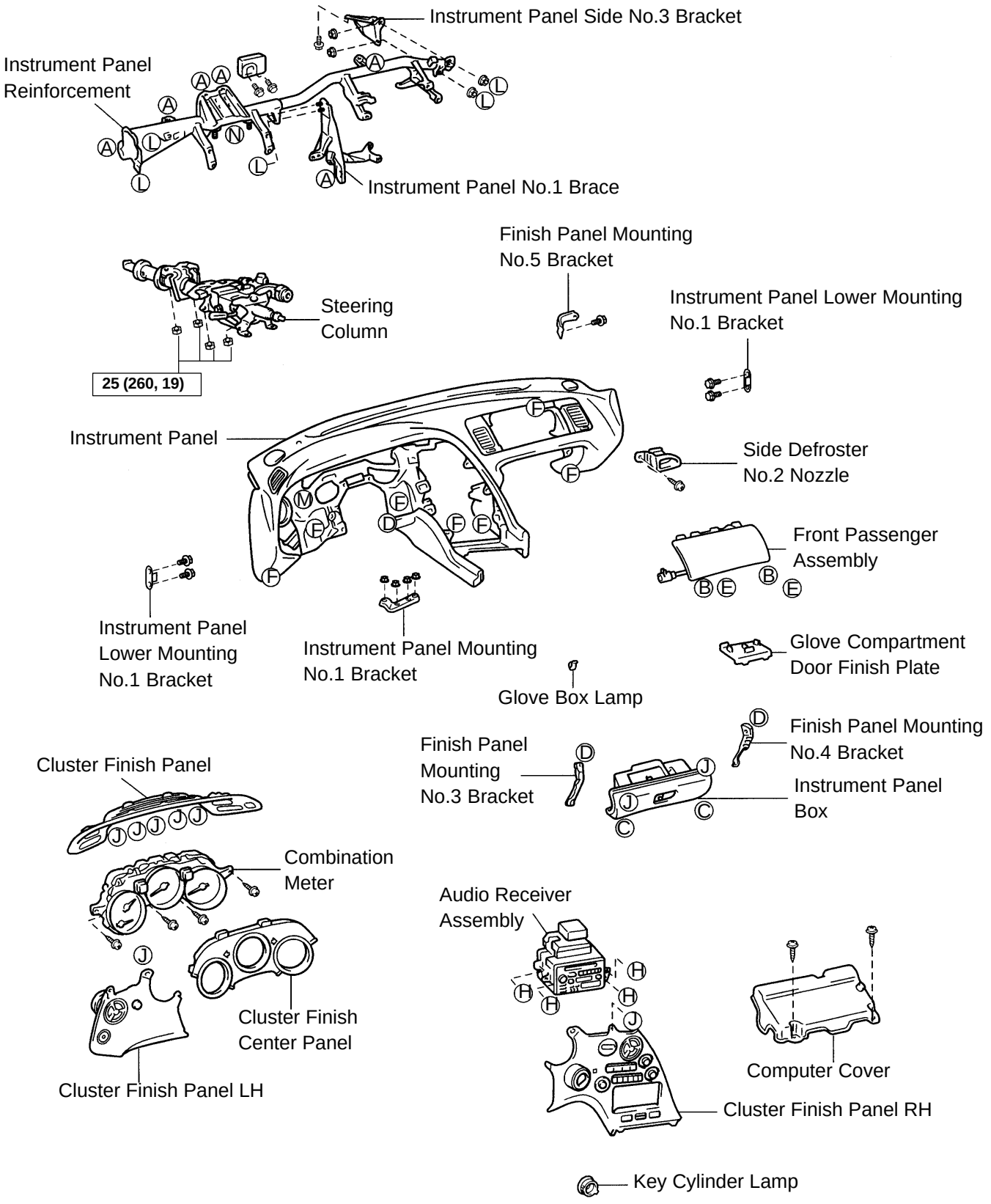

N·m (kgf·cm, ft·lbf) : Specified torque

N19395

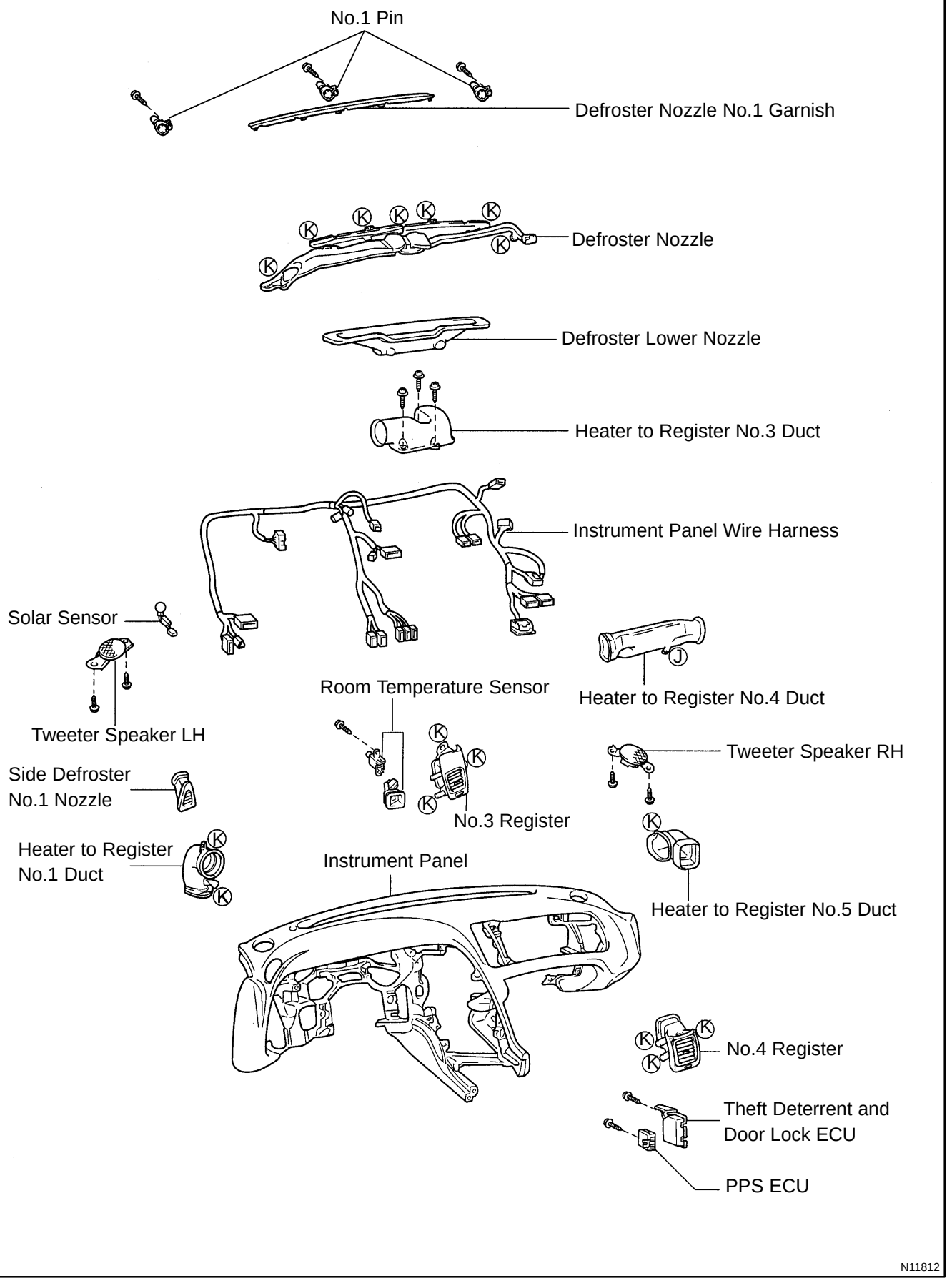
No.1 Pin
Defroster Nozzle No.1 Garnish
Defroster Nozzle
Defroster Lower Nozzle
Heater to Register No.3 Duct
Instrument Panel Wire Harness
Solar Sensor
Tweeter Speaker LH
Room Temperature Sensor
Heater to Register No.4 Duct
Tweeter Speaker RH
Side Defroster
No.1 Nozzle
No.3 Register
Heater to Register
No.1 Duct
Instrument Panel
Heater to Register No.5 Duct
No.4 Register
Theft Deterrent and
Door Lock ECU
PPS ECU
N11812

mm (in.)

	Shape	Size		Shape	Size		Shape	Size
Ⓐ	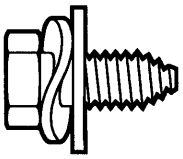	ø = 8 (0.31) L = 20 (0.79)	Ⓑ	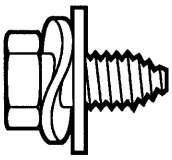	ø = 8 (0.31) L = 18 (0.71)	Ⓒ	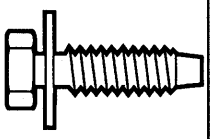	ø = 6 (0.24) L = 25 (0.98)
Ⓓ	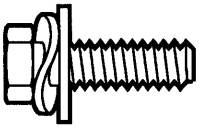	ø = 6 (0.24) L = 23 (0.91)	Ⓔ	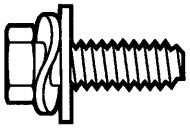	ø = 6 (0.24) L = 22 (0.87)	Ⓕ	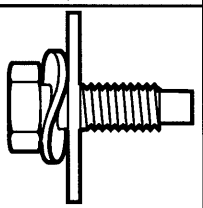	ø = 6 (0.24) L = 20 (0.79)
Ⓖ	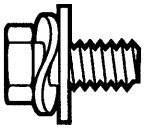	ø = 6 (0.24) L = 16 (0.63)	Ⓗ	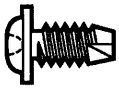	ø = 5 (0.20) L = 12 (0.47)	Ⓘ	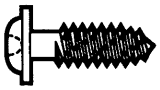	ø = 5 (0.20) L = 18 (0.71)
Ⓙ	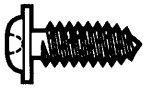	ø = 5.22 (0.2055) L = 16 (0.63)	Ⓚ		ø = 5 (0.20) L = 14 (0.55)	Ⓛ	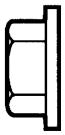	ø = 8 (0.31)
Ⓜ		ø = 6 (0.24)	Ⓝ	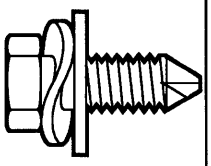	ø = 8 (0.31) L = 25 (0.98)			

V05739

BO0RB-01

REMOVAL

1. REMOVE STEERING WHEEL
(See page SR-11)

CAUTION:

- **When storing the wheel pad, keep the upper surface of the pad facing upward.**
- **Never disassemble the steering wheel pad.**

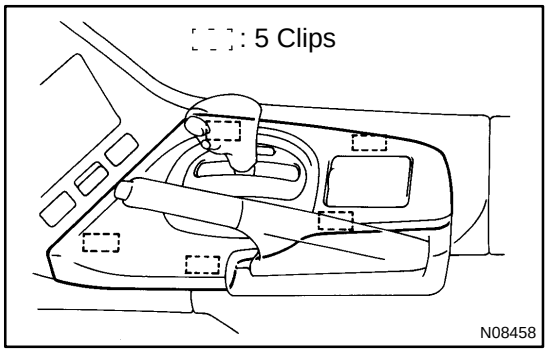

2. REMOVE THESE PARTS:

HINT:

Tape a screwdriver tip before use.

(a) Front pillar garnishes
(b) Assist grip
(c) Foot rest
(d) Front door scuff inside plates
(e) Steering column cover
(f) Console upper panel

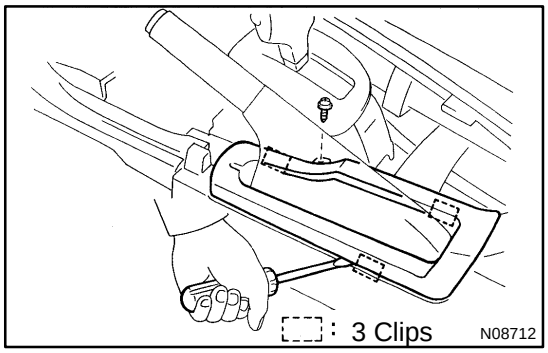

(g) Parking brake hole cover
(h) Console box

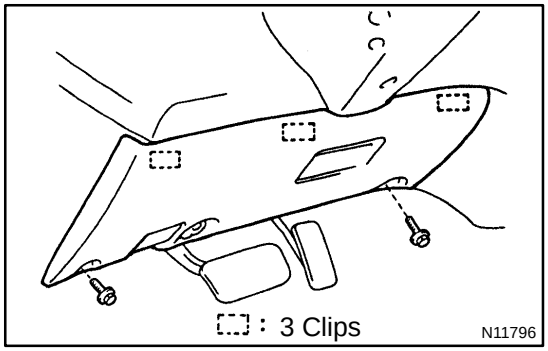

(i) Finish panel
(j) Finish lower LH panel

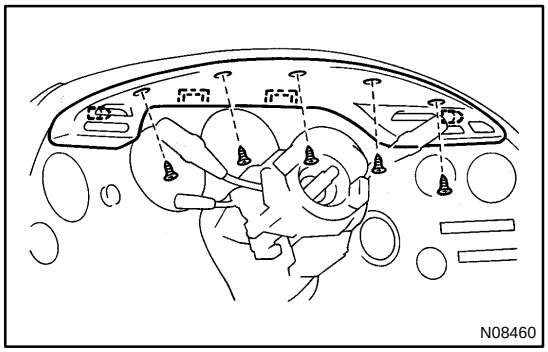

(k) Cluster finish panel

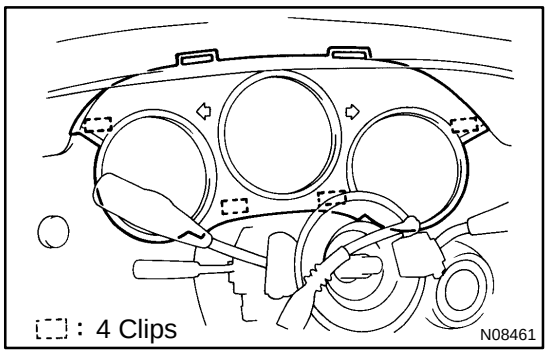

(l) Cluster finish center panel

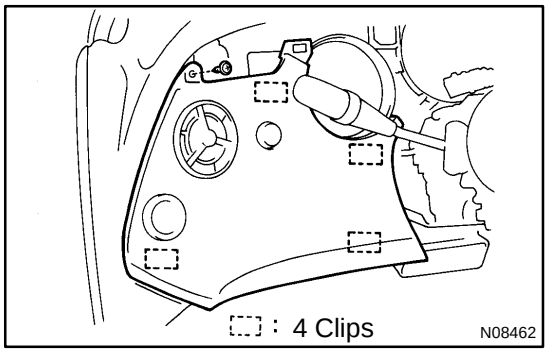

(m) Cluster finish panel LH

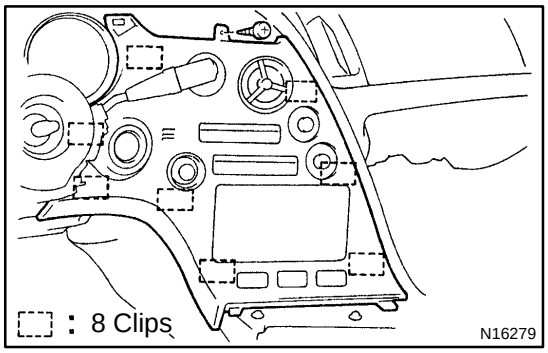

(n) Cluster finish panel RH
(o) Combination meter
(p) Heater to register No.2 duct
(q) Combination switch
(r) Audio receiver assembly
(s) Computer cover

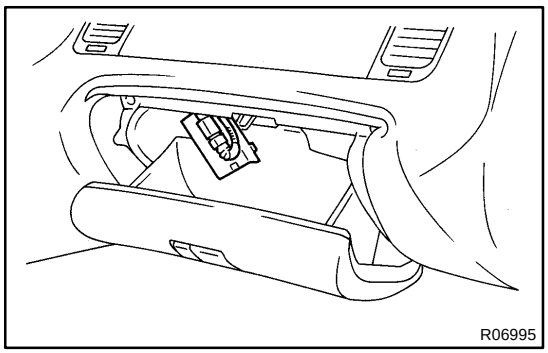

3. REMOVE INSTRUMENT PANEL BOX

(a) Remove the glove compartment door finish plate inside the instrument panel box.

NOTICE:

When handling the airbag connector, take care not to damage the airbag wire harness.

(b) Pull up and disconnect the airbag connector.

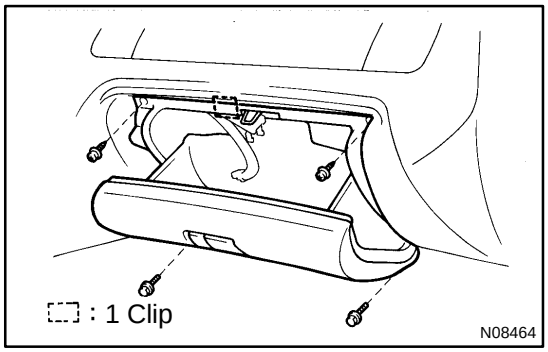

(c) Remove the instrument panel box.

4. REMOVE THESE PARTS:

(a) Finish panel mounting No.3 and No.4 brackets
(b) Heater to register No.4 duct
(c) Finish panel mounting No.5 bracket

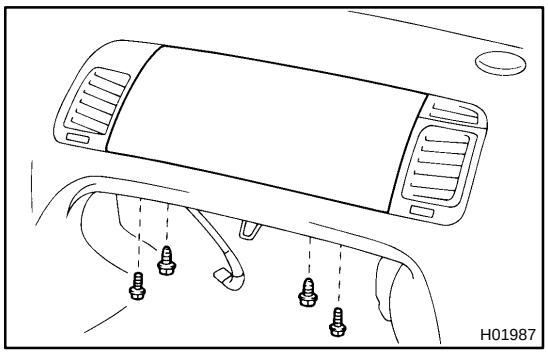

5. REMOVE FRONT PASSENGER AIRBAG ASSEMBLY

(a) Remove the 2 bolts from instrument panel.
Torque: 8.5 N·m (87 kgf·cm, 75 in.·lbf)

(b) Remove the 2 bolts from instrument panel reinforcement.
Torque: 20 N·m (204 kgf·cm, 15 ft·lbf)

(c) Remove the front passenger airbag assembly.

CAUTION:

- **Do not store the front passenger airbag assembly with the airbag door facing down.**
- **Never disassemble the front passenger airbag assembly.**

NOTICE:

At the time of installation, please refer to the following items.

- **Make sure the front passenger airbag assembly is installed to the specified torque.**
- **Take care that the wirings do not interfere with other parts and not pinched between other parts.**

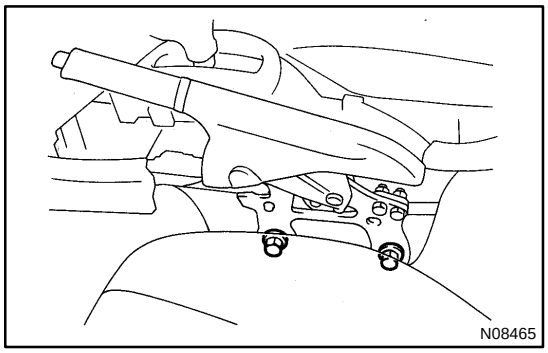

6. REMOVE THESE PARTS:

(a) Parking brake lever (2 bolts)
Torque: 59 N·m (600 kgf·cm, 43 ft·lbf)

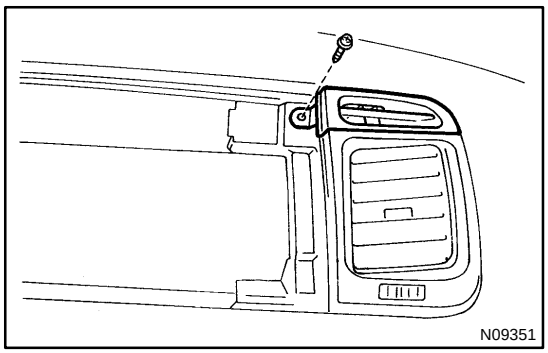

(b) Side defroster No.2 nozzle

(c) Steering column (4 nuts)
Torque: 25 N·m (260 kgf·cm, 19 ft·lbf)

7. REMOVE INSTRUMENT PANEL

(a) Disconnect the connectors.

(b) Remove the nut, screw, 8 bolts and instrument panel.
Torque: 8.8 N·m (90 kgf·cm, 78 ft·lbf)

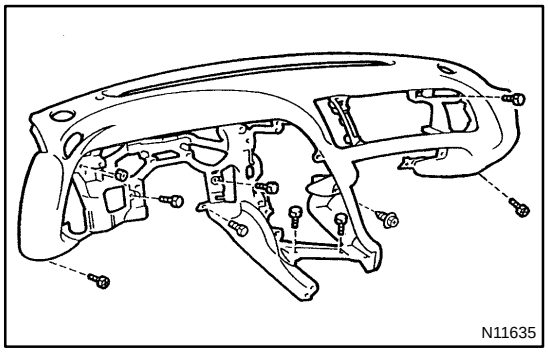

8. REMOVE INSTRUMENT PANEL REINFORCEMENT

(a) Remove the bolt, 2 nuts and instrument panel No.1 brace.
Torque: 21 N·m (210 kgf·cm, 15 ft·lbf)

(b) Remove the 6 bolts, 4 nuts and instrument panel reinforcement.

(c) Remove the bolt, 2 nuts and instrument panel side No.3 bracket.

BO0RC-02

DISASSEMBLY

1. REMOVE THESE PARTS FROM INSTRUMENT PANEL

(a) Defroster nozzle No.1 garnish
(b) Defroster nozzle
(c) Defroster lower nozzle
(d) Heater to register No.3 duct
(e) Solar sensor
(f) Tweeter speakers
(g) Side defroster No.1 nozzle
(h) Heater to register No.5 duct
(i) No.4 register
(j) Heater to register No.1 duct
(k) No.3 register
(l) Room temperature sensor
(m) Theft deterrent and door lock ECU
(n) PPS ECU
(o) No.1 pins

2. REMOVE INSTRUMENT PANEL WIRE HARNESS

ROOF HEADLINING

COMPONENTS

BO0RF-01

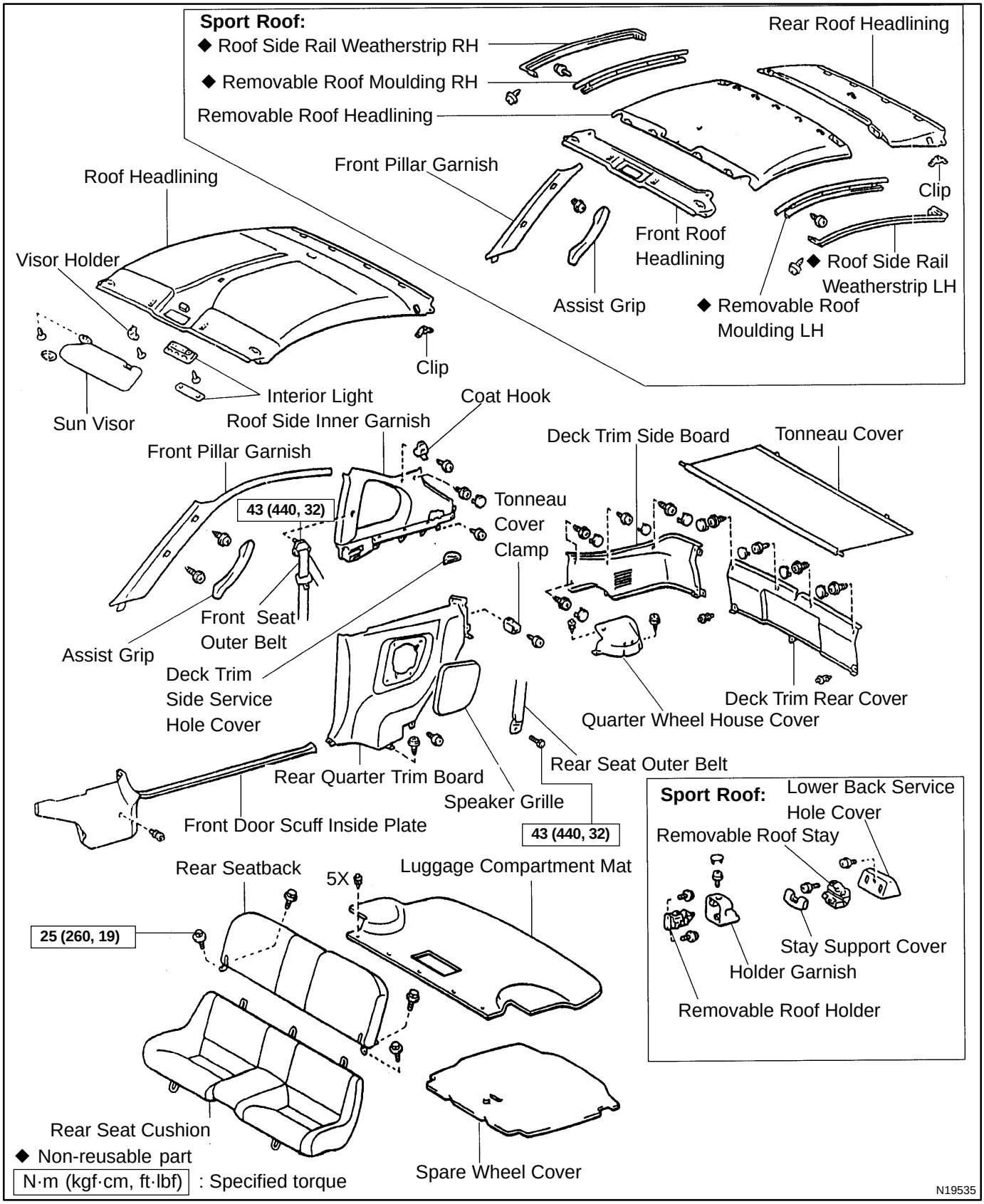

BO0RG-01

REMOVAL

1. REMOVE THESE PARTS:

(a) Tonneau cover
(b) Luggage compartment mat
(c) Spare wheel cover
(d) Rear seat cushion
(e) Rear seatback
Torque: 25 N·m (260 kgf·cm, 19 ft·lbf)

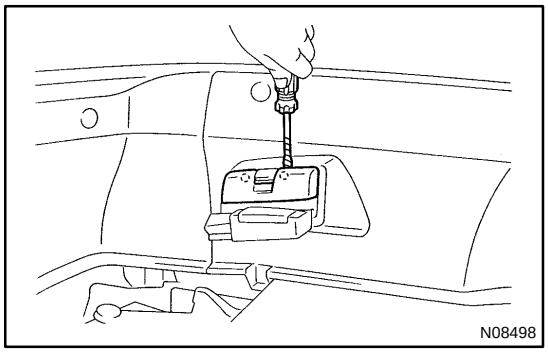
N08498

(f) Removable roof stay RH and LH (Sport roof)
(g) Deck trim rear cover
(h) Removable roof holder RH and LH (Sport roof)
(i) Quarter wheel house cover
(j) Deck trim side boards

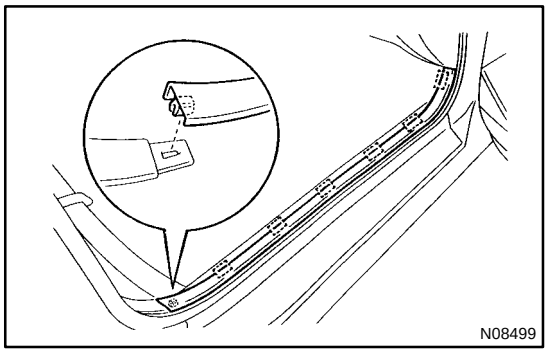
N08499

(k) Front door scuff inside plates
(l) Speaker grilles

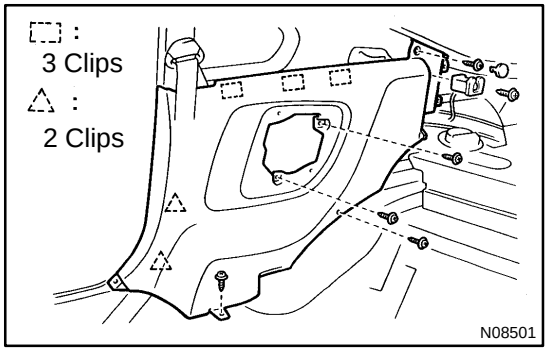

N08501

(m) Rear quarter trim boards
(n) Front seat outer belts
Torque: 43 N·m (440 kgf·cm, 32 ft·lbf)
(o) Rear seat outer belts
Torque: 43 N·m (440 kgf·cm, 32 ft·lbf)

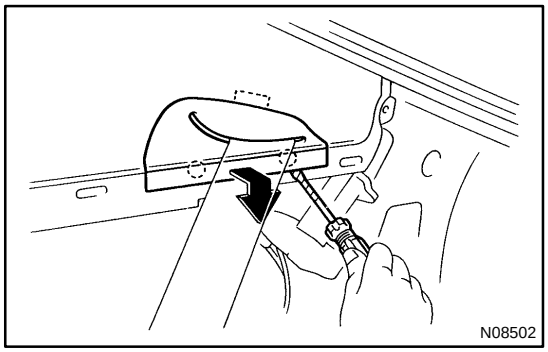
N08502

(p) Deck trim side service hole covers

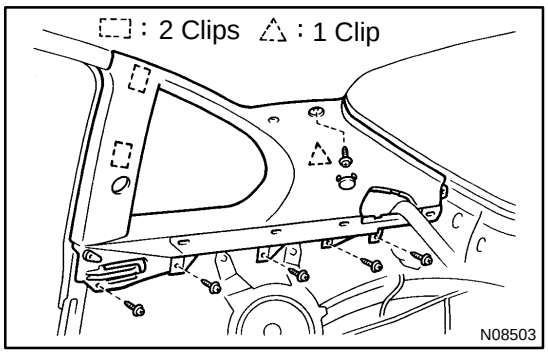

(q) Roof side inner garnishes
(r) Removable roof (Sport roof)

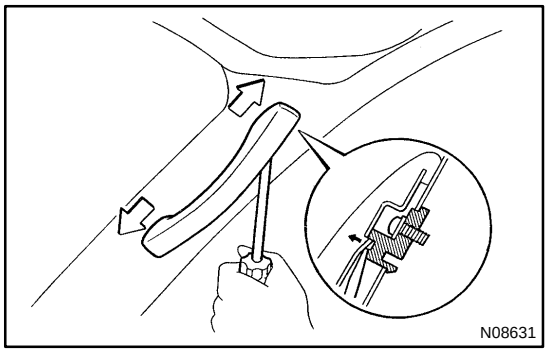

(s) Assist grip
HINT:
Tape a screwdriver tip before use.

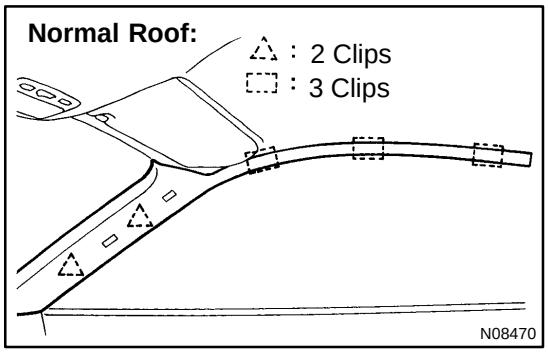

(t) Front pillar garnishes
(u) Interior light
(v) Sun visors and holders

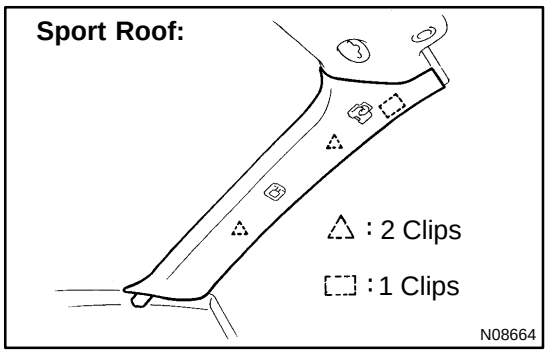

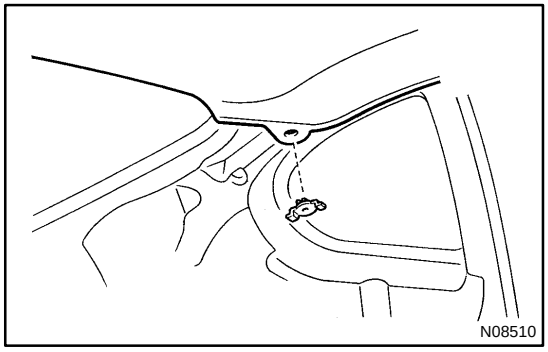

2. REMOVE ROOF HEADLINING

(a) Using a clip remover, remove the 2 clips.

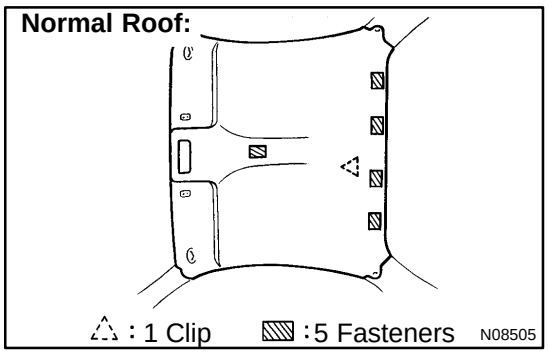

(b) Normal roof - Remove the roof headlining.

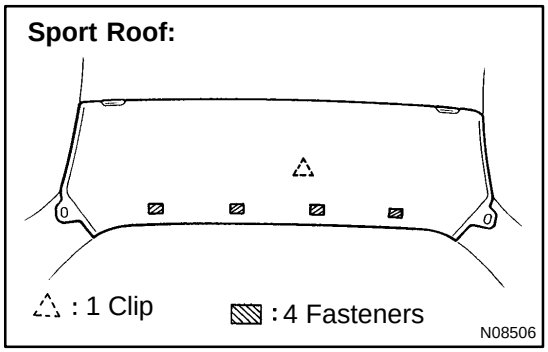

3. SPORT ROOF:
REMOVE ROOF HEADLINING

(a) Remove the rear roof headlining.

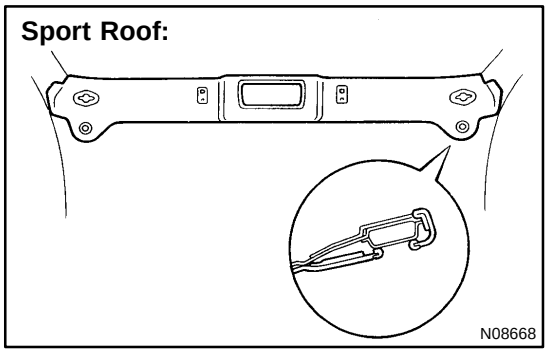

(b) Remove the front roof headlining.

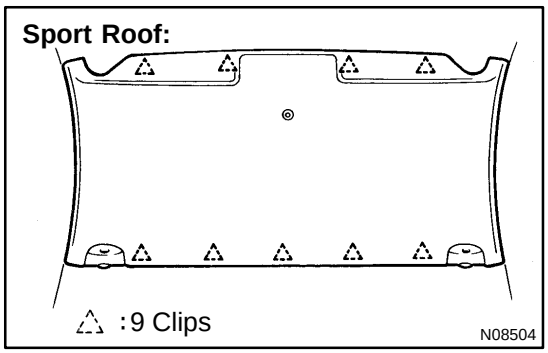

(c) Remove the removable roof headlining.
(See page BO-47)

FRONT SEAT

COMPONENTS

BO0RI-01

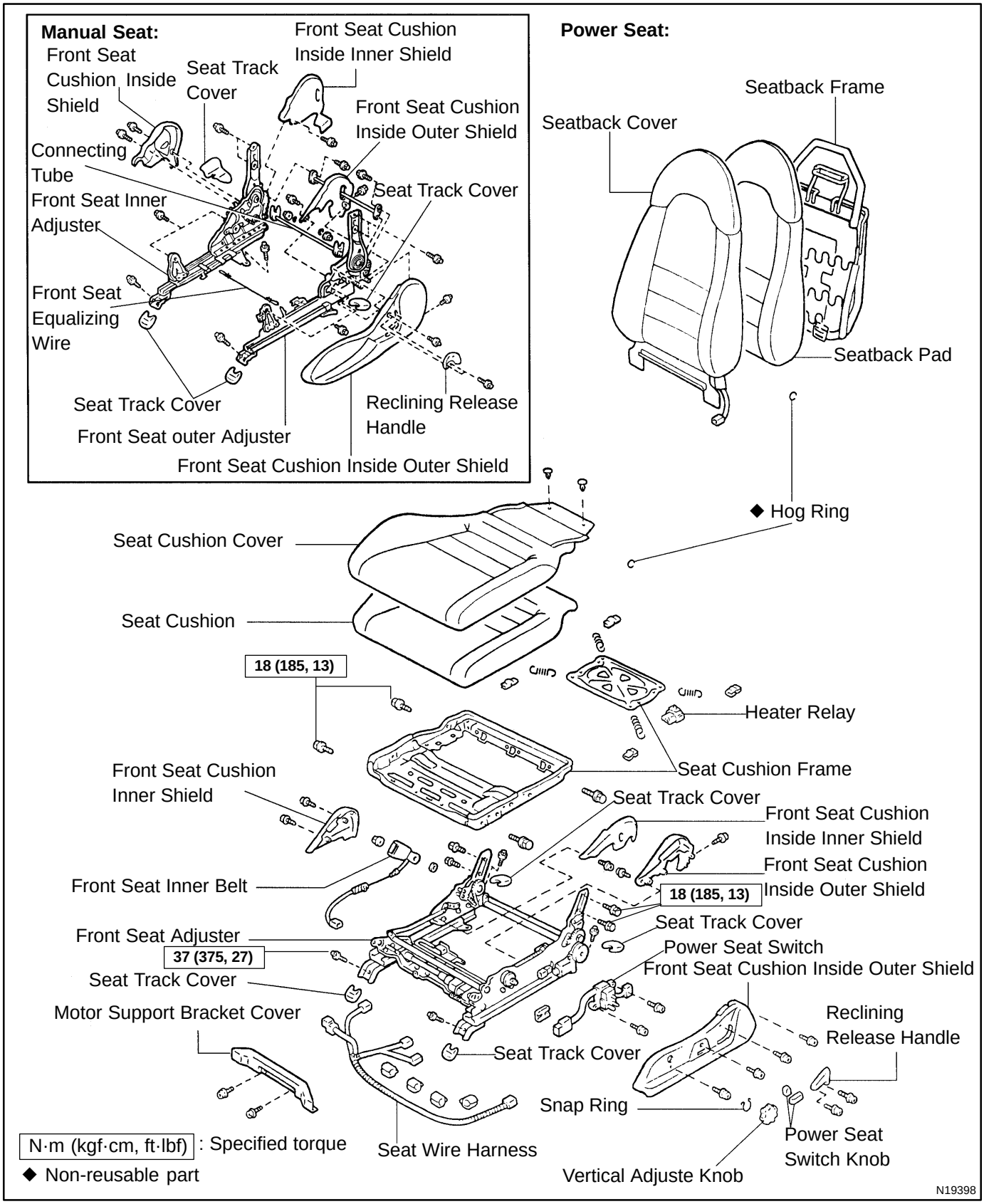

REAR SEAT

COMPONENTS

BO0RO-01

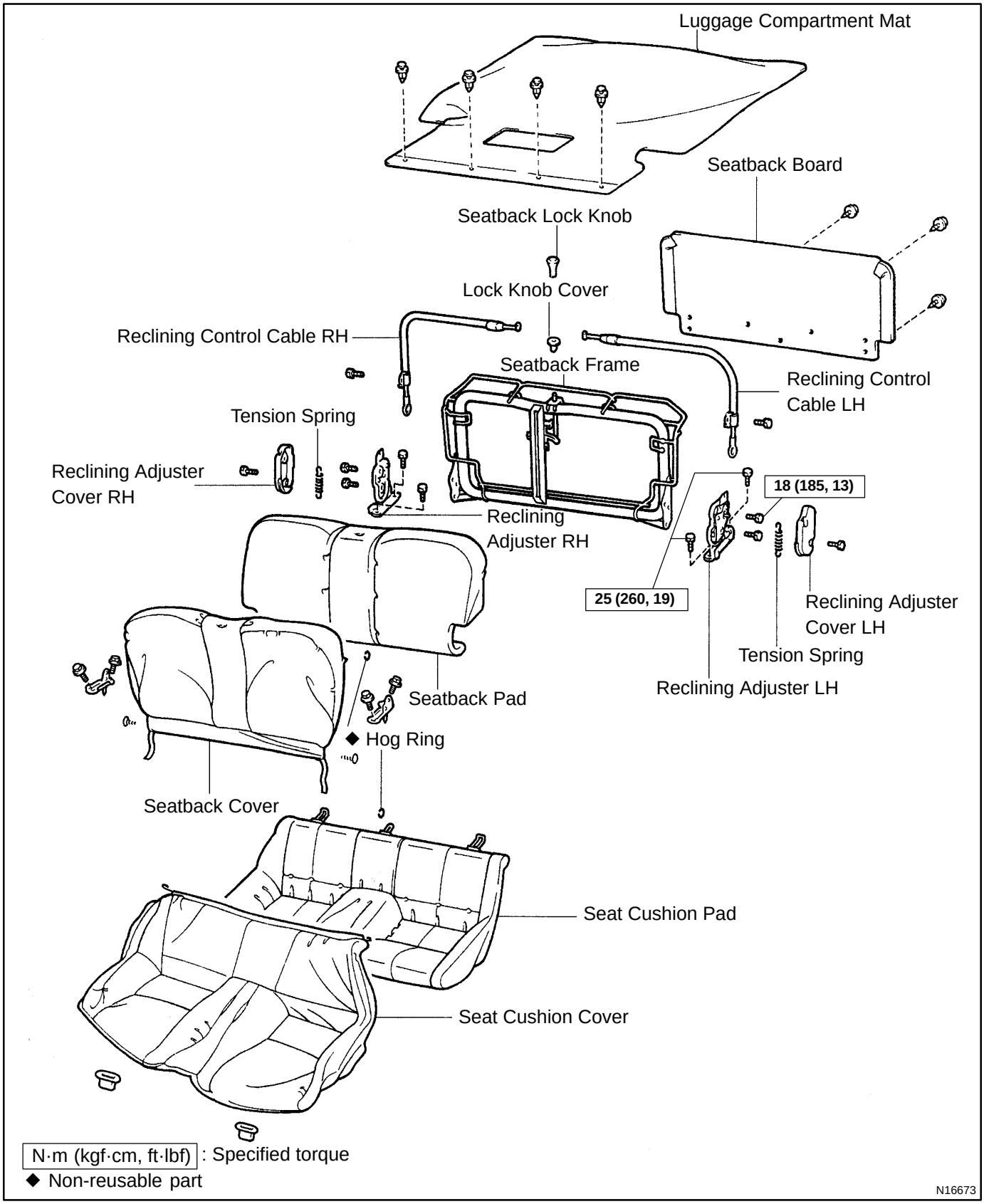

SEAT BELT

COMPONENTS

BOORT-01

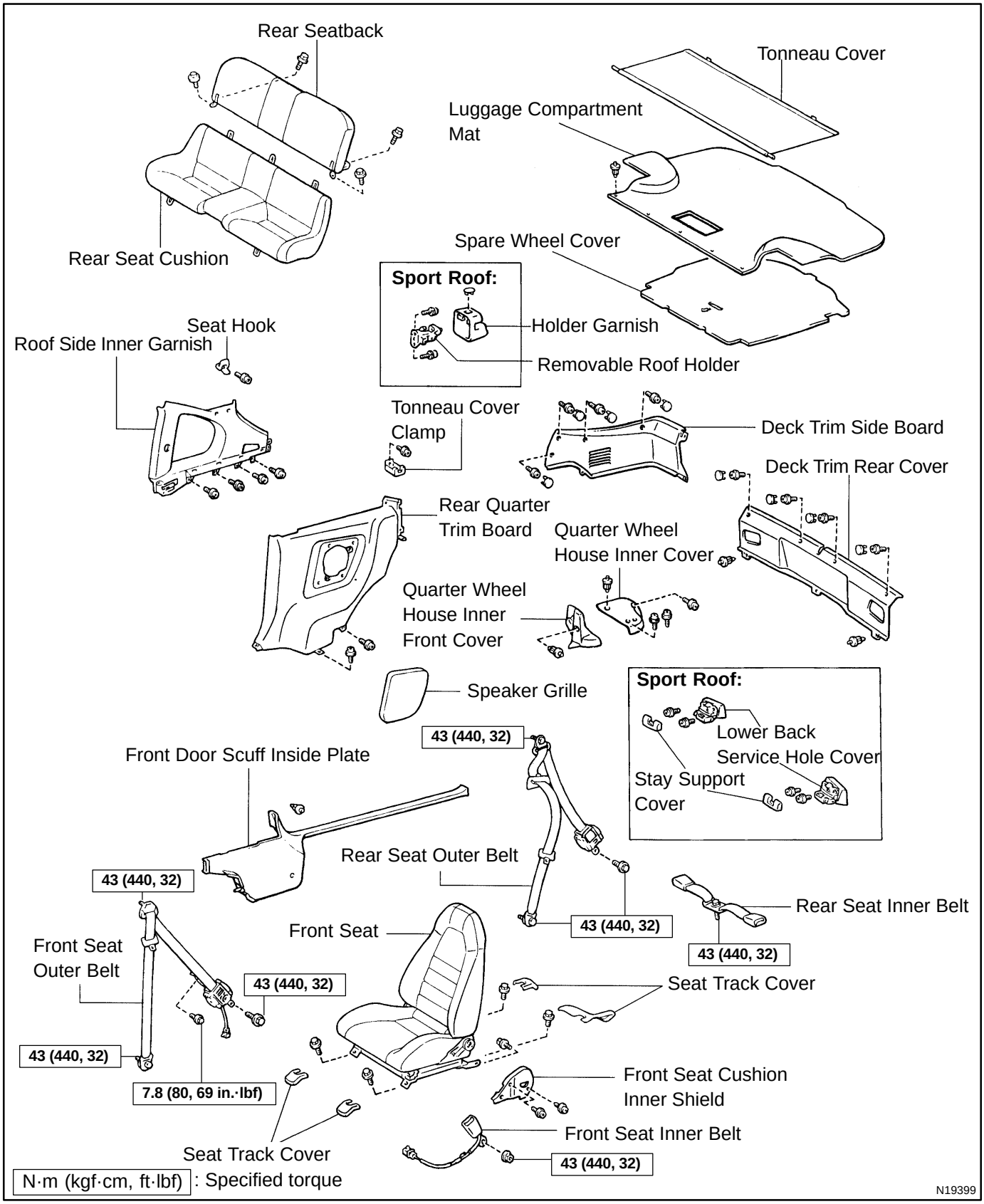

BO0RU-01

INSPECTION

CAUTION:

Replace the seat belt assembly (outer belt, inner belt, bolts or nuts and sill-bar) if it has been used in a severe impact. The entire assembly should be replaced even if damage is not obvious.

Emergency Locking Retractor (ELR) and Automatic Locking Retractor (ALR) type

1. All seat belts:

RUNNING TEST (IN SAFE AREA)

(a) Fasten the front seat belts.

(b) Drive the car at 10 mph (16 km/h) and make a very hard stop.

Check that the belt locks and cannot be extended at this time.

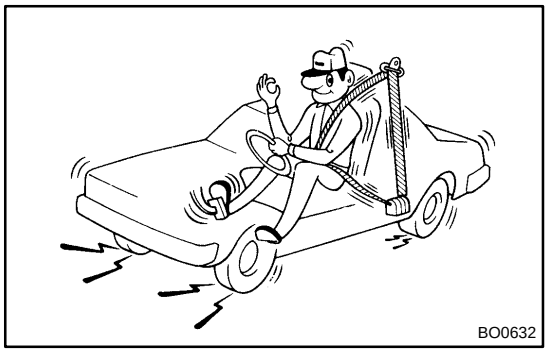

HINT:

Conduct this test in a safe area. If the belt does not lock, remove the belt mechanism assembly and conduct the following static check. Also, whenever installing a new belt assembly, verify the proper operation before installation.

2. Driver's seat belt (ELR):

STATIC TEST

(a) Make sure that the belt locks when pulled out quickly.

(b) Remove the locking retractor assembly.

(c) Tilt the retractor slowly.

(d) Make sure that the belt can be pulled out at a tilt of 15 degrees or less, and cannot be pulled out over 45 degrees of tilt.

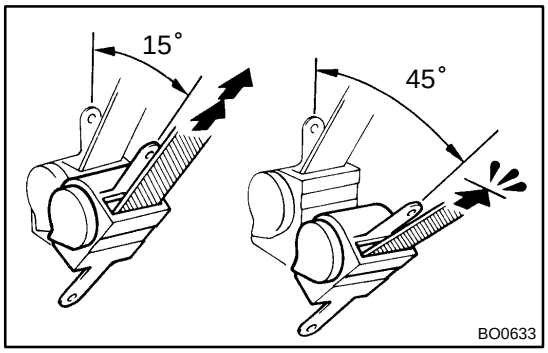

If a problem is found, replace the assembly.

3. Except driver's seat belt (ALR/ ELR):

STATIC TEST

(a) Make sure that the belt locks when pulled out quickly.

(b) Remove the locking retractor assembly.

(c) Pull out the whole belt and measure the length of the whole belt.

Then retract the belt slightly and pull it out again.

(d) Make sure that the belt cannot be extended further.

If a problem is found, replace the assembly.

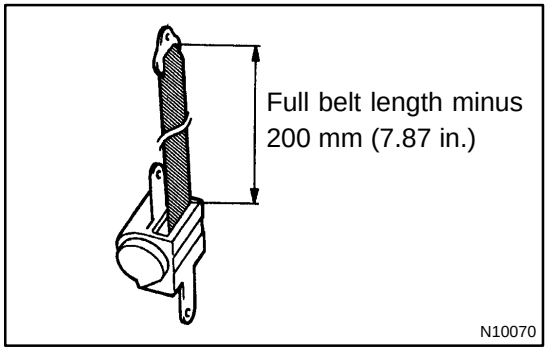

(e) Retract the whole belt, then pull out the belt until 200 mm (7.87 in.) of belt remains retracted.

(f) Tilt the retractor slowly.

(g) Make sure that the belt can be pulled out at a tilt of 15 degrees or less, and cannot be pulled out at over 45 degrees of tilt.

If a problem is found, replace the assembly.

TROUBLESHOOTING

PROBLEM SYMPTOMS TABLE

BR0GA-03

Use the table below to help you find the cause of the problem. The numbers indicate the priority of the likely cause of the problem. Check each part in order. If necessary, replace these parts.

Symptom	Suspect Area	See page
Lower pedal or spongy pedal	1. Brake system (Fluid leaks)	-
	2. Brake system (Air in)	BR-5
	3. Piston seals (Worn or damaged)	BR-28
		BR-36
		BR-48
		BR-54
	4. Master cylinder (Faulty)	BR-10
	5. Booster push rod (Out of adjustment)	BR-21
Brake drag	1. Brake pedal freeplay (Minimal)	BR-7
	2. Parking brake lever travel (Out of adjustment)	BR-9
	3. Parking brake wire (Sticking)	
	4. Parking brake shoe clearance (Out of adjustment)	BR-64
	5. Pad (Cracked or distorted)	BR-22
		BR-25
		BR-42
		BR-45
	6. Piston (Stuck)	BR-28
		BR-36
		BR-48
		BR-54
	7. Piston (Frozen)	BR-28
		BR-36
		BR-48
		BR-54
	8. Tension or return spring (Faulty)	BR-60
	9. Booster push rod (Out of adjustment)	BR-21
	10. Vacuum leaks for booster system	BR-19
	11. Master cylinder (Faulty)	BR-10

Brake pull	1. Piston (Stuck)	BR-28 BR-36 BR-48 BR-54
	2. Pad (Oily)	BR-22 BR-25 BR-42 BR-45
	3. Piston (Frozen)	BR-28 BR-36 BR-48 BR-54
	4. Disc (Scored)	BR-28 BR-36 BR-48 BR-54
	5. Pad (Cracked or distorted)	BR-22 BR-25 BR-42 BR-45
Hard pedal but brake inefficient	1. Brake system (Fluid leaks)	-
	2. Brake system (Air in)	BR-5
	3. Piston (Stuck)	BR-28 BR-36 BR-48 BR-54
	4. Pad (Cracked or distorted)	BR-22 BR-25 BR-42 BR-45
	5. Pad (Oily)	BR-22 BR-25 BR-42 BR-45
	6. Pad (Glazed)	BR-22 BR-25 BR-42 BR-45
	7. Disc (Scored)	BR-28 BR-36 BR-48 BR-54
	8. Booster push rod (Out of adjustment)	BR-21
	9. Vacuum leaks for booster system	BR-19

Symptom	Suspect Area	See page
Noise from brake	1. Pad (Cracked or distorted)	BR-22 BR-25 BR-42 BR-45
	2. Installation bolt (Loose)	BR-28 BR-36 BR-48 BR-54
	3. Disc (Scored)	BR-28 BR-36 BR-48 BR-54
	4. Pad support plate (Loose)	BR-22 BR-42
	5. Sliding pin (Worn)	BR-28 BR-48
	6. Pad (Dirty)	BR-22 BR-25 BR-42 BR-45
	7. Pad (Glazed)	BR-22 BR-25 BR-42 BR-45
	8. Tension or return spring (Faulty)	BR-60
	9. Anti-squeal shim (Damaged)	BR-22 BR-25 BR-42 BR-45
	10. Hold-down spring (Damaged)	BR-60

BRAKE FLUID

BR0GB-01

BLEEDING

HINT:

If any work is done on the brake system or if air in the brake lines is suspected, bleed the system of air.

NOTICE:

Do not let brake fluid remain on painted surfaces. Wash it off immediately.

1. REMOVE RESERVOIR CAP

2. FILL RESERVOIR WITH BRAKE FLUID

Fluid: SAE J1703 or FMVSS No.116DOT3

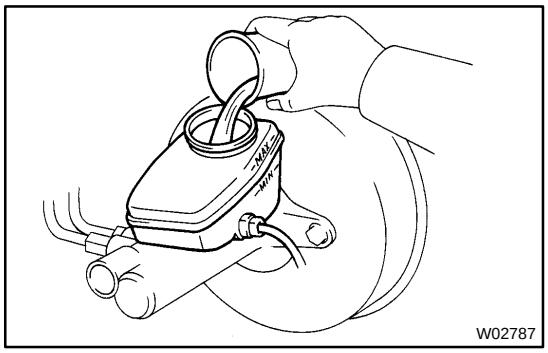
W02787

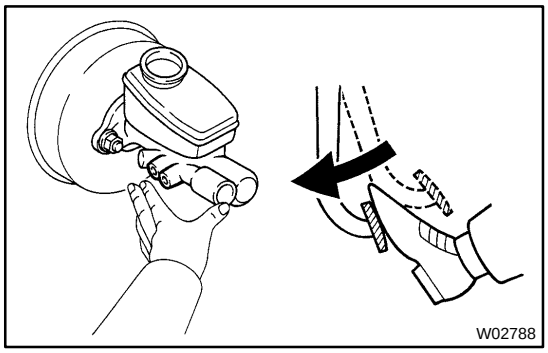
W02788

3. BLEED MASTER CYLINDER

HINT:

If the master cylinder has been disassembled or if the reservoir becomes empty, bleed the master cylinder.

(a) Disconnect the brake lines from the master cylinder.

(b) Slowly depress the brake pedal and hold it.

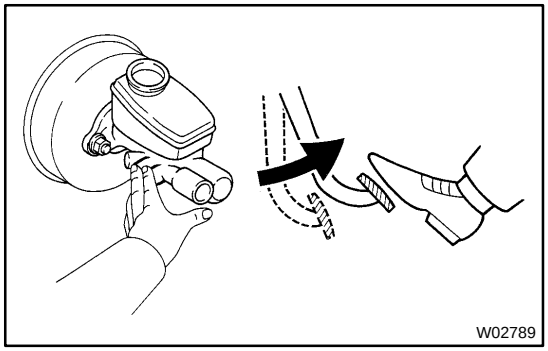
W02789

(c) Block off the outer holes with your fingers, and release the brake pedal.

(d) Repeat (b) 3 or 4 times.

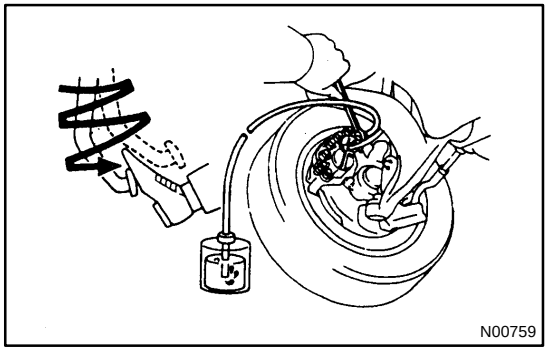
N00759

4. BLEED BRAKE LINE

(a) Connect the vinyl tube to the brake caliper.

(b) Depress the brake pedal several times, then loosen the bleeder plug with the pedal held down.

(c) At the point when fluid stops coming out, tighten the bleeder plug, then release the brake pedal.

(d) Repeat (b) and (c) until all the air in the fluid has been bled out.

Torque: (Bleeder plug)

11 N·m (110 kgf·cm, 8 ft·lbf)

(e) Repeat the procedure on the previous page to bleed the brake line for each wheel of air.

5. CHECK FLUID LEVEL IN RESERVOIR

Check the fluid level and add fluid if necessary.

6. INSTALL RESERVOIR CAP

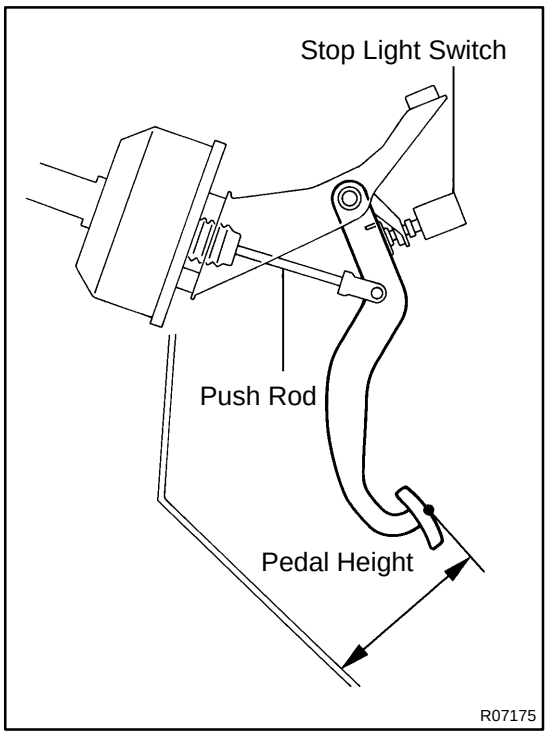

BRAKE PEDAL

BR1AW-01

ON-VEHICLE INSPECTION

1. CHECK THAT PEDAL HEIGHT IS CORRECT

Pedal height from asphalt sheet:
154.2 - 164.2 mm (6.071 - 6.465 in.)

If the pedal height is incorrect, adjust it.

2. IF NECESSARY, ADJUST PEDAL HEIGHT

(a) Remove the lower instrument panel and finish panel.
(b) Disconnect the connector from the stop light switch.
(c) Loosen the stop light switch lock nut and remove the stop light switch.
(d) Loosen the push rod lock nut.
(e) Adjust the pedal height by turning the pedal push rod.
(f) Tighten the push rod lock nut.
Torque: 25 N·m (260 kgf·cm, 19 ft·lbf)
(g) Install the stop light switch and turn it until it lightly contacts the pedal stopper.
(h) Turn the stop light switch back one turn.

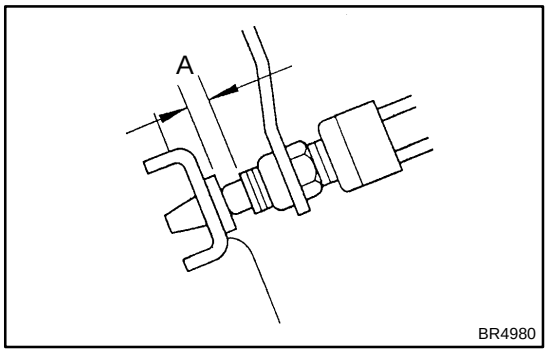

(i) Check the clearance (A) between stop lights switch and pedal.
Clearance: 0.5 - 2.4 mm (0.020 - 0.094 in.)
(j) Tighten the stop light switch lock nut.
(k) Connect the connector to the stop light switch.
(l) Check that the stop lights come on when the brake pedal is depressed, and go off when the brake pedal is released.
(m) After adjusting the pedal height, check the pedal freeplay.

If clearance (A) between the stop light switch and the brake pedal stopper has been adjusted correctly, the pedal freeplay will meet the specifications.

(n) Install the lower instrument panel and finish panel.

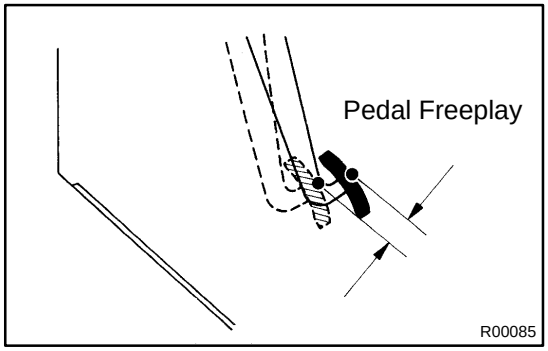

3. CHECK PEDAL FREEPLAY

(a) Stop the engine and depress the brake pedal several times until there is no more vacuum left in the booster.
(b) Push in the pedal by hand until the second point of resistance begins to be felt, then measure the distance, as shown.
Pedal freeplay: 1 - 6 mm (0.04 - 0.24 in.)

If incorrect, check the stop light switch clearance. If the clearance is OK, then troubleshoot the brake system.

HINT:
The freeplay to the 1st point of resistance is due to the play between the clevis and pin. It is 1 - 3 mm (0.04-0.12 in.) on the pedal.

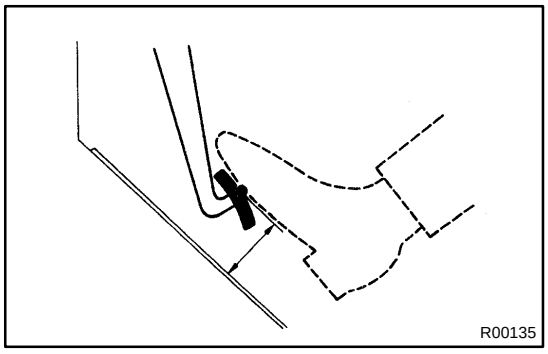

4. CHECK PEDAL RESERVE DISTANCE

(a) Release the parking brake.

(b) With the engine running, depress the pedal and measure the pedal reserve distance, as shown.

Pedal reserve distance at 490 N (50 kgf, 110.2 lbf):
2JZ-GE Engine: More than 72 mm (2.83 in.)
2JZ-GTE Engine: More than 70 mm (2.76 in.)

If the reserve distance is incorrect, troubleshoot the brake system.

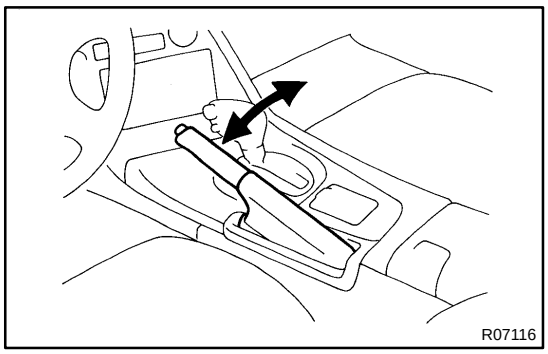
R07116

PARKING BRAKE LEVER

BR0GD-01

ON-VEHICLE INSPECTION

1. CHECK PARKING BRAKE LEVER TRAVEL

Pull the parking brake lever all the way up, and count the number of clicks.

Parking brake lever travel at 196 N (20 kgf, 44.1 lbf): 5 - 8 clicks

If incorrect, adjust the parking brake.

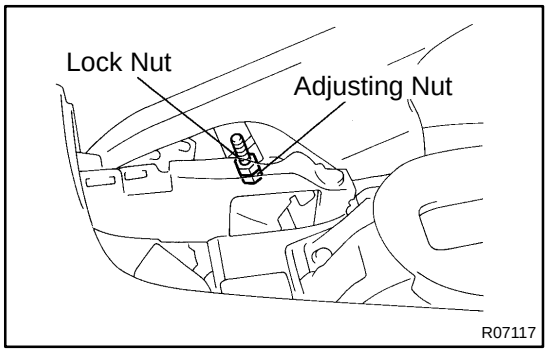

R07117

2. IF NECESSARY, ADJUST PARKING BRAKE

HINT:

Before adjusting the parking brake, make sure that the rear brake shoe clearance has been adjusted. For shoe clearance adjustment, see page BR-64 .

(a) Remove the upper console panel.
(b) Remove the screw and parking brake hole cover.
(c) Using a socket driver and spanner wrench, remove the adjusting lock nut.
(d) Turn the adjusting nut until the lever travel is correct.
(e) Install the adjusting lock nut.
(f) Using a socket driver and spanner wrench, tighten the adjusting lock nut.

Torque: 5.4 N·m (55 kgf·cm, 48 in.·lbf)

(g) Install the parking brake hole cover with the screw.
(h) Install the upper console panel.

BRAKE MASTER CYLINDER

COMPONENTS

BR0GE-02

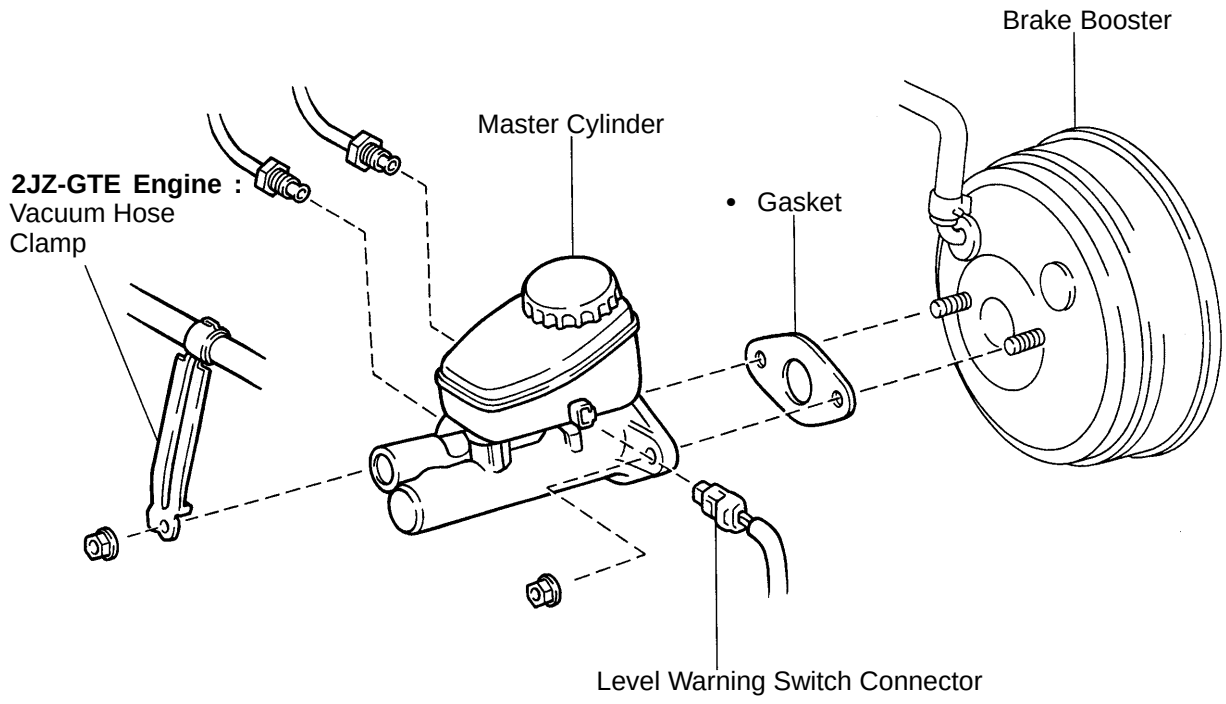

• Non-reusable part

W02667

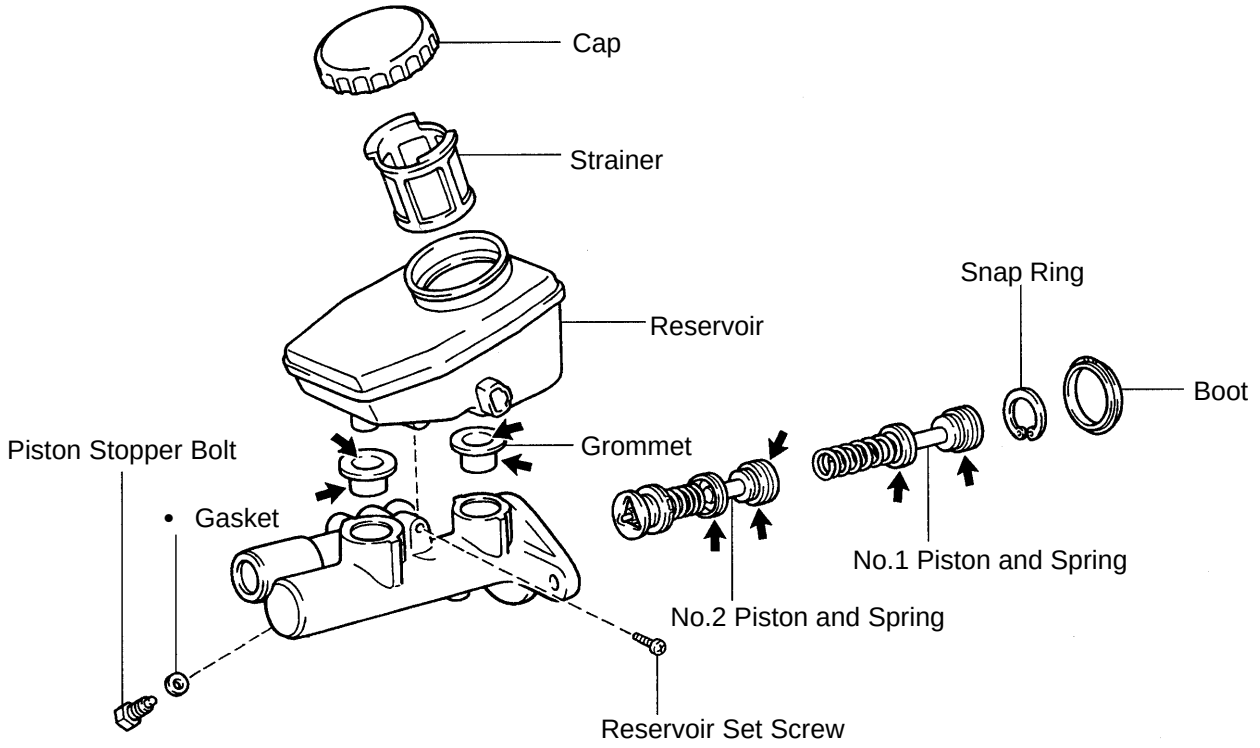
Cap
Strainer
Reservoir
Snap Ring
Boot
Grommet
Piston Stopper Bolt
• Gasket
No.1 Piston and Spring
No.2 Piston and Spring
Reservoir Set Screw
• Non-reusable part
➡ Lithium soap base glycol grease
W02668

BR0GF-01

REMOVAL

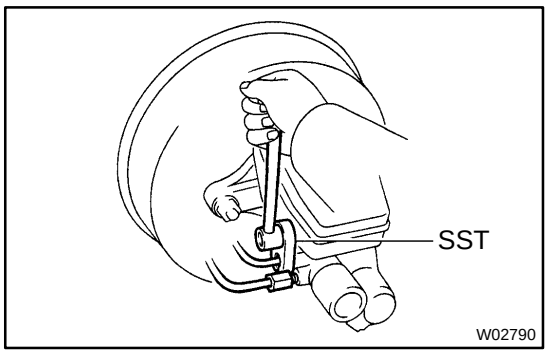

1. DISCONNECT LEVEL WARNING SWITCH CONNECTOR

2. DRAW OUT FLUID WITH SYRINGE

NOTICE:

Do not let brake fluid remain on a painted surface. Wash it off immediately.

3. DISCONNECT BRAKE LINES

Using SST, disconnect the brake lines from the master cylinder.

SST 09023-00100

Torque: 15 N·m (155 kgf·cm, 11 ft·lbf)

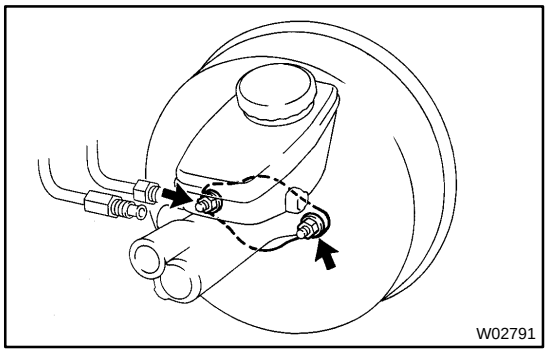

4. REMOVE MASTER CYLINDER

(a) Remove the 2 nuts.

Torque: 13 N·m (130 kgf·cm, 9 ft·lbf)

(b) 2JZ-GE Engine:

Remove the master cylinder and gasket from the brake booster.

(c) 2JZ-GTE Engine:

Remove the vacuum hose clamp, master cylinder and gasket from the brake booster.

BR0GG-01

DISASSEMBLY

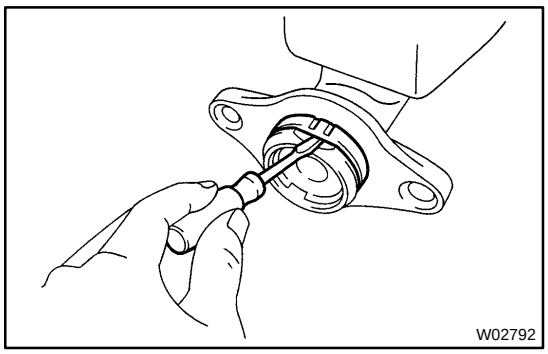

1. REMOVE MASTER CYLINDER BOOT

Using a screwdriver, remove the master cylinder boot.

NOTICE:

At the time of reassembly, please refer to the following item.

Facing the UP mark on the master cylinder boot upwards, install the cylinder boot to the master cylinder.

2. REMOVE RESERVOIR CAP AND STRAINER

3. REMOVE RESERVOIR

Remove the set screw and pull out the reservoir.

Torque: 1.8 N·m (18 kgf·cm, 16 in.·lbf)

4. REMOVE 2 GROMMETS

5. PLACE CYLINDER IN VISE

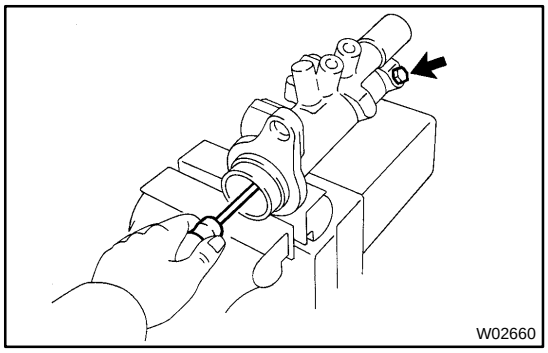

6. REMOVE PISTON STOPPER BOLT

Using a screwdriver, push the pistons in all the way and remove the No.2 piston stopper bolt and gasket.

Torque: 10 N·m (100 kgf·cm, 7 ft·lbf)

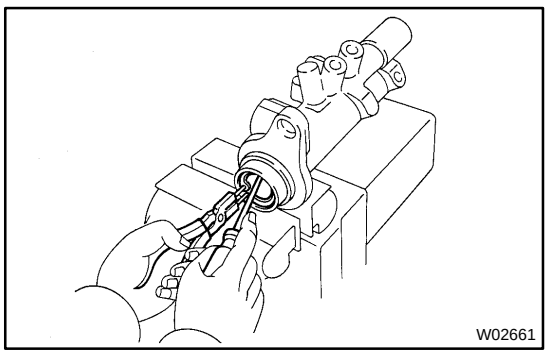

7. REMOVE 2 PISTONS

(a) Push in the piston with a screwdriver and remove the snap ring with snap ring pliers.

HINT:

Tape the screwdriver tip before use.

(b) Remove the No. 1 piston and spring by hand, pulling straight out, not at an angle.

NOTICE:

- **If pulled out and install at an angle, there is a possibility that the cylinder bore could be damaged.**
- **At the time of reassembly, be careful not to damage the rubber lips on the pistons.**

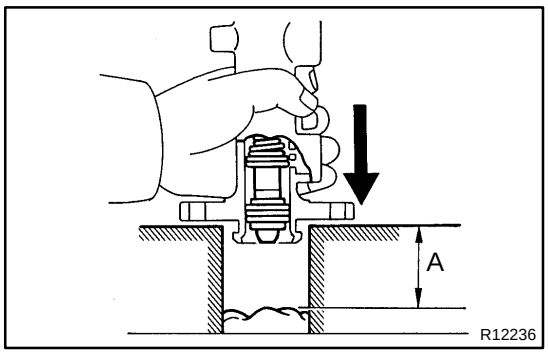

(c) Place a rag and 2 wooden blocks on the work table and lightly tap the cylinder flange against the block edges until the piston drops out of the cylinder.

HINT:

Make sure the distance (A) from the rag to the top of the blocks is at least 100 mm (3.94 in.).

BR0GJ-01

INSTALLATION

Installation is in the reverse order of removal (See page BR-12).

1. **BEFORE INSTALLATION, ADJUST LENGTH OF BRAKE BOOSTER PUSH ROD (See page BR-21)**
2. **AFTER INSTALLATION, FILL BRAKE FLUID AND BLEED BRAKE SYSTEM (See page BR-5)**
3. **CHECK FOR LEAKS, CHECK AND ADJUST BRAKE PEDAL (See page BR-7)**

BR0GL-03

COMPONENTS

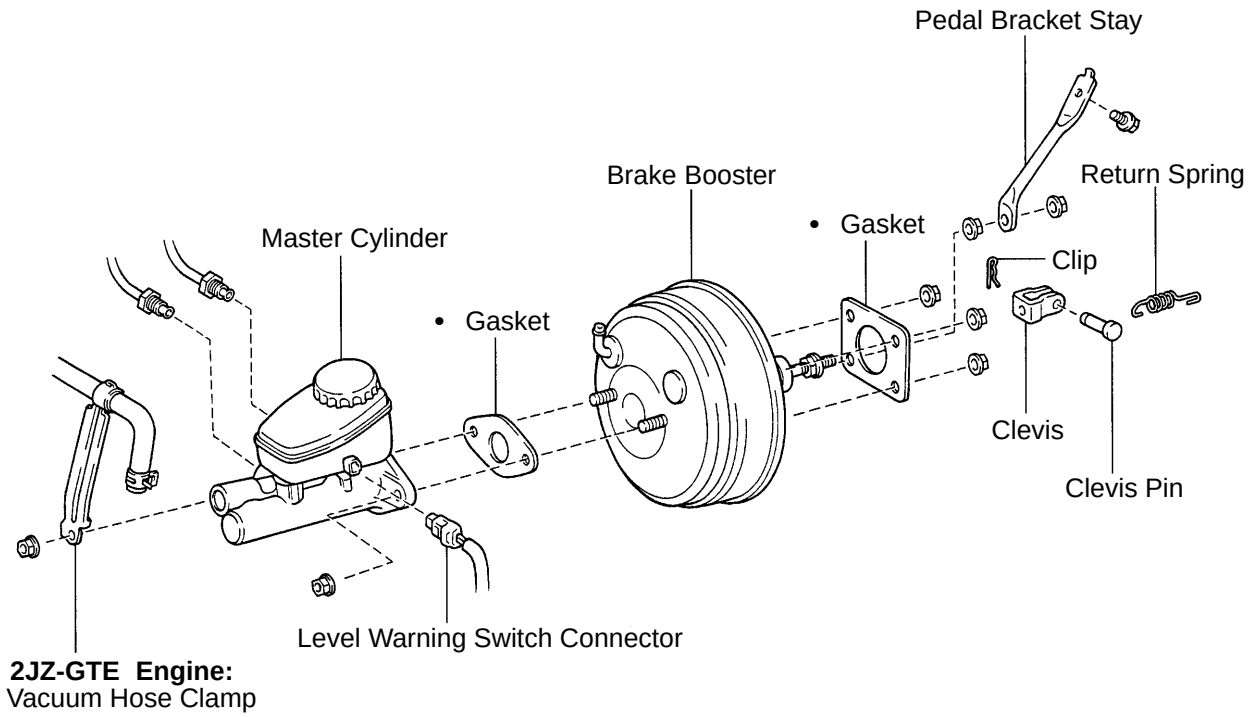

• Non-reusable part

W02993

BR0GM-02

REMOVAL

1. REMOVE THESE PARTS

- Master cylinder (See page BR-12)
- Vacuum hose
- Clip, clevis pin and return spring

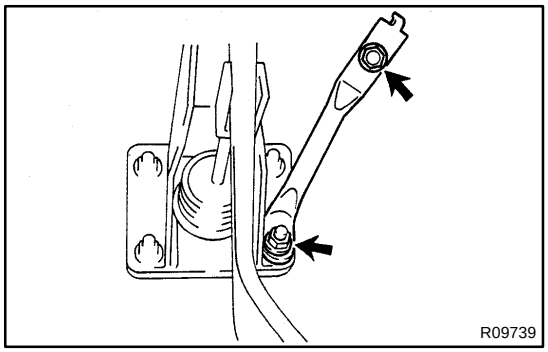

2. REMOVE PEDAL BRACKET STAY

(a) Remove the steering column assembly (See page SR-11).

(b) Remove the bolt and nut.

(c) Remove the pedal bracket stay.

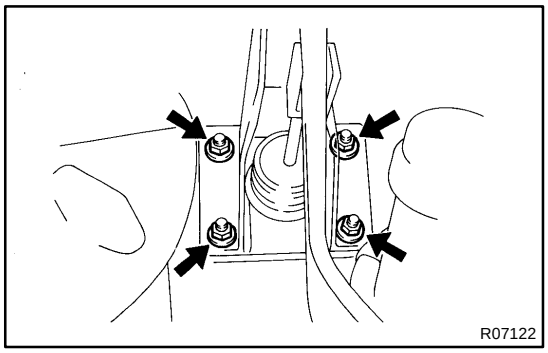

3. REMOVE BRAKE BOOSTER

(a) Remove the 4 booster installation nuts and clevis.

(b) Remove the booster and gasket.

BR0GN-03

INSTALLATION

1. INSTALL BRAKE BOOSTER

(a) Install the booster and a new gasket.

(b) Install the clevis to the operating rod.

(c) Install and torque the booster installation nuts.
Torque: 13 N·m (130 kgf·cm, 9 ft·lbf)

(d) Insert the clevis pin into the clevis and brake pedal, and install the clip to the clevis pin.

(e) Install the pedal return spring.

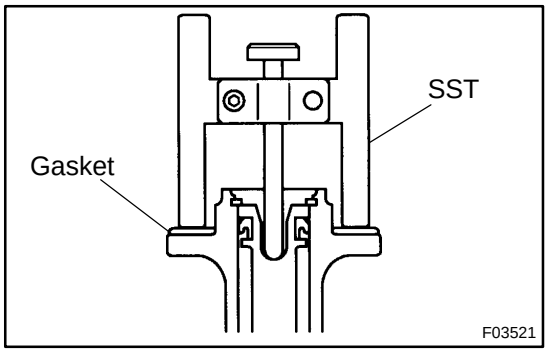

2. ADJUST LENGTH OF BOOSTER PUSH ROD

(a) Install the gasket on the master cylinder.

(b) Set the SST on the gasket, and lower the pin until its tip slightly touches the piston.
SST 09737-00010

(c) Turn the SST upside down, and set it on the booster.
SST 09737-00010

(d) Measure the clearance between the booster push rod and pin head (SST).
Clearance: 0 mm (0 in.)

(e) Adjust the booster push rod length until the push rod lightly touches the pin head.

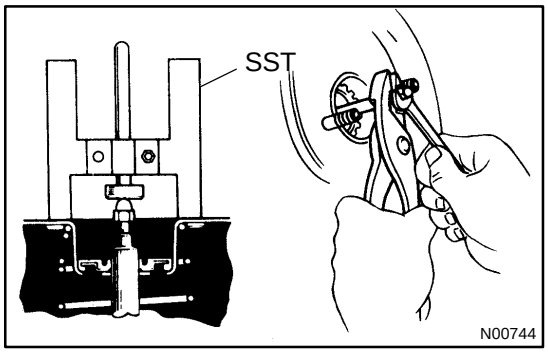

HINT:
When adjusting the push rod, depress the brake pedal enough so that the push rod sticks out.

3. INSTALL PEDAL BRACKET STAY

(a) Install the pedal bracket stay.

(b) Install the bolt and nut.

(c) Install the steering column assembly (See page SR-21).

4. INSTALL THESE PARTS

- Vacuum hose
- Master cylinder (See page BR-17)

5. FILL BRAKE RESERVOIR WITH BRAKE FLUID AND BLEED BRAKE SYSTEM (See page BR-5)

6. CHECK FOR FLUID LEAKAGE

7. CHECK AND ADJUST BRAKE PEDAL (See page BR-7)

8. DO OPERATIONAL CHECK (See page BR-18)

FRONT BRAKE PAD (2JZ-GTE)

BR0GQ-01

COMPONENTS

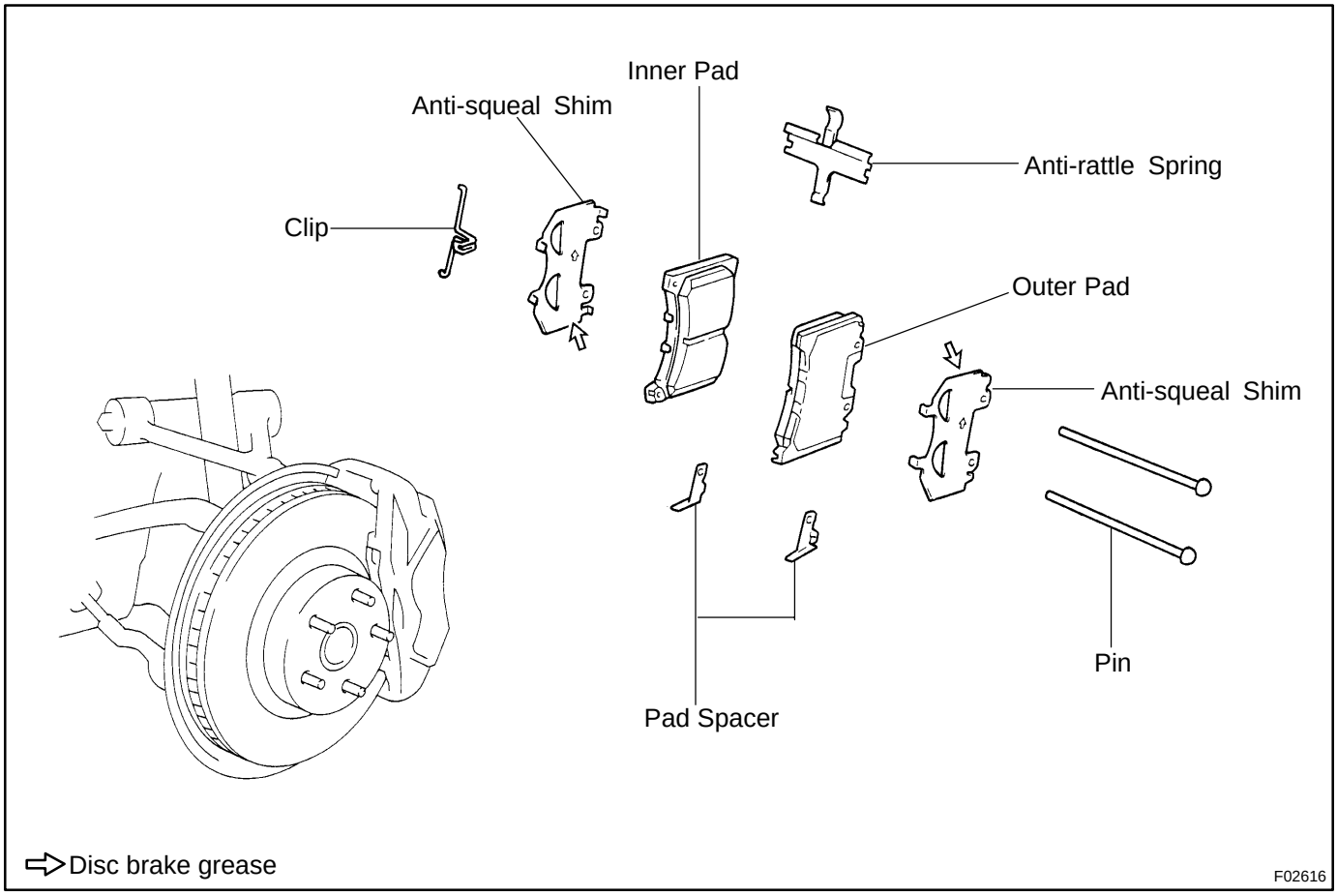

BR0GR-01

REPLACEMENT

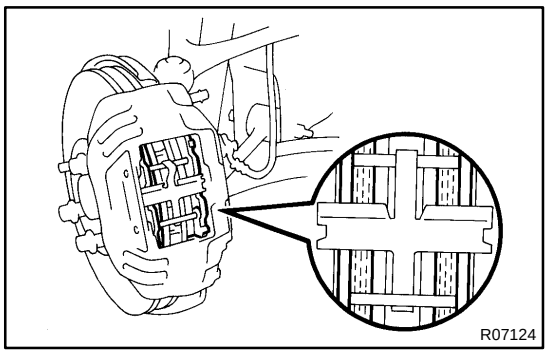

1. REMOVE FRONT WHEEL

Remove the wheel and temporarily fasten the disc with the hub nuts.

2. INSPECT PAD LINING THICKNESS

Check the pad thickness and replace pads if they are not within specification.

Minimum thickness: 1.0 mm (0.039 in.)

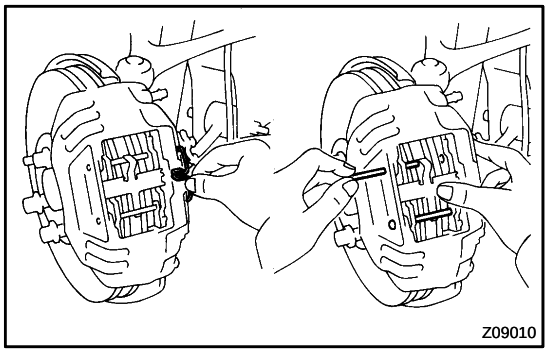

3. REMOVE THESE PARTS

(a) Clip and 2 pins
(b) Anti-rattle spring
(c) 2 pads
(d) 2 pad spacers
(e) 2 anti-squeal shims

NOTICE:

The anti-rattle spring, clip and pad spacers can be used again provided that they have sufficient rebound, no deformation, cracks or wear, and have had all rust, dirt and foreign particles cleaned off.

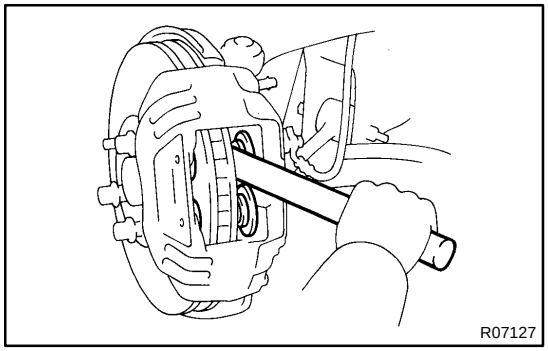

4. CHECK DISC THICKNESS AND RUNOUT

(See page BR-39)

5. INSTALL NEW PADS

NOTICE:

When replacing worn pads, the anti-squeal shims must be replaced together with the pads.

(a) Draw out a small amount of brake fluid from the reservoir.
(b) Press in the pistons with a hammer handle or equivalent.

HINT:

- Always change the pads on one wheel at a time as there is a possibility of the opposite piston flying out.
- If the piston is difficult to push in, loosen the bleeder plug and push in the piston while letting some brake fluid escape.

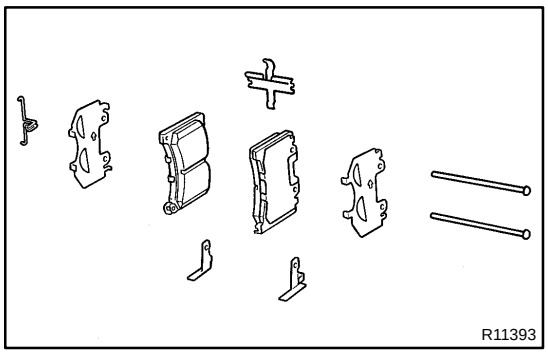

(c) Install the anti-squeal shim on each pad.

HINT:

- Place the pad wear indicator facing downward.
- Apply disc brake grease to inner side of the anti-squeal shims (See page BR-25).
- Make sure that the arrow on the shims points upward.

(d) Install a pad spacer on the lower side of the each pad.

(e) Install the 2 pads.

NOTICE:

Do not allow oil or grease to get on the rubbing face.

6. INSTALL ANTI-RATTLE SPRING AND 2 PINS

7. INSTALL CLIP

FRONT BRAKE CALIPER (2JZ-GTE)

BR0GY-02

COMPONENTS

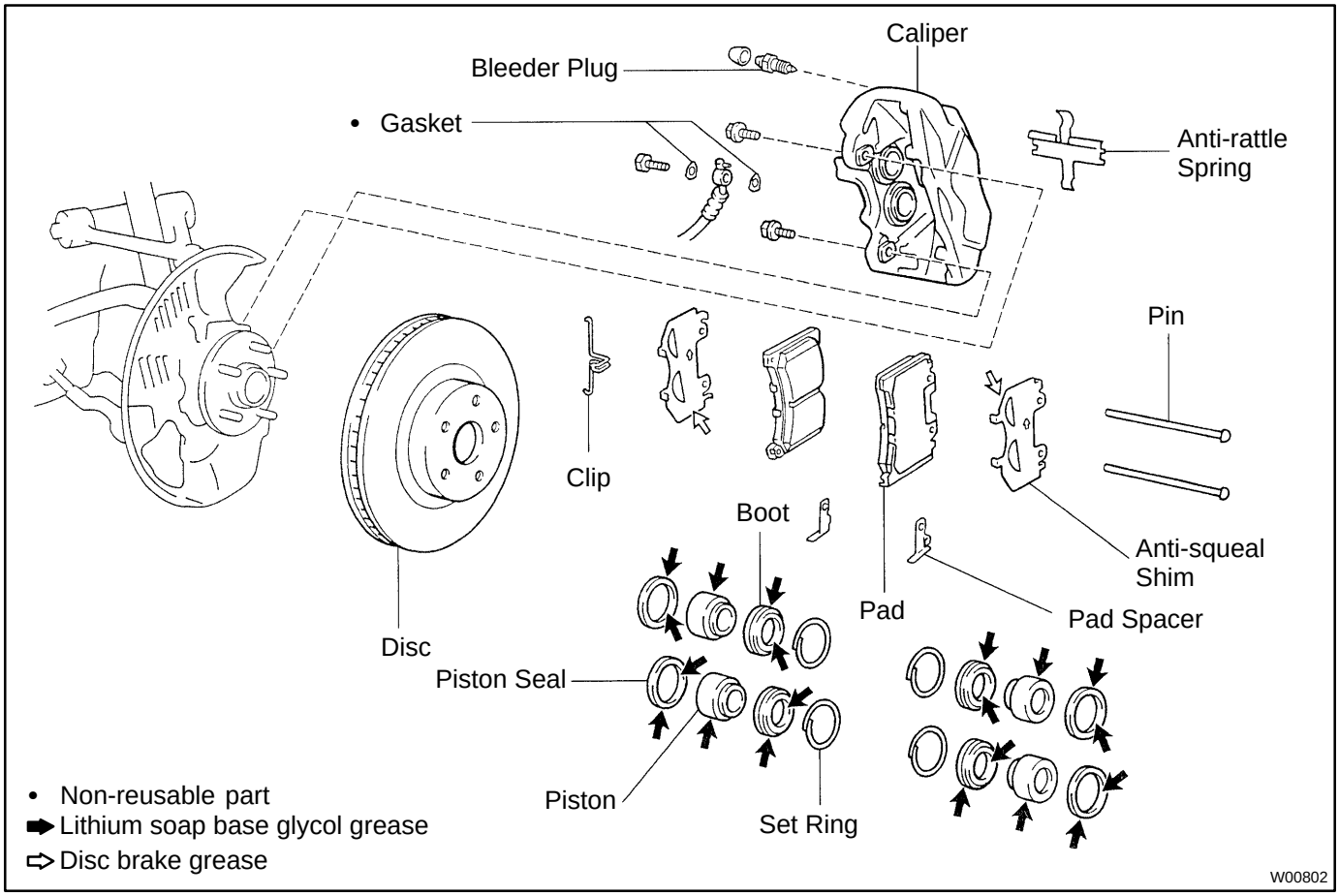

BR0GZ-01

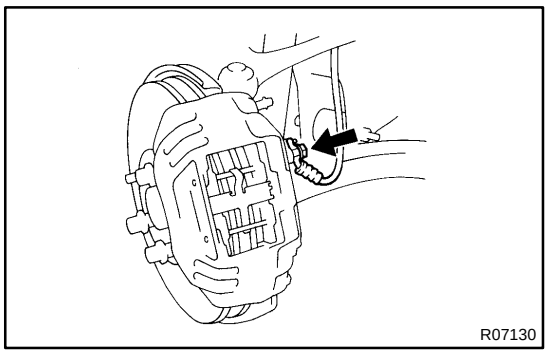
R07130

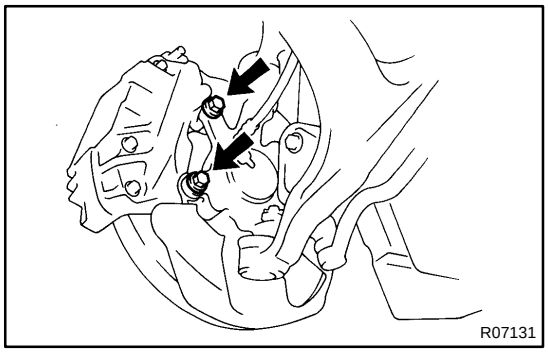
R07131

REMOVAL

1. REMOVE FRONT WHEEL

2. DISCONNECT FLEXIBLE HOSE

(a) Remove the union bolt and 2 gaskets from the caliper, then disconnect the flexible hose from the caliper.

Torque: 30 N·m (310 kgf·cm, 22 ft·lbf)

HINT:

At the time of installation, please refer to the following item.

Install the flexible hose lock securely in the lock hole in the caliper.

(b) Use a container to catch the brake fluid as it drains out.

3. REMOVE CALIPER

Remove the 2 mounting bolts and caliper.

Torque: 118 N·m (1,200 kgf·cm, 87 ft·lbf)

4. REMOVE THESE PARTS

(a) Clip and 2 pins

(b) Anti-rattle spring

(c) 2 pads

(d) 2 pad spacers and anti-squeal shims

BR0H0-01

DISASSEMBLY

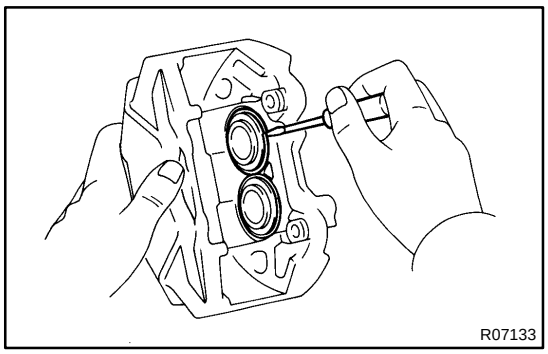

1. REMOVE CYLINDER BOOT SET RINGS AND BOOTS

Using a screwdriver, remove the 4 cylinder boot set rings and 4 boots.

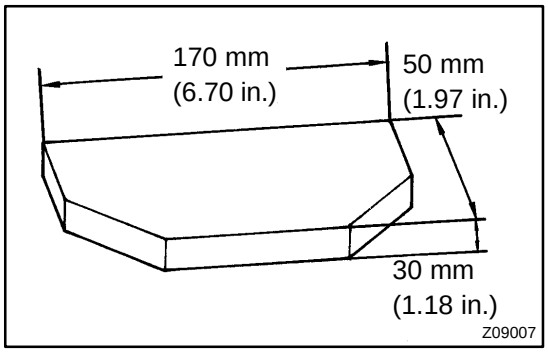

2. REMOVE PISTONS FROM CYLINDER

(a) Prepare a wooden plate to hold the pistons.

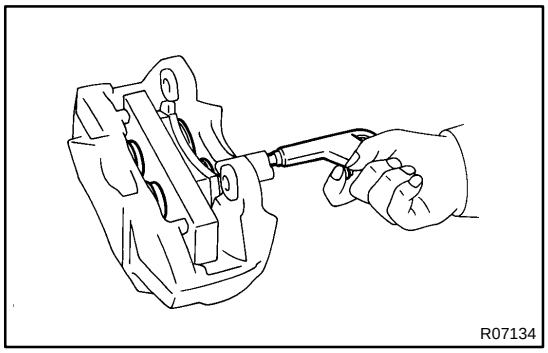

(b) Place the plate between the pistons and insert a pad on one side.

(c) Use compressed air to remove the pistons alternately from the cylinder.

CAUTION:

Do not place your fingers in front of the pistons when using compressed air.

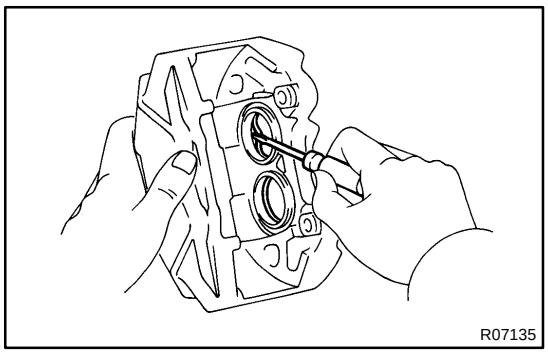

3. REMOVE PISTON SEALS

Using a screwdriver, remove the 4 piston seals from the cylinder.

BR0H1-01

INSPECTION

1. MEASURE PAD LINING THICKNESS
(See page BR-32)
Standard thickness: 12.0 mm (0.472 in.)
Minimum thickness: 1.0 mm (0.039 in.)

2. MEASURE DISC THICKNESS
(See page BR-32)
Standard thickness: 30.0 mm (1.181 in.)
Minimum thickness: 28.0 mm (1.102 in.)

3. MEASURE DISC RUNOUT
(See page BR-32)
Maximum disc runout: 0.05 mm (0.0020 in.)

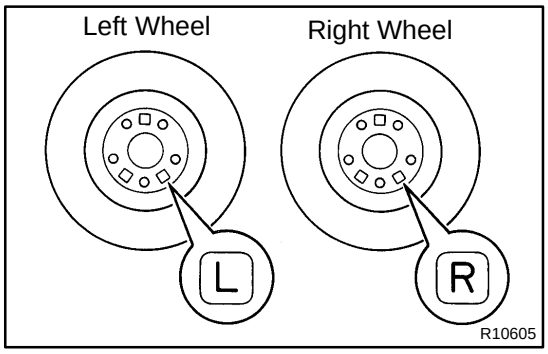

4. IF NECESSARY, ADJUST DISC RUNOUT
(See page BR-32)

HINT:

Install a disc marked with ”R” on the right wheel, and a disc marked with ”L” on the left wheel.

REAR BRAKE PAD (2JZ-GTE)

BR0H6-01

COMPONENTS

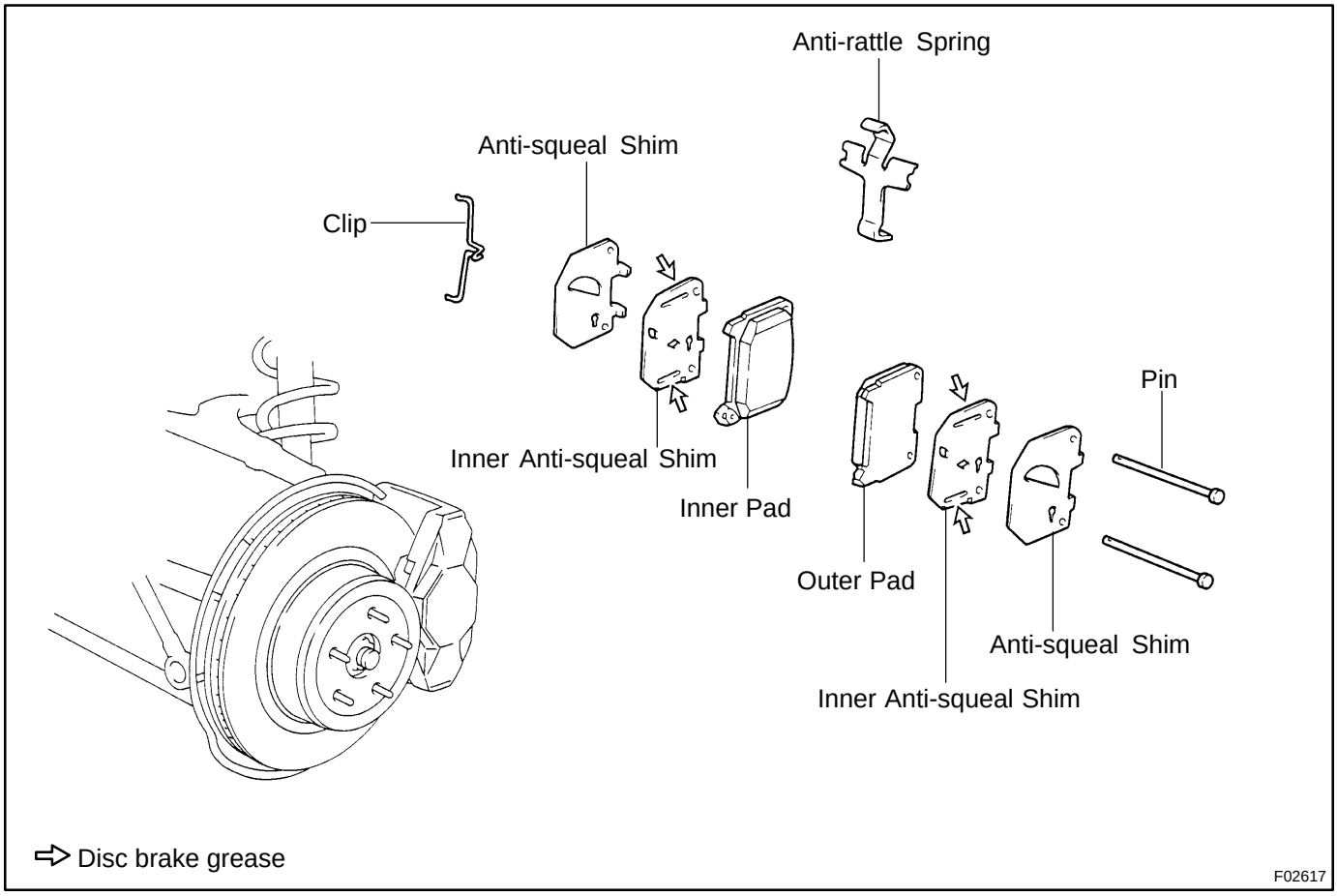

BR0H7-01

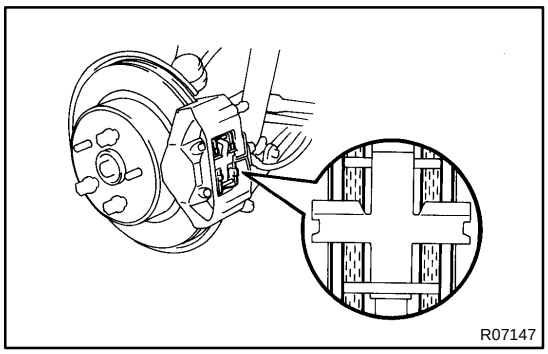

REPLACEMENT

1. REMOVE REAR WHEEL

Remove the wheel and temporarily fasten the disc with the hub nuts.

2. INSPECT PAD LINING THICKNESS

Check the pad thickness and replace pads if they are not within specification.

Minimum thickness: 1.0 mm (0.039 in.)

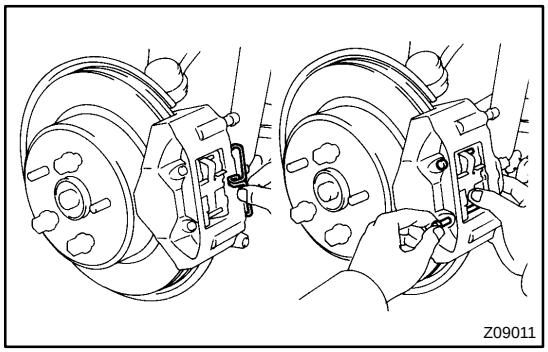

3. REMOVE THESE PARTS

(a) Clip and 2 pins
(b) Anti-rattle spring
(c) 2 pads
(d) 4 anti-squeal shims

NOTICE:

The anti-rattle springs and clip can be used again provided that they have sufficient rebound, no deformation, cracks or wear, and have had all rust, dirt and foreign particles cleaned off.

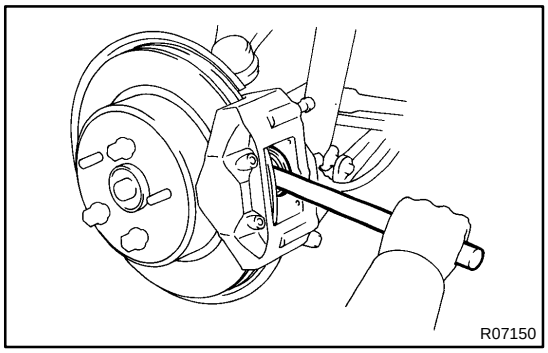

4. CHECK DISC THICKNESS AND RUNOUT

(See page BR-57)

5. INSTALL NEW PADS

NOTICE:

When replacing worn pads, the anti-squeal shims must be replaced together with the pads.

(a) Draw out a small amount of brake fluid from the reservoir.
(b) Press in the pistons with a hammer handle or equivalent.

HINT:

- Always change the pads on one wheel at a time as there is a possibility of the opposite piston flying out.
- If the piston is difficult to push in, loosen the bleeder plug and push in the piston while letting some brake fluid escape.

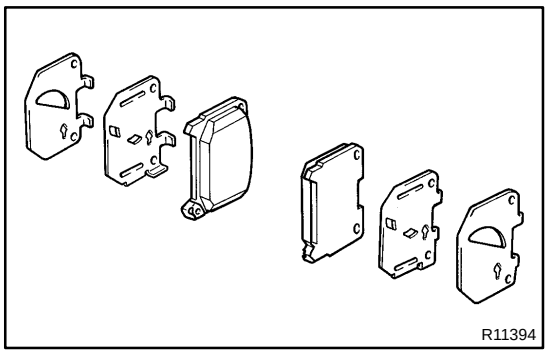

(c) Install the 2 anti-squeal shims on each pad.

HINT:

- Apply disc brake grease to both sides of the inner anti-squeal shim (See page BR-45).
- Make sure that the arrow on the shims points upward.

(d) Install the 2 pads with pad wear indicator plates facing downward.

NOTICE:

Do not allow oil or grease to get on the rubbing face.

6. INSTALL ANTI-RATTLE SPRING AND 2 PINS

7. INSTALL CLIP

REAR BRAKE CALIPER (2JZ-GTE)

COMPONENTS

BR0HE-02

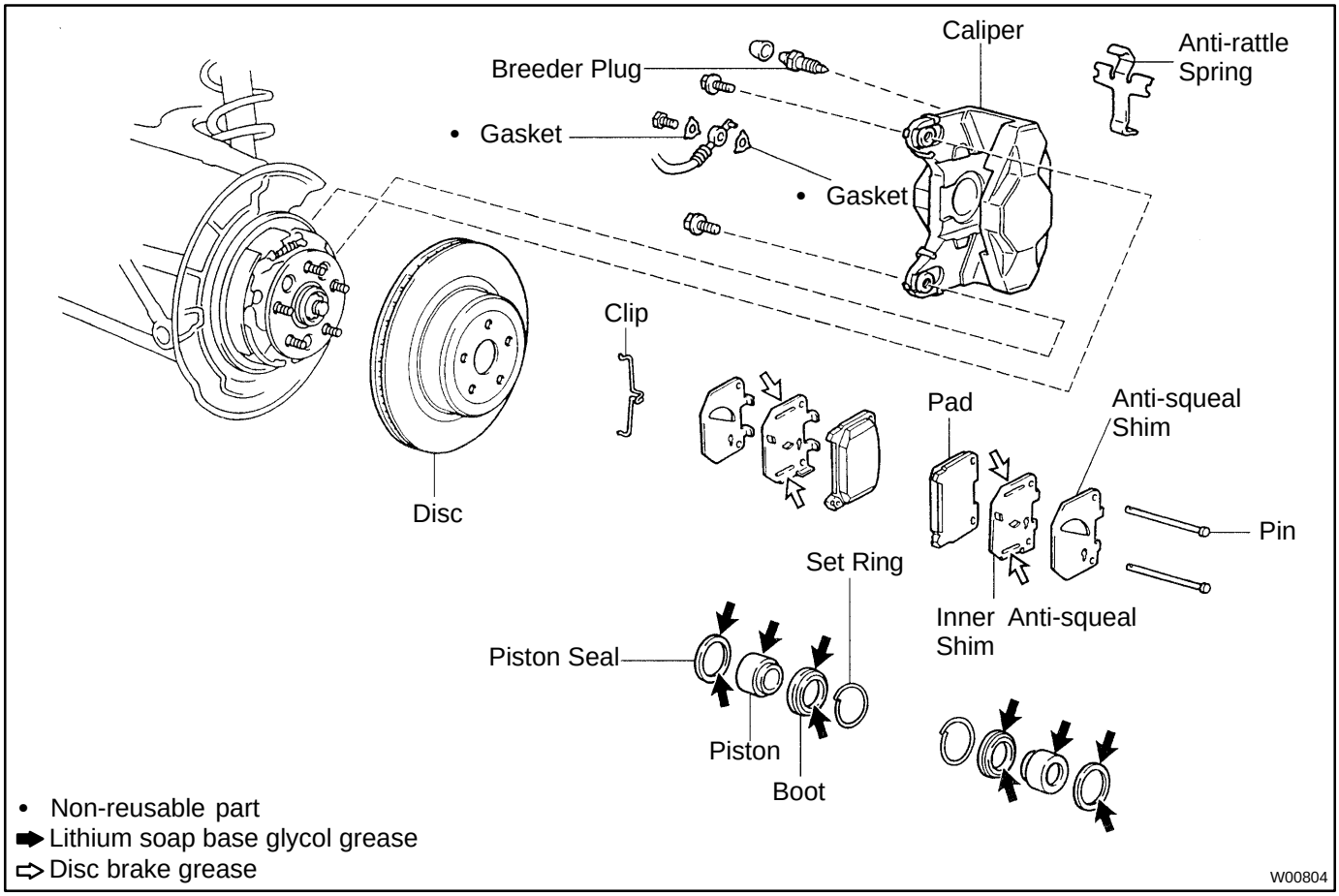

BR0HF-01

REMOVAL

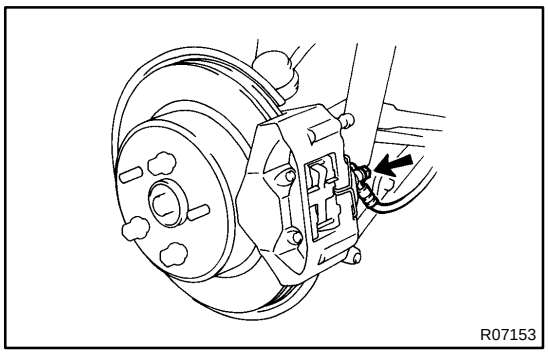
R07153

1. REMOVE REAR WHEEL

2. DISCONNECT FLEXIBLE HOSE

(a) Remove the union bolt and 2 gaskets from the caliper, then disconnect the flexible hose from the caliper.
Torque: 30 N·m (310 kgf·cm, 22 ft·lbf)

HINT:

At the time of installation, please refer to the following item.
Install the flexible hose lock securely in the lock hole in the caliper.

(b) Use a container to catch the brake fluid.

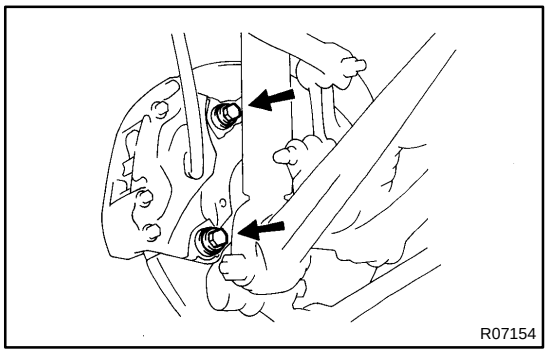
R07154

3. REMOVE CALIPER

Remove the 2 mounting bolts and caliper.
Torque: 104 N·m (1,065 kgf·cm, 77 ft·lbf)

4. REMOVE THESE PARTS

(a) Clip
(b) 2 pins
(c) Anti-rattle spring
(d) 2 pads
(e) 4 anti-squeal shims

BR0HG-01

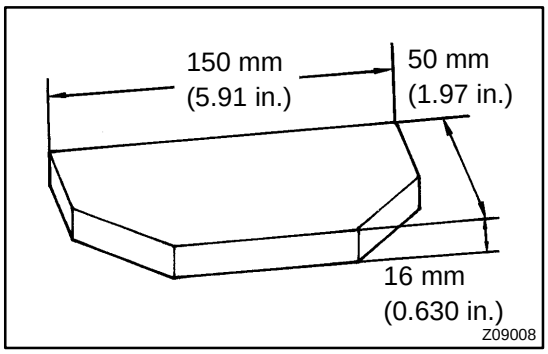

DISASSEMBLY

1. **REMOVE CYLINDER BOOT SET RINGS AND BOOTS**
   (See step 1 on page BR-38)
2. **REMOVE PISTONS FROM CYLINDER**
   (See step 2 on page BR-38)
3. **REMOVE PISTON SEALS**
   (See step 3 on page BR-38)

BR0HH-01

INSPECTION

1. MEASURE PAD LINING THICKNESS (See page BR-32)
   Standard thickness: 11.0 mm (0.433 in.)
   Minimum thickness: 1.0 mm (0.039 in.)
2. MEASURE DISC THICKNESS (See page BR-32)
   Standard thickness: 16.0 mm (0.630 in.)
   Minimum thickness: 15.0 mm (0.591 in.)
3. MEASURE DISC RUNOUT (See page BR-32)
   Maximum disc runout: 0.05 mm (0.0020 in.)
4. IF NECESSARY, ADJUST DISC RUNOUT (See page BR-32)

PARKING BRAKE

BR0HK-02

COMPONENTS

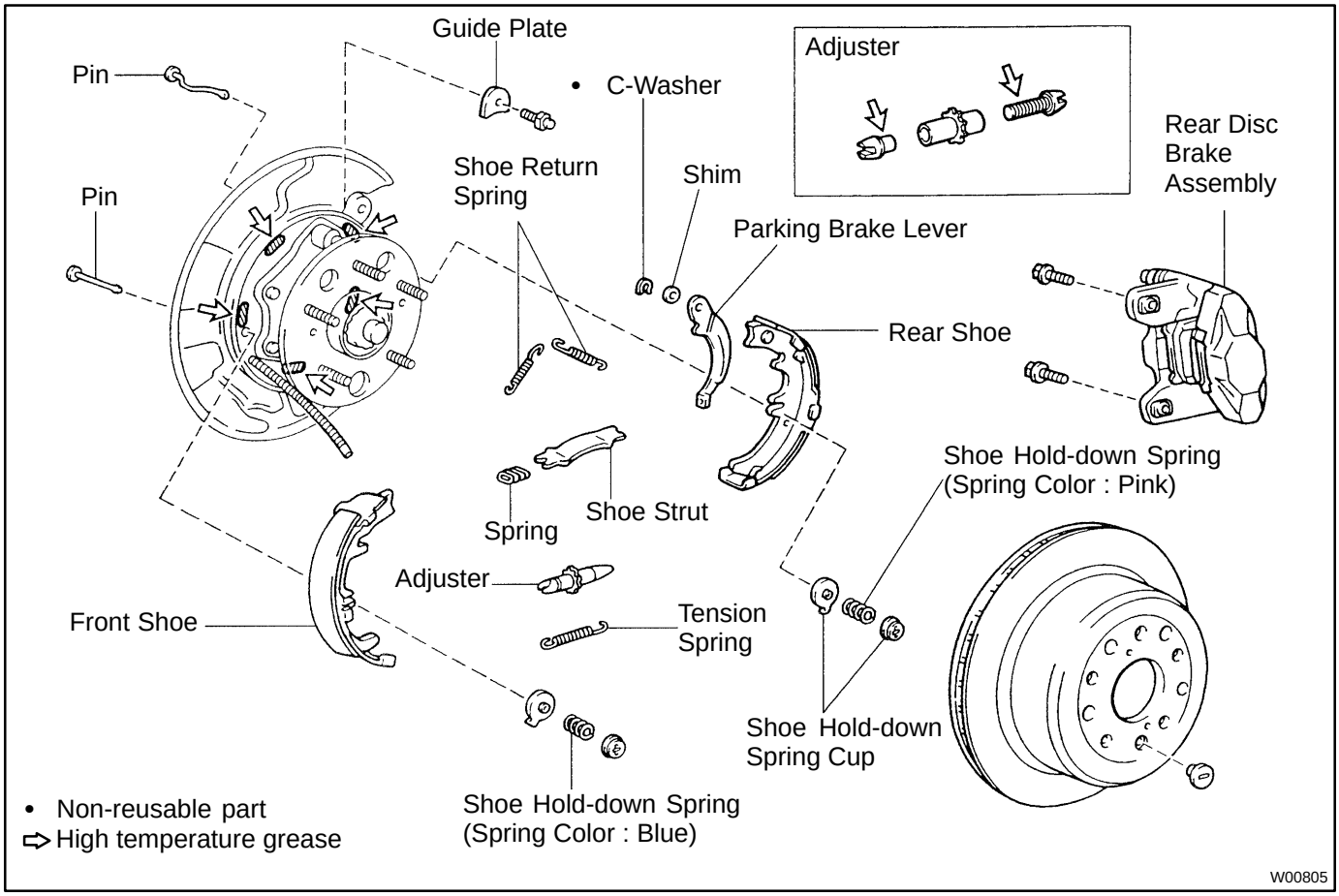

BR0HL-01

DISASSEMBLY

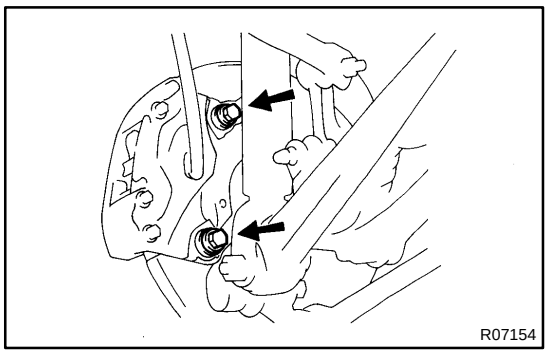

1. REMOVE REAR WHEEL

2. REMOVE REAR DISC BRAKE ASSEMBLY

(a) Remove the 2 mounting bolts and remove the disc brake assembly.

Torque: 104 N·m (1,065 kgf·cm, 77 ft·lbf)

(b) Suspend the disc brake securely and so the hose is not stretched.

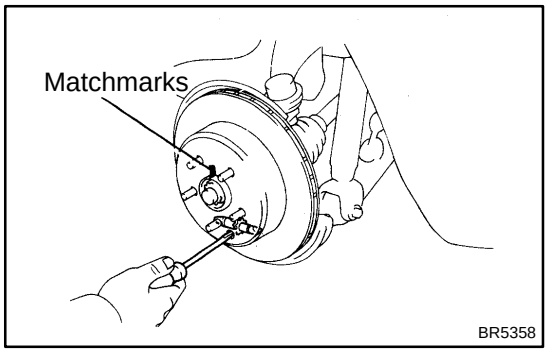

3. REMOVE DISC

(a) Place matchmarks on the disc and rear axle hub.

(b) Remove the disc.

HINT:

- If the disc cannot be removed easily, return the shoe adjuster until the disc turns freely.
- If there are no matchmarks, temporarily install the disc, then measure the disc runout and install the disc in the position (See step 4 on page BR-51).



4. REMOVE SHOE RETURN SPRINGS

Using needle-nose pliers, remove the 2 shoe return springs.

5. REMOVE SHOE STRUT WITH SPRING

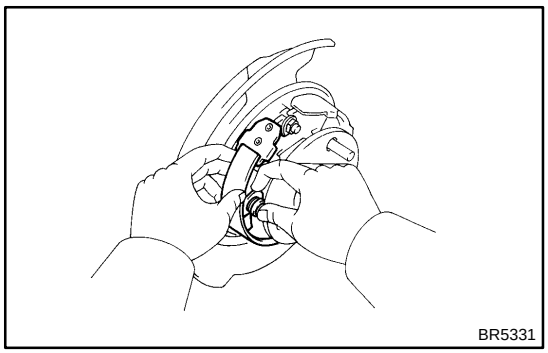

6. REMOVE FRONT SHOE, ADJUSTER AND TENSION SPRING

(a) Slide out the front shoe and remove the shoe adjuster.

(b) Disconnect the tension spring and remove the front shoe.

7. REMOVE REAR SHOE

(a) Slide out the rear shoe.

(b) Remove the tension spring from the rear shoe.

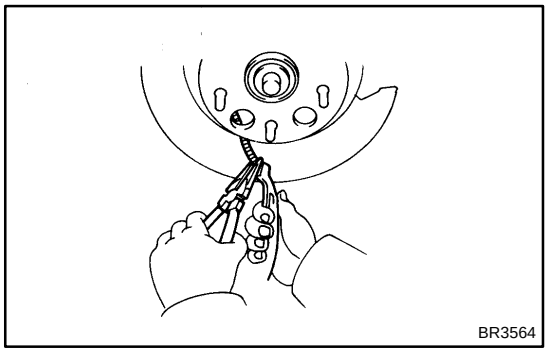

(c) Disconnect the parking brake cable from the parking brake shoe lever.

(d) Remove the shoe hold-down spring cups, springs and pins.

BR0HM-01

INSPECTION

1. INSPECT DISASSEMBLED PARTS

Inspect the disassembled parts for wear, rust or damage.

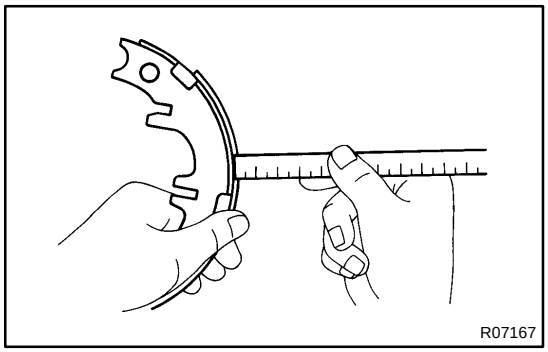

2. MEASURE BRAKE SHOE LINING THICKNESS

Using a ruler, measure the thickness of the shoe lining.

Standard thickness: 2.5 mm (0.098 in.)

Minimum thickness: 1.0 mm (0.039 in.)

If the lining thickness is at the minimum thickness or less, or if there is severe and uneven wear, replace the brake shoe.

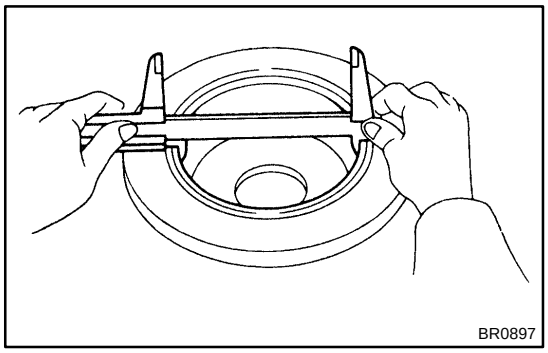

3. MEASURE BRAKE DISC INSIDE DIAMETER

Using a vernier calipers, measure the inside diameter of the disc.

Standard inside diameter: 190 mm (7.48 in.)

Maximum inside diameter: 191 mm (7.52 in.)

Replace the disc if the inside diameter is at the maximum value or more. Replace the disc or grind it on a lathe if the disc is badly scored or worn unevenly.

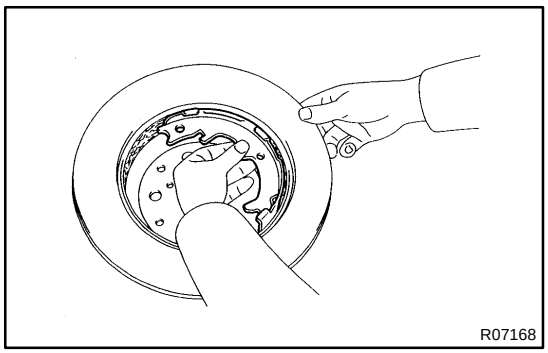

4. INSPECT PARKING BRAKE LINING AND DISC FOR PROPER CONTACT

Apply chalk to the inside surface of the disc, then grind down the brake shoe lining to fit. If the contact between the disc and the brake shoe lining is improper, repair it using a brake shoe grinder or replace the brake shoe assembly.

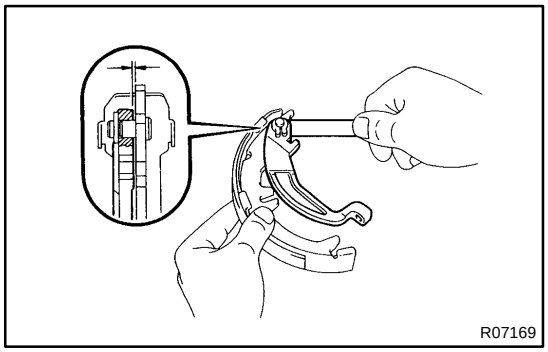

5. MEASURE CLEARANCE BETWEEN PARKING BRAKE SHOE AND LEVER

Using a feeler gauge, measure the clearance.

Standard clearance: Less than 0.35 mm (0.0138 in.)

If the clearance is not within the specification, replace the shim with one of the correct size.

Thickness mm(in.)	Thickness mm(in.)
0.3 (0.012)	0.9 (0.035)
0.6 (0.024)	

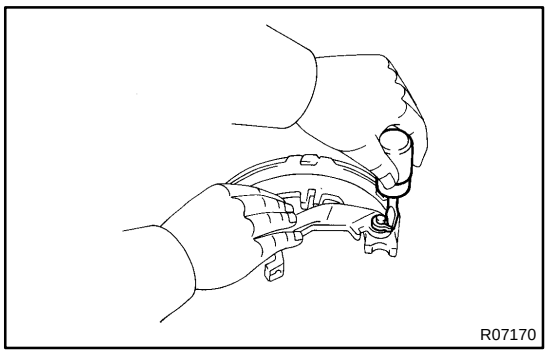

6. IF NECESSARY, REPLACE SHIM

(a) Using a screwdriver, remove the C-washer.

(b) Remove the shim and parking brake shoe lever, and install the correct sized shim.

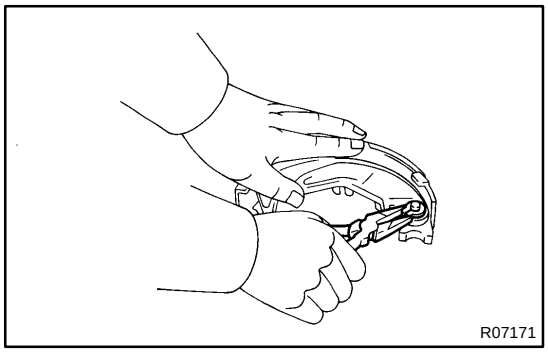

(c) Install the parking brake shoe lever with a new C-washer.

(d) Remeasure the clearance.

BR0HN-02

REASSEMBLY

Reassembly is in the reverse order of disassembly (See page BR-61).

HINT:

Apply high temperature grease to the parts indicated by the arrows (See page BR-60).

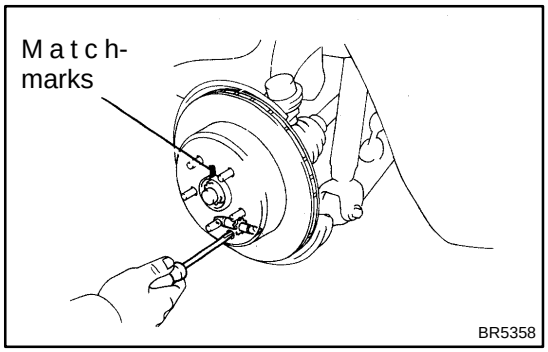

1. ADJUST PARKING BRAKE SHOE CLEARANCE

(a) Temporarily install the hub nuts.

(b) Remove the hole plug.

(c) Turn the adjuster and expand the shoes until the disc locks.

(d) Return the adjuster 8 notches.

(e) Install the hole plug.

2. SETTLING PARKING BRAKE SHOES AND DISC

(a) Drive the vehicle at about 50 km/h (31 mph) on a safe, level and dry road.

(b) With the parking brake release button pushed in, pull on the lever with 88 N (9 kgf, 19.8 lbf) of force.

(c) Drive the vehicle for about 400 meters (0.25 mile) in this condition.

(d) Repeat this procedure 2 or 3 times.

3. CHECK AND ADJUST PARKING BRAKE LEVER TRAVEL (See page BR-9)

PROPORTIONING AND BY-PASS VALVE (P & B VALVE)

BR0HO-02

ON-VEHICLE INSPECTION

1. INSTALL LSPV GAUGE (SST) AND BLEED AIR

SST 09709-29017

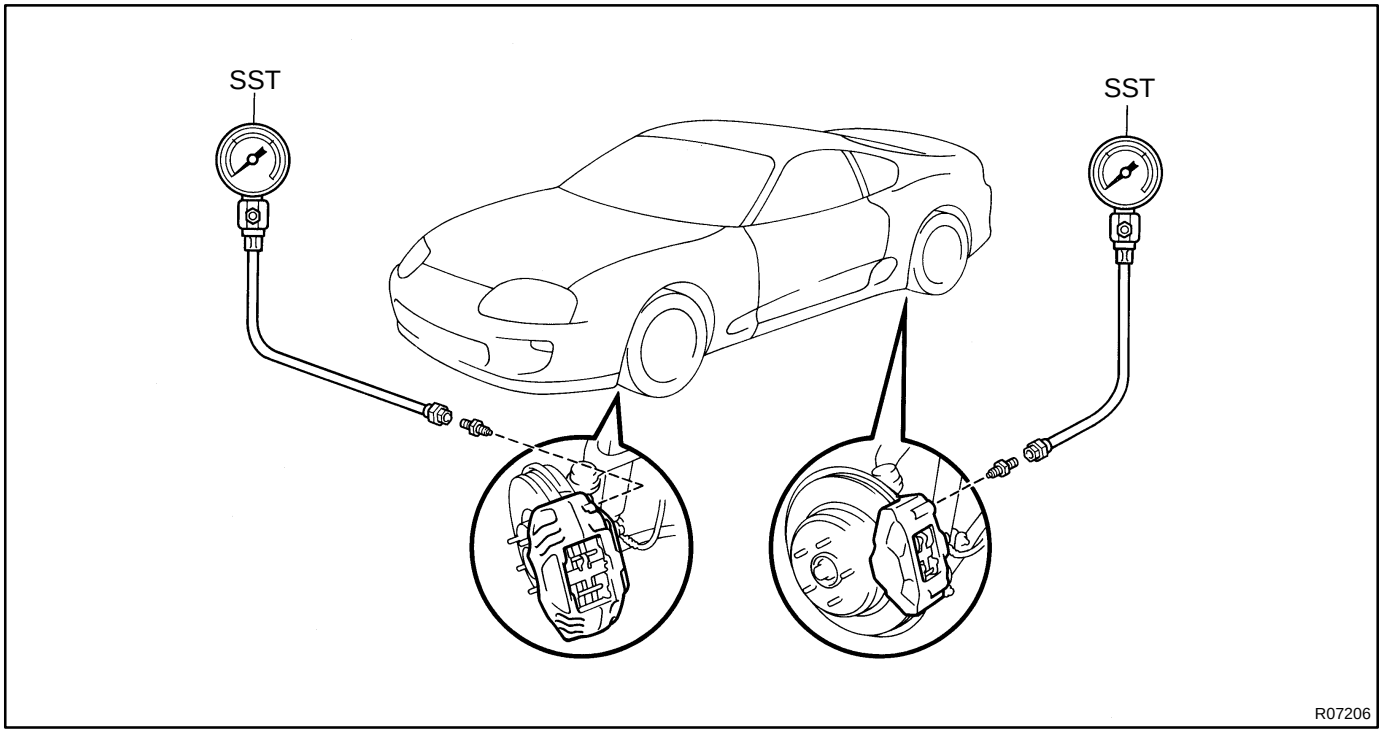

2. RAISE MASTER CYLINDER PRESSURE AND CHECK REAR BRAKE CALIPER PRESSURE

3. INSTALL LSPV GAUGE (SST) AND BLEED AIR

SST 09709-29017

4. RAISE MASTER CYLINDER PRESSURE AND CHECK REAR BRAKE CALIPER PRESSURE

2JZ-GE Engine:

Master cylinder pressure	Rear brake caliper pressure
2,942 kPa (30 kgf/cm^2, 427 psi)	2,942 kPa (30 kgf/cm^2, 427 psi)
7,845 kPa (80 kgf/cm^2, 1,138 psi)	4,756 kPa (48.5 kgf/cm^2, 690 psi)

2JZ-GTE Engine:

Master cylinder pressure	Rear brake caliper pressure
2,452 kPa (25 kgf/cm^2, 356 psi)	2,452 kPa (25 kgf/cm^2, 356 psi)
7,845 kPa (80 kgf/cm^2, 1,138 psi)	4,452 kPa (45.4 kgf/cm^2, 646 psi)

If the rear brake caliper pressure is incorrect, replace the master cylinder.

5. BLEED BRAKE SYSTEM (See page BR-5)

6. CHECK FOR FLUID LEAKAGE

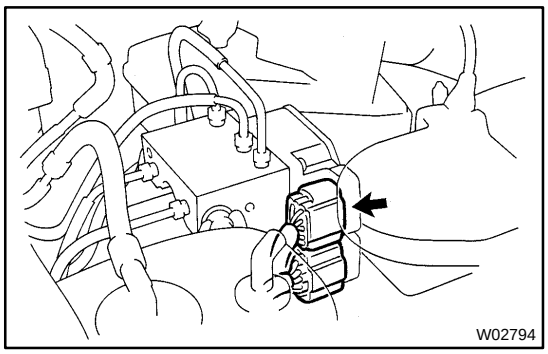

ABS ACTUATOR (2JZ-GTE)

BR0HT-02

ON-VEHICLE INSPECTION

HINT:

Using the ABS actuator checker (SST), check the operation of the actuator. If the actuator does not operate, check the operation of sub-wire harness G according to instructions on pages DI-509 .. If the solenoid and/or pump motor relay are abnormal, replace the relay and inspect the actuator operation again.

1. INSPECT BATTERY POSITIVE VOLTAGE

Battery positive voltage: 10-14 V

2. DISCONNECT 2 CONNECTORS FROM ACTUATOR

3. CONNECT ACTUATOR CHECKER (SST) TO ACTUATOR

(a) Connect the actuator checker (SST) to the actuator side wire harnesses via the sub-wire harnesses (SST), as shown.

SST 09990-00150, 09990-00250, 09990-00300, 09990-00360

(b) Connect the red cable of the checker to the battery positive (+) terminal and black cable to the negative (-) terminal. Connect the black cable of the sub-wire harnesses to the battery negative (-) terminal or body ground.

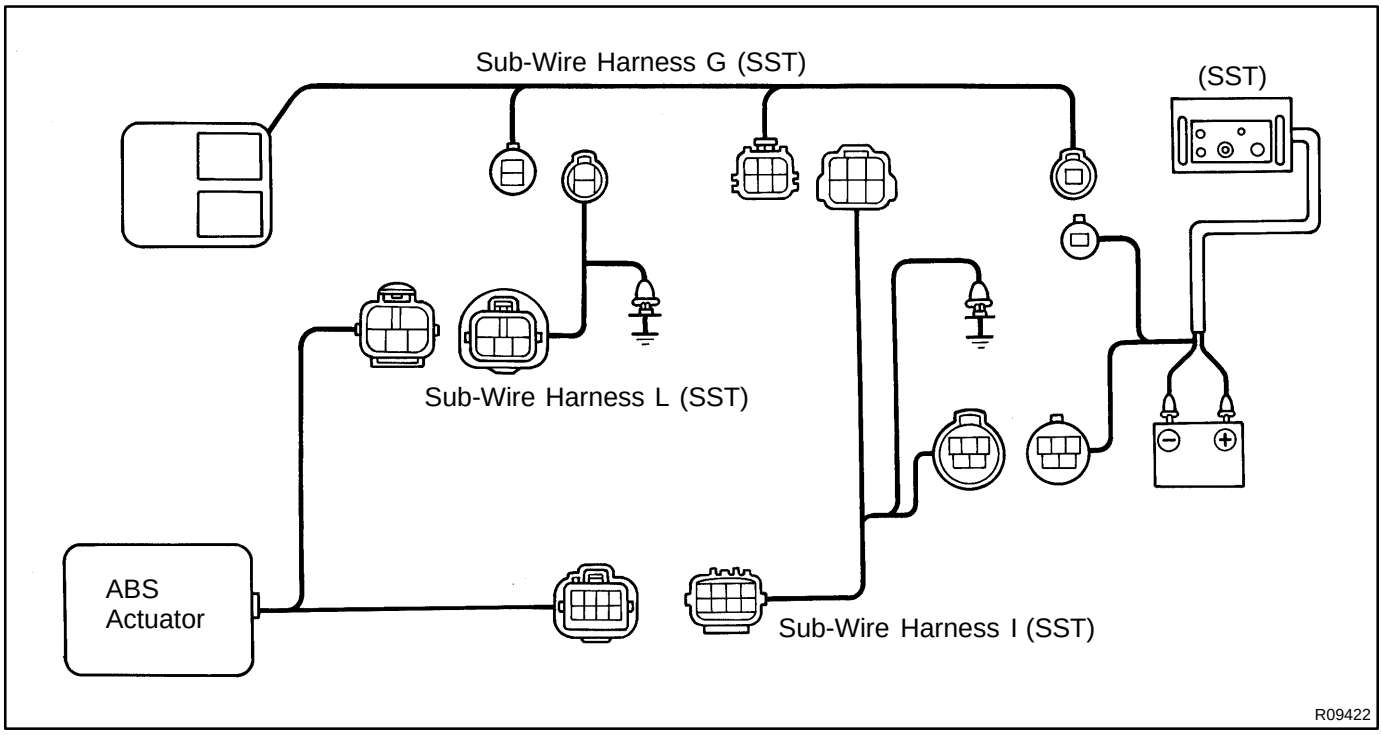

(c) Place the "SHEET N" (SST) on the actuator checker.
SST 09990-00410

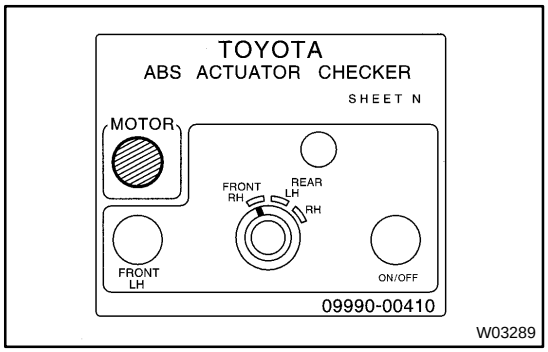

4. INSPECT BRAKE ACTUATOR OPERATION OF FRONT LH WHEEL

(a) Start the engine, and run it at idle.

(b) Turn the selector switch of the actuator checker to "FRONT RH" position.

(c) Push and hold in the MOTOR switch for a few seconds. Make sure that you can hear the motor running.

(d) Depress the brake pedal and hold it for about 15 seconds, and check that the pedal does not go down.

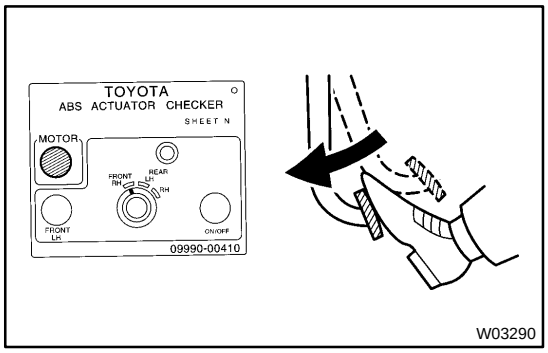

(e) With your foot still applying onto the brake pedal, push MOTOR switch and check that the brake pedal does not pulsate.

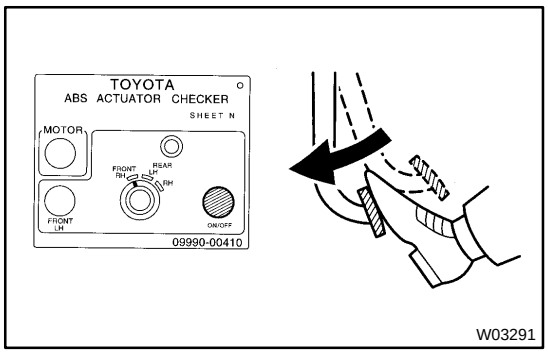

(f) Depress the brake pedal and hold it. As you hold the pedal down, push and hold in the MAIN push switch for a few seconds. Check that the pedal does not go down.

NOTICE:

Do not keep pushing the MAIN push switch more than 10 seconds.

(g) With your foot still applying onto the brake pedal, release the MAIN push switch and check that the pedal goes down.

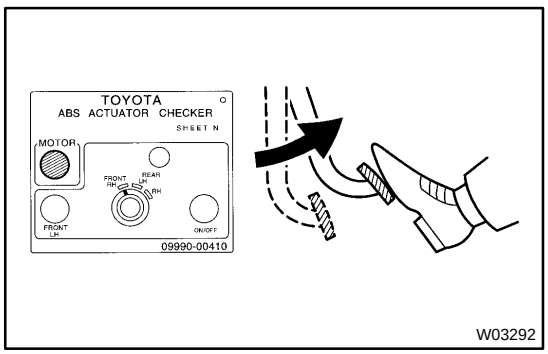

(h) With your foot still applying onto the brake pedal, push the MOTOR switch and check that the brake pedal returns.

(i) Release the brake pedal.

5. INSPECT FOR OTHER WHEEL

(a) Turn the selector switch to the "REAR LH" position, and inspect the "REAR LH" wheel.

(b) Repeating (c) to (i) in the step 4, check the actuator operation similarly.

(c) Similarly, inspect the ”REAR RH” and ”FRONT RH” wheel.

HINT:

When inspecting the ”FRONT RH” wheel, push the FRONT LH switch instead of the MAIN push switch. This makes it possible to inspect wherever the selector switch position indicates.

6. PUSH MOTOR SWITCH

(a) Push and hold in the MOTOR switch for a few seconds.

(b) Stop the engine.

7. DISCONNECT ACTUATOR CHECKER (SST) FROM ACTUATOR

(a) Disconnect the actuator checker (SST) and sub-wire harnesses (SST) from the actuator.

SST 09990-00150, 09990-00250, 09990-00300, 09990-00360, 09990-00410

(b) Connect the 2 actuator connectors.

(c) Clear the DTC (See page DI-442).

BR1AY-01

COMPONENTS

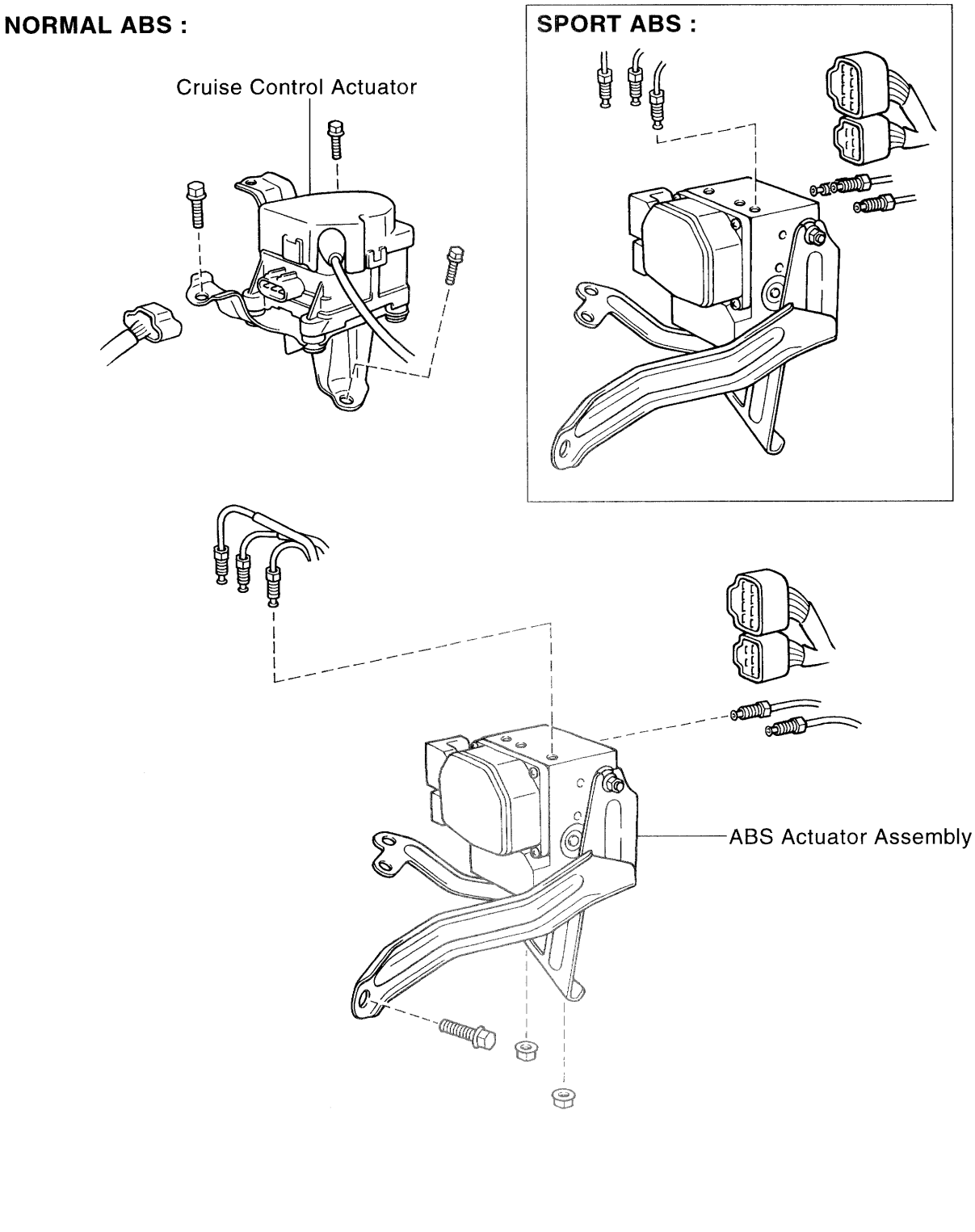

W02804

SPORT ABS:

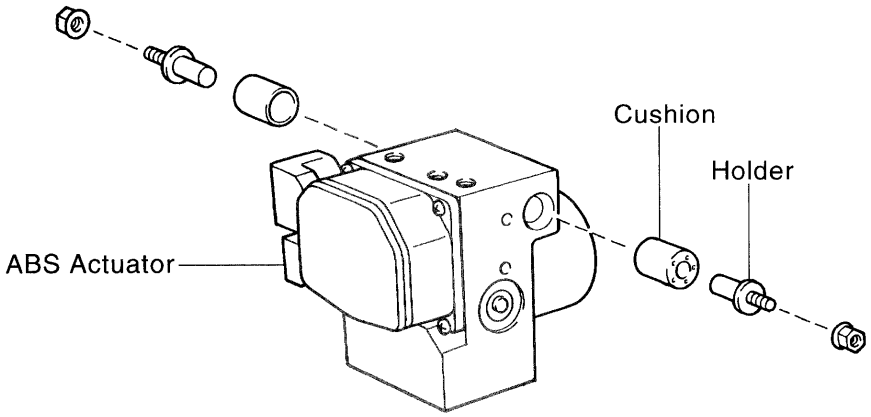

NORMAL ABS:

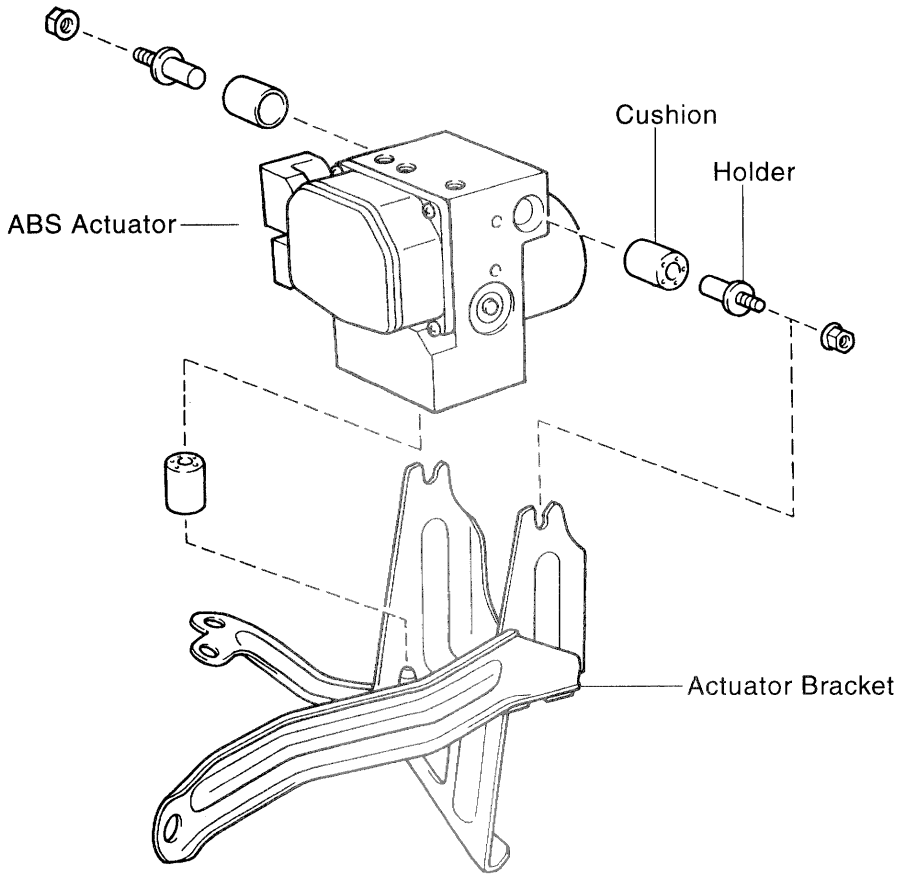

W02805

BR0HV-02

REMOVAL

1. REMOVE CRUISE CONTROL ACTUATOR

(a) Disconnect the connector from the cruise control actuator.

(b) Remove the 3 bolts and cruise control actuator.
Torque: 19 N·m (195 kgf·cm, 14 ft·lbf)

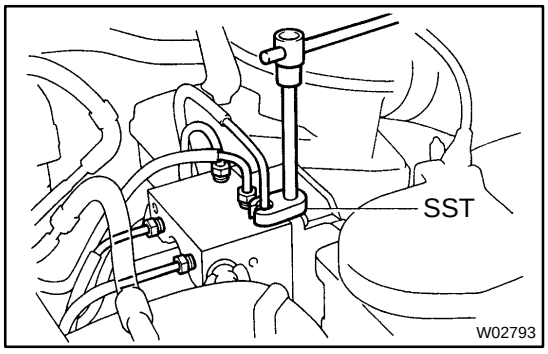

2. DISCONNECT BRAKE LINES

Using SST, disconnect the 6 brake lines from the ABS actuator.
SST 09023-00100
Torque: 15 N·m (155 kgf·cm, 11 ft·lbf)

3. DISCONNECT CONNECTORS

Disconnect the 2 connectors and wire harness clamp from the bracket.

4. REMOVE ABS ACTUATOR ASSEMBLY

Remove the bolt, 2 nuts and ABS actuator assembly.
Torque: 19 N·m (195 kgf·cm, 14 ft·lbf)

5. REMOVE ABS ACTUATOR

(a) Remove the 2 nuts and actuator from bracket.
Torque: 5.4 N·m (55 kgf·cm, 48 in.·lbf)

(b) Remove the 2 cushion bolts and 3 cushions.

FRONT SPEED SENSOR

BR0HX-02

COMPONENTS

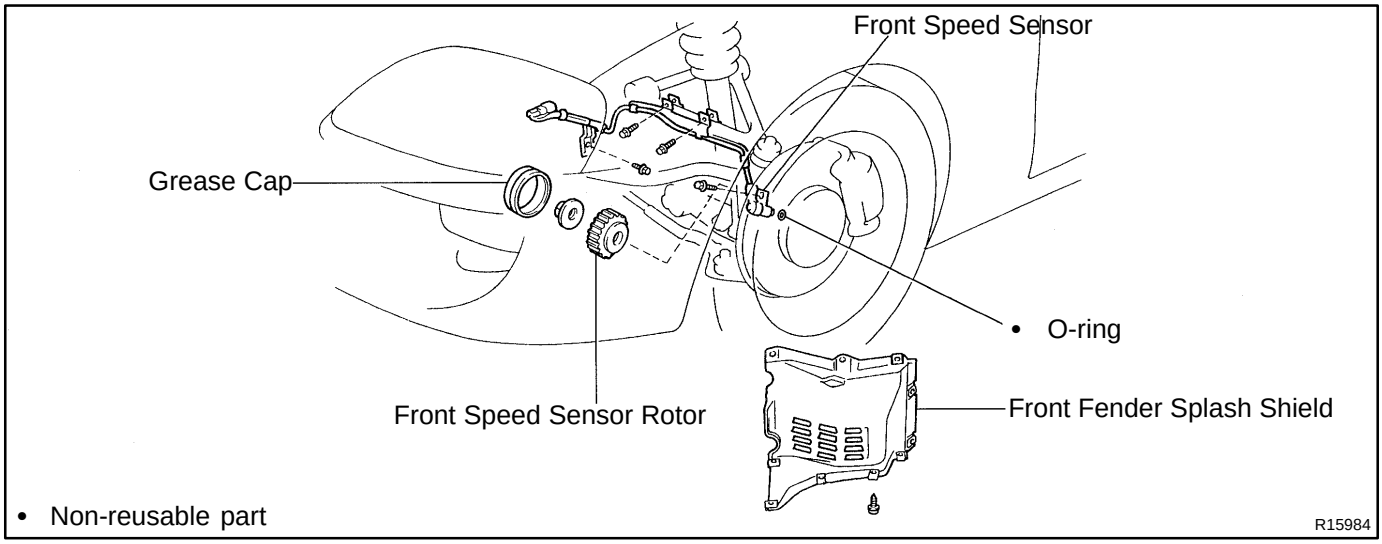

BR0HY-01

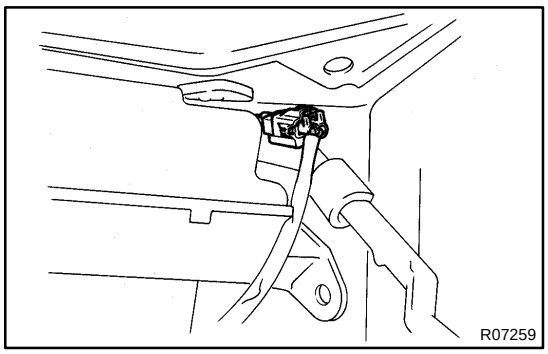

REMOVAL

1. DISCONNECT CONNECTOR

(a) Remove the front fender splash shield.

(b) Disconnect the speed sensor connector.

2. REMOVE SPEED SENSOR

(a) Remove the 3 clamp bolts holding the sensor harness to the body and upper suspension arm.
Torque: 5.4 N·m (55 kgf·cm, 48 in.·lbf)

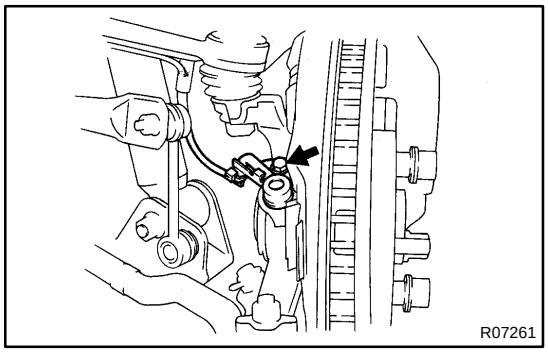

(b) Remove the speed sensor from the steering knuckle.
Torque: 7.8 N·m (80 kgf·cm, 69 in.·lbf)

(c) Remove the O-ring from the speed sensor.

REAR SPEED SENSOR

BR0I0-02

COMPONENTS

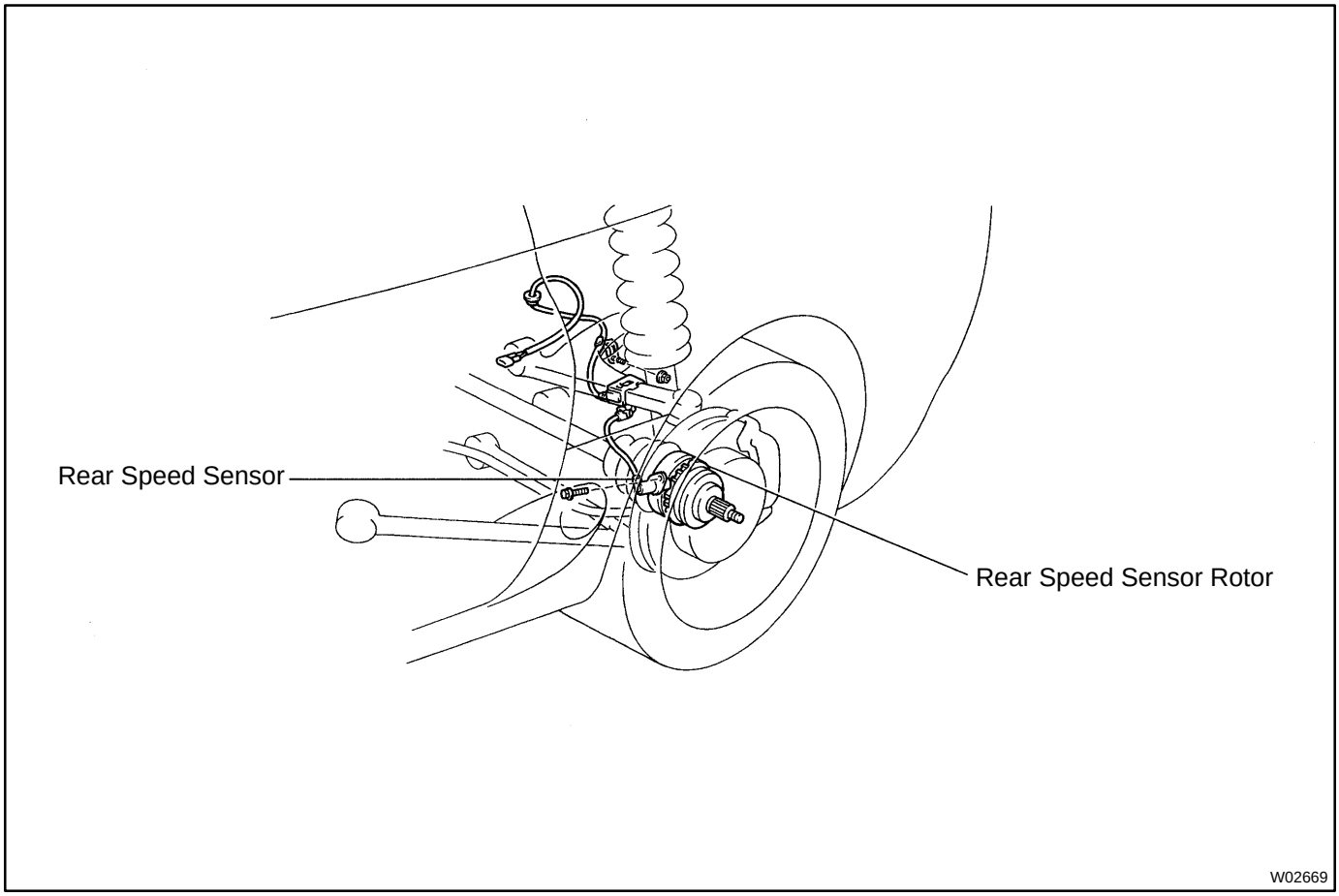

BR0I1-01

REMOVAL

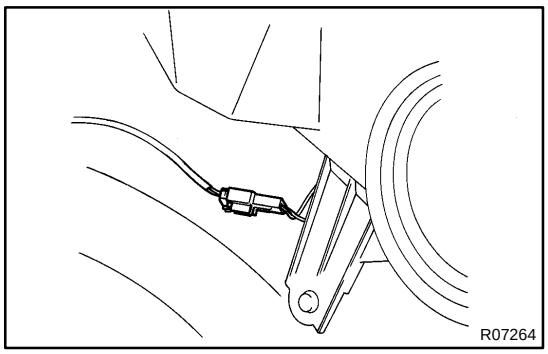

1. DISCONNECT SPEED SENSOR CONNECTOR

(a) Remove the rear seat cushion and seatback.
(b) Remove the quarter trim panel.
(c) Disconnect the speed sensor connector, and pull out the sensor wire harness with the grommet.

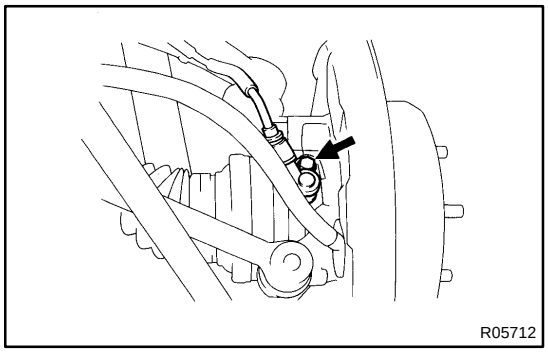

2. REMOVE SPEED SENSOR

(a) Remove the nut holding the sensor wire harness to the body.
Torque: 5.4 N·m (55 kgf·cm, 48 in.·lbf)
(b) Remove the clamp from the upper arm.
(c) Remove the speed sensor from the axle carrier.
Torque: 7.8 N·m (80 kgf·cm, 69 in.·lbf)

FOREWORD

This repair manual has been prepared to provide information on the repair methods (including cutting and welding operations, but excluding painting) for collision-damaged body components of the TOYOTA SUPRA.

Applicable models: JZA80 series

This manual consists of body repair methods, exploded diagrams and illustrations of the body components and other information relating to body panel replacement such as handling precautions, etc. However, it should be noted that the front fenders of the TOYOTA models are bolted on and require no welding.

Body construction will sometimes differ depending on specifications and country of destination. Therefore, please keep in mind that the information contained herein is based on vehicles for general destinations.

For the repair procedures and specifications other than collisiondamaged body components of the TOYOTA SUPRA refer to the following repair manuals.

Manual Name	Pub. No.
(USA and CANADA)	
• SUPRA Repair Manual	M/Y Version
• Supra Electrical Wiring Diagram Manual	M/Y Version
• 1/2 SUPRA New Car Features (Models except USA and CANADA)	NCF096U
• SUPRA Chassis and Body Repair Manual	RM344E
• Supra Electrical Wiring Diagram Manual	EWD175Y
• SUPRA New Car Features (All Countries)	NCF097E
• Fundamental Painting Procedures	BRM024E
• Fundamental Body Repair Procedures	BRM002E

If you require the above manuals, please contact your TOYOTA Dealer.

All information contained in this manual is the most up-to-date at the time of publication. However, specifications and procedures are subject to change without prior notice.

TOYOTA MOTOR CORPORATION

HOW TO USE THIS MANUAL

Each repair method description provided in Section RE of this manual comprises two pages, divided into 2 blocks (REMOVAL AND INSTALLATION) and includes illustrations to facilitate body repair.

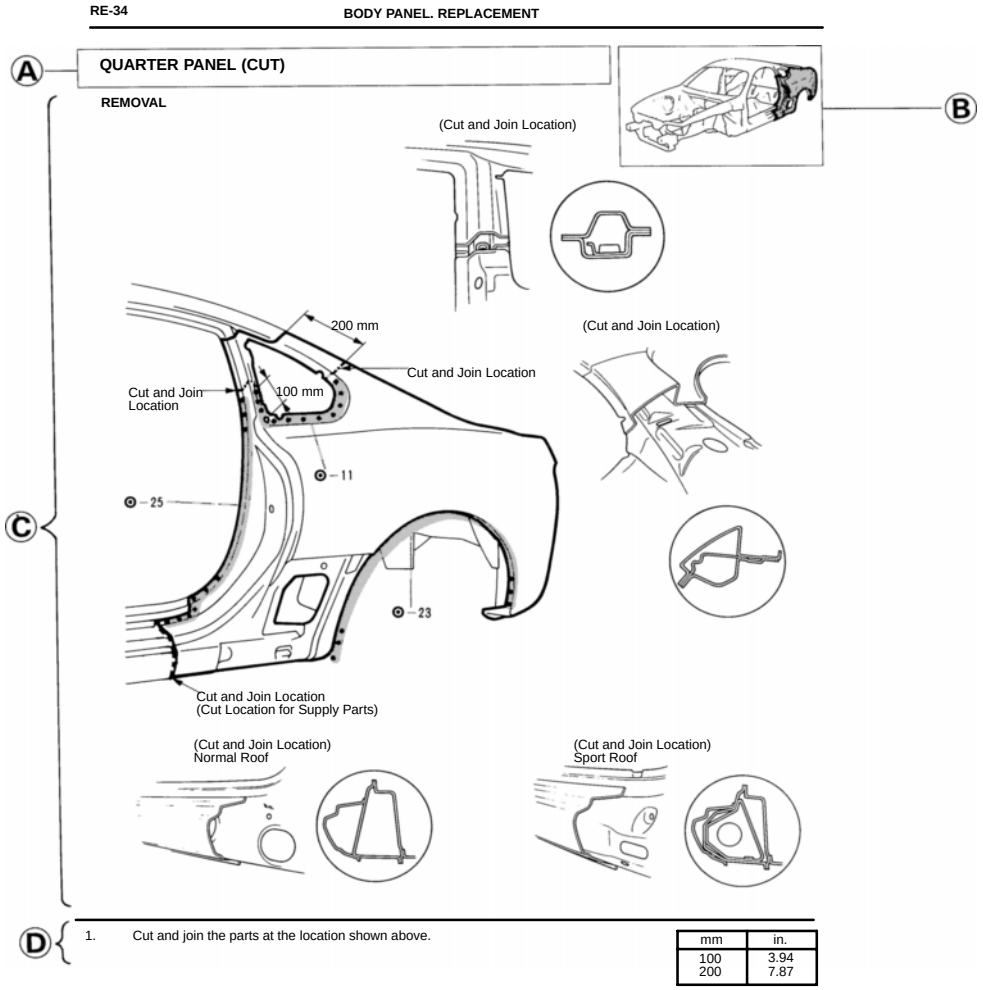

Ⓐ : REPLACEMENT PARTS AND METHOD

QUARTER PANEL (CUT)

- Replacement method
  - (ASSY) . . . . . Assembly replacement
  - (CUT) . . . . . Major cutting (less than 1/2 of parts used)
  - (CUT-H) . . . . Half cutting (about 1/2 of parts used)
  - (CUT-P) . . . . Partial cutting (most of parts used)
- Replacement parts

Ⓑ : PARTS LOCATION

Ⓒ : REMOVAL DIAGRAM
Describes in detail removal of the damaged parts involving repair by cutting.

Ⓓ : REMOVAL GUIDE
Provides additional information to more efficiently help you perform the removal.

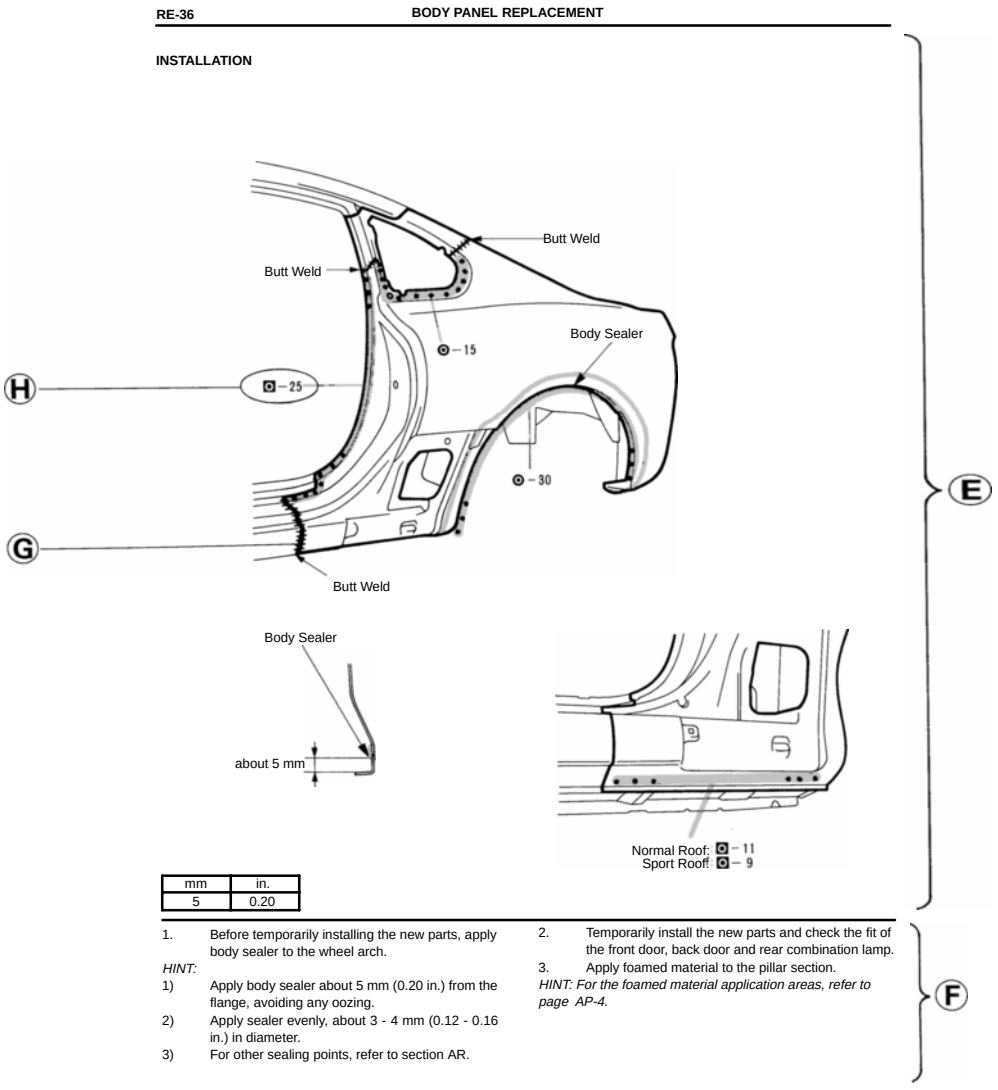

Ⓔ : **INSTALLATION DIAGRAM**
Describes in detail installation of the new parts involving repair by welding and/or cutting, but excluding painting.

Ⓕ : **INSTALLATION GUIDE**
Provides additional information to more efficiently help you perform the installation.

Ⓖ : **SYMBOLS**
See page IN-4 .

Ⓗ : **ILLUSTRATION OF WELD POINTS**
Weld method and panel position symbols.
See page IN-5 .

SYMBOLS

The following symbols are used in the welding Diagrams in Section RE of this manual to indicate cutting areas and the types of weld required.

SYMBOLS	MEANING	ILLUSTRATION
	SAW CUT OR ROUGH CUT	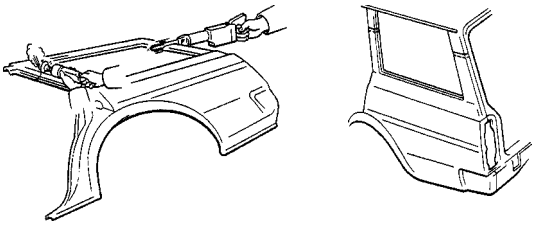
	REMOVE BRAZE	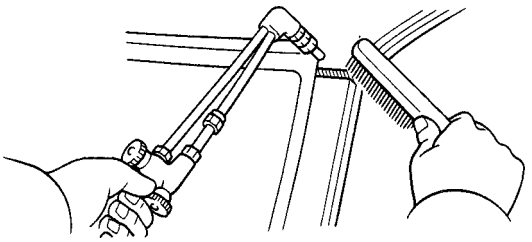
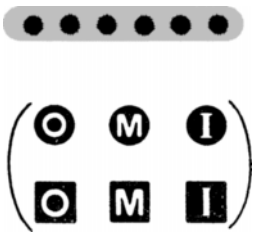	WELD POINTS SPOT WELD OR MIG PLUG WELD (See page IN-5)	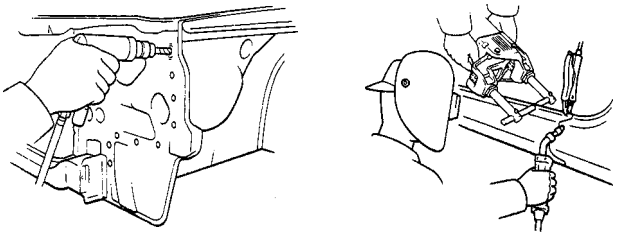
	CONTINUOUS MIG WELD (BUTT WELD OR TACK WELD)	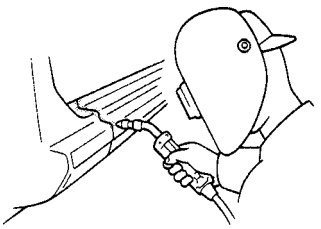
	BRAZE	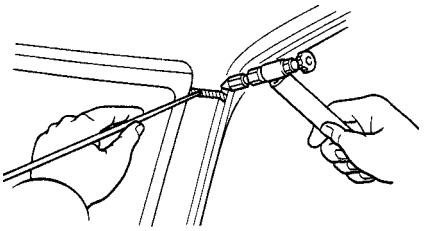
	BODY SEALER	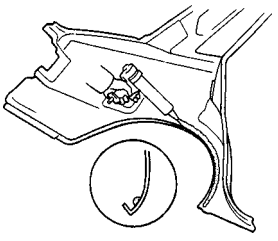

Illustration of Weld Point Symbols

EXAMPLE:

REMOVAL

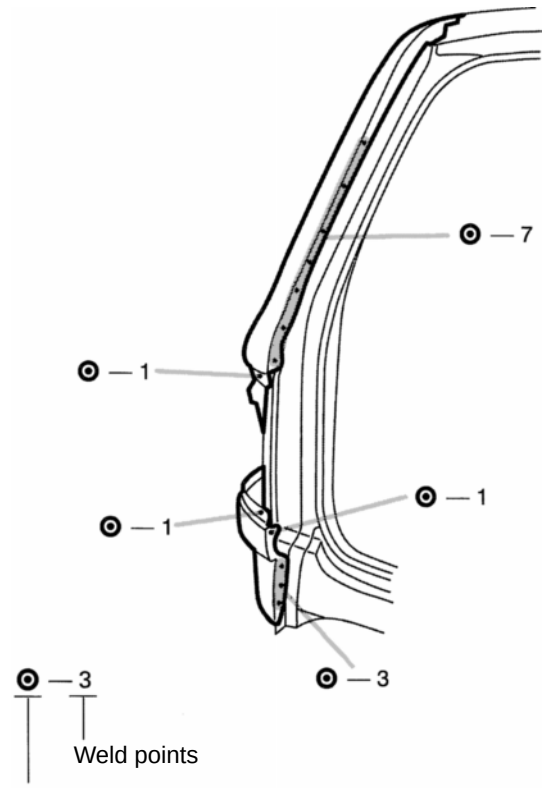

INSTALLATION

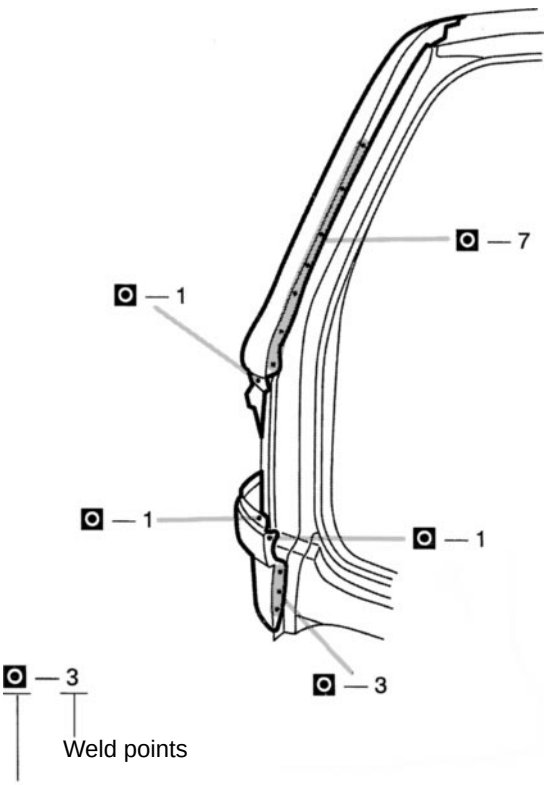

SYMBOL	MEANING	ILLUSTRATION
O M I	Remove Weld Points	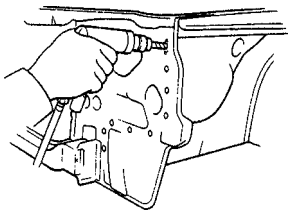
O	(Outside)	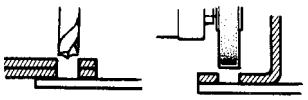
M	(Middle)	
I	(Inside)	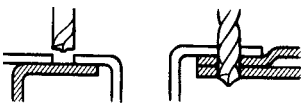
HINT: Panel position syrnbols are as seen from the working posture.		

SYMBOL	MEANING	ILLUSTRATION
O M I	Spot Weld	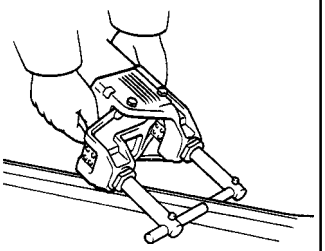
O M I	Mig Plug Weld	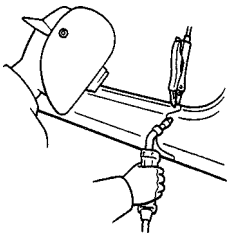
+	Spot MIG Weld	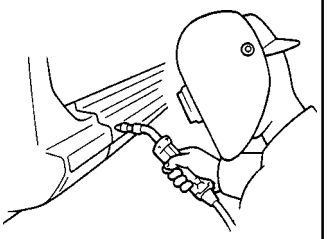

HANDLING PRECAUTIONS ON RELATED COMPONENTS

1. SUPPLEMENTAL RESTRAINT SYSTEM (SRS)

Locations of SRS Components

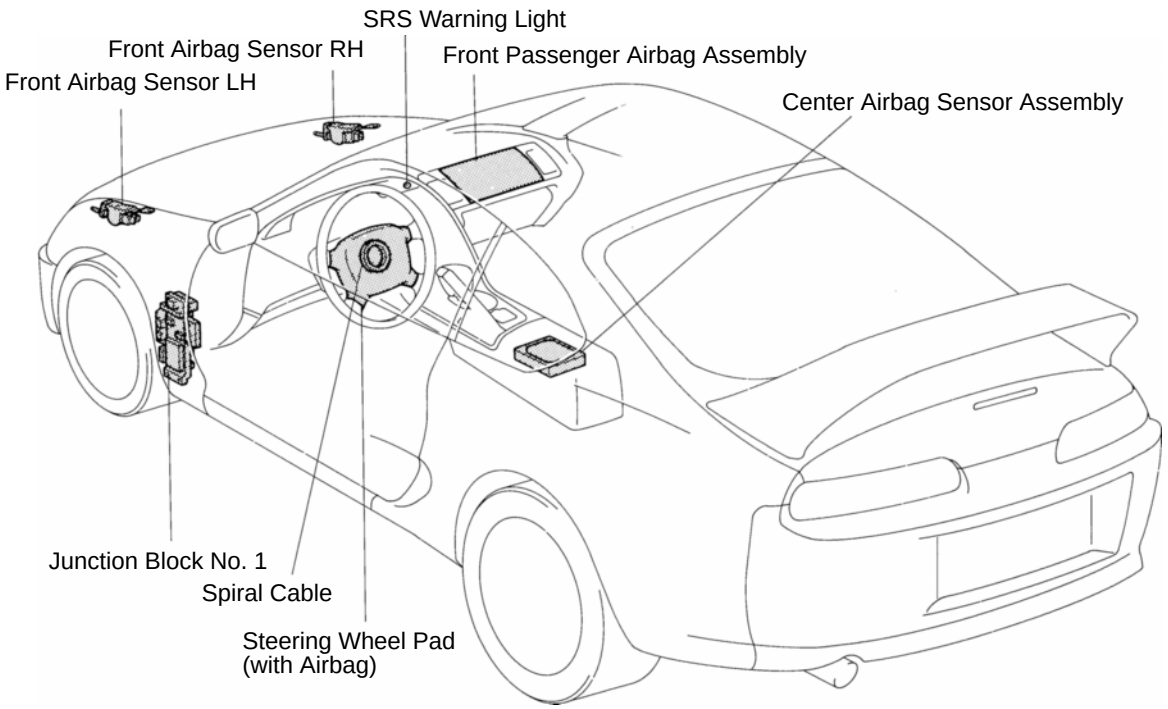

Servicing vehicle with a Supplemental Restraint System (referrerd to as the SRS in the remainder of this manual) installed.
When handling SRS components (removal, installation or inspection, etc.), always follow the directions given in the repair manual for the relevant model year to prevent the occurrence of accidents and airbag malfunction.
Also take the following precautions when repairing the body:

- Work must be started after 90 seconds or longer from the time the ignition switch is set to the LOCK position and the negative (-) terminal cable is disconnected from the battery.
  (The airbag system is equipped with a backup power source so that if work is started within 20 seconds of disconnecting the negative (-) terminal cable of the battery, the airbag may be deployed.)
  When the negative (-) terminal cable is disconnected from the battery, memory of the clock and audio systems will be cancelled. So before starting work, make a record of the contents memorized by each memory system. Then when work is finished, reset the clock and audio systems as before.
  When the vehicle has tilt and telescopic steering, power seat, outside rear view mirror and power shoulder belt anchorage, which are all equipped with memory function, it is not possible to make a record of the memory contents. So when the operation is finished, it will be necessary to explain this fact to the customer, and request the customer to adjust the features and reset the memory.
- When using electric welding, first disconnect the SRS connector (yellow color and 2 pins) under the steering column near the combination switch connector on the glove compartment finish plate and lower the front scuff plate before starting work.

- Before repairing the body, remove the SRS parts if, during repair, shocks are likely to be applied to the sensors due to vibrations of the body or direct tapping with tools or other parts.
- Do not expose the SRS parts directly to hot air or flames.
  NOTICE:
  1) *The maximum ambient temperature tolerance is 120˚C (248˚F) for the front airbag sensor, 105˚C (221˚F) for the center airbag sensor assembly and 93˚C (200˚F) for the steering wheel pad, and front passenger airbag assembly. If it is possible that the ambient temperature may reach or exceed the temperature limit, remove the sensors and the steering wheel pad from the vihicle or protect them with a hot insulation material before starting work.*
  2) *Prior to welding, remove adjacent SRS parts from the vehicle or protect there with fire-proof covers.*
- If the front fender or periphery of the vehicle is damaged, visually inspect for damage to the front airbag sensor using the inspection procedures described in section RS of the repair manual for the relevant model year.
  Also check that the dimensions of the body where the front airbag sensor is installed match those in the body dimension drawings.
  (The airbag may malfunction, or may not work, if the mounting angle or dimensions of the sensor mount are not correct.)

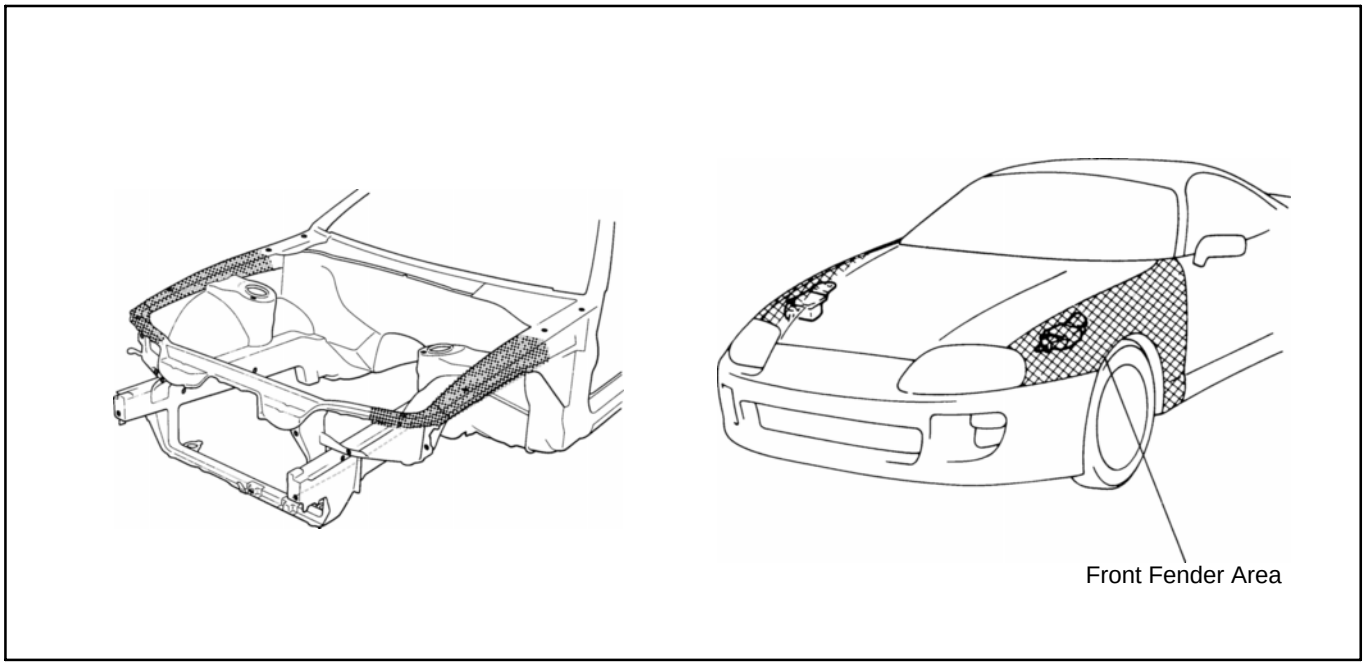

- If the vehicle is damaged, visually inspect for damage to the steering wheel pad using the inspection procedures described in section RS of the repair manual for the relevant model year.
- When removing or handling the steering wheel pad, and front passenger airbag assembly keep the pad upper surface facing upward. Also, lock the lock lever of the twin lock type connector at the rear of the pad and take care not to damage the connector.
  (Storing the pad or front passenger airbag assembly with its metalic surface up may lead to a serious accident if the airbag inflates for some reason.)
- Store the steering wheel pad and the front passenger airbag assembly where the ambient temperature remains below 93˚C (200˚F), without high humidity and away from electrical noise.
- Be careful not to let painting materials contact the SRS parts.
- Information labels are attached to the periphery of the SRS components. Follow the NOTICES.
- Store the airbag assembly where the ambient temperature remains below 93˚C (200˚F), without high humidity and away from electrical noise.

2. BRAKE SYSTEM

The brake system is one of the most important safety components. Always follow the directions and notes given in section BR of the repair manual for the relevant model year when handling brake system parts.
NOTICE: When repairing the brake master cylinder or TRAC system, bleed the air out of the TRAC system.

3. DRIVE TRAIN AND CHASSIS

The drive train and chassis are components-that can have great effects on the running performance and vibration resistance of the vehicle. After installing components in the sections listed in the table below, perform alignments to ensure correct mounting angles and dimensions. Particularly accurate repair of the body must also be done to ensure correct alignment.
HINT: Correct procedures and special tools are required for alignment. Always follow the directions given in the repair manual for the relevant model year during alignment and section DI of this manual.

Component to be aligned	Section of repair manual for relevant model year
Front Wheels	Suspension and Axle (SA) section
Rear Wheels	Suspension and Axle (SA) section
Propeller Shaft	Propeller Shaft (PR) section

4. ECU (ELECTRONIC CONTROL UNIT)

Locations of ECUs

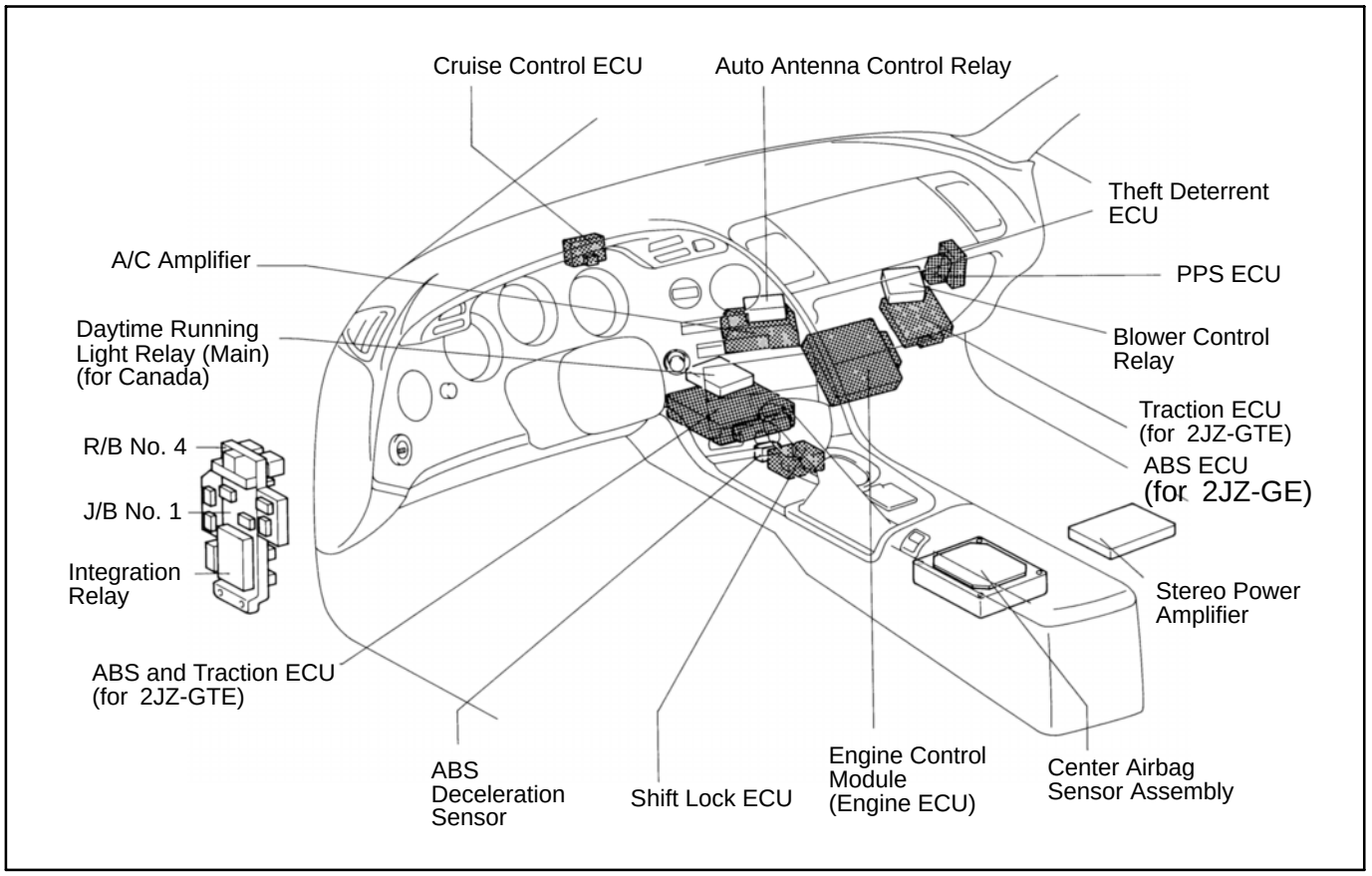

Locations of ECUs (Cont'd)

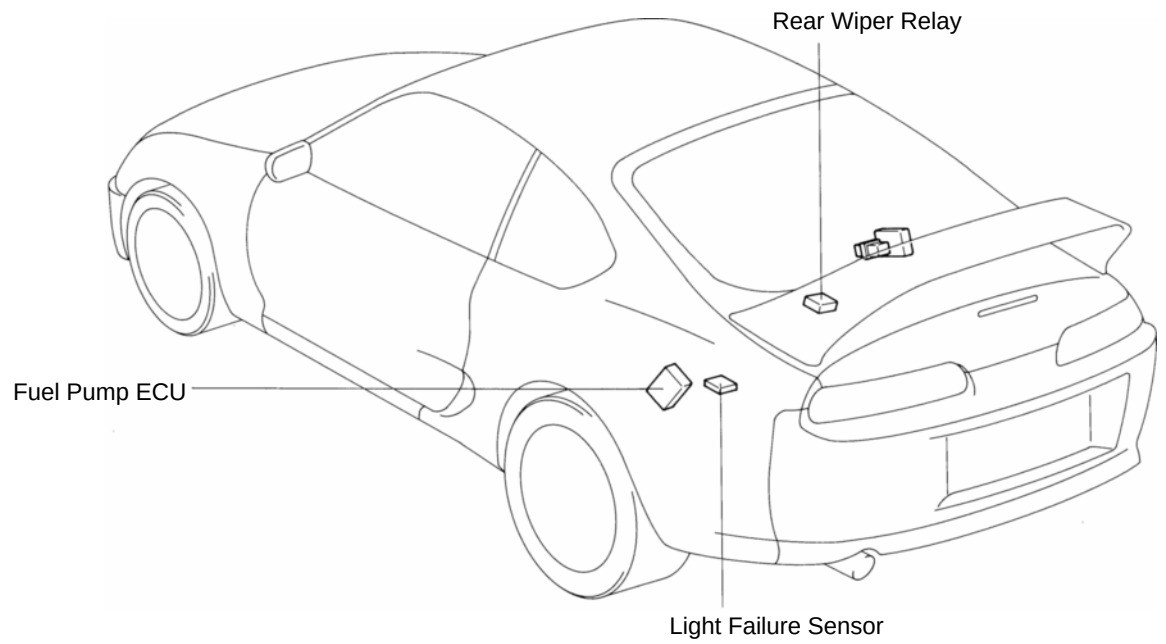

Many ECUs are mounted in this vehicle.
Take the following precautions during body repair to prevent damage to the ECUs.

- Before starting electric welding operations, disconnect the negative (-) terminal cable from the battery. When the negative (-) terminal cable is disconnected from the battery, memory of the clock and audio systems will be cancelled. So before starting work, make a record of the contents memorized by each memory system. Then when work is finished, reset the clock and audio systems as before.
  When the vehicle has tilt and telescopic steering, power seat and outside rear view mirror, which are all equipped with memory function, it is not possible to make a record of the memory contents.
  So when the operation is finished, it will be necessary to explain this fact to the customer, and request the customer to adjust the features and reset the memory.
- Do not expose the ECUs to ambient temperatures above 80˚C (176˚F).
  NOTICE: if it is possible the ambient temperature may reach 80˚C (176˚F) or more, remove the ECUs from the vehicle before starting work.
- Be careful not to drop the ECUs and not to apply physical shocks to them.

5. COMPONENTS ADJACENT TO THE BODY PANELS

Various types of component parts are mounted directly on or adjacently to the body panels.
Strictly observe the following precautions to prevent damaging these components and the body panels during handling.

- Before repairing the body panels, remove their components or apply protective covers over the components.
- Before prying components off using screwdriver or a scraper, etc., attach protective tape to the tool tip or blade to prevent damaging the components an the body paint.
- Before removing components from the outer surface of the body, attach protective tape to the body to ensure no damage to painted areas.
  HINT: Apply touch-up paint to any damaged paint surfaces.
- Before drilling or cutting sections, make sure that there are no wires, etc. on the reverse side.

GENERAL REPAIR INSTRUCTIONS

Work Precautions

SAFETY
Never stand in direct line with the chain when using a puller on the body or frame, and be sure to attach a safety cable.

VEHICLE PROTECTION
When welding, protect the painted surfaces, windows, seats an carpet with heat-resistant, fire-proof covers.

SAFETY

1. Before performing repair work, check for fuel leaks. If a leak is found, be sure to close the opening totally.
2. If it is necessary to use a frame in the area of the-fuel tank, first remove the tank and plug the fuel line.



WRONG

WRONG

SAFETY WORK CLOTHES
In addition to the usual mechanic's wear, cap and safety shoes, the appropriate gloves, head protector, glasses, ear plugs, face protector, dust-prevention mask, etc. should be worn as the situation demands.

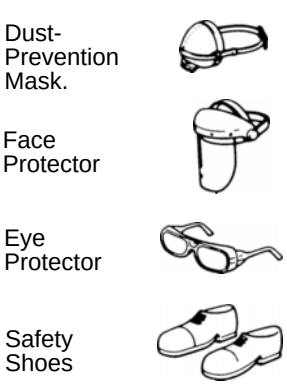

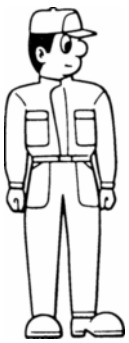

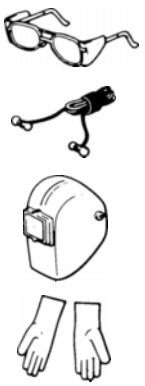

HAND TOOLS
keeping your hand tools in neat order improve your work efficiency.

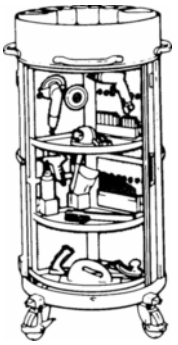

Body Mechanic Stand

Proper and Efficient Work Procedures

REMOVAL

PRE-REMOVAL MEASURING
Before removal or cutting operations, take measurements in accordance with the dimension diagram. Always use a puller to straighten a damaged body or frame.

NUMBER OF SPOT WELDS AND PANEL POSITIONS
The number of spot welds and the panel positions to be removed are shown for your reference.
HINT: See "Symbols" on page IN-4 , 5.

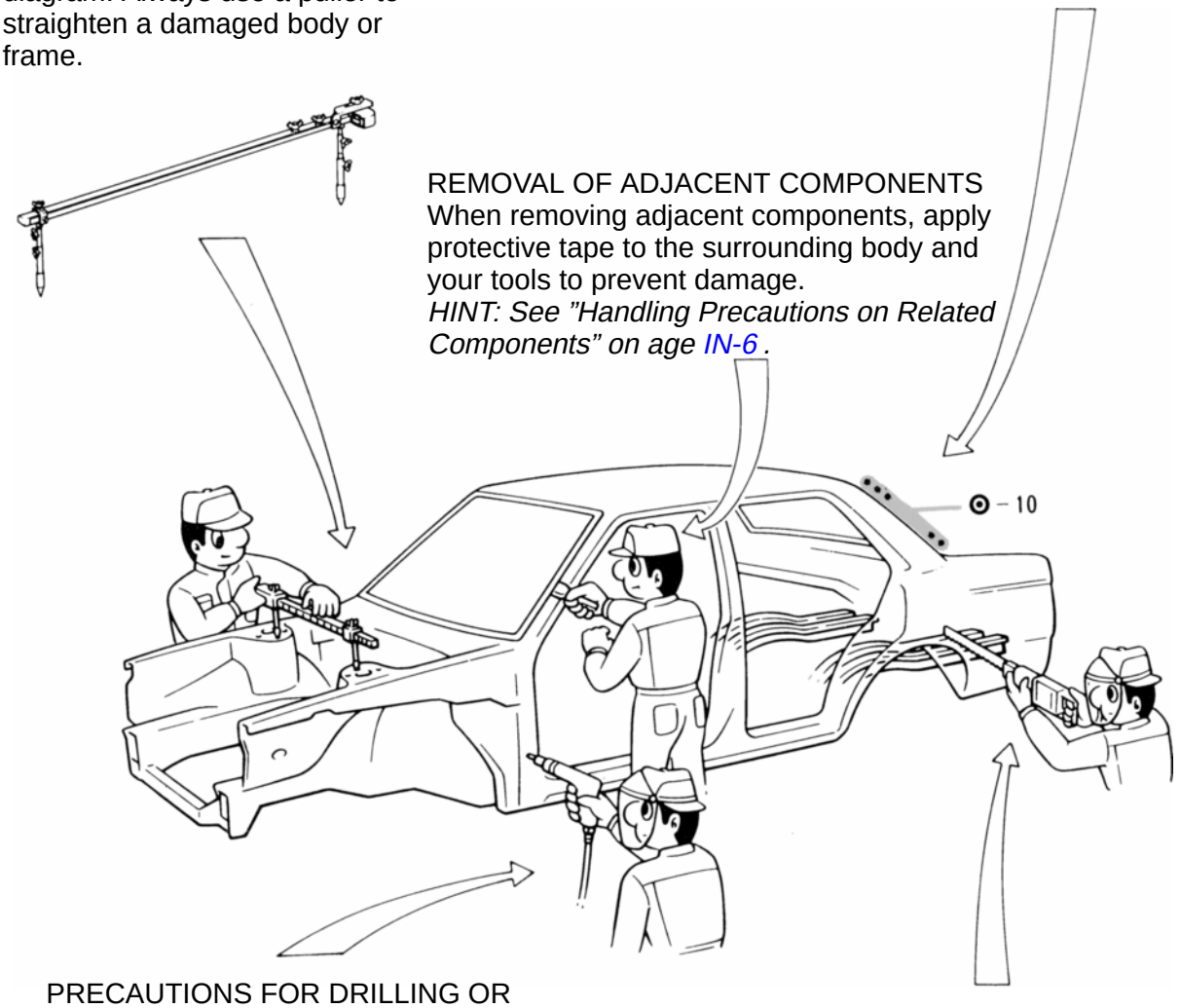

REMOVAL OF ADJACENT COMPONENTS
When removing adjacent components, apply protective tape to the surrounding body and your tools to prevent damage.
HINT: See "Handling Precautions on Related Components" on age IN-6 .

PRECAUTIONS FOR DRILLING OR CUTTING
Check behind any area to be drilled or cut to insure that there are no hoses, wires, etc., that may be damaged.
HINT: See "Handling Precautions on Related Components" on page IN-6 .

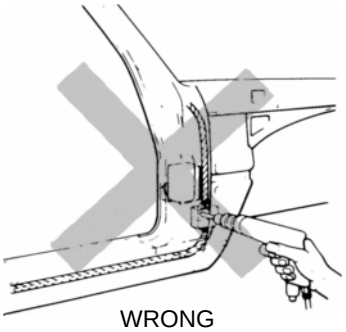
WRONG

CUTTING AREA
Always cut in a straight line and avoid reinforced area.

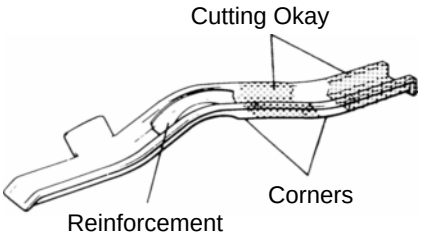

PREPARATION FOR INSTALLATION

SPOT WELD POINTS

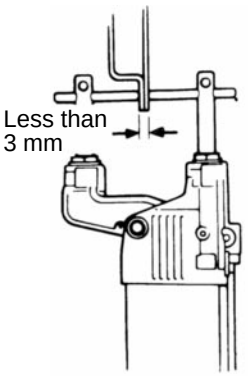

When welding panels with a combined thickness of over 3 mm (0.12 in.), use a MIG (Metal Inert Gas) welder for plug welding.
HINT: spot welding will not provide sufficient durability for panels over 3 mm (0.12 in.) thick.

APPLICATION OF WELD-THROUGH PRIMER (SPOT SEALER)

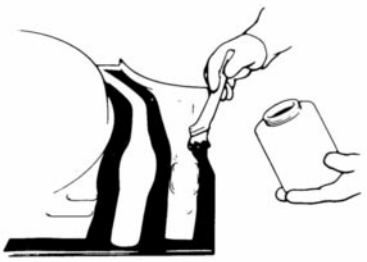

Remove the paint from the portion of the new parts and body to be welded, and apply weld-through primer.
HINT: See "ANTI-RUST TREATMENT" on page AR-2 .



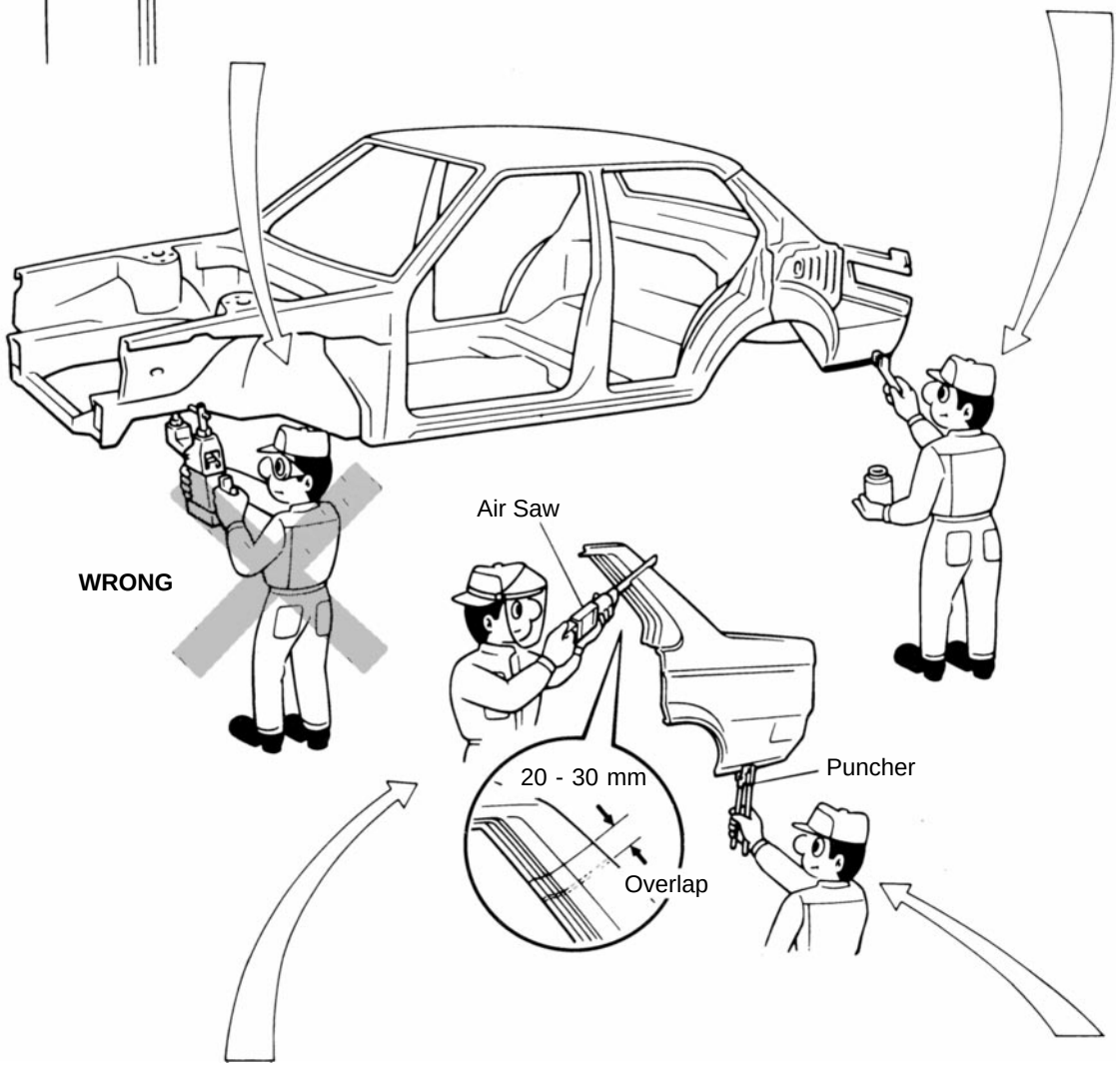

ROUGH CUTTING OF JOINTS
For joint areas, rough cut the new parts, leaving 20 - 30 mm (0.79 - 1.18 in.) overlap.

MAKING HOLES FOR PLUG WELDING
For areas where a spot welder cannot be used, use a puncher or drill to make holes for plug welding.

REFERENCE: mm (in.)

Thickness of welded portion	Size of plug hole
1.0 (0.04) under	5 (0.20) ϕ over
1.0 (0.04) - 1.5 (0.06)	6.5 (0.26) ϕ over
1.5 (0.06) over	8 (0.31) ϕ over

INSTALLATION

PRE-WELDING MEASUREMENTS
Always take measurements before installing underbody or engine components to insure correct assembly. After installation, confirm proper fit.

WELDING PRECAUTIONS

1. The number of welding spots should be as follows.
   Spot weld: 1.3 x No. of manufacturer's spots.
   Plug weld: More than No. of manufacturer's plugs.

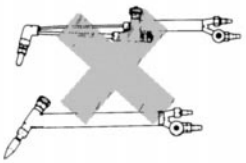

WRONG

2. Plug welding should be done with a MIG (Metal Inert Gas) welder. Do not gas weld or braze panels at areas other than specified.

POST-WELDLNG REFINISHING

1. Always check the welded spots to insure they are secure.
2. When smoothing out the weld spots with a disc grinder, be careful not to grind off too much as this would weaken the weld.

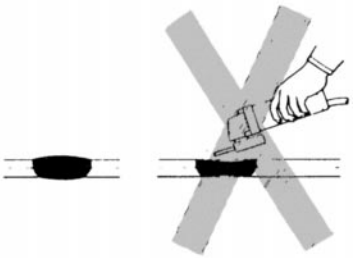

OKAY **WRONG**

SPOT WELD LOCATIONS
Try to avoid welding over previous spots.

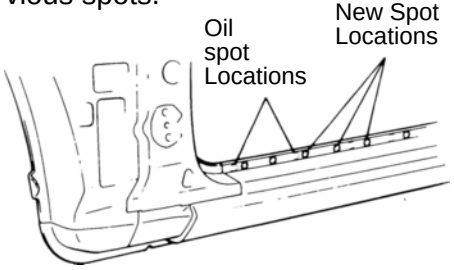

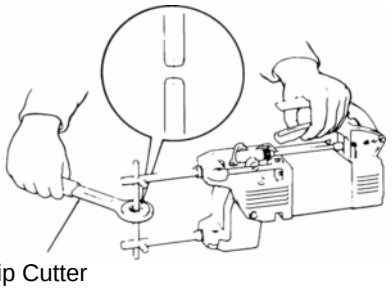

Tip Cutter

SPOT WELDING PRECAUTIONS

1. The shape of the welding tip point has an effect on the strength of the weld.
2. Always insure that the seams and welding tip are free of paint.

ANTI-RUST TREATMENT

When replacing body panels, always apply body sealer, anti-rust agent or undercoat according to the requirements of your country.
HINT: For further details, see the description given in section AR of this manual.

BODY SEALER
Apply body sealer to the required areas.



Cartridge Type



Tube Type

ANTI-RUST AGENT (WAX)
Apply anti-rust agent to following sections.

- Inside of the hems of the doors and hood.
- Around the hinges of the doors and hood.
- Inside of the welded parts with boxed cross-section.

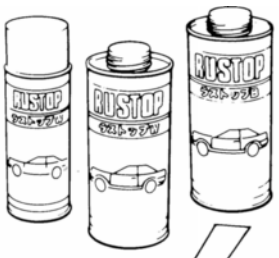

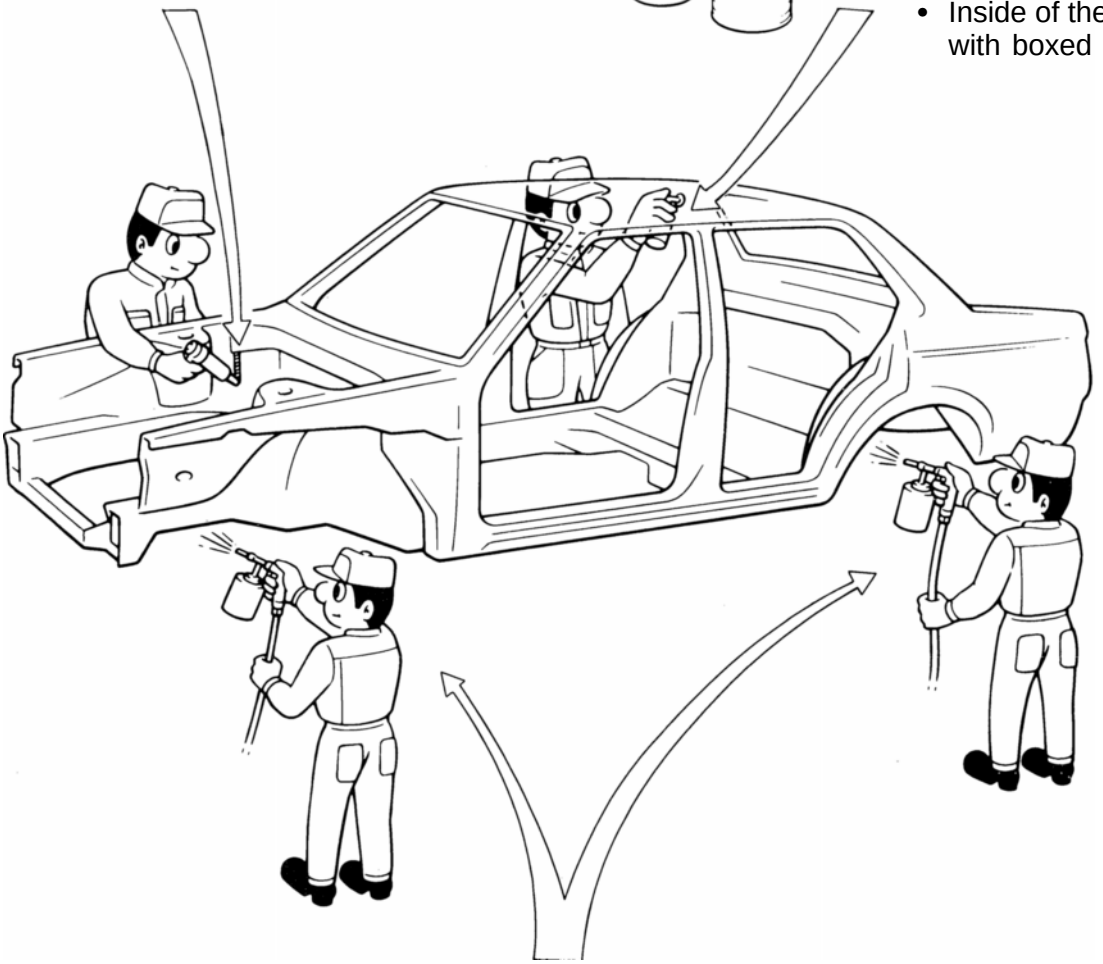



Undercoating (Oil base)



Undercoating (Water base)

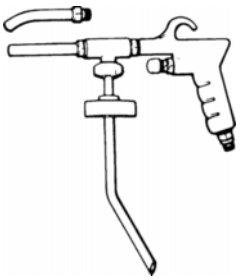

spray Gun

UNDERCOAT
Apply undercoat to the underbody and wheel housings.

VEHICLE LIFT AND SUPPORT LOCATIONS

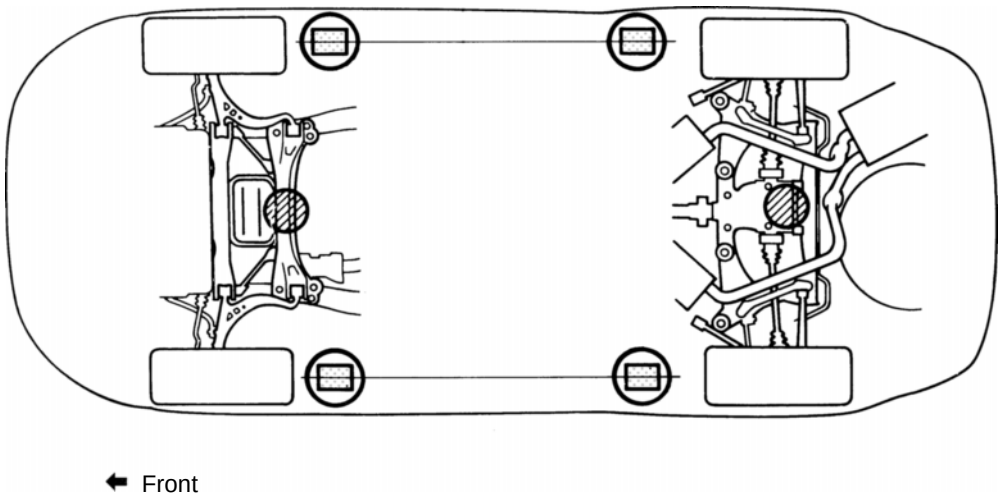

⬅ Front

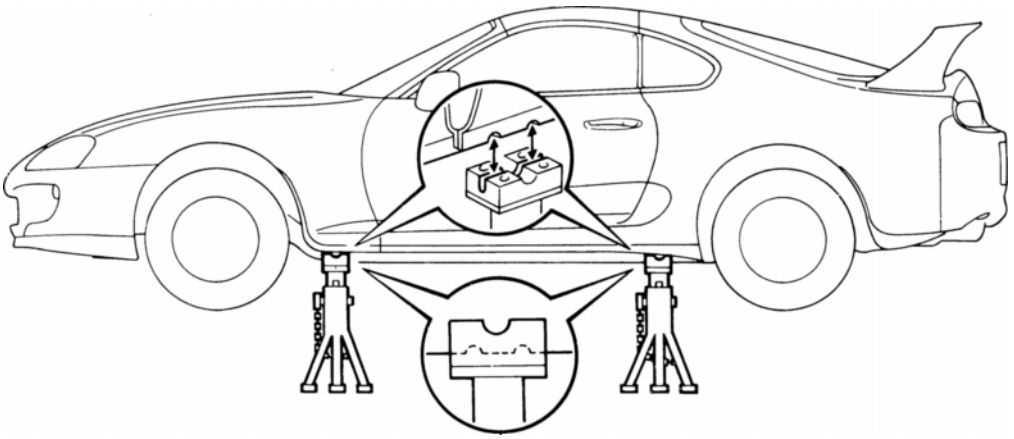

JACK POSITION

Front . . . . . Front crossmember
Rear . . . . . Rear axle beam
CAUTION: Before jacking-up the rear and front, make sure the car is not carrying any extra weight.

PANTOGRAPH JACK POSITION

SUPPORT POSITION

Safety stand and swing arm type lift . . . . . .

ABBREVIATIONS USED IN THIS MANUAL

For convenience, the following abbreviations are used in this manual.

ABS	Antilock Brake System
A/C	Air Conditioner
assy	assembly
ECT	Electronic Controlled Transmission
ECU	Electronic Control Unit
e.g.	Exempli Gratia (for Example)
Ex.	Except
FWD	Front Wheel Drive Vehicles
4WD	Four Wheel Drive Vehicles
in.	inch
LH	Left-hand
LHD	Left-hand Drive
MIG	Metal Inert Gas
M/Y	Model Year
PPS	Progressive Power Steering
RH	Right-hand
RHD	Right-hand Drive
SRS	Supplemental Restraint System
w/	with
w/o	without

COLLISION REPAIR INFORMATION

FOR THE TOYOTA DEALER

TITLE: ANTI–CORROSION TREATMENT

SECTION: GENERAL INFORMATION BULLETIN #82

MODELS: ALL

DATE: DECEMBER 1997

TOYOTA SUPPORTS TECHNICIAN PROFESSIONALISM THROUGH ASE CERTIFICATION

To prevent corrosion and reduce interior noise when replacing body panels, always apply corrosion inhibiting and sound dampening materials such as body sealer, cavity wax, undercoating and body foam according to Toyota recommendations.

These recommendations can be found in the Anti–Rust Treatment (AR) section of the model specific Repair Manual for Collision Damage publication. Collision repair manuals can be obtained through a Toyota dealership parts department.

BODY SEALER

For waterproofing and corrosion protection measures, always apply body sealer to the seams and hems of the doors, hoods, etc.

Apply body sealer to required areas:

Door seams (Illustration A.)

Underhood seams (Illustration B.)

Wherever body sealer has been removed during a repair

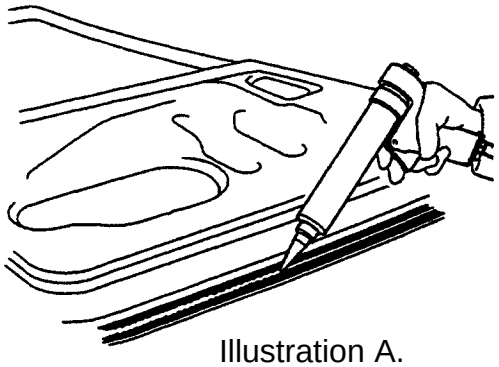

Illustration A.

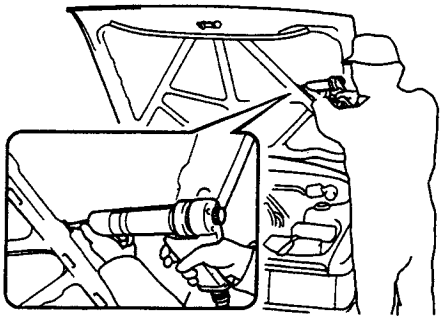

Illustration B.

CAVITY WAX

To provide corrosion resistance, always apply cavity wax to the inside of the hemming areas of the doors and hoods, around the hinges, and to the welded surfaces inside the boxed cross–section structure of the side member, body pillar, etc.

Apply cavity wax to required areas:

Inside of the hems of the doors and hoods (Illustration A.)

Around the hinges of the doors and hood (Illustration B.)

Wherever the original cavity wax was disturbed during a repair

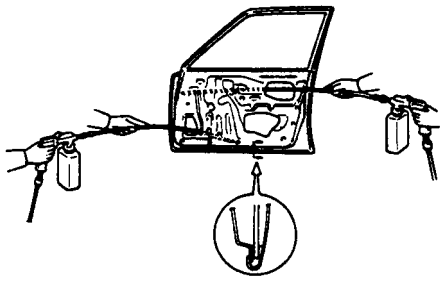

Illustration A.

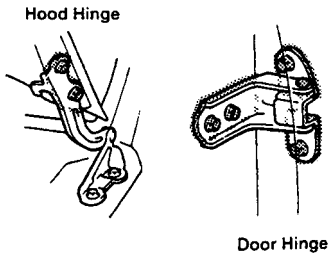

Illustration B.

UNDERCOATING

To protect the body from damage by flying stones, always apply chip resistant materials to the bottom surfaces of the underbody and inside of the wheel housing.

Apply chip resistant materials to all welded areas and panel joints (Illustration A.); then apply to the entire area (Illustration B.).

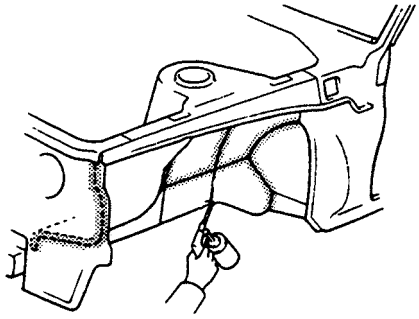

Illustration A.

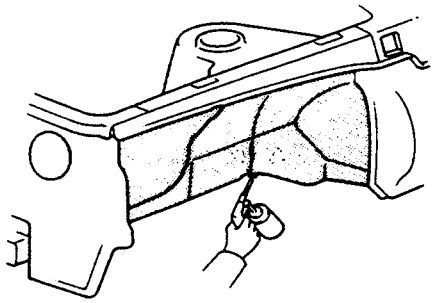

Illustration B.

BODY FOAM

Apply body foam to all areas where foam was damaged or removed during a repair. This will restore sound deadening characteristics and corrosion protection.

Apply body foam to all required areas:

"A", "B" and "C" pillar

Rocker panels

Wherever foam was disturbed or removed during a repair

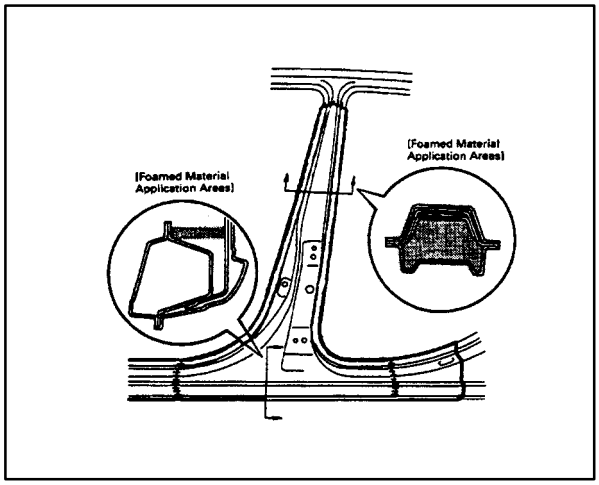

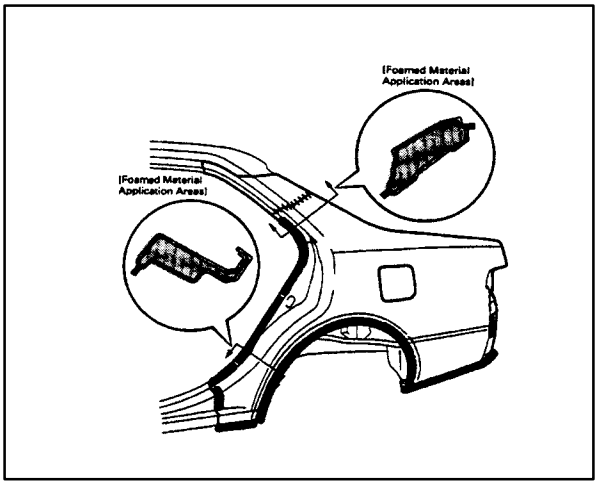

The information on the application of all anti–corrosion materials is contained in the Anti–Corrosion Treatment section (AR), and throughout the Body Panel Replacement section of the Toyota Repair Manual for Collision Damage Publications. Information on anti–corrosion material application can also be found in the Fundamental Body Repair Procedures manual and the Noise, Vibration, and Harshness manual.

These publications may be obtained through your local Toyota dealership parts department or by obtaining the part number and calling:

1–800–622–2033 Mon–Fri 7:00 a.m. to 4:30 p.m. Pacific Standard Time

This information can also be obtained by attending Toyota Collision Repair and Refinish training courses:

- Non–Structural Body Repair Techniques
- Structural Body Repair Techniques

MANUFACTURERS LIST

Provided is a list of manufacturers. Call them directly to obtain a list of their products or a product demonstration brochure.

	Phone	Web site
3M:	1–800–877–9344	N/A
Kent:	1–800–654–6333	http://www.farnell.co.uk
Dominion:	1–800–265–0790	http://www.dominionsureseal.com
SEM:	1–800–831–1122	N/A
Crest:	1–800–822–1400	http://www.crestauto.com
Wurth:		
Western area	1–800–346–4198	http://www.wurthwest.com
Illinois	1–800–99–WURTH	http://www.wurthillinois.com
Florida	1–800–829–8316	http://www.wurthflorida.com
All other states	1–800–526–5228	http://www.wurthusa.com

BODY DIMENSION DRAWINGS

ENGINE COMPARTMENT

(Three-Dimensional Distance)

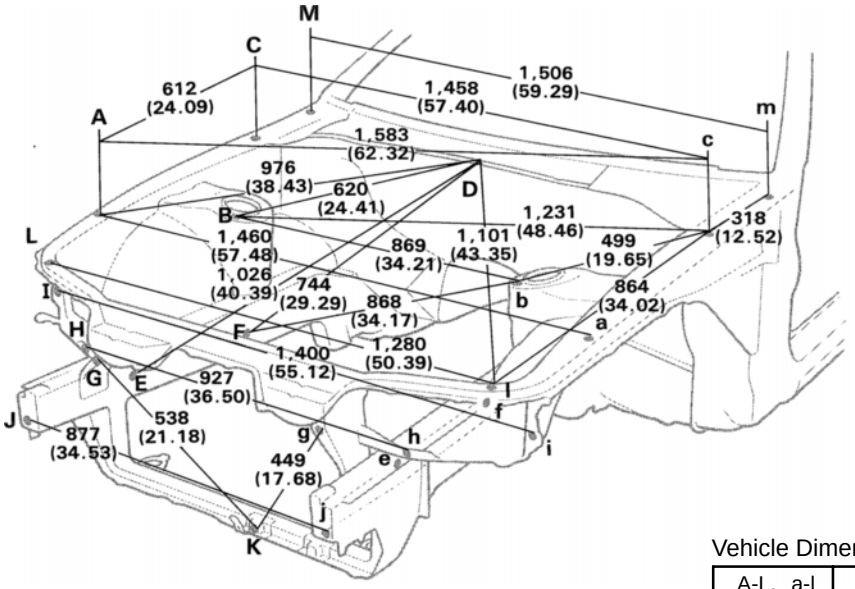

Vehicle Dimensions

A-L, a-l	C-l, c-L	G-g
263 (10.35)	1,617 (63.66)	652 (25.67)

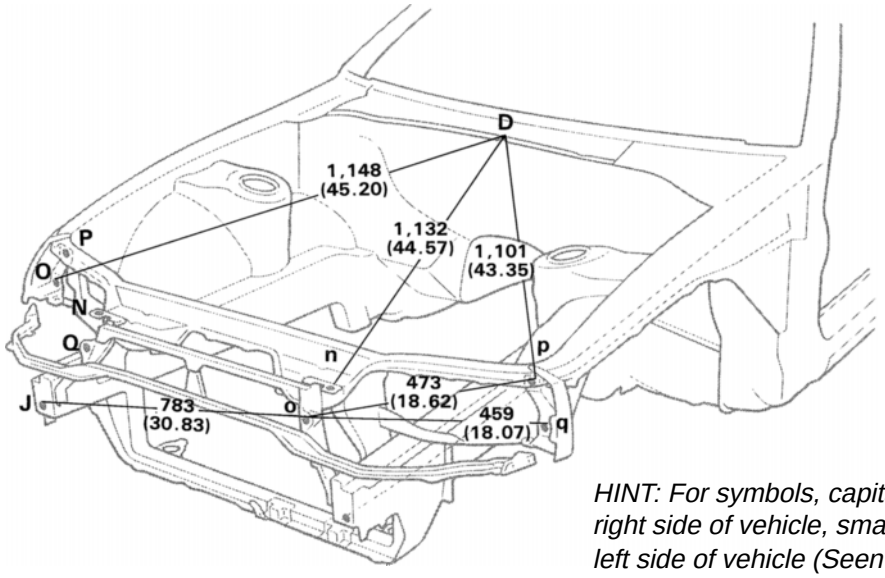

HINT: For symbols, capital letters indicate right side of vehicle, small letters indicate left side of vehicle (Seen from rear).

NO8903
NO8971

mm (in.)

Symbol	Name	Hole dia.	Symbol	Name	Hole dia.
A, a	Front fender apron standard hole	10 (0.39)	J, j	Front side member reinforcement standard hole	8 (0.31)
B, b	Front spring support hole-front	11 (0.43)	K	Cooling fan installation nut	6 (0.24) nut
C, c	Cowl top side panel standard hole	10 (0.39)	L, l	Front fender installation nut	6 (0.24) nut
D	Cowl top panel center mark	—	M, m	Hood hinge installation nut	8 (0.31) nut
E, e	Front side member working hole	18 (0.71)	N, n	Headlight installation nut	6 (0.24) nut
F, f	Front side member standard hole	13 (0.51)	O, o	Headlight installation hole	14x10.6 (0.55x0.42)
G, g	Radiator duct installation hole	7.2 (0.283)	P, p	Headlight installation hole	14x9 (0.55x0.35)
H, h	Radiator support apron brace standard hole	10 (0.39)	Q, q	Headlight installation hole	14x9 (0.55x0.35)
I, i	Apron fender side extension standard hole	9 (0.35)	—	—	—

BODY LOWER BACK PANEL (ASSY)

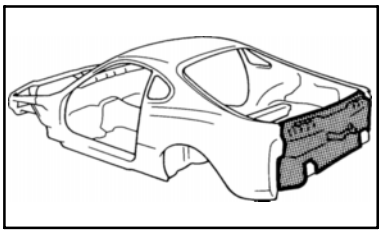

REMOVAL

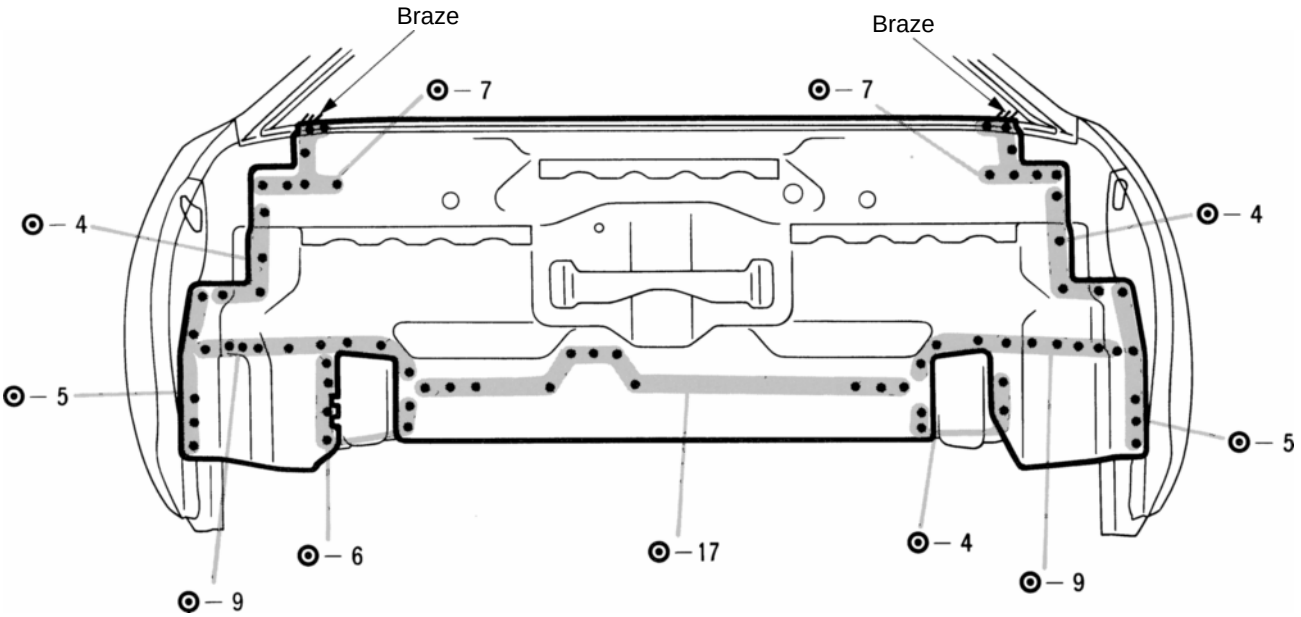

INSTALLATION

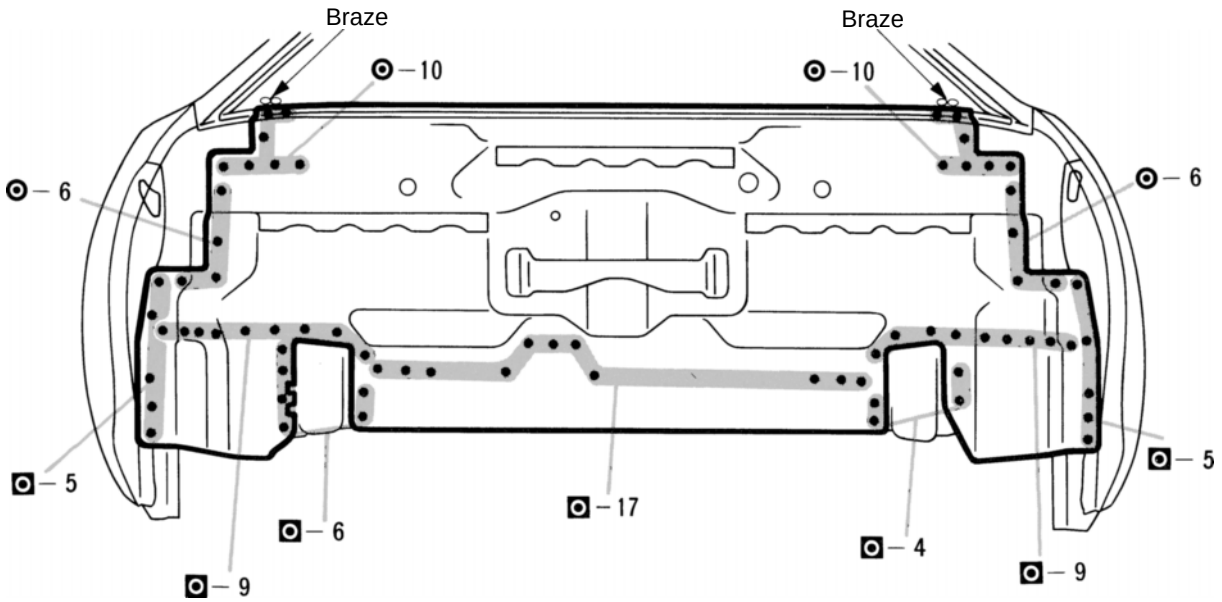

1. Temporarily installing the new parts, check the fit of the back door and rear combination lamp.

BODY OPENING AREAS (Side View: Sport Roof)

(Three-Dimensional Distance)

NO8905

HINT: For symbols, capital letters indicate right side of vehicle, small letters indicate left side of vehicle (Seen from rear).

Vehicle Dimensions Left↔ Right

E-e	F-f	G-g	H-h	I-i
1,148 (45.20)	1,488 (58.58)	1,506 (59.29)	1,510 (59.45)	1,510 (59.45)

J-j	K-k	L-1	M-m
1,095 (43.11)	1,081 (42.56)	1,260 (49.61)	1,530 (60.24)

E-g or e-G	E-h or e-H	E-i or e-I	E-l or e-L	G-l or g-L
1,545 (60.83)	1,548 (60.94)	1,538 (60.56)	1,333 (52.48)	1,846 (72.68)

J-k or j-K
568 (22.36)

G-m or g-M	H-i or h-I	I-l or i-L	J-k or j-K	L-m or l-M
1,871 (73.66)	1,602 (63.07)	1,566 (61.65)	1,227 (48.31)	1,.465 (57.68)

mm(in.)

Symbol	Name	Hole dia.	Symbol	Name	Hole dia.
A, a	Roof panel/ Front body pillar adjoining portion	—	H, h	Rocker panel reinforcement adjoining portion mark	—
B, b	Cowl top panel/ Front body pillar adjoining portion	—	I, i	Rocker panel reinforcement adjoining portion mark	—
C, c	Front door hinge installation nut	10 (0.39)nut	J, j	Weatherstrip installation hole	7.3 (0.29)
D, d	Front door hinge installation nut	10 (0.39)nut	K, k	Weatherstrip installation hole	7.3 (0.29)
E, e	Front body pillar adjoining portion mark	—	L, l	Quater panel adjoining portion mark	—
F, f	Front body pillar adjoining portion mark	—	M, m	Quater panel adjoining portion mark	—
G, g	Front body pillar adjoining portion mark	—	—	—	—

BODY OPENING AREAS (Rear View: Normal Roof)

(Three-Dimensional Distance)

NOB906

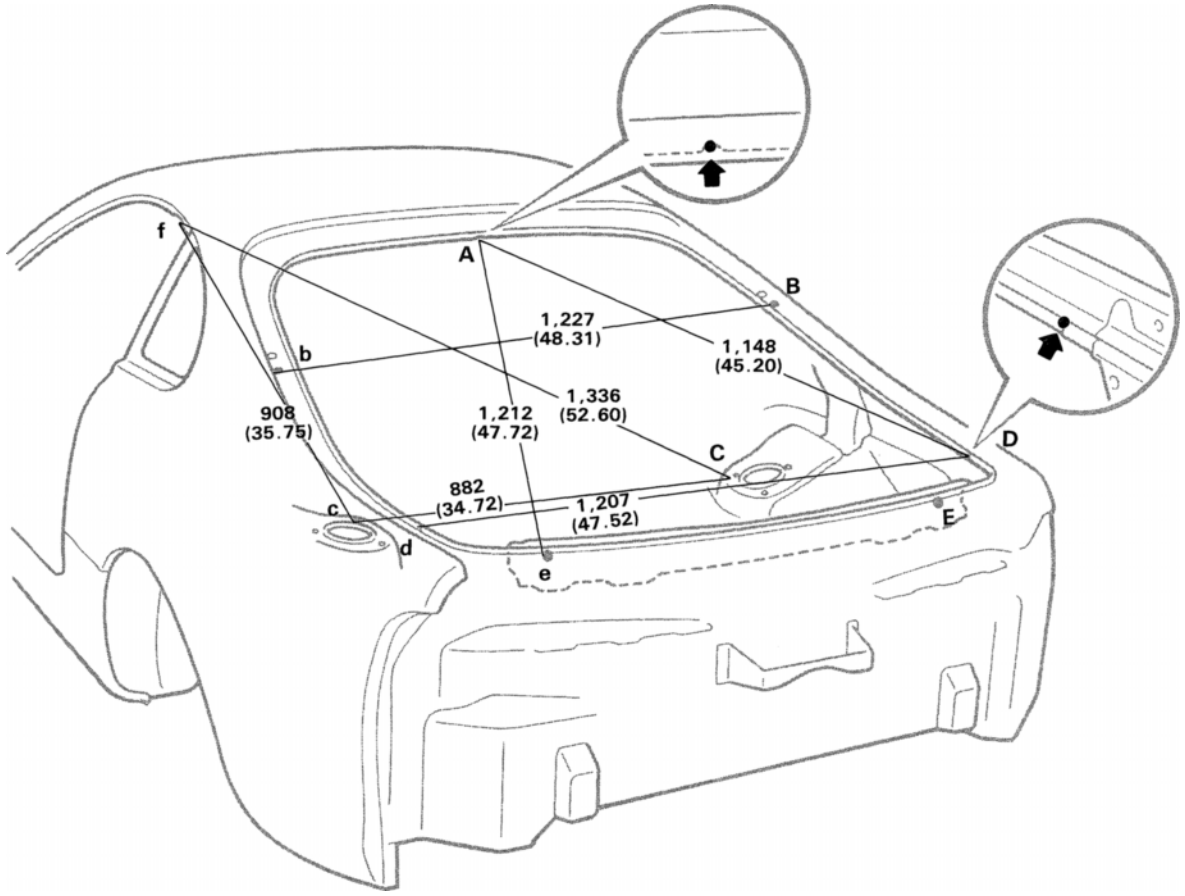

HINT: For symbols, capital letters indicate right side of vehicle, small letters indicate left side of vehicle (Seen from rear).

mm (in.)

Symbol	Name	Hole dia.	Symbol	Name	Hole dia.
A	Back door opening frame center mark	—	D, d	Back door opening trough / Quater panel adjoining portion	—
B, b	Damper stay installation hole-rear	8 (0.31)	E, e	Lower back panel reinforcement standard hole	10 (0.39)
C, c	Rear spring support hole-inner, front	9 (0.35)	F, f	Roof side rail adjoining portion mark	—

BODY OPENING AREAS (Rear View: Sport Roof)

(Three-Dimensional Distance)

HINT: For symbols, capital letters indicate right side of vehicle, small letters indicate left side of vehicle (Seen from rear).

mm (in.)

Symbol	Name	Hole dia.	Symbol	Name	Hole dia.
A	Back door opening frame center mark	—	D, d	Back door opening trough / Quarter panel adjoining portion	—
B, b	Damper stay installation hole-rear	8 (0.31)	E, e	Lower back panel reinforcement standard hole	10 (0.39)
C, c	Rear spring support hole-inner, front	9 (0.35)	F, f	Front body pillar adjoining portion mark	—

BODY OPENING AREAS (Side View: Normal Roof)

(Three-Dimensional Distance)

NO8904

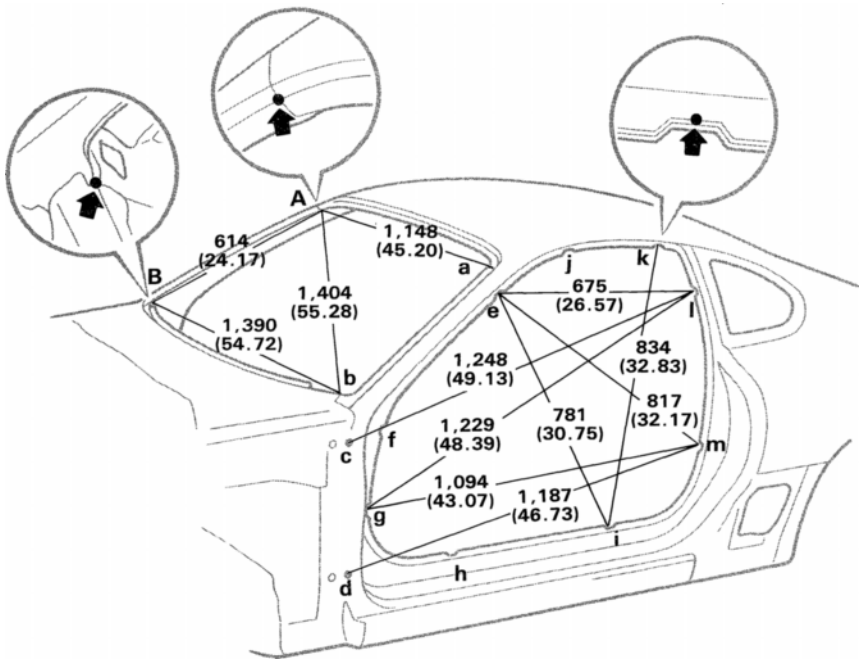

HINT: For symbols, capital letters indicate right side of vehicle, small letters indicate left side of vehicle (Seen from rear).

Vehicle Dimensions Left↔ Right

E-e	F-f	G-g	H-h	I-i
1,234 (48.58)	1,488 (58.58)	1,506 (59.29)	1,510 (59.45)	1,510 (59.45)

J-j	K-k	L-l	M-m
1,094 (43.07)	1,090 (42.91)	1,260 (49.61)	1,530 (60.24)

E-g or e-G	E-h or e-H	E-i or e-I	E-l or e-L	G-l or g-L
1,531 (60.28)	1,546 (60.87)	1,573 (61.93)	1,418 (55.83)	1,846 (72.68)

G-m or g-M	H-i or h-I	I-k or i-K	I-l or i-L	L-m or l-M
1,871 (73.66)	1,602 (63.07)	1,530 (60.24)	1,566 (61.65)	1,465 (57.68)

mm (in.)

Symbol	Name	Hole dia.	Symbol	Name	Hole dia.
A, a	Roof panel/ Front body pillar adjoining portion	—	H, h	Rocker panel reinforcement adjoining portion mark	—
B, b	Cowl top panel/ Front body pillar adjoining portion	—	I, i	Rocker panel reinforcement adjoining portion mark	—
C, c	Front door hinge installation nut	10 (0.39)nut	J, j	Roof side rail adjoining portion mark	—
D, d	Front door hinge installation nut	10 (0.39)nut	K, k	Roof side rail adjoining portion mark	—
E, e	Front body pillar adjoining portion mark	—	L, l	Quarter panel adjoining portion mark	—
F, f	Front body pillar adjoining portion mark	—	M, m	Quarter panel adjoining portion mark	—
G, g	Front body pillar adjoining portion mark	—	—	—	—

BODY PANEL UNDERCOATING AREAS

HINT:

1. *First wipe off any dirt, grease or oil with a rag soaked in a grease, wax and silicone remover.*
2. *Cover the surrounding areas with masking paper to avoid coating unnecessary areas. If other areas are accidently coated, wipe off the coating immediately.*
3. *Apply the first coating of undercoat to all welded areas and panel joints, then apply a second coat over the entire area.*
4. *Do not coat parts which become hot, such as the tailpipe, or moving parts, such as the propeller shaft.*
5. *Besides the locations described below, apply undercoating to all weld points under the body to insure corrosion prevention.*
6. *Be sure to seal the edge of the flange of the member and bracket with undercoating.*
7. *If undercoat is damaged by peeling, cracks etc., be sure to repair as necessary.*

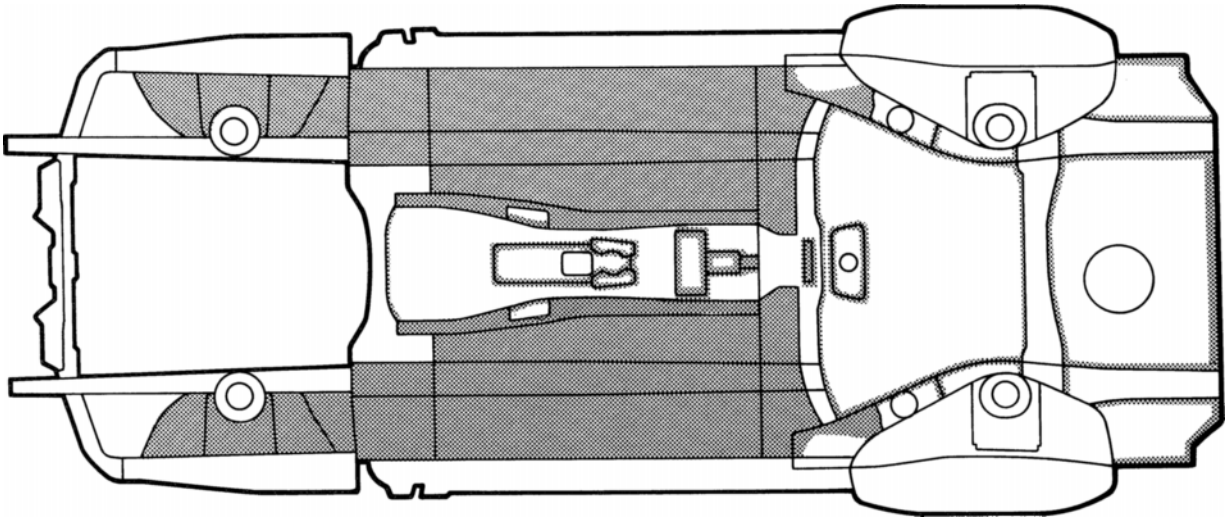

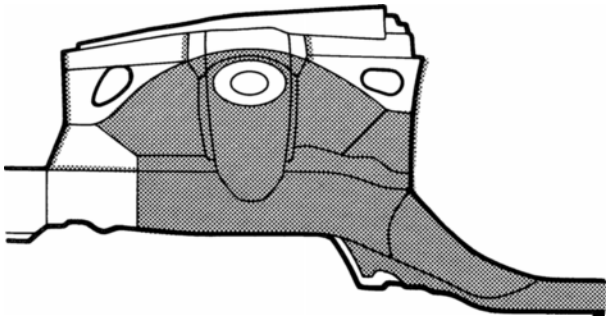

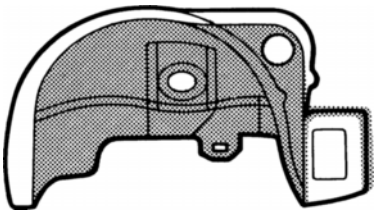

REFERENCE: Referring to the notes above, undercoating should be applied according to the specifications for your country.

BODY PANEL ANTI-RUST AGENT (WAX) APPLICATION AREAS

HINT:

1. *Whenever adjusting the doors and hoods, apply anti-rust agent (wax) around the hinges.*
2. *Even if partially repairing a part, apply anti-rust agent (wax) over the entire application area of the part.*
3. *Wipe off the anti-rust agent immediately with a rag soaked in a grease, wax and silicone remover, if accidently applied to other areas.*

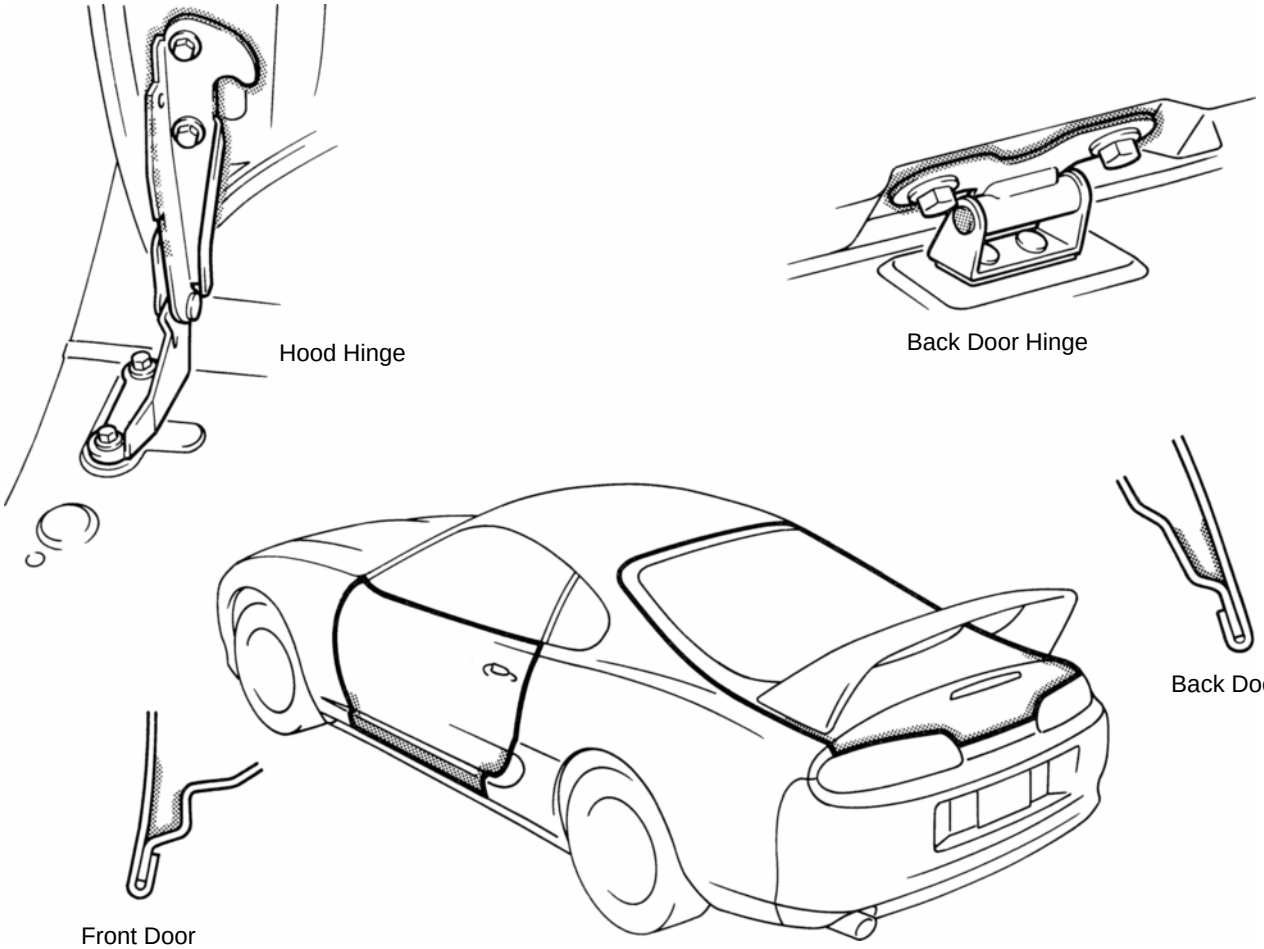

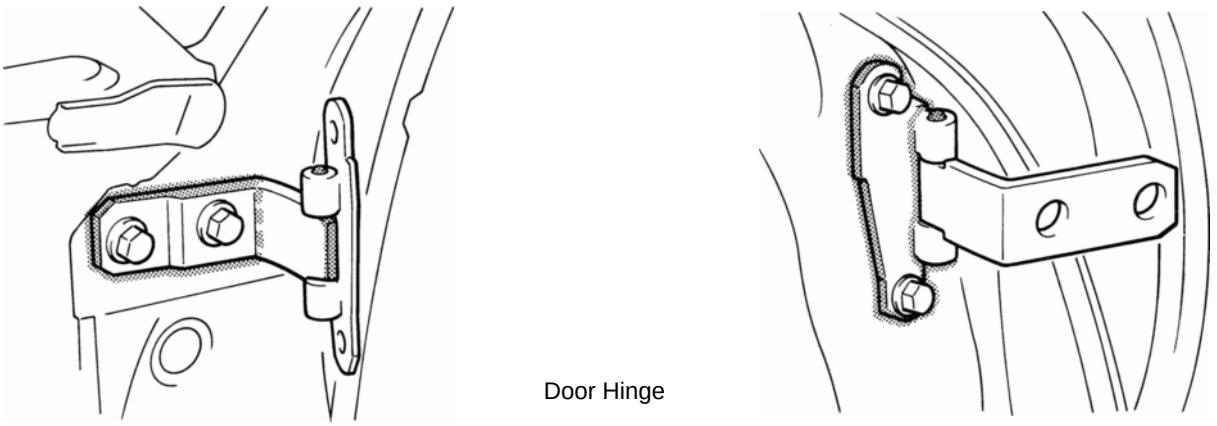

BODY PANEL ANTI-CHIPPING PAINT APPLICATION AREAS

HINT:

1. *Anti-chipping paint should be applied to some areas before the second coat and to others after the top coat.*
2. *If other areas are accidentally coated, wipe of the paint immediately with a rag soaked in a grease, wax and silicone remover.*

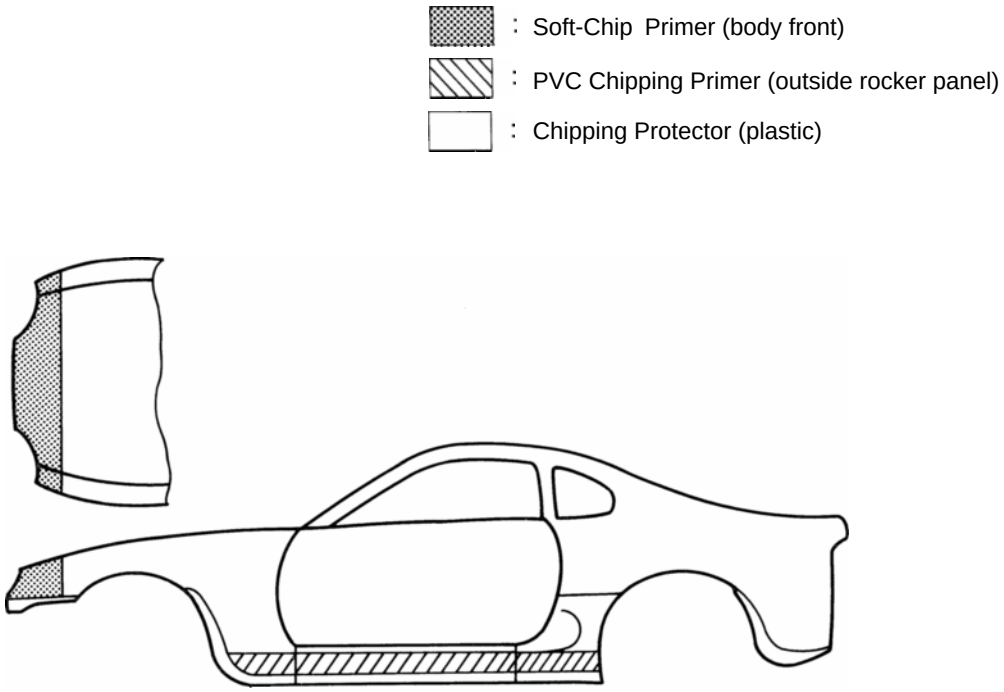

BODY PANEL SEALING AREAS

HINT:

1. *Prior to applying body sealer, clean the area with a rag soaked in a grease, wax and silicone remover.*
2. *If weld through primer was used, first wipe off any excess and coat with anti-corrosion primer before applying body sealer.*
3. *Wipe off excess body sealer with a rag soaked in a grease, wax and silicone remover.*
4. *If body sealer is damaged by peeling, cracks, etc., be sure to repair as necessary.*

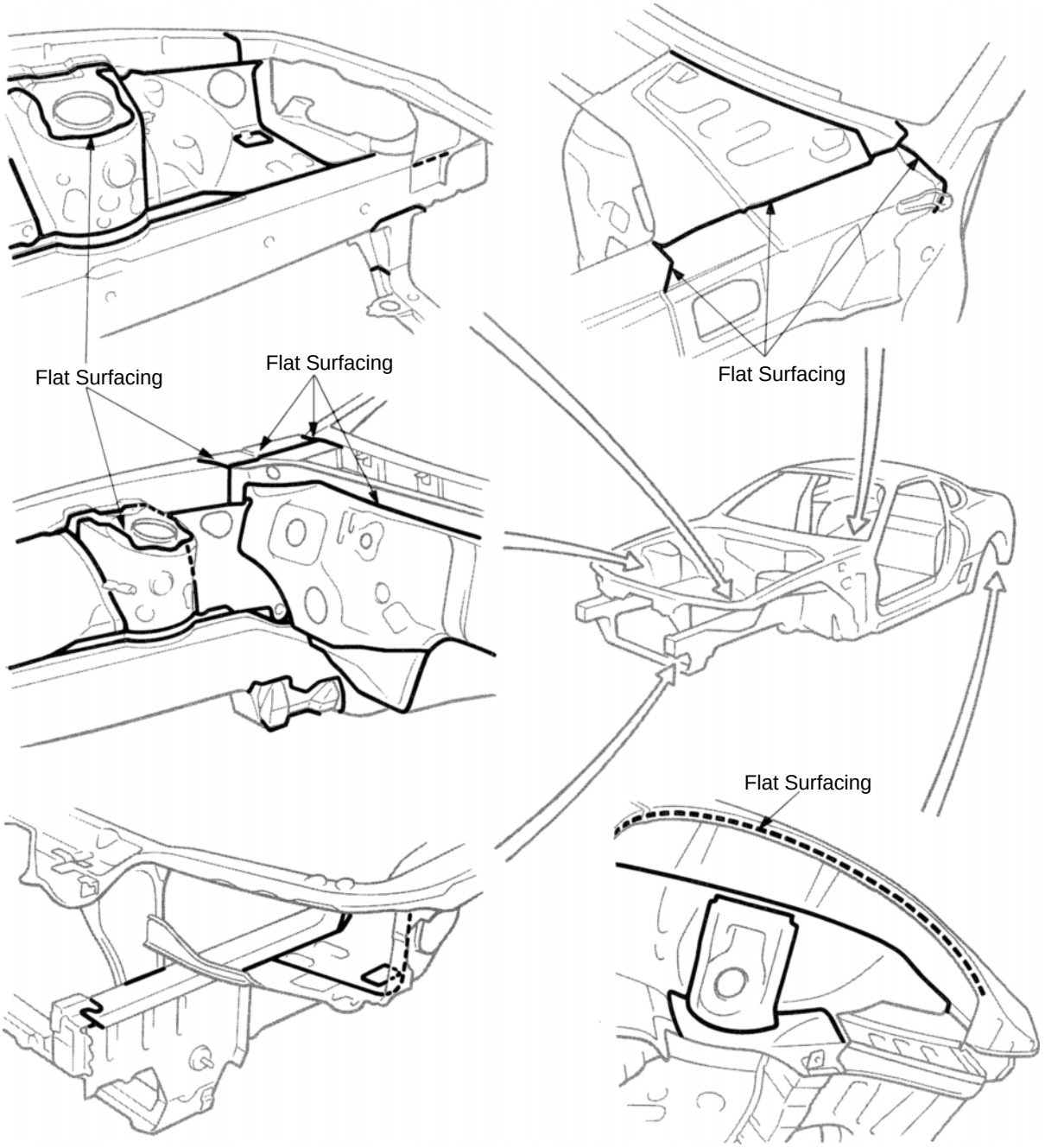

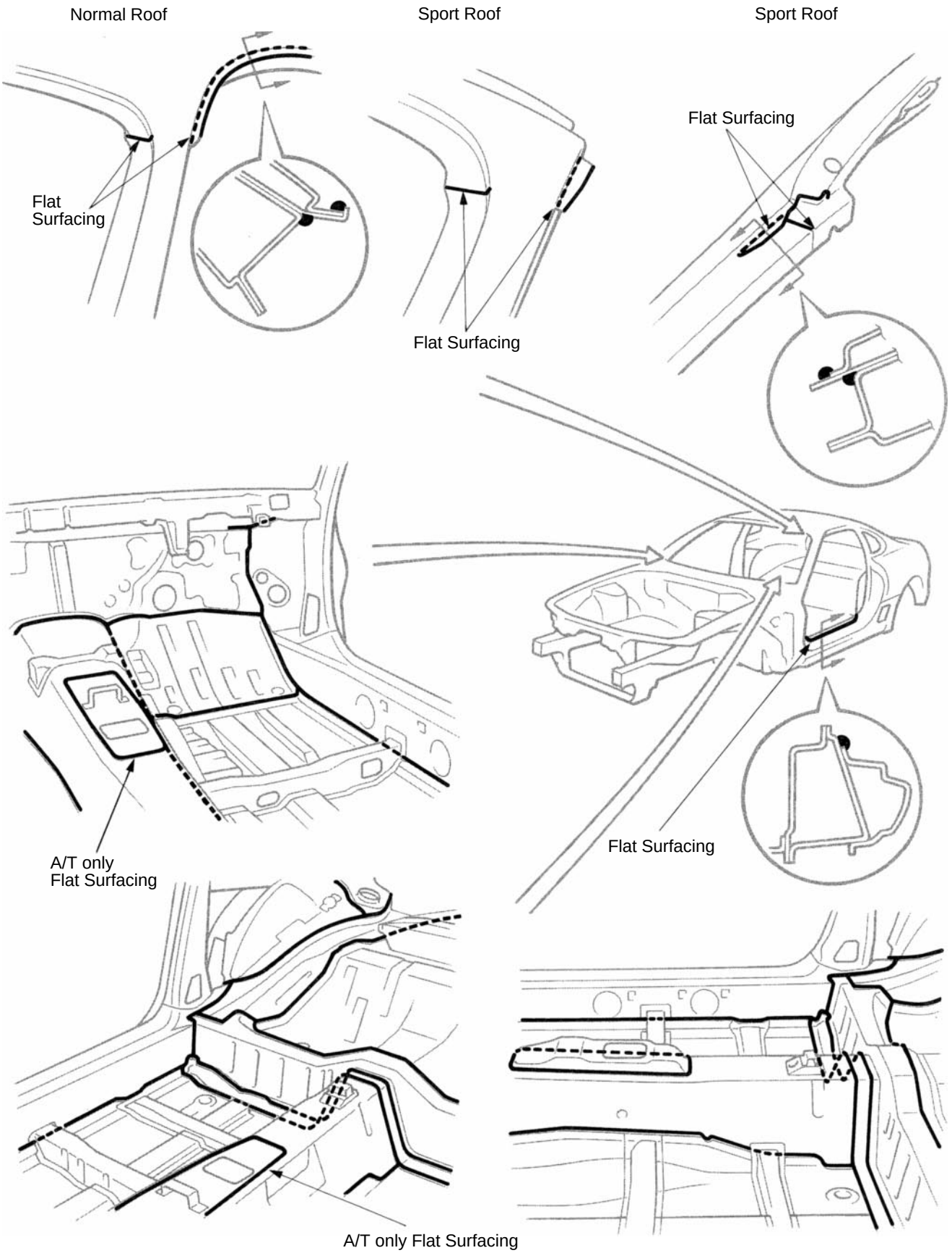
Normal Roof
Sport Roof
Sport Roof
Flat
Surfacing
Flat Surfacing
Flat Surfacing
A/T only
Flat Surfacing
Flat Surfacing
A/T only Flat Surfacing

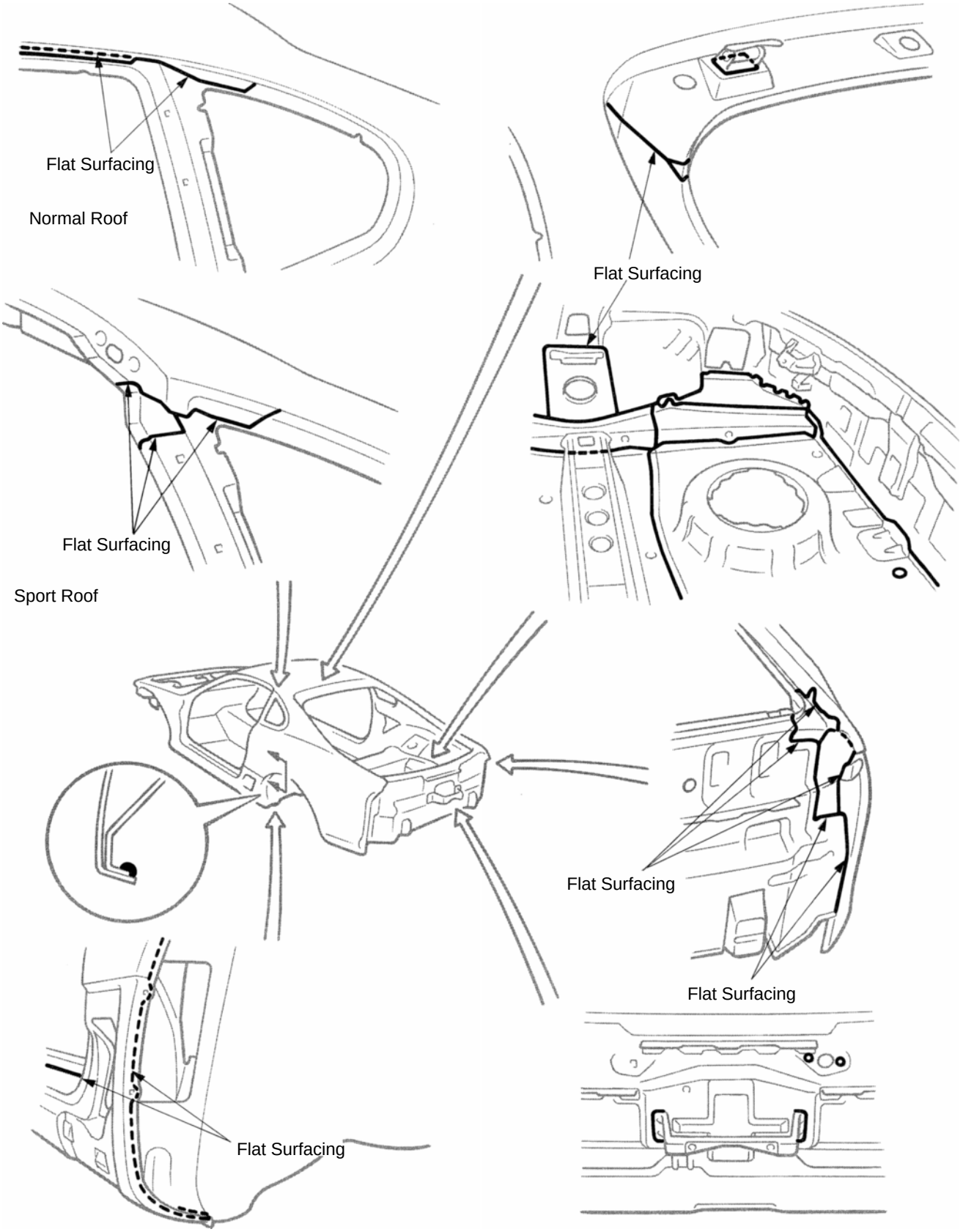
Flat Surfacing
Normal Roof
Flat Surfacing
Flat Surfacing
Sport Roof
Flat Surfacing
Flat Surfacing
Flat Surfacing

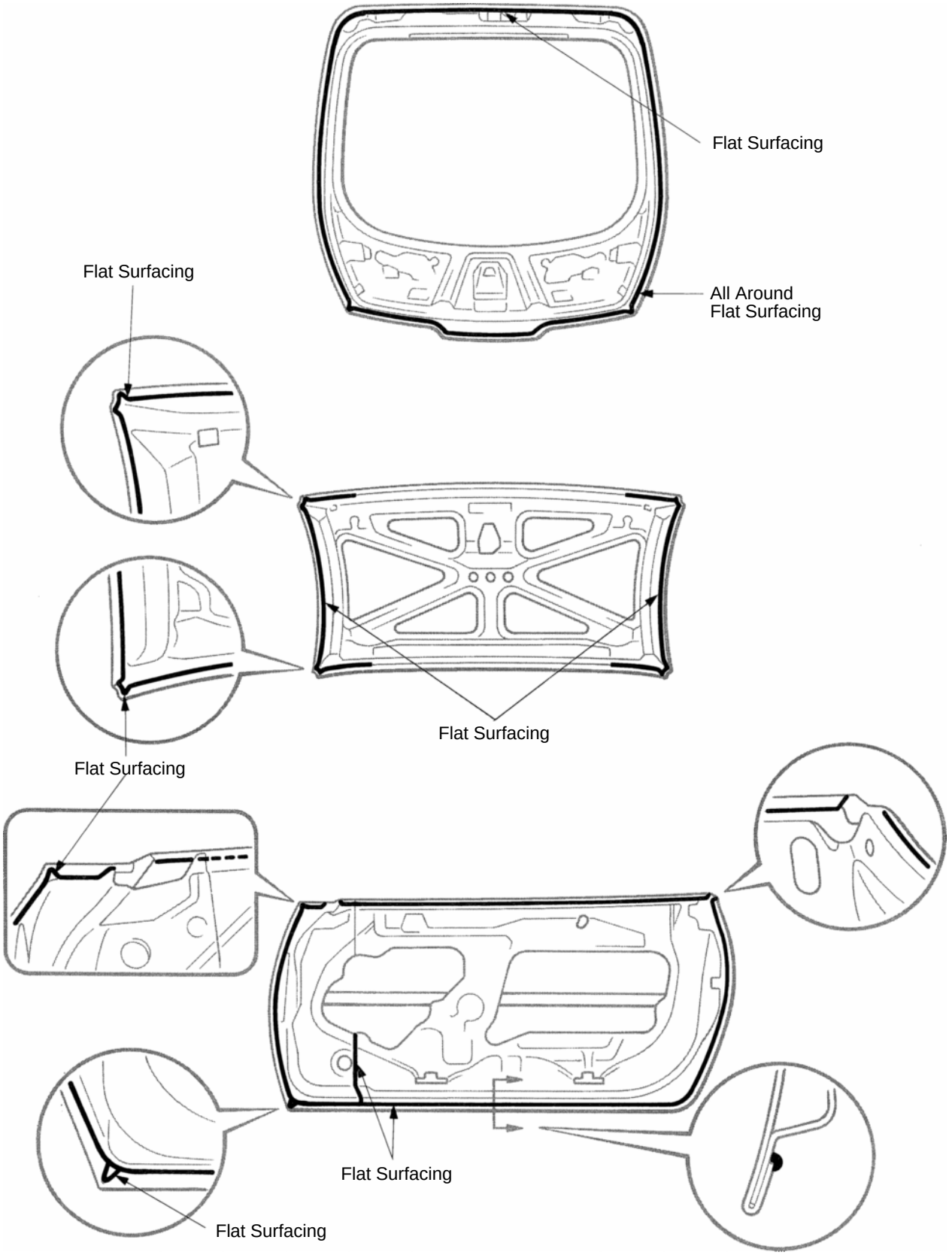
Flat Surfacing
All Around
Flat Surfacing
Flat Surfacing
Flat Surfacing
Flat Surfacing
Flat Surfacing
Flat Surfacing

COWL TOP SIDE PANEL (ASSY)

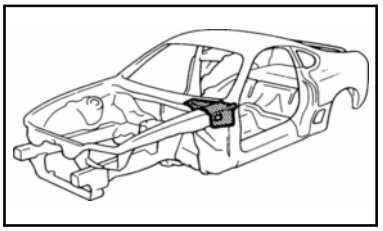

REMOVAL

(Right Side)

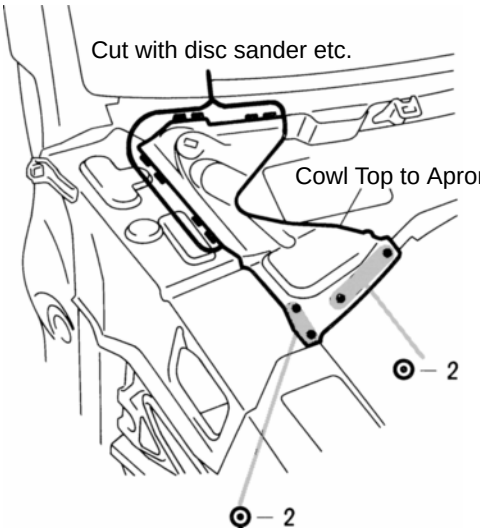

(Left Side)

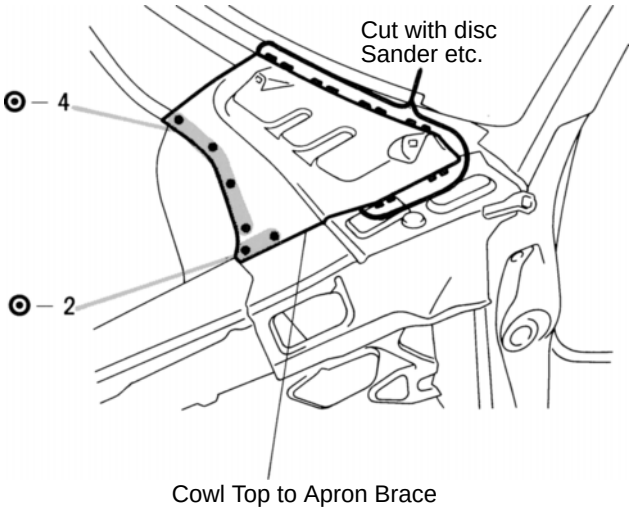

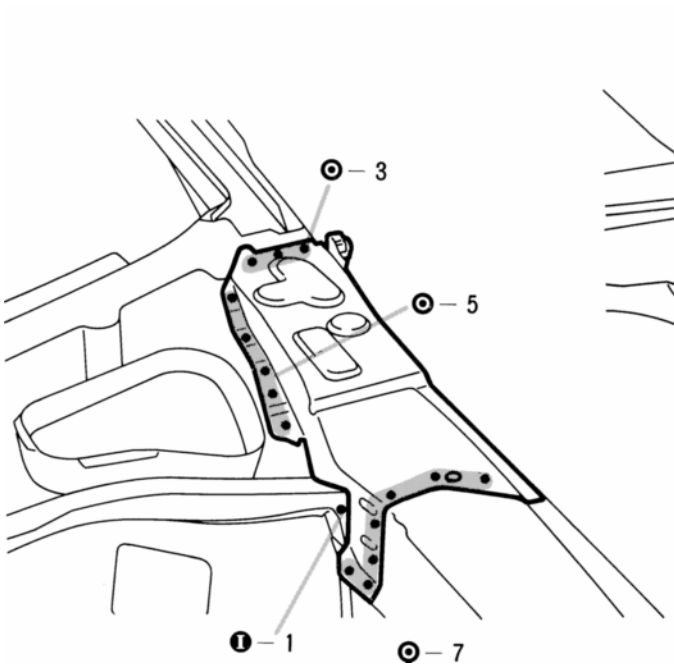

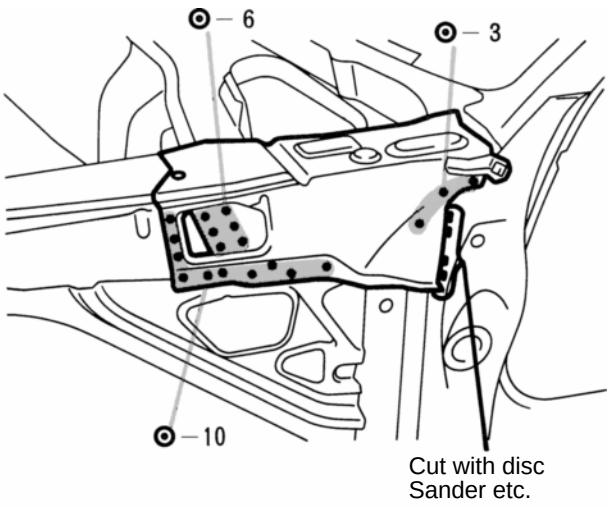

1. After removing the cowl top to apron brace, remove the cowl top side panel.

INSTALLATION

(Right Side)

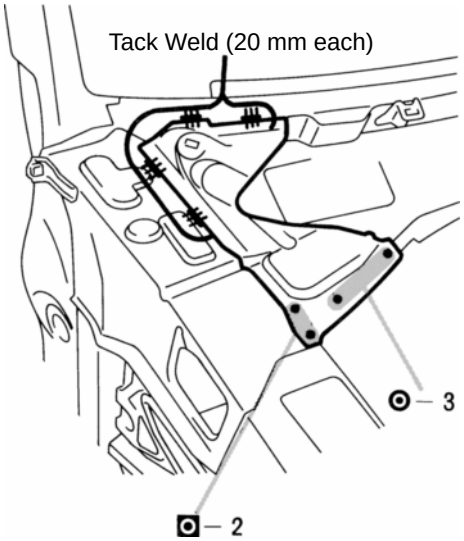

(Left Side)

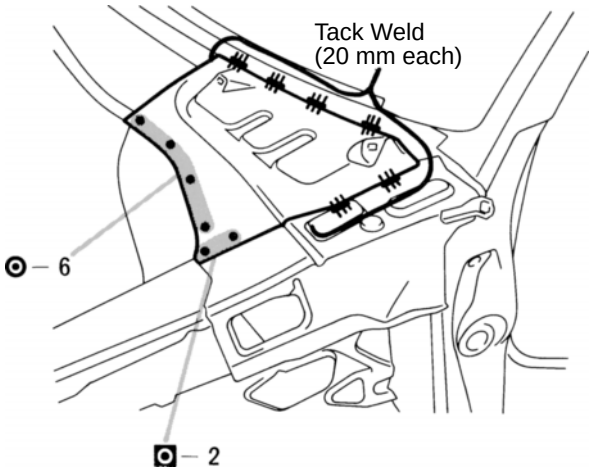

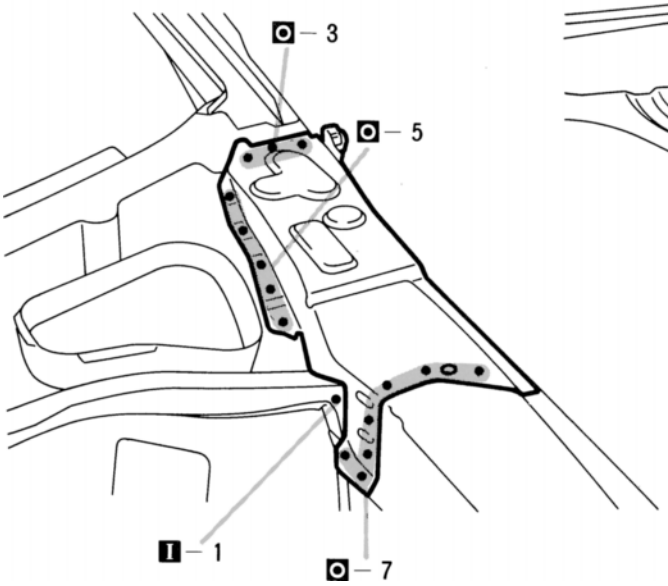

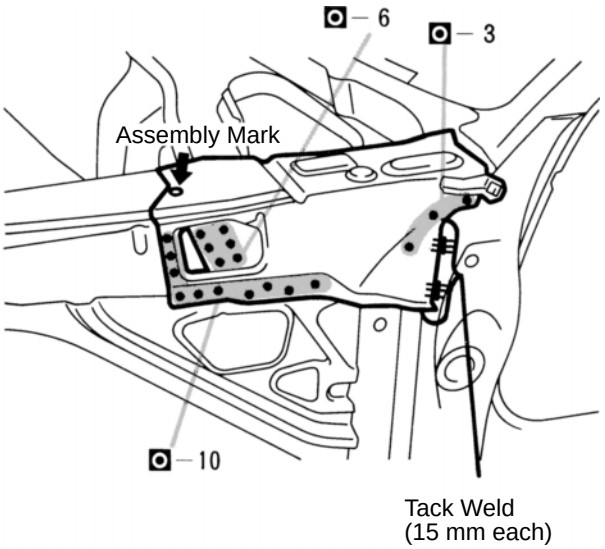

1. When temporarily installing the new parts, determine the installation position by the assembly mark. Then, measure each part in accordance with the body dimension diagram.

mm	in.
15	0.59
20	0.79

COLLISION REPAIR INFORMATION

FOR THE TOYOTA DEALER

TITLE: PAINTLESS DENT REPAIR

SECTION: EXTERIOR BULLETIN # 146

MODELS: TOYOTA, SCION AND LEXUS

DATE: SEPTEMBER 2006

Toyota has developed the following guidelines for the use of "Paintless Dent Repair" (PDR) procedures on all Toyota, Scion and Lexus vehicles.

PDR is used to reduce the cost of repairing minor dents and to avoid color match and refinish issues that may arise. Be sure to choose your PDR service provider carefully and always review their professional qualifications to ensure they are up to date on the latest PDR techniques and procedures.

Repair Precautions

- Always refer to the specific vehicle schematic (available from your PDR provider) for locations where PDR is possible.
- Pay close attention to the locations of accessories and subassemblies that may utilize wire harnesses or drain hoses, etc.
- PDR is often complicated by panel contour, placement of reinforcements, and location of electrical and mechanical components.
- PDR Technicians should be aware of and take the necessary precautions to prevent damage to electrical and mechanical components while performing PDR repairs.

General Repair Guidelines

- The PDR process should only be considered when the exterior paint surface is not broken or cracked. A 30X power hand held microscope (available from most body shop jobbers) should be used to determine if the paint surface shows evidence of cracking.
- Pushing and prying on the back side of body panels can disrupt the factory rust and corrosion protective coatings. PDR technicians must take steps to prevent corrosion coating damage or restore it with approved equivalent materials. PDR service companies performing PDR repairs should be knowledgeable and capable of restoring corrosion protective coatings damaged during PDR repairs.

PLEASE ROUTE THIS BULLETIN TO YOUR COLLISION REPAIR CENTER MANAGER AND COLLISION REPAIR TECHNICIANS

- Prying, pushing, or pulling on body panels may cause stretching beyond the flexible limits of the paint coatings causing delamination (paint coating separation) or micro-cracking. These conditions may not be immediately detectable (use a 30X magnifying hand-held microscope to inspect for cracks).

  Important: The PDR process uses special tools to access otherwise inaccessible areas. Drilling of holes, prying away or cutting reinforcements or welded structural components to gain access to perform a PDR is strictly prohibited and, if done, may void the manufacturer's corrosion protection warranty.

- Using blocks or wedges between window moldings and door glass (for tool access) is also prohibited. This process can damage window moldings and reduce the factory designed-in pressure of the inner belt molding on the base of the door glass.
- Window guard protectors must be used to protect window glass during PDR operations.

Specific Repair Guidelines

- Panels with multiple dents, including hail damage, may be considered for PDR as long as the original panel integrity (strength) is maintained. If a panel exhibits any evidence of loss of strength due to the number of dents, the panel should not be considered for PDR. If after performing a PDR repair the panel exhibits evidence of loss of strength, the panel must be repaired using conventional body shop processes.
- Round/oval dents may be removed if they are 2 inches or more away from panel edges or body lines and are no larger than the diameter of a soft ball.
- Creases that are up to 4" long may be considered for removal.

  Note: sharp creases cannot be removed using PDR.

- Dents or protrusions, of up to 6mm, from the reverse side, on hoods, trunks, fenders, and quarter panels may be considered, but extreme caution must be used during this type of repair due to the higher potential of damaging the paint surface. Remember no broken paint.

PLEASE ROUTE THIS BULLETIN TO YOUR COLLISION REPAIR CENTER MANAGER AND COLLISION REPAIR TECHNICIANS

FIT STANDARDS

After doors and the engine hood are installed, be sure to perform fit adjustment to prevent abnormal wind noise and ensure a good appearance.

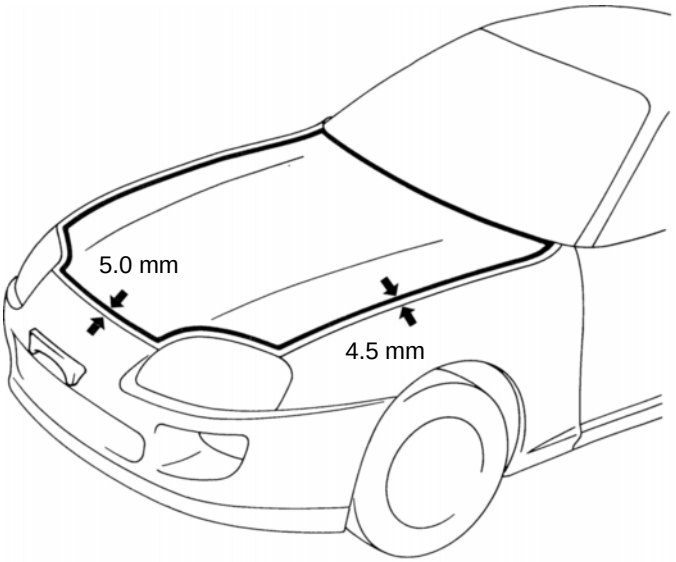

mm	in.
4.5	0.177
4.6	0.181
5.0	0.197
6.5	0.256
9.2	0.362

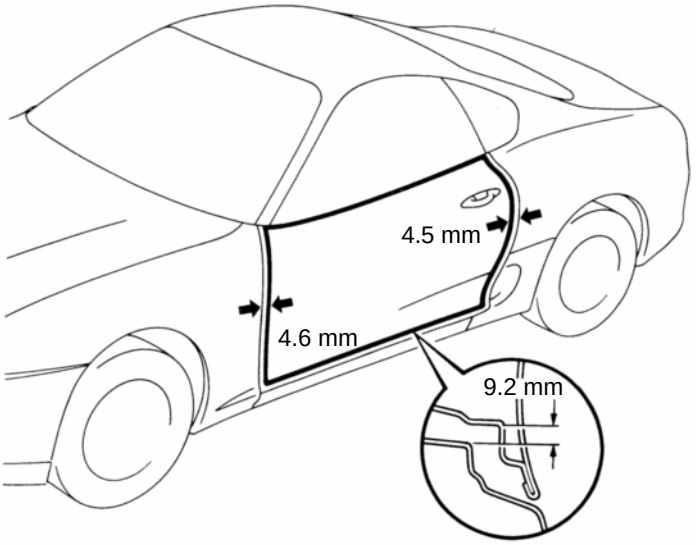

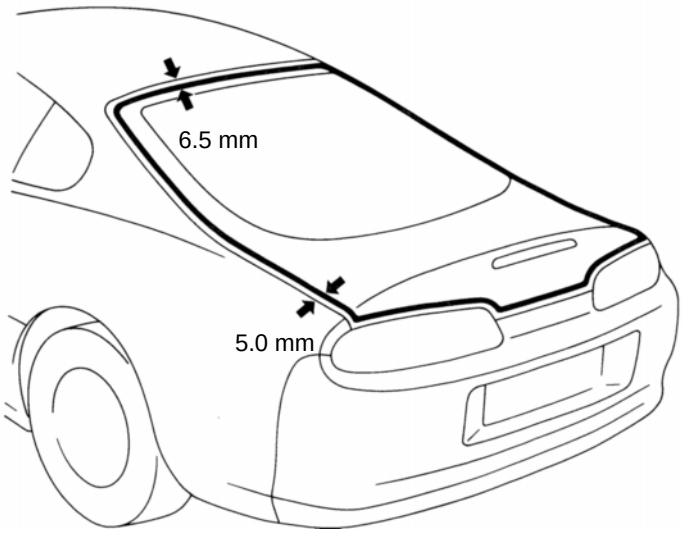

FOAMED MATERIAL APPLICATION AREAS

The sections shown in the figure below are filled with foamed material to provide noise insullation.
After repairing these sections or their peripheries, refill with foamed materials.
HINT:

1. *Use the service holes located on the reverse side of the body panel to refill with foamed materials.*
2. *When handling foamed material, follow the directions of the material's manufacturer.*



NORMAL ROOF

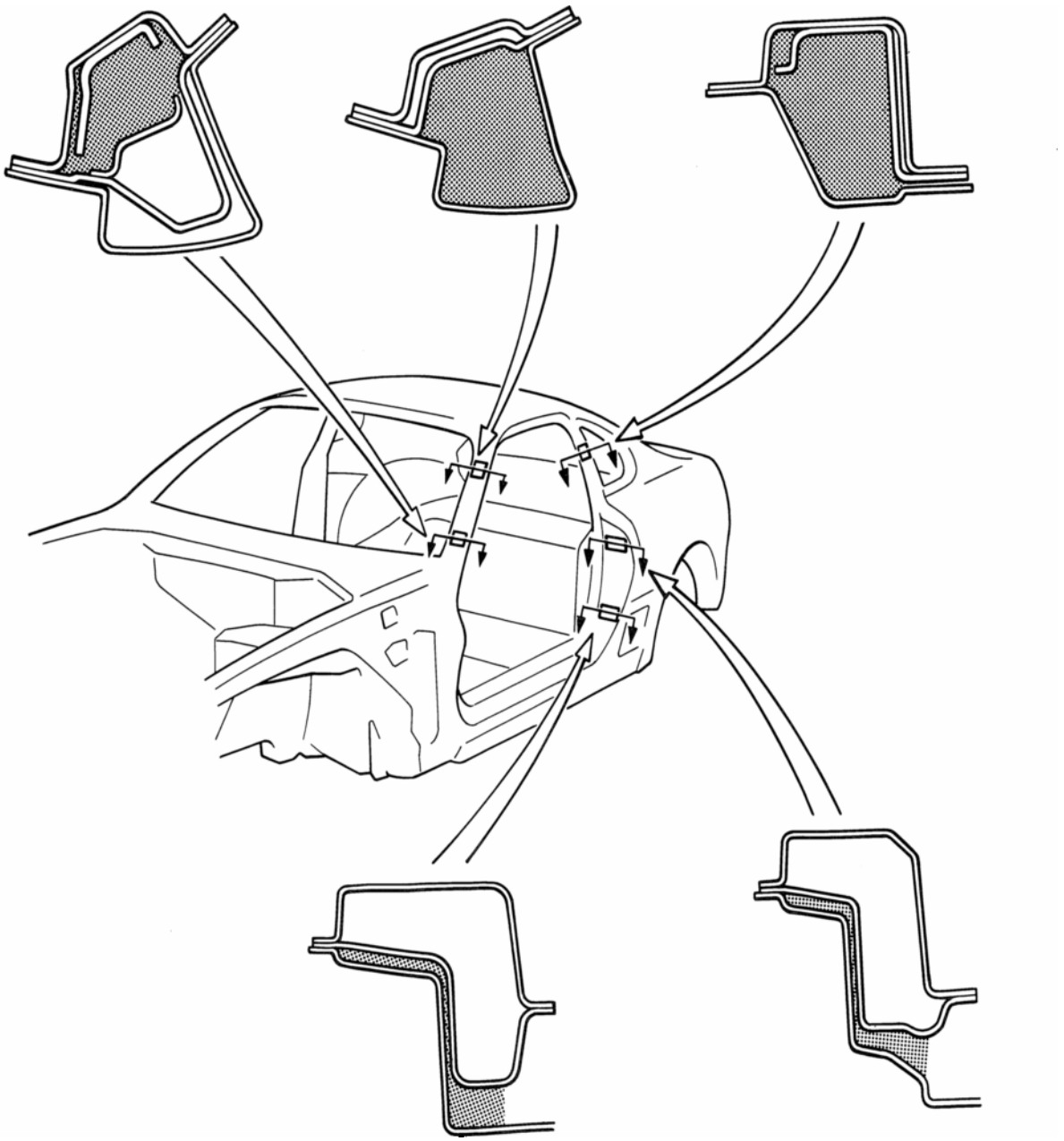

SPORT ROOF

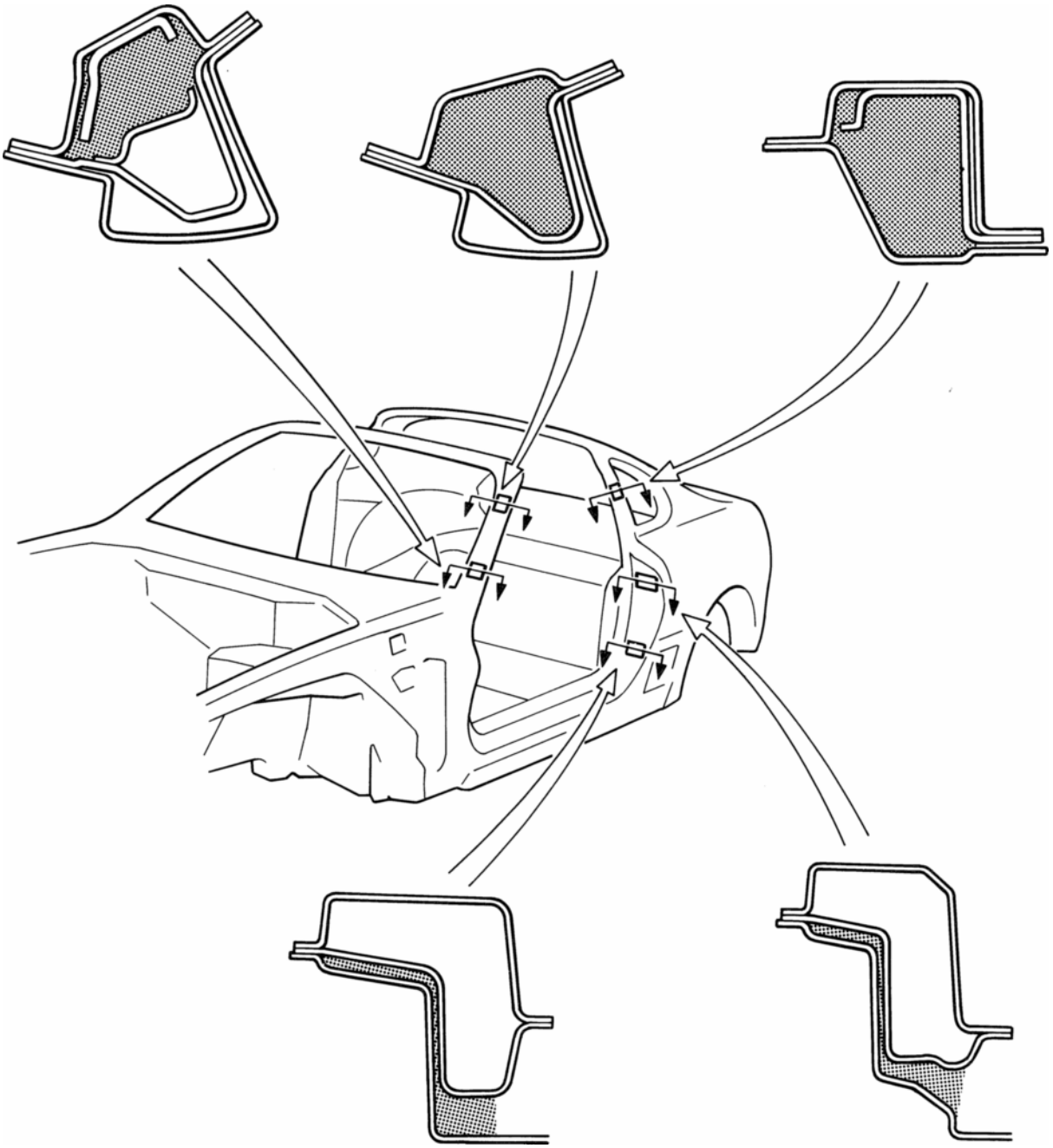

FRONT FENDER APRON (ASSY)

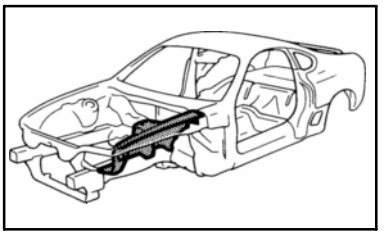

REMOVAL (With the radiator upper support removed.)

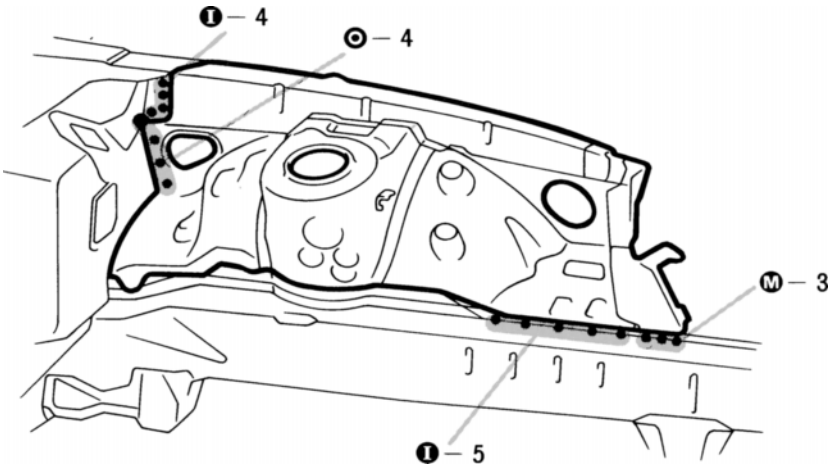

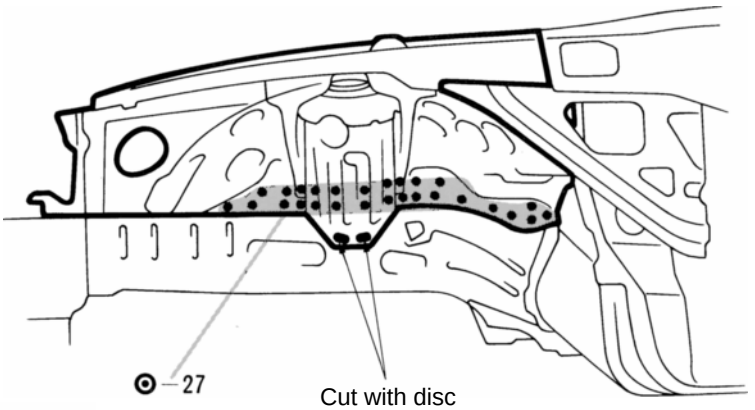

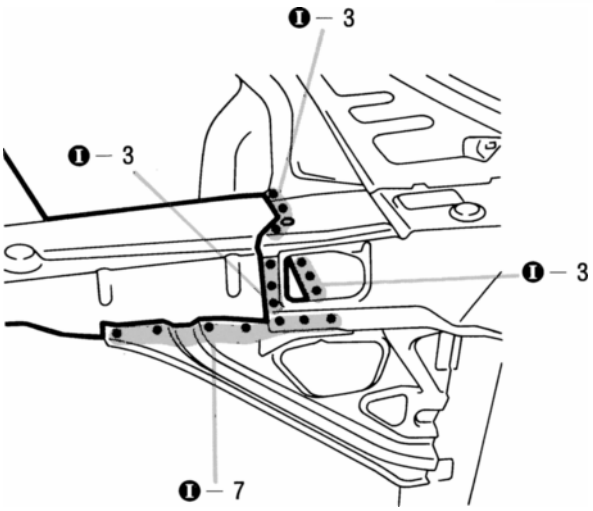

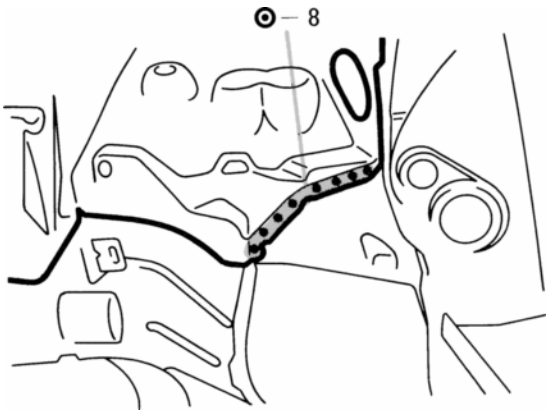

INSTALLATION

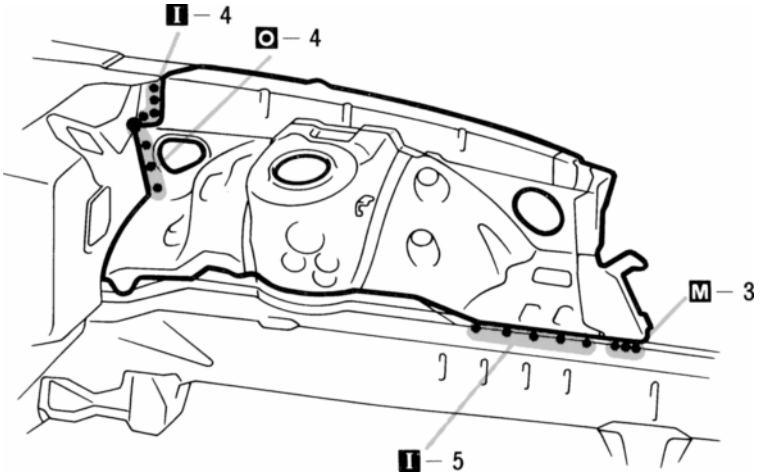

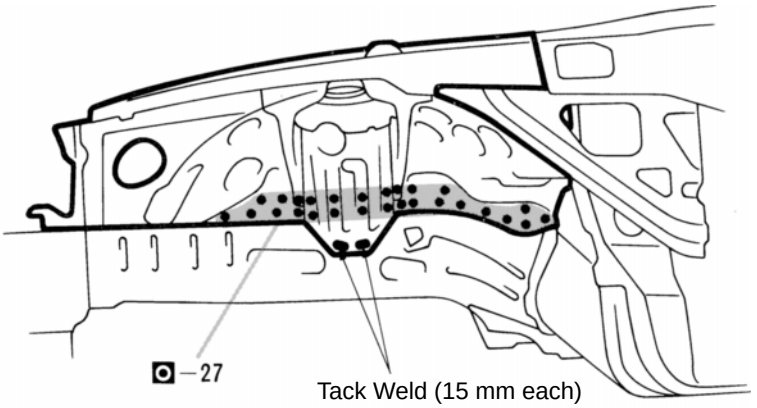

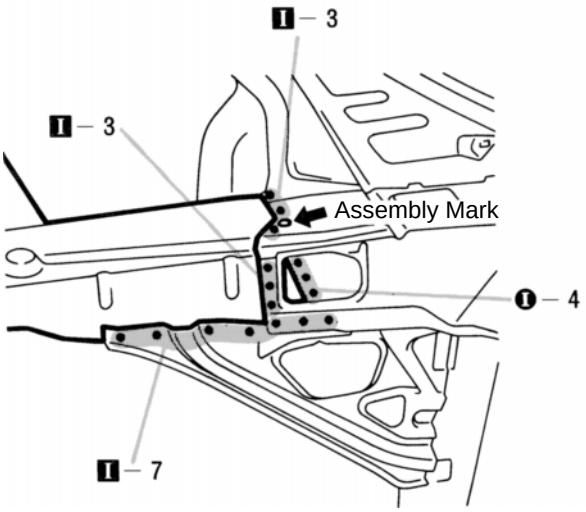

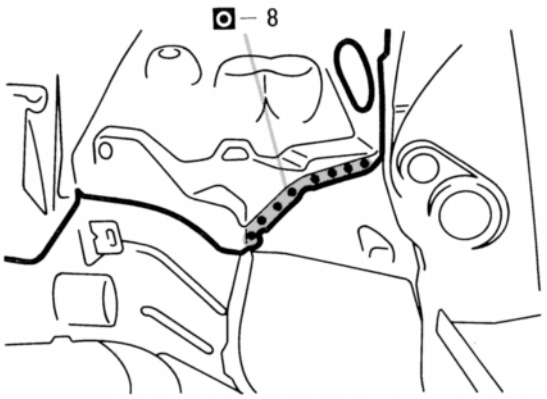

1. When temporarily installing the new parts, determine the installation position by the assembly mark.
2. Measurements must be accurate with the body dimension diagram, as this affects the front wheel alignment.
3. Temporarily install the front fender and hood, and check the fit.

mm	in.
15	0.59

FRONT SIDE MEMBER (ASSY)

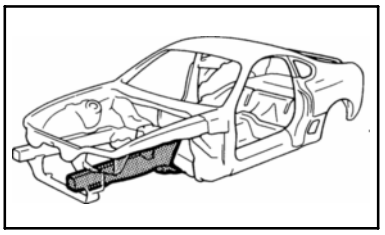

REMOVAL (With the front crossmember and front fender apron removed.)

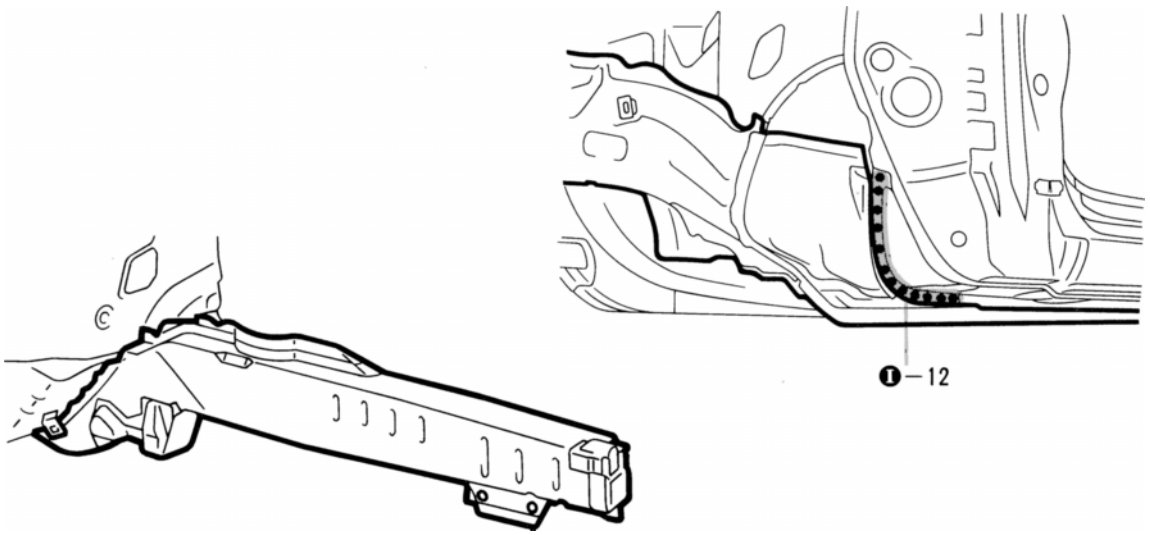

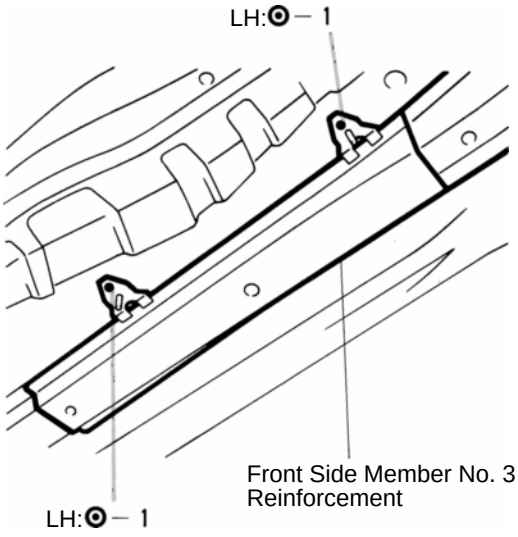

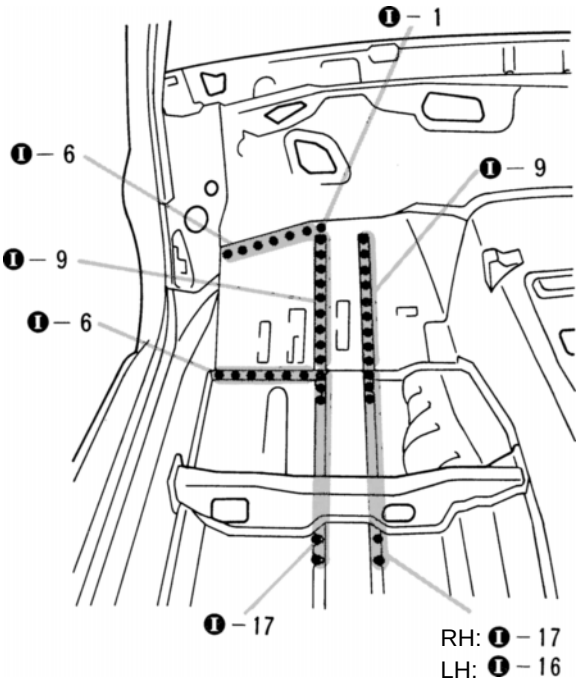

1. Replace the front side member No. 3 reinforcement at the same time.

INSTALLATION

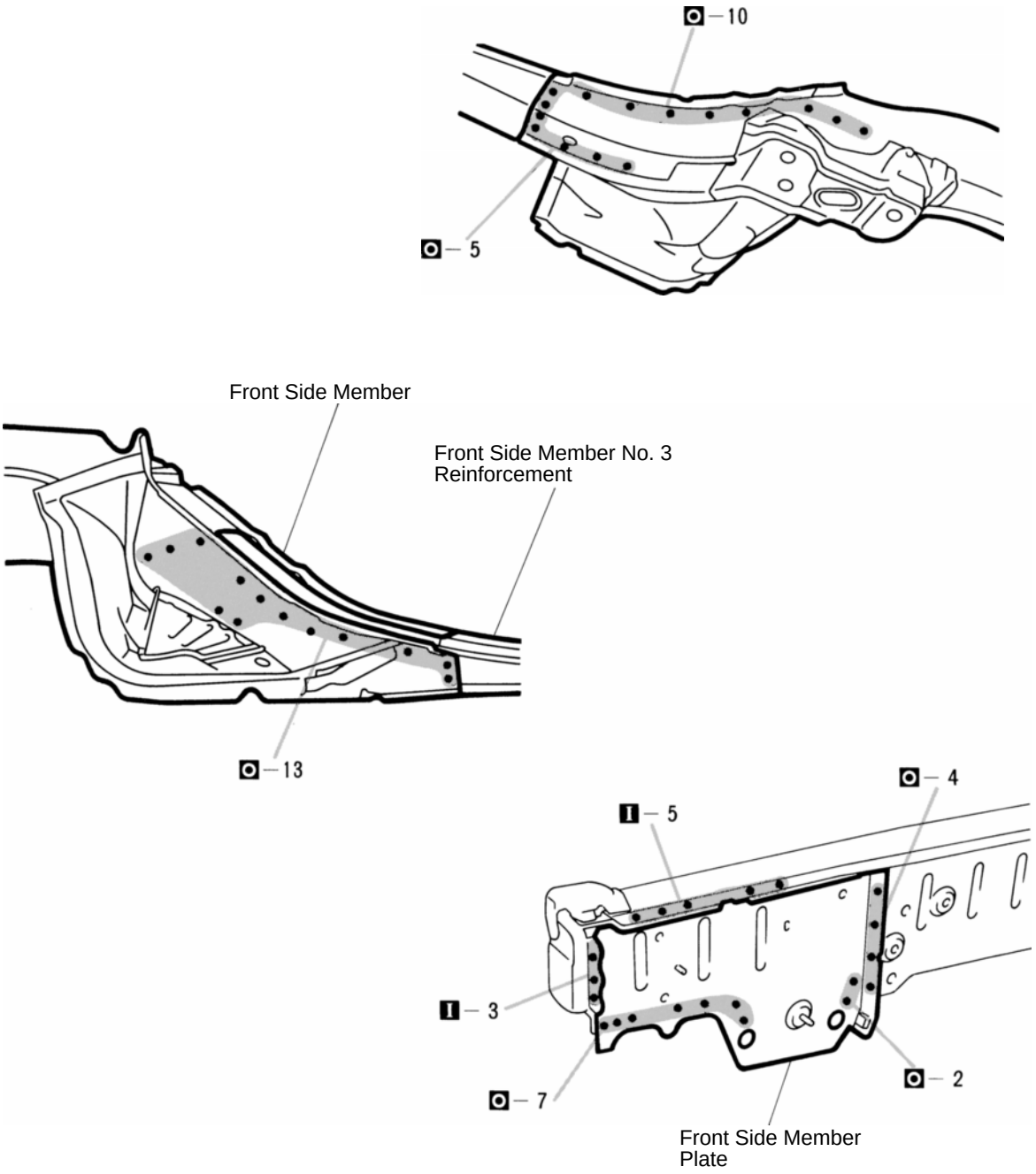

1. Before temporarily installing the new front side member, weld the front side member No. 3 reinforcement with standard points.

2. Temporarily install the new parts and measure each part in accordance with the body dimension diagram.

HINT: Make sure each measurement is correct, as this part affects the front wheel alignment.

INSTALLATION (Cont'd)

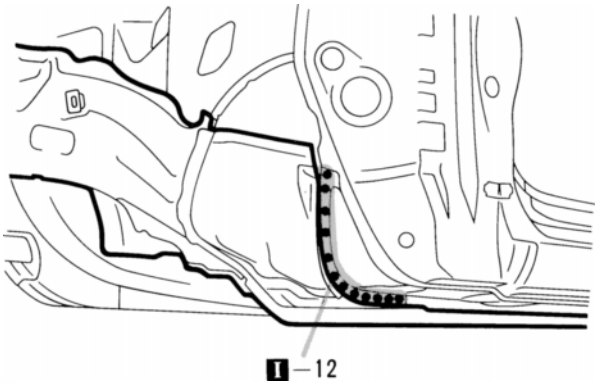

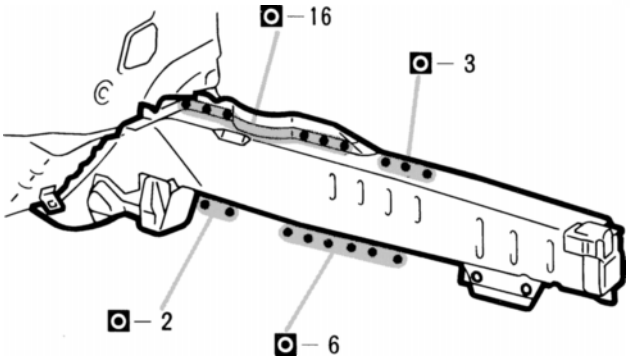

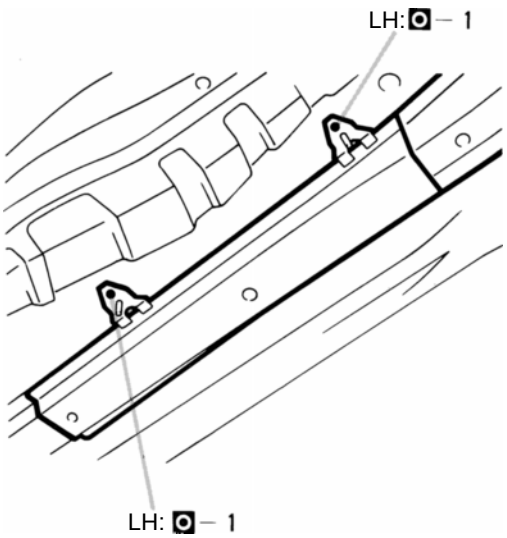

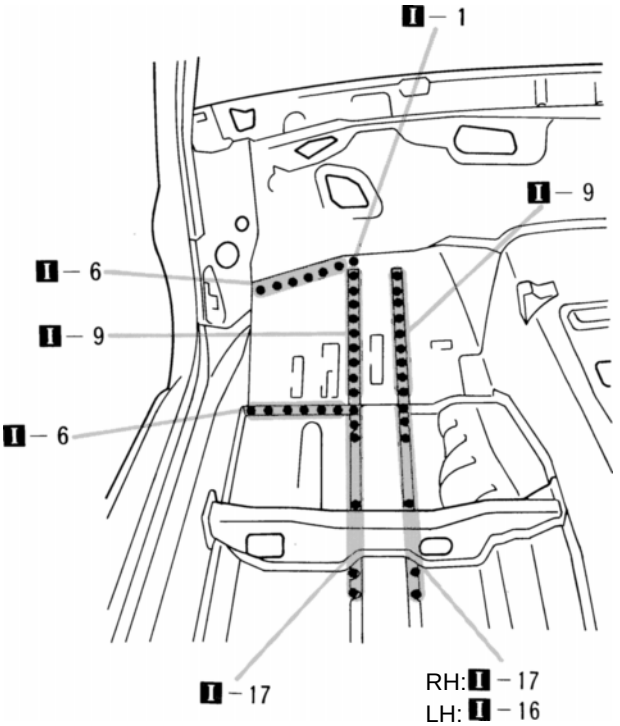

FRONT BODY PILLAR (CUT): SPORT ROOF

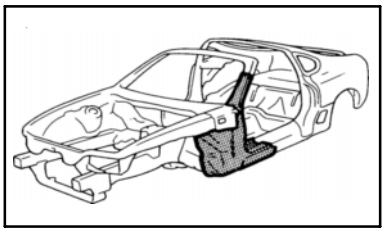

REMOVAL (With the cowl top side panel removed.)

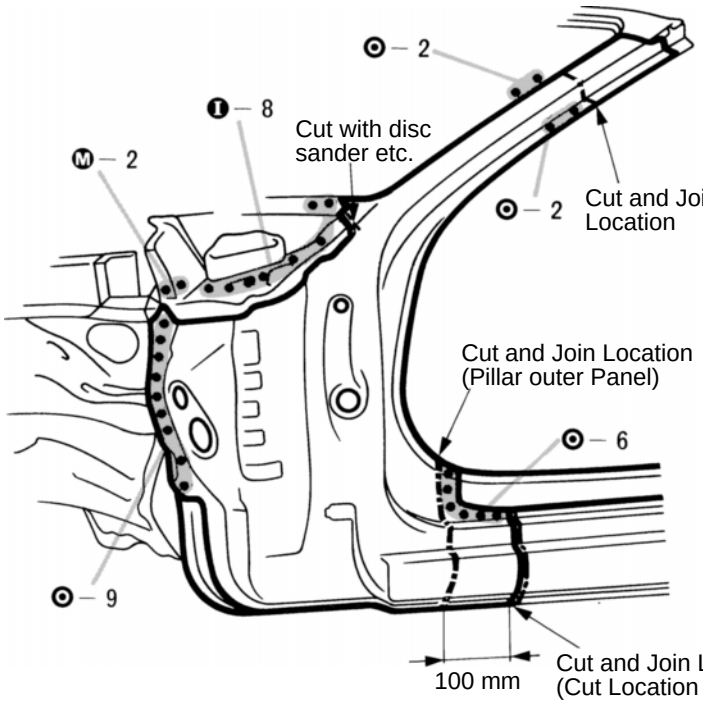

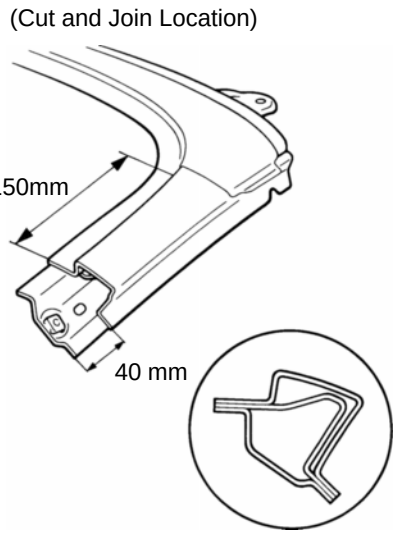

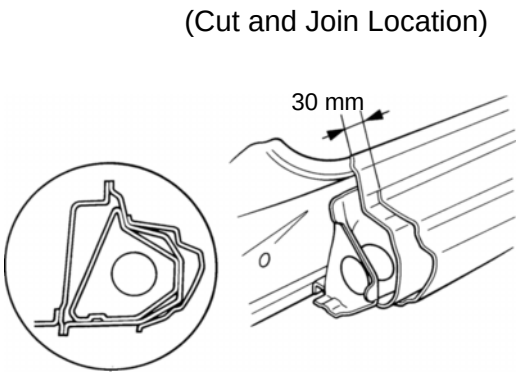

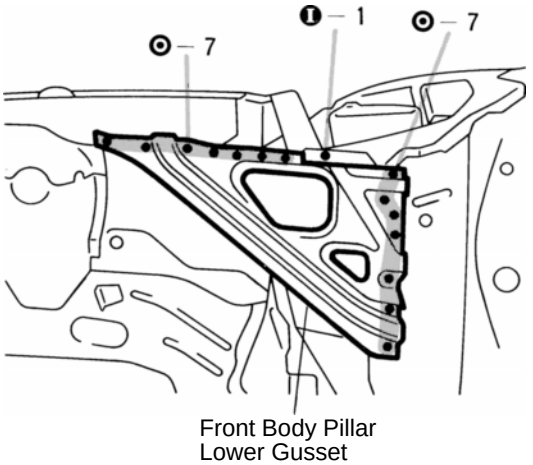

1. Cut and join the part at the locations shown above.

HINT:

1) Cut the front body pillar outer panel at a 40 mm (1.57in.) offset from the inner panel as shown.

2) The cut location of the rocker panel reinforcement is made 30 mm (1.18 in.) to the front of the rocker outer panel cut location, as shown.

2. The rocker panel reinforcement cut location is made 100mm (3.94 in.) to the front of the outer panel cut location, avoid damaging the No. 4 reinforcement.

mm	in.
30	1.18
40	1.57
100	3.94
150	5.91

REMOVAL (Cont'd)

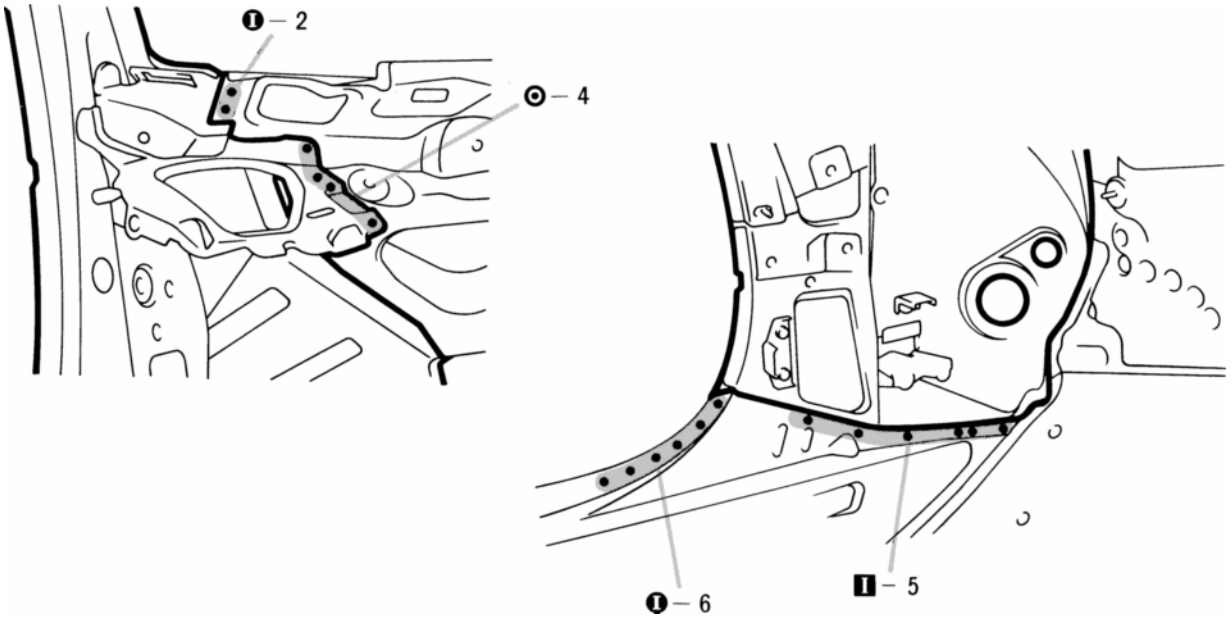

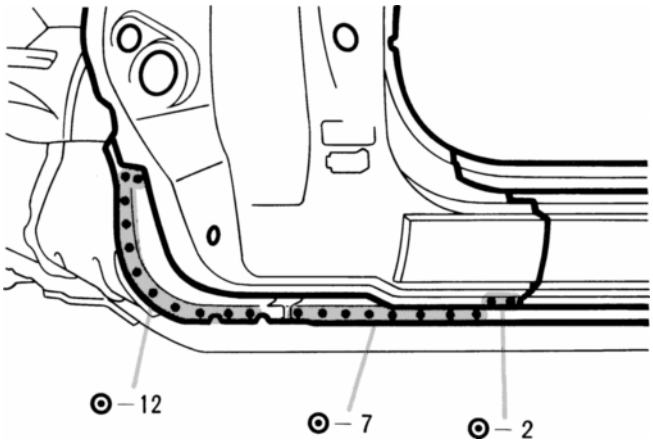

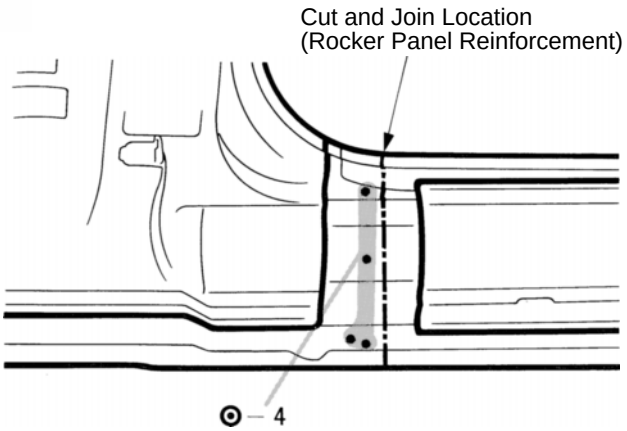

3. After removing the front body pillar lower gusset, remove the front body pillar.

INSTALLATION

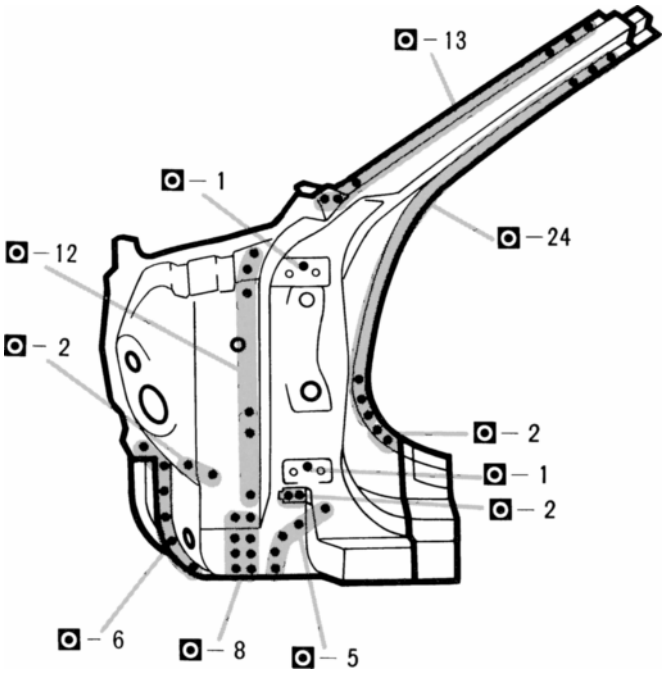

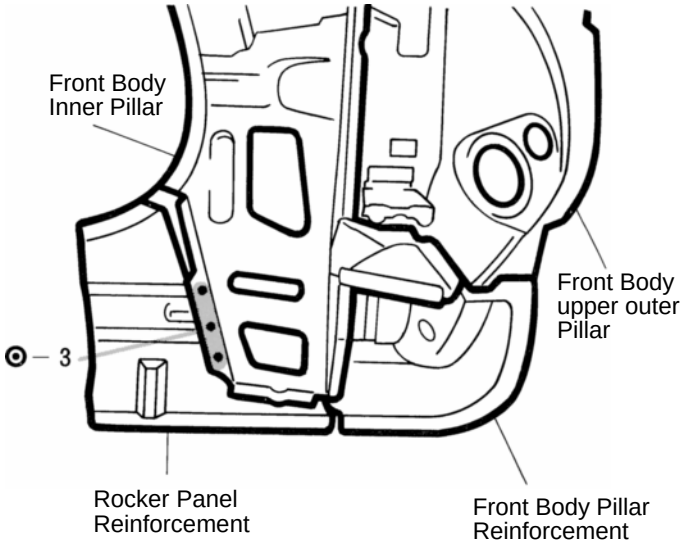

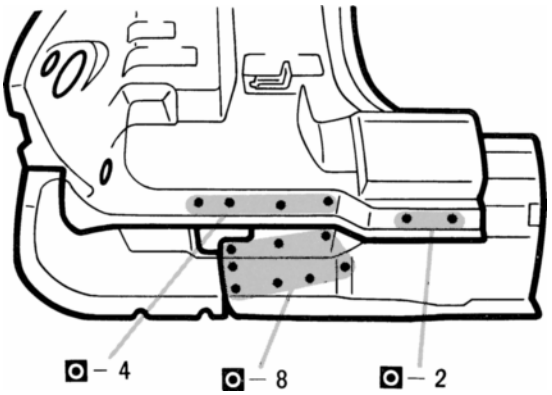

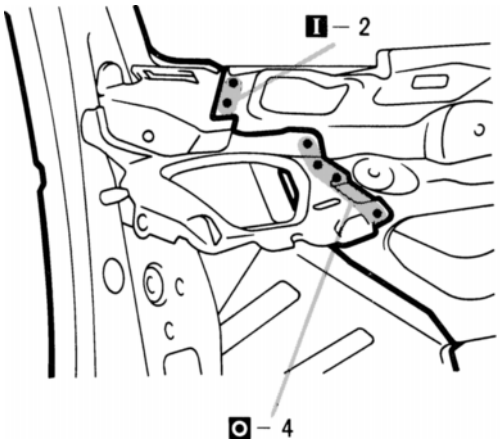

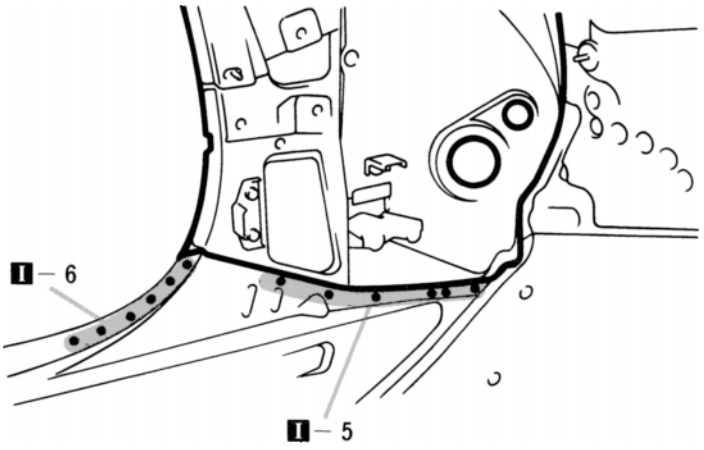

1. Before installing the outer panel, inner reinforcement, inner pillar and rocker panel reinforcement, assemble the parts and weld them according to the standard number of welds as shown above.
2. Temporarily instal the new parts and measure each part in accordance with the body dimension diagram.

INSTALLATION (Cont'd)

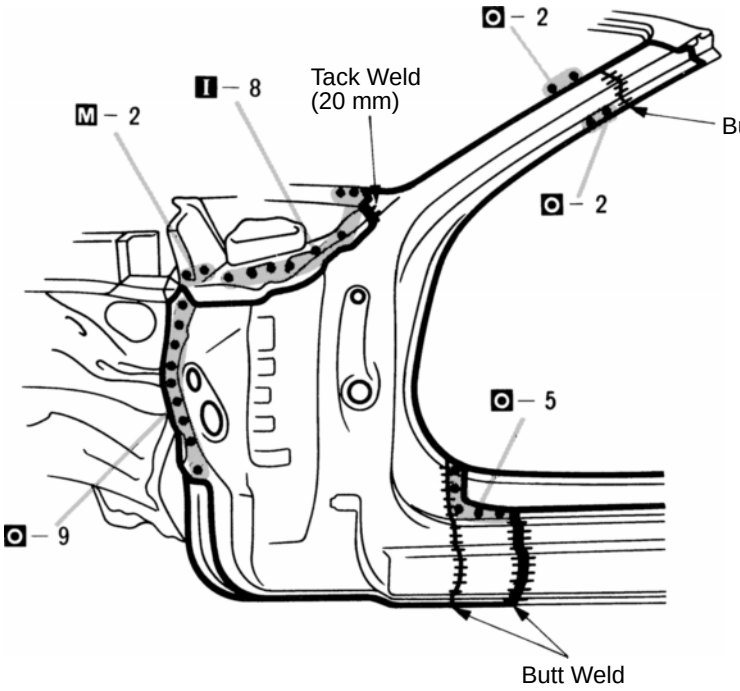

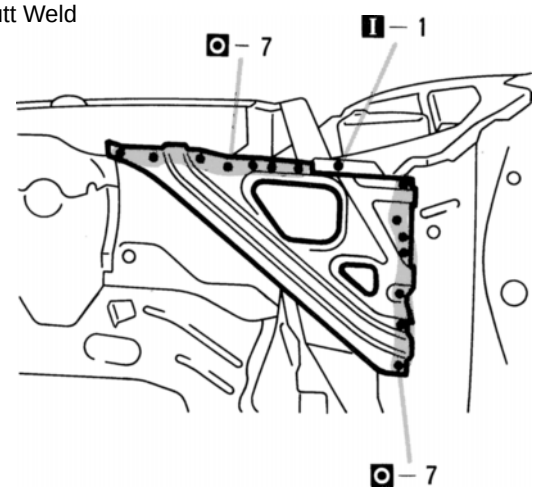

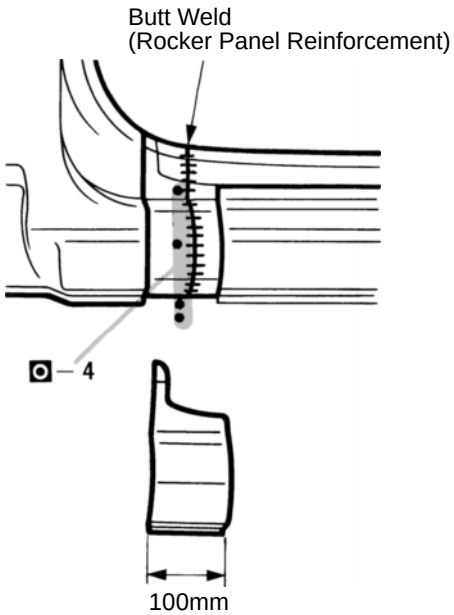

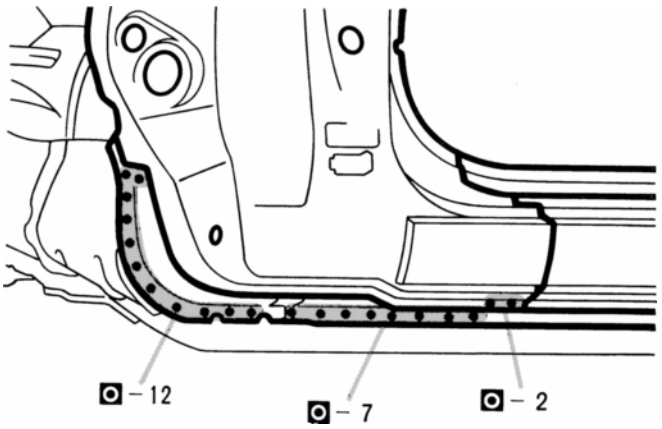

mm	in.
20	0.79
100	3.94

3. Before welding the new parts, check the fit of the front door, front fender and windshield glass.
4. A 100mm (3.94 in.) wide access hole should be made in the rocker outer panel. After butt welding the rocker panel reinforcement, reat-tach the rocker outer panel by welding.
5. After installing the new parts, apply foamed material.

HINT: For the foamed material application areas, refer to page AP-4 .

FRONT APRON TO COWL SIDE UPPER MEMBER (ASSY)

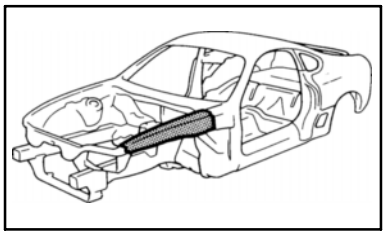

REMOVAL (With the front fender front apron removed.)

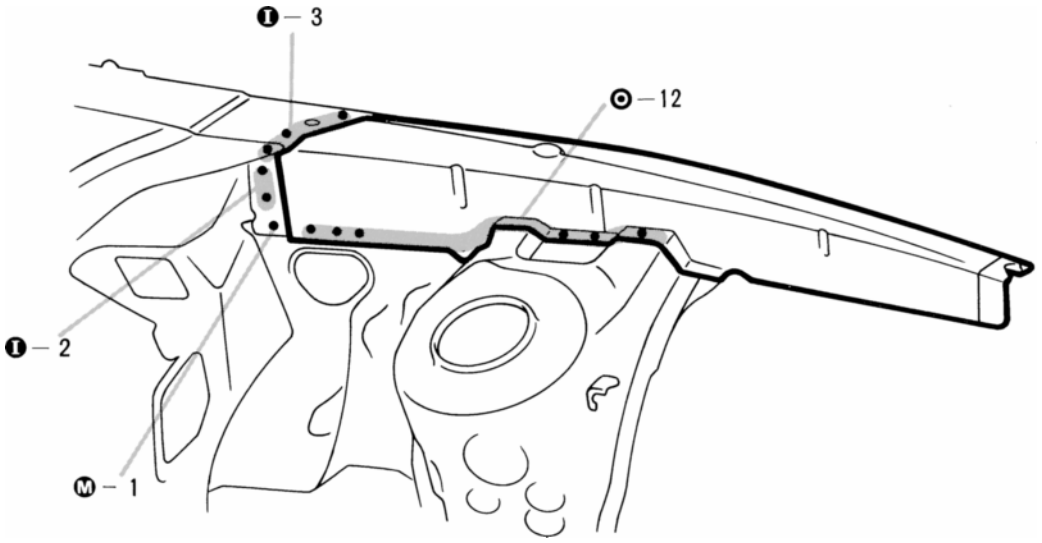

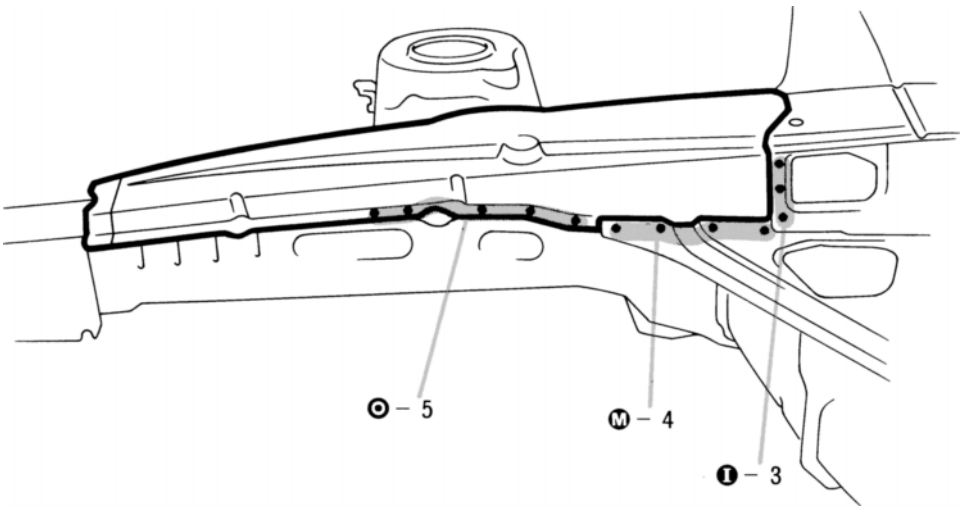

INSTALLATION

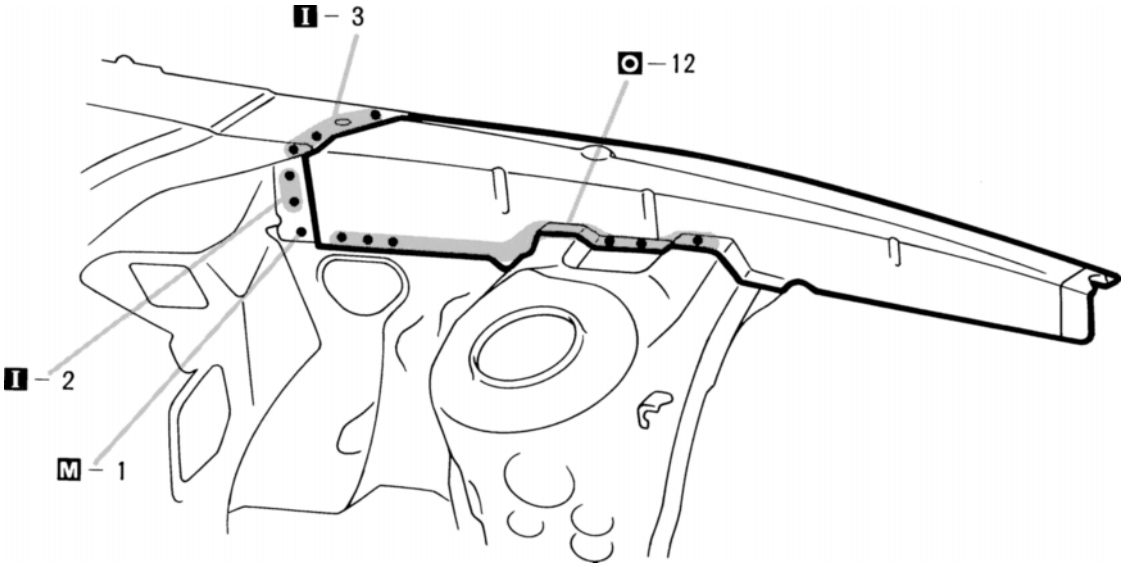

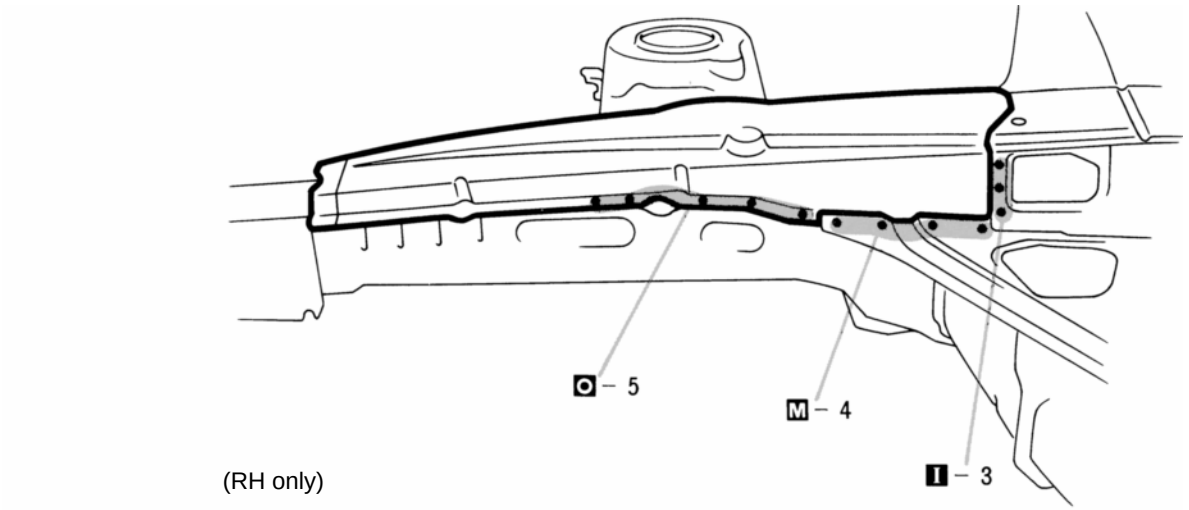

(RH only)

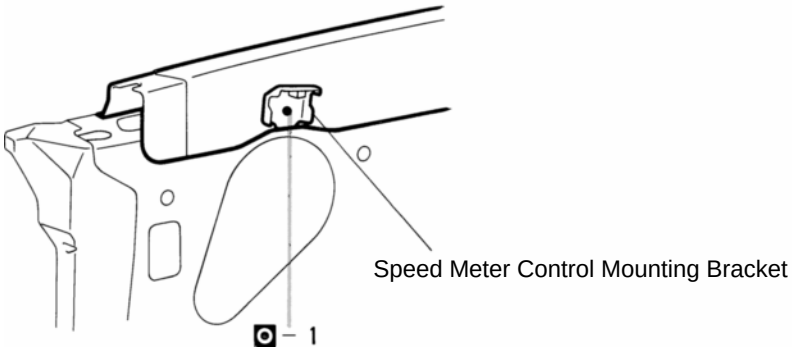

1. Temporarily install the new parts and measure each part in accordance with the body dimension diagram.
2. Temporarily install the front fender and hood, and check the fit.

FRONT BODY PILLAR (CUT): Normal Roof

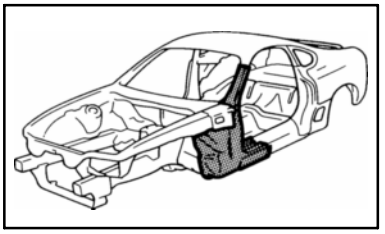

REMOVAL (With the cowl top side panel removed.)

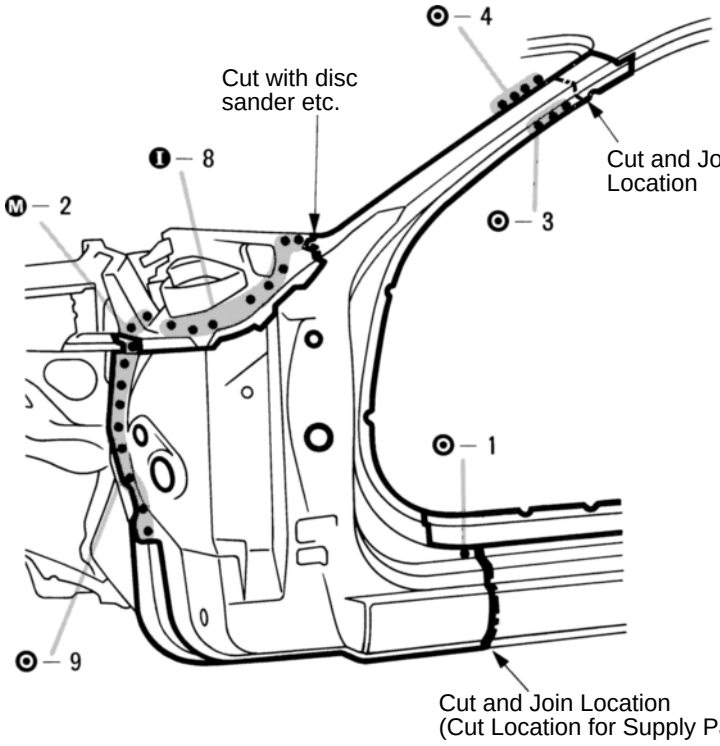

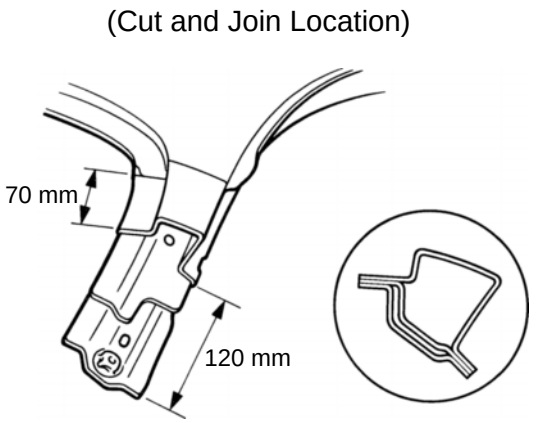

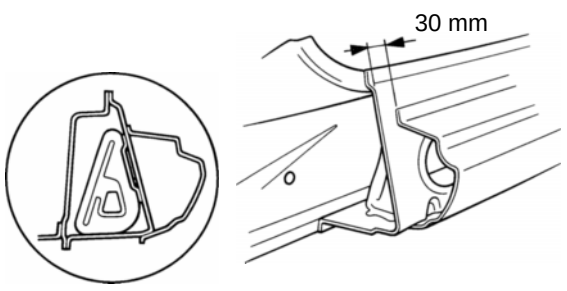

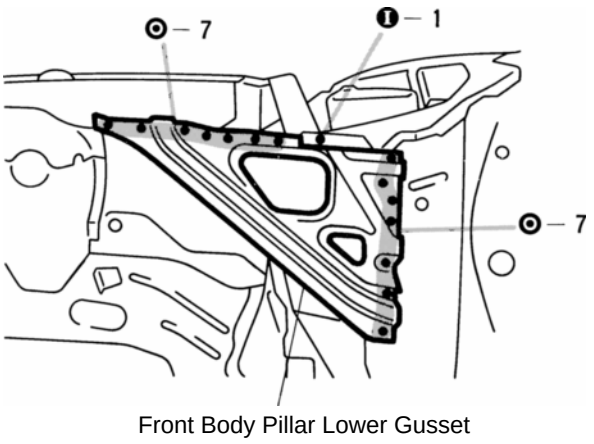

1. Cut and join the parts at the locations shown above.

HINT:

1) Cut the front body pillar outer panel at a 120 mm (4.72in.) offset from the inner panel as shown above right.

2) The cut location of the rocker panel reinforcement is made 30mm (1.18in) to the front of the rocker panel inner cut location, as shown.

2. After removing the front body pillar lower gusset, remove the front body pillar.

mm	in.
30	1.18
70	2.76
120	4.72

REMOVAL (Cont'd)

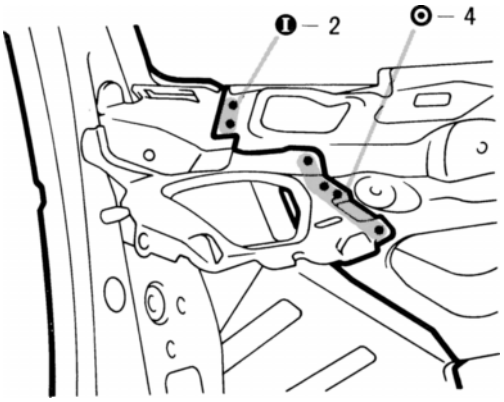

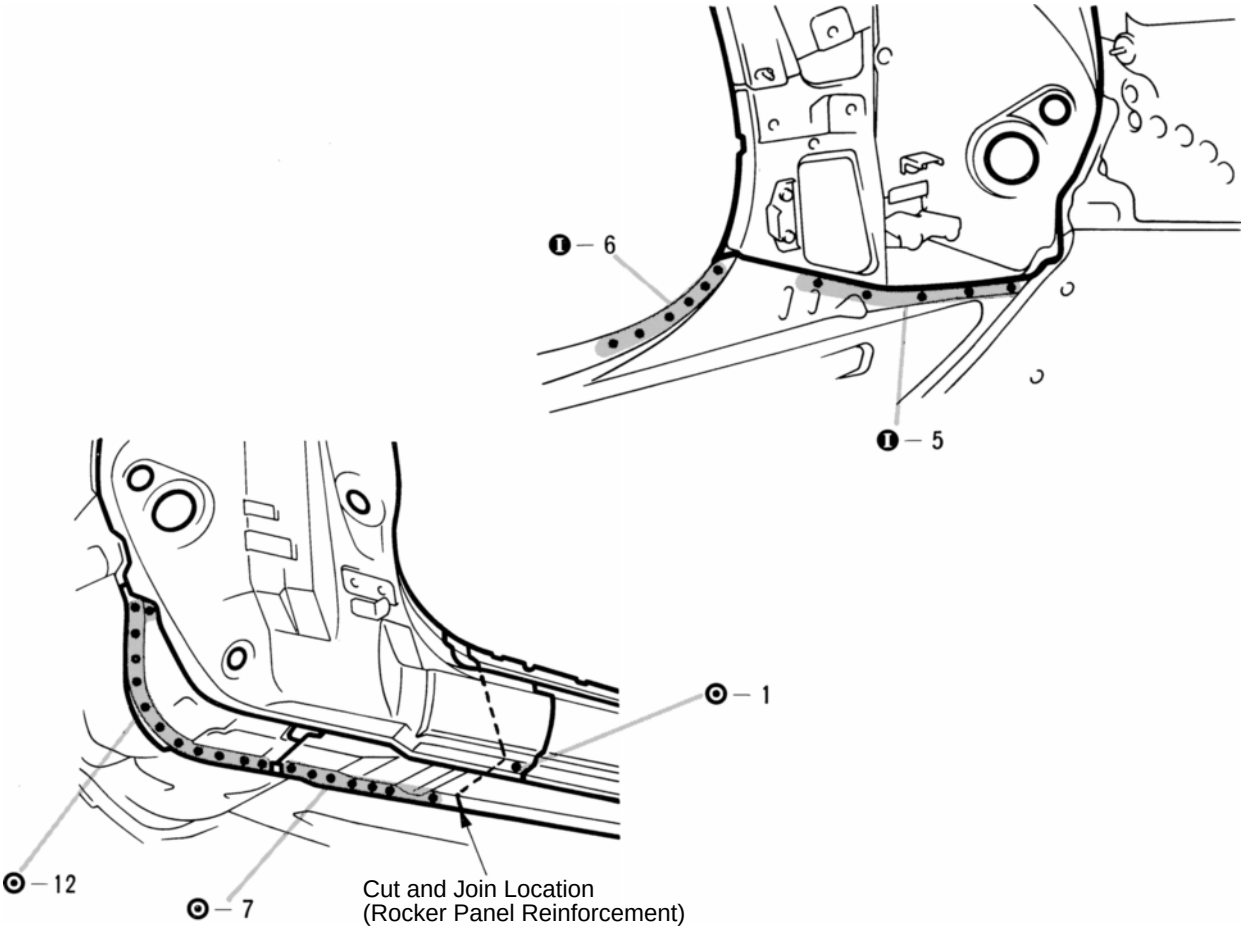

INSTALLATION

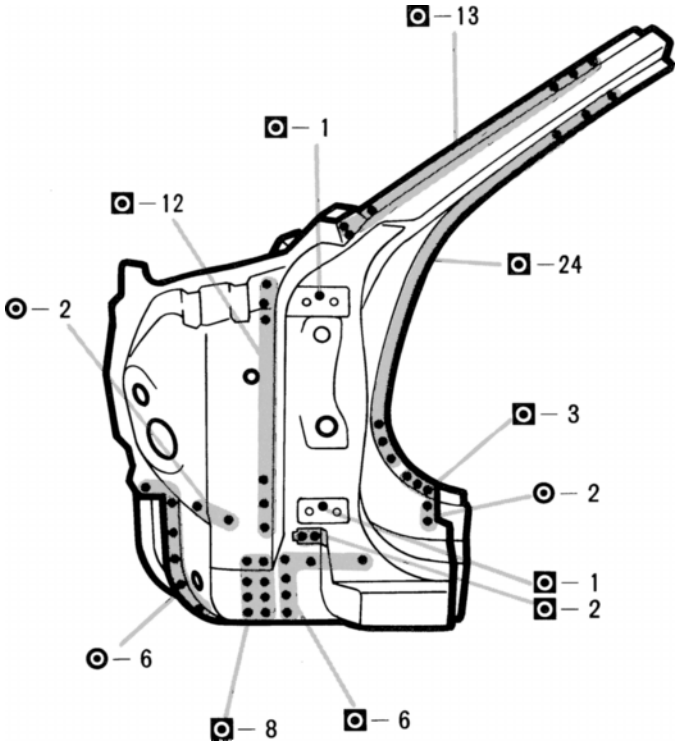

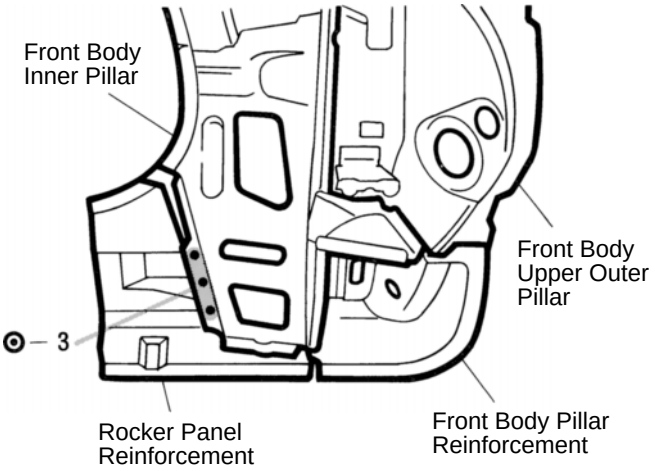

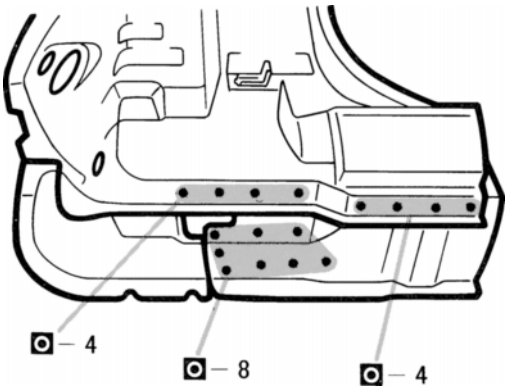

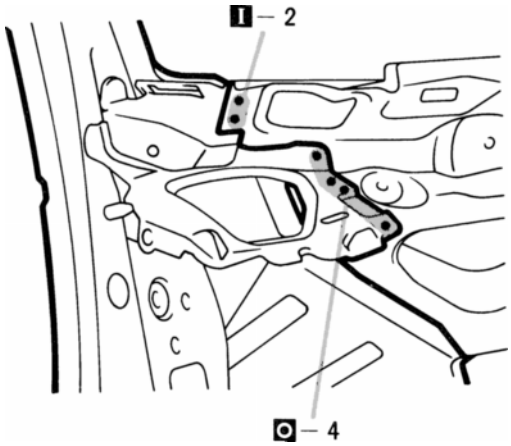

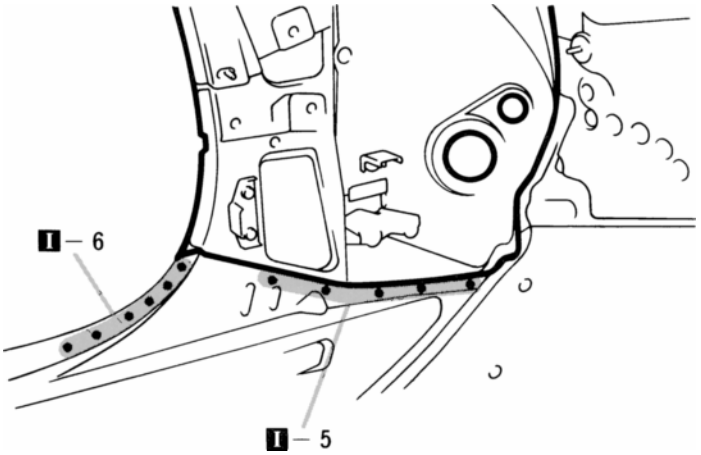

1. Before installing the outer panel inner reinforcement, inner pillar and rocker panel reinforcement, assemble the parts and weld them according to the standard number of welds as shown above.
2. Temporarily install the new parts and measure each part in accordance with the body dimension diagram.

INSTALLATION (Cont'd)

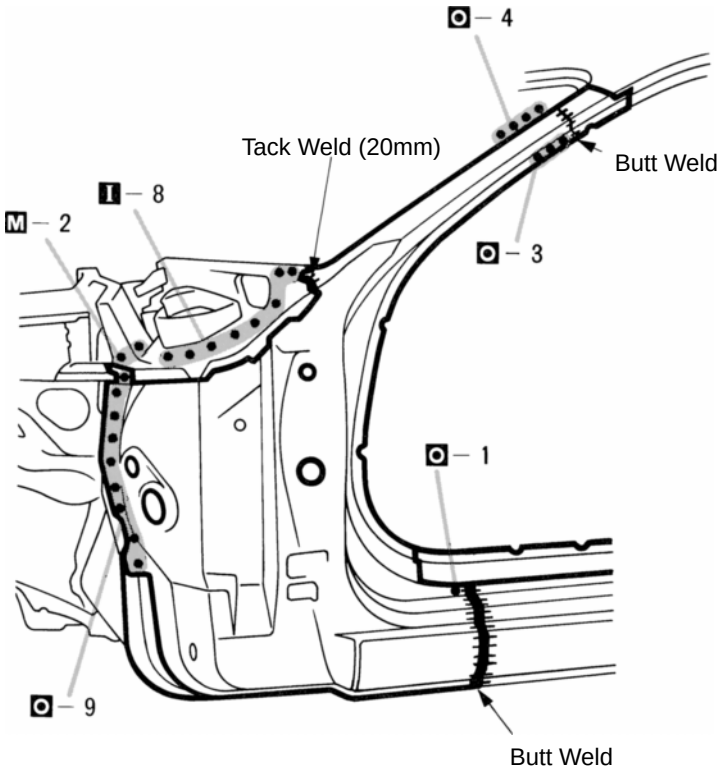

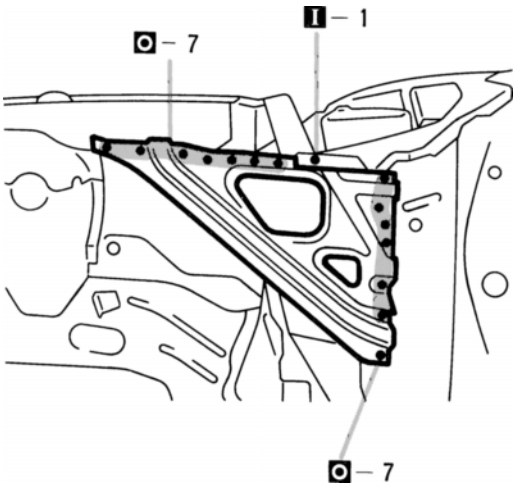

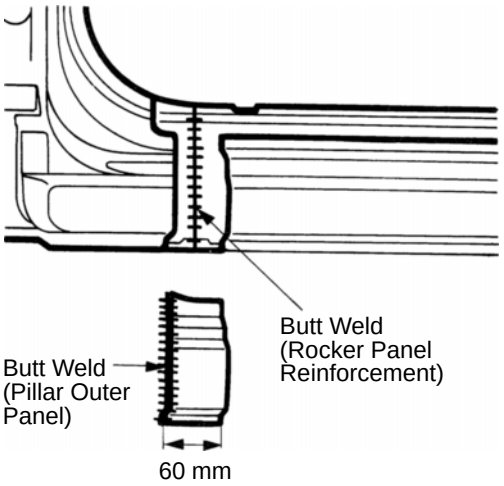

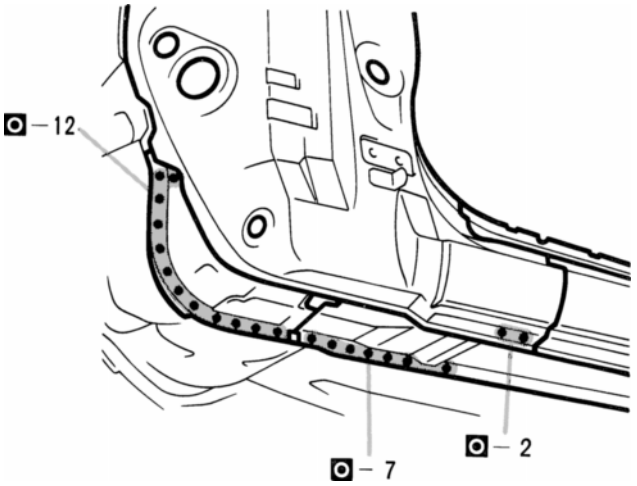

mm	in.
20	0.79
60	2.36

3. Before welding the new parts, check the fit of the front door, front fender and windshield glass.
4. A 60mm (2.36in.) wide access hole should be made in the rocker outer panel. After butt welding the rocker panel reinforcement reattach the rocker outer panel by welding.
5. After installing the new parts, apply foamed material.

HINT: For the formed material application areas, refer to page AP-4 .

FRONT CROSSMEMBER (ASSY)

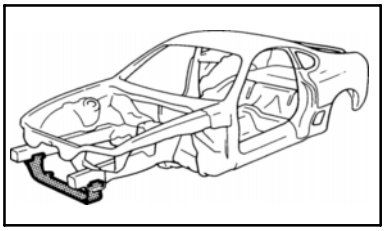

REMOVAL

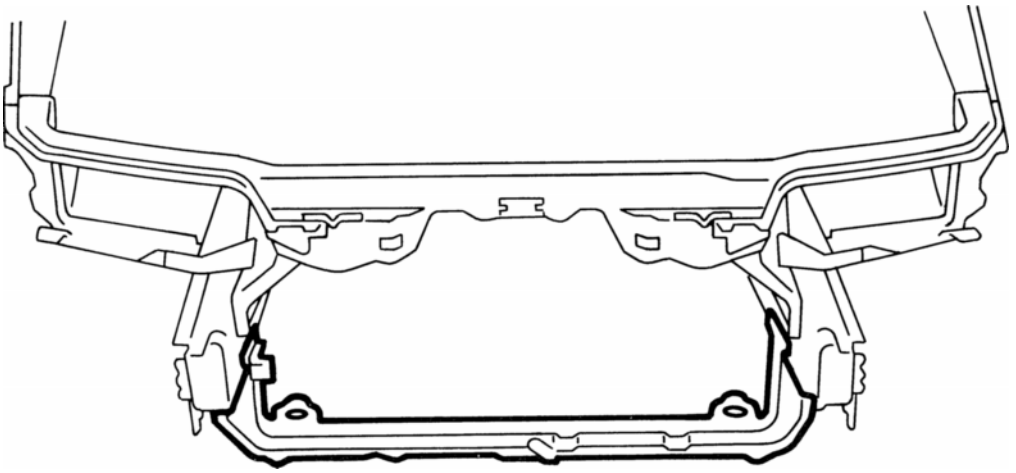

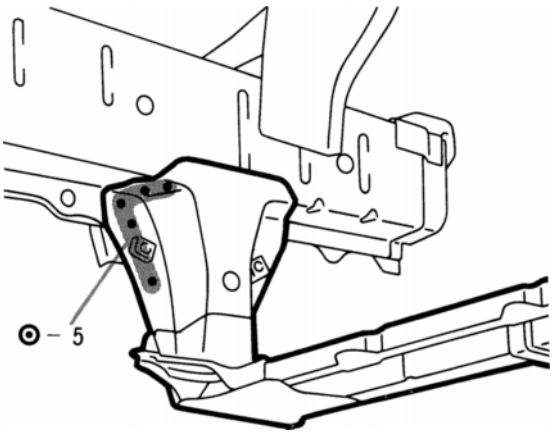

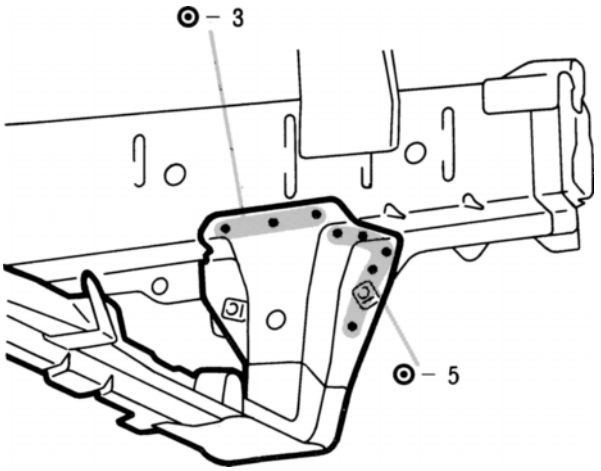

INSTALLATION

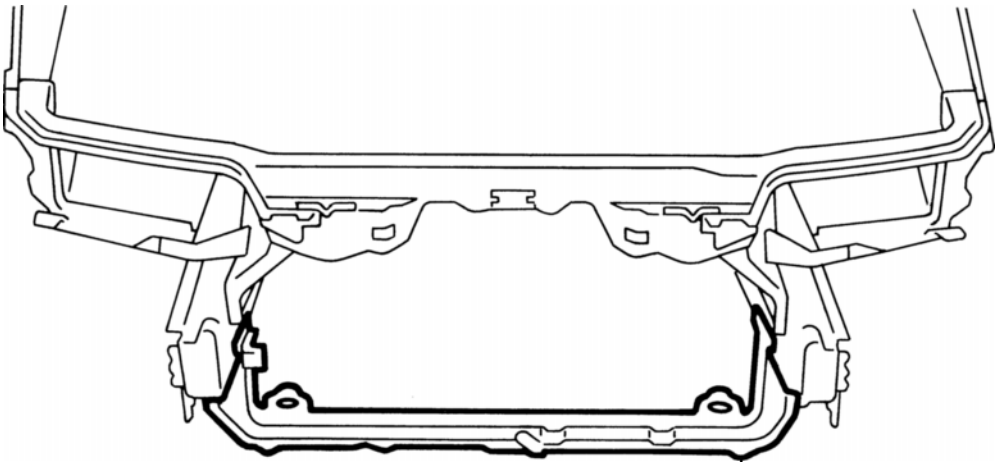

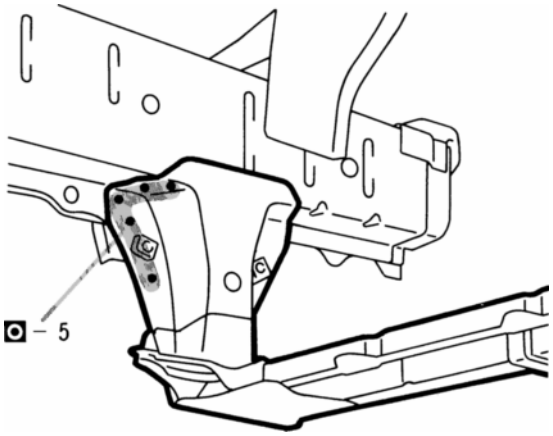

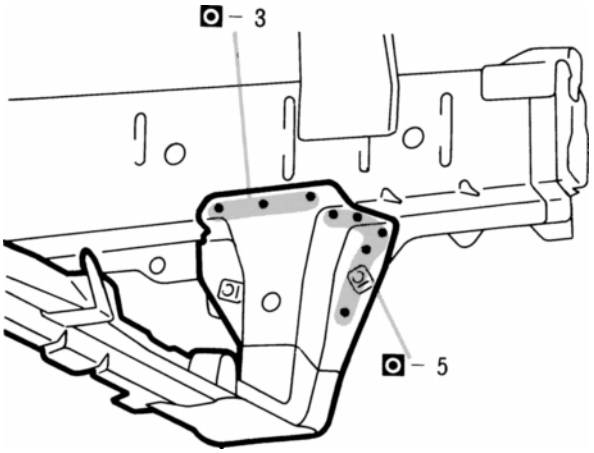

1. Temporarily install the new parts and measure each part in accordance with the body dimension diagram.

FRONT DOOR OUTER PANEL (ASSY)

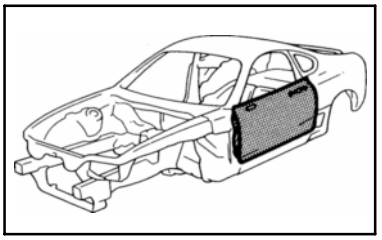

REMOVAL

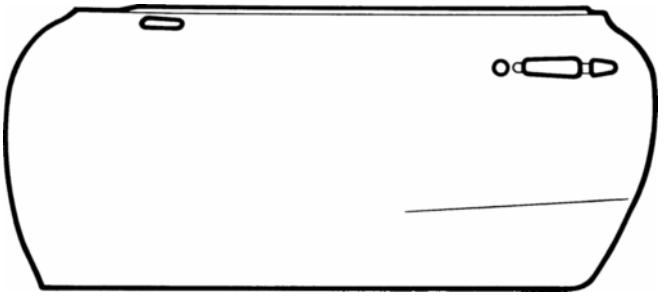

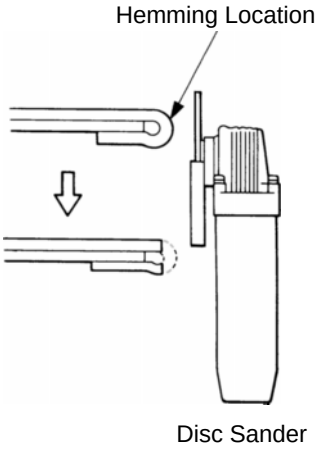

1. After grinding off the hemming location, remove the outer panel.

INSTALLATION

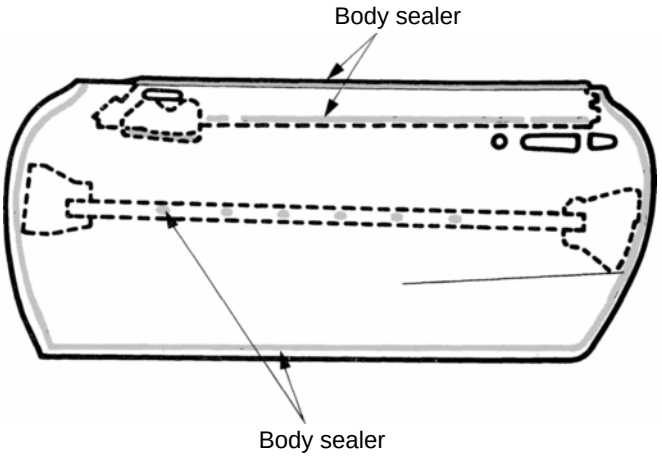

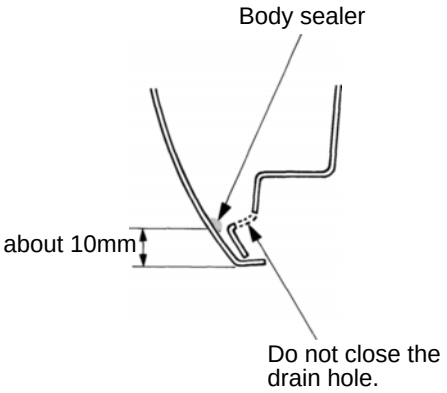

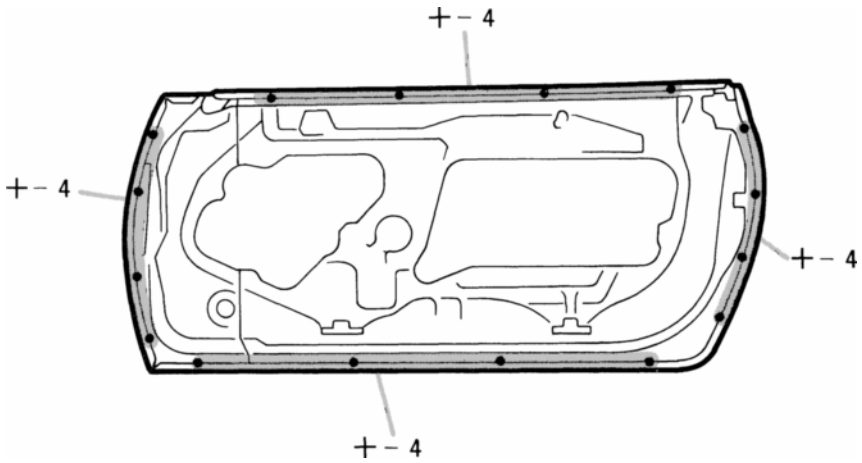

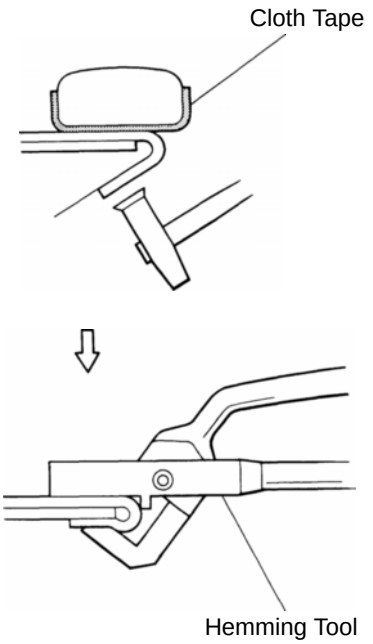

mm	in.
10	0.39

1. Before temporarily installing the new parts, apply body sealer to the reinforcement, side impact protection beam and back side of the new parts.

HINT:

1) Apply just enough sealer for the reinforcement and side impact beam to touch the new panel. Apply sealer evenly around the flange area, about 10 mm (0.39 in.) from the edge, as shown.

2) For other sealing points, refer to section AR.

2. Bend the flange hem about 30˚ with a hammer and dolly, then fasten tightly with a hemming tool.

HINT:

1) Perform hemming in three steps, being careful not to warp the panel.

2) If a hemming tool cannot be used, hem with a hammer and dolly.

FRONT FENDER FRONT APRON (ASSY)

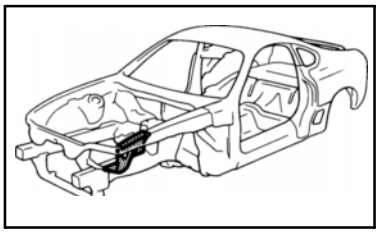

REMOVAL (With the radiator upper support removed.)

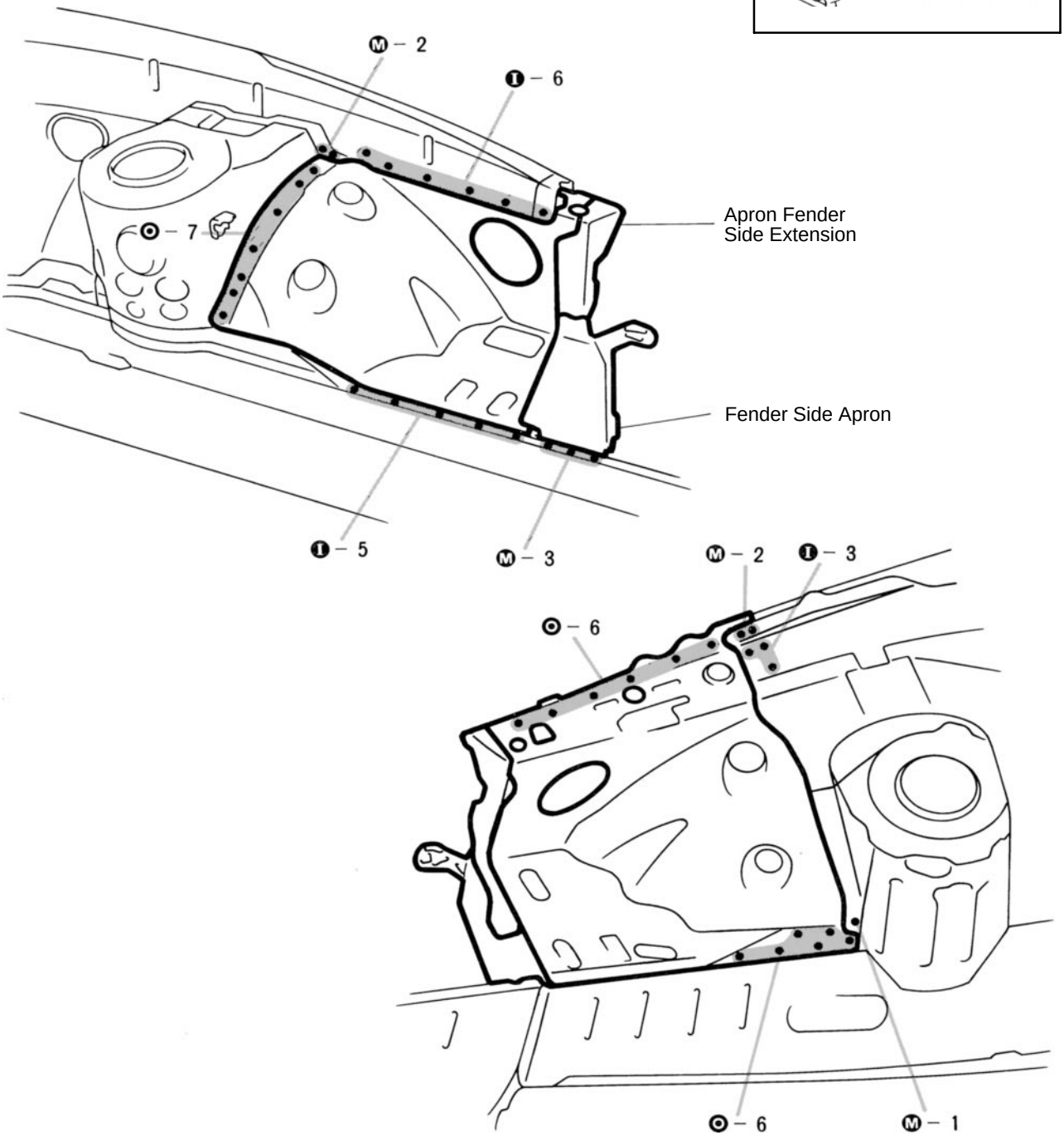

1. Replace the fender side apron and apron fender side extension at the same time.

INSTALLATION

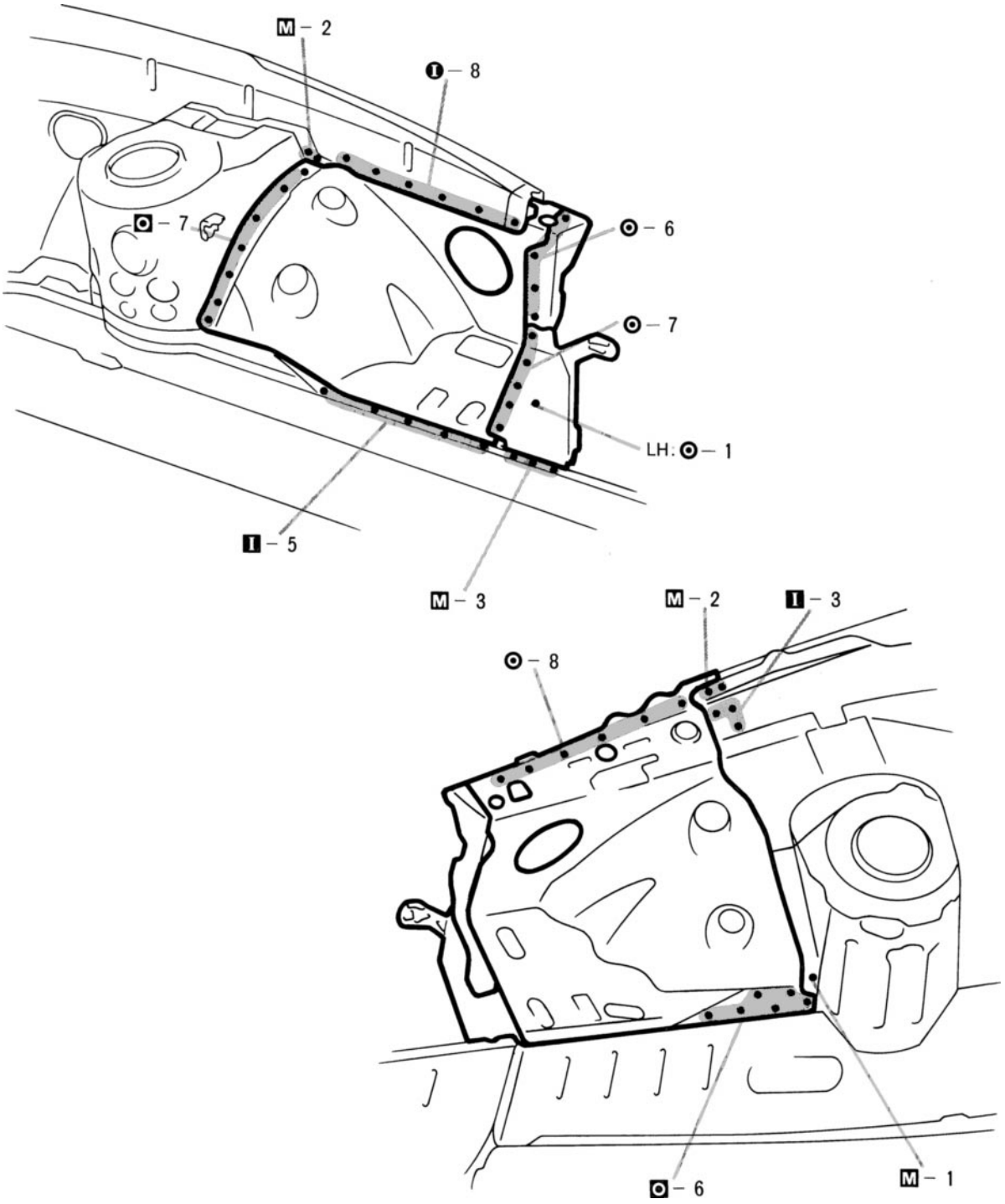

1. Temporarily install the new parts and measure each part in accordance with the body dimension diagram.

FRONT SIDE MEMBER (CUT-P)

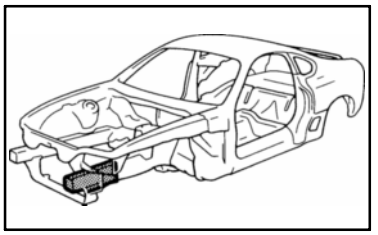

REMOVAL (With the radiator upper support and front crossmember removed.)

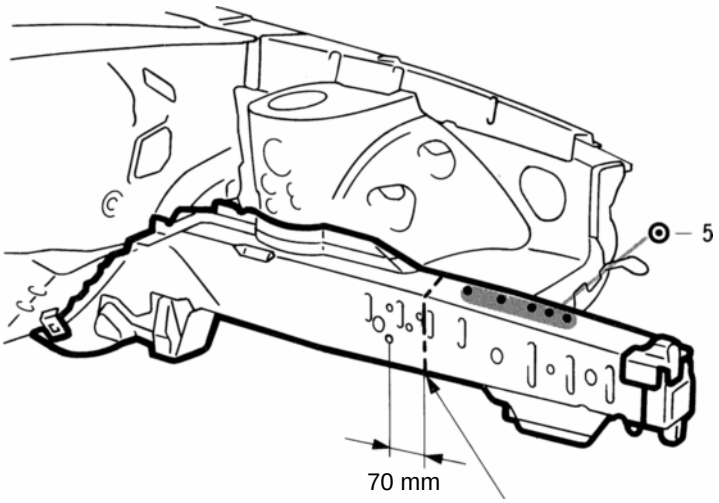

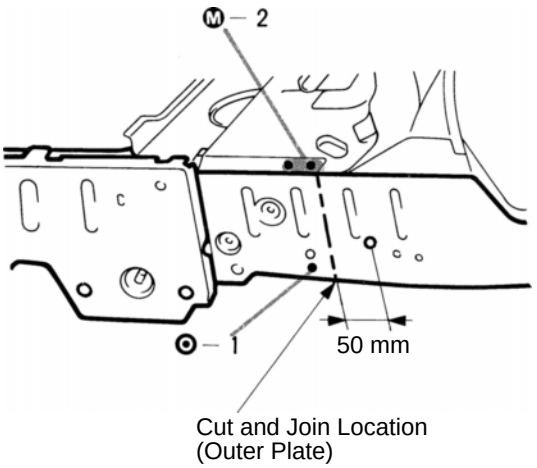

1. Cut and join the parts at the location shown above.

HINT: Shift the cut and join location of the outer plate, inner member and reinforcement.

mm	in.
50	1.97
70	2.76

INSTALLATION

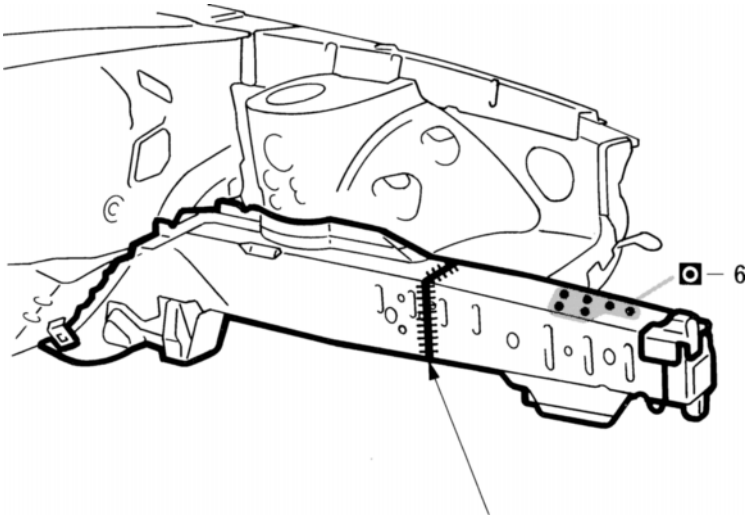

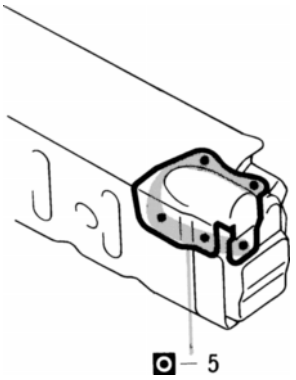

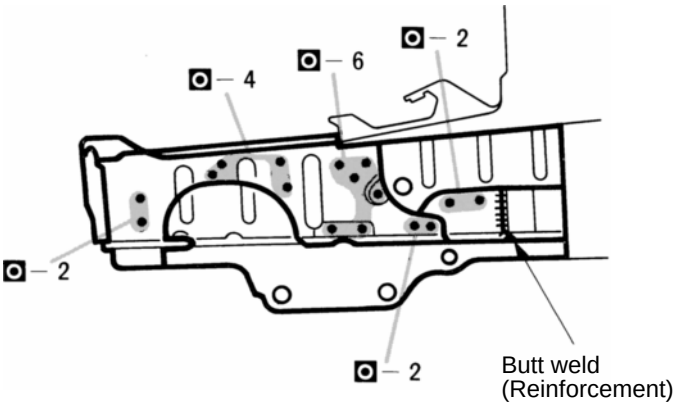

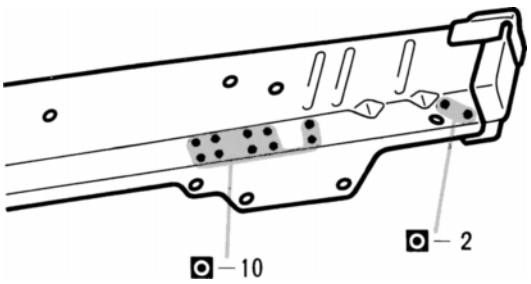

1. Temporarily install the new parts and measure each part in accordance with the body dimension diagram.
2. After butt welding the inner member and reinforcement, install the outer plate.

INSTALLATION (Cont'd)

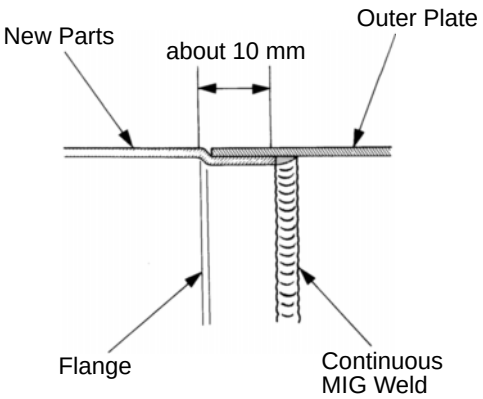

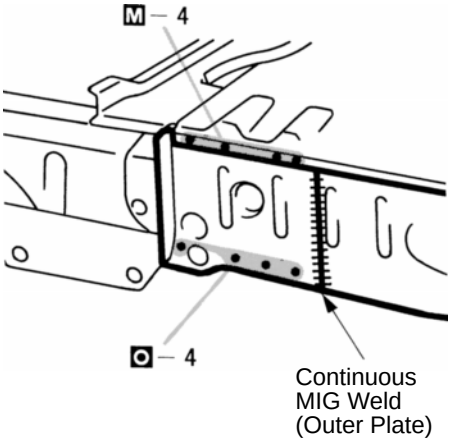

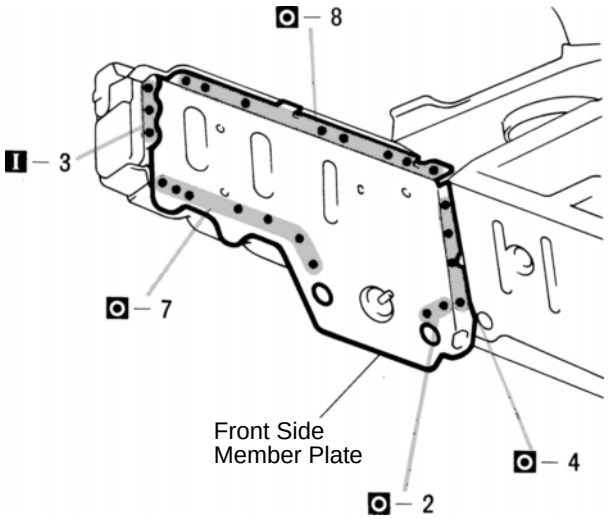

3. Provide a flange of about 10 mm (0.39 in.) on the new outer plate, then overlap it with the vehicle side panel and weld them with a continuous MIG weld to the edge.

mm	in.
10	0.39

FRONT SUSPENSION CROSSMEMBER

(Three-Dimensional Distance)

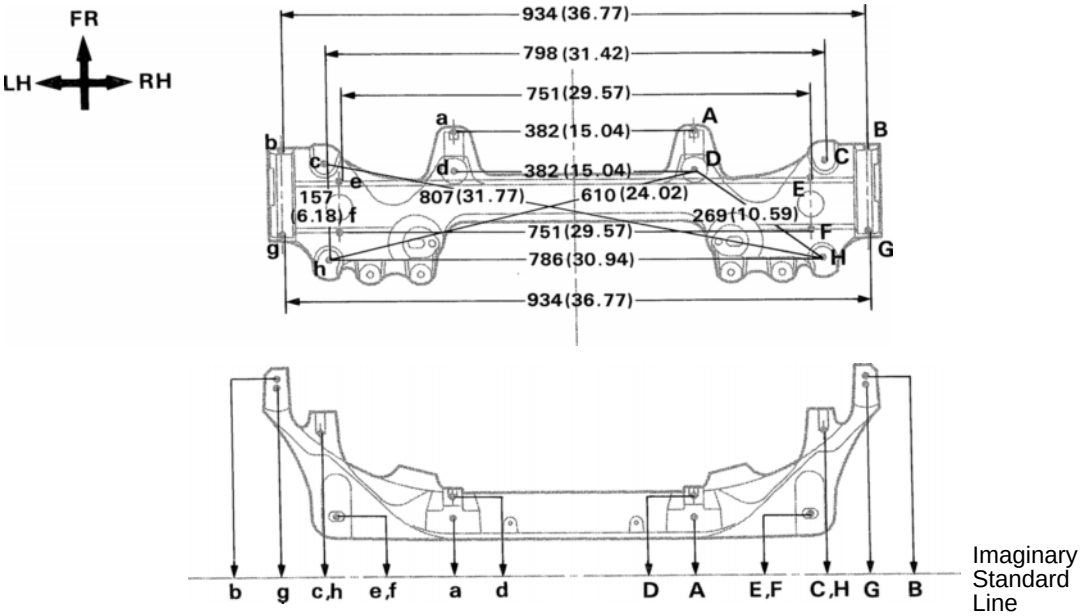

(Two-Dimensional Distance)

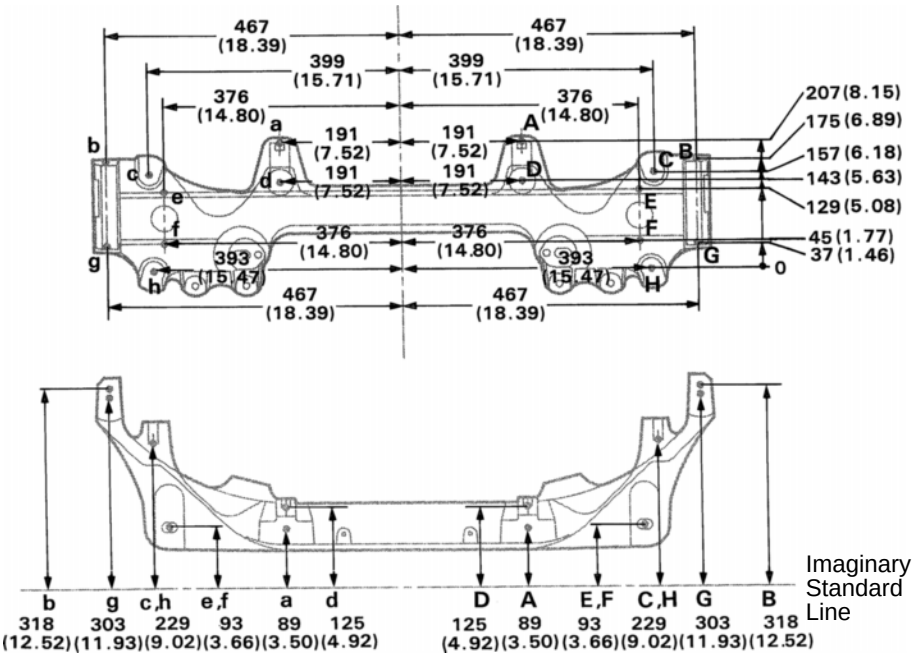

BO6850
BO6850

mm (in.)

Symbol	Name	Hole dia.	Symbol	Name	Hole dia.
A, a	Steering gear box installation hole front	12 (0.47)	E, e	Lower arm installation hole-front	25×16 (0.98×0.63)
B, b	Upper arm installation hole front	14 (0.55)	F, f	Lower arm installation hole rear	25×16 (0.98×0.63)
C, c	Suspension crossmember installation hole front-lower	15 (0.59)	G, g	Upper arm installation hole rear	14 (0.55)
D, d	Steering gear box installation hole-lower	12 (0.47)	H, h	Suspension crossmember installation hole rear-lower	RH 15×13 (0.59 x 0.51) LH 13 (0.51)

FRONT SUSPENSION CROSSMEMBER (Cont'd)

(Three-Dimensional Distance)

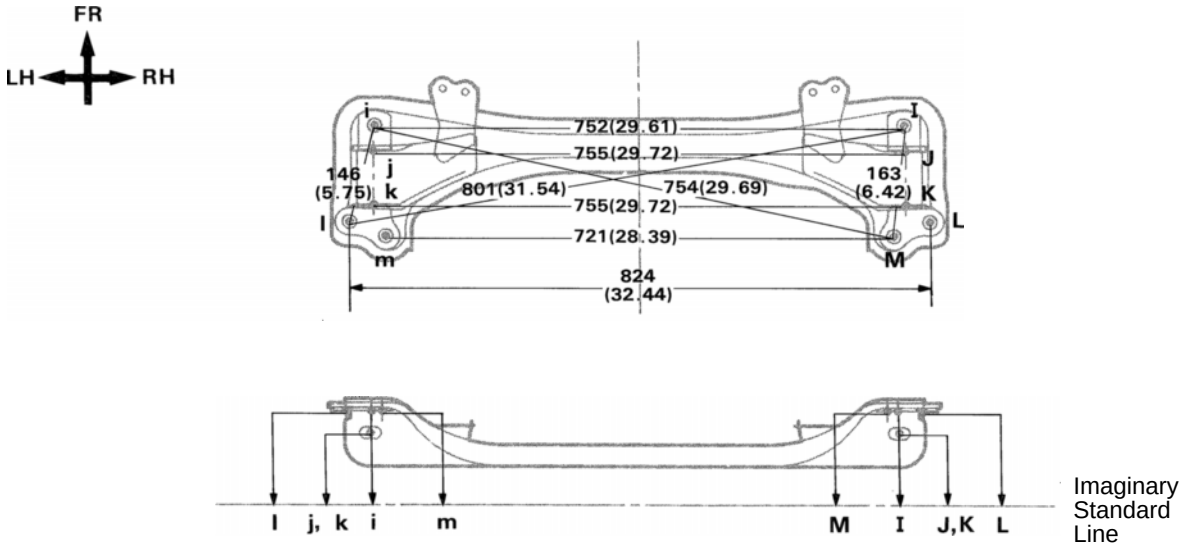

(Two-Dimensional Distance)

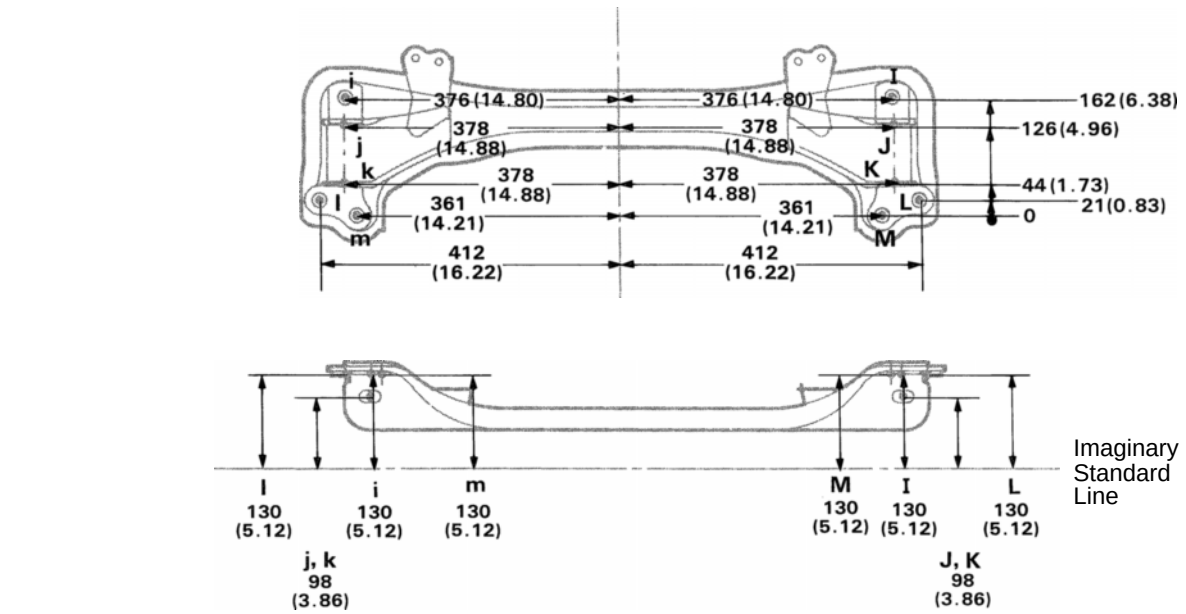

BO8851
BO6851

mm (in.)

Symbol	Name	Hole dia.	Symbol	Name	Hole dia.
I, i	Suspension crossmember installation hole front-lower	18 (0.71)	L, l	Suspension crossmember installation hole rear-lower	18 (0.71)
J, j	Lower arm installation hole-front	30×16 (1.18×0.63)	M, m	Suspension crossmember installation hole rear-lower	18 (0.71)
K, k	Lower arm installation hole rear	30×16 (1.18 x 0.63)	—	—	—

GENERAL INFORMATION

Anti-rust treatment is necessary before welding and before and after the painting process.

ANTI-RUST TREATMENT BEFORE WELDING

1. WELD-THROUGH PRIMER (SPOT SEALER) APPLICATION

For anti-corrosion measures, always apply the weld-through primer (spot sealer) to welding surfaces where the paint film has been removed.
HINT: Apply the weld-through primer (spot sealer) to that it does not ooze out from the joining surfaces.

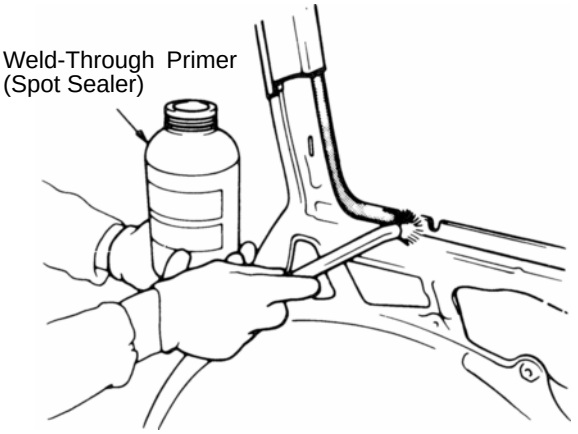

WELD-THROUGH PRIMER (SPOT SEALER) APPLICATION

ANTI-RUST TREATMENT BEFORE PAINTING PROCESS

1. BODY SEALER APPLICATION

For water-proofing and anti-corrosion measures, always apply the body sealer to the body panel seams and hems of the doors, etc.

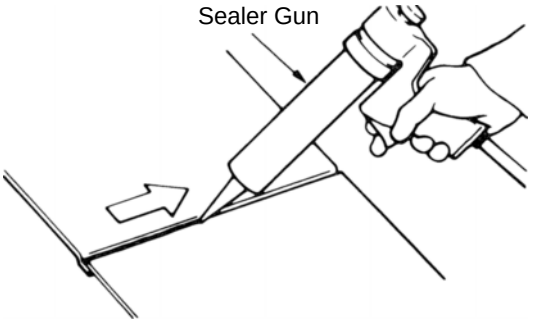

BODY SEALER APPLICATION

2. UNDERCOAT APPLICATION

To prevent corrosion and protect the body from damage by flying stones, always apply sufficient undercoat to the bottom surface of the under body and inside of the wheel housings.

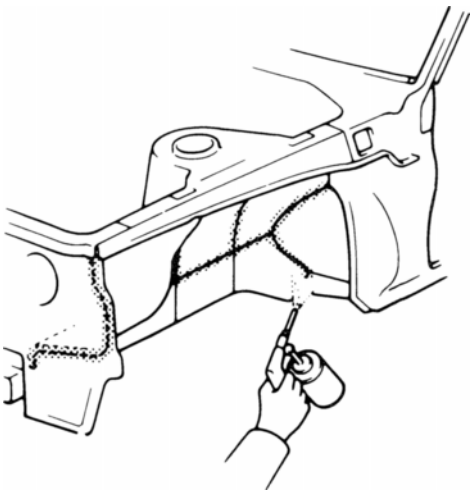

UNDERCOAT APPLICATION

ANTI-RUST TREATMENT AFTER PAINTING PROCESS

1. ANTI-RUST AGENT (WAX) APPLICATION

To preserve impossible to paint areas from corrosion, always apply sufficient anti-rust agent (wax) to the inside of the hemming areas of the doors and hoods, and around the hinges, or the welded surfaces inside the boxed cross-section structure of the side member, body pillar, etc.

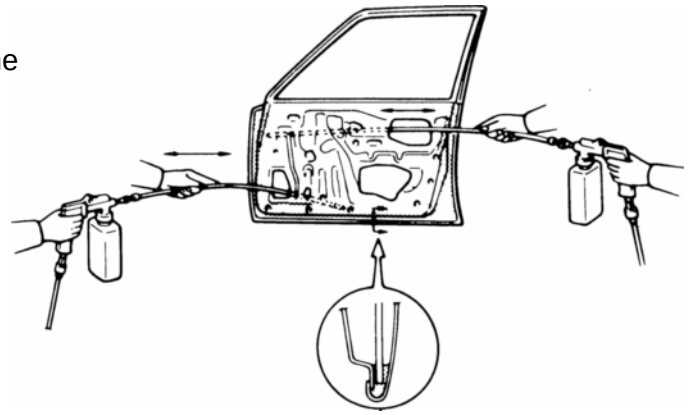

ANTI-RUST AGENT (WAX) APPLICATION

REFERENCE: ANTI-RUST TREATMENT BY PAINTING

Painting prevents corrosion and protects the sheet metal from damage. In this section, anti-chipping paint only for anti-corrosion purpose is described.

1. ANTI-CHIPPING PAINT

To prevent corrosion and protect the body from damage by flying stones, etc., apply anti-chipping paint to the rocker panel, wheel arch areas, valance panel, etc.

HINT:

Depending on the model or the application area, there are cases where the application of anti-chipping paint is necessary before the second coat or after the top coat.

- Apply the anti-chipping paint after the top coat.

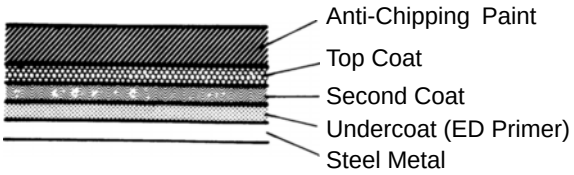

- Apply the anti-chipping paint before the second coat.

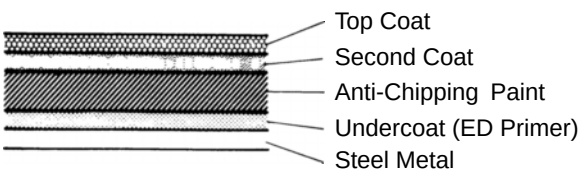

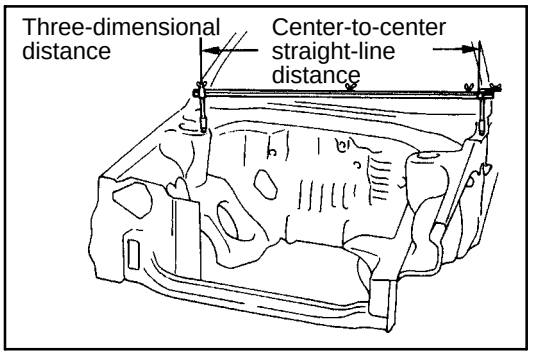

GENERAL INFORMATION

1. BASIC DIMENSIONS

(a) There are two types of dimensions in the diagram. (Three-dimensional distance)

- Straight-line distance between the centers of two measuring points.

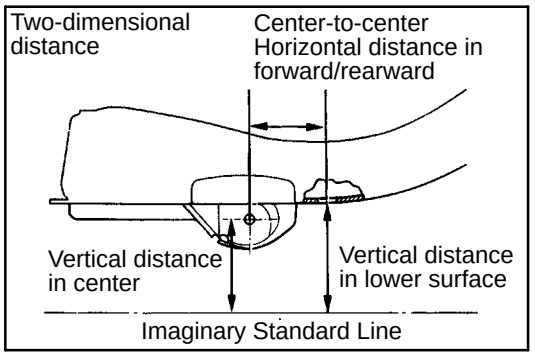

(Two-dimensional distance)

- Horizontal distance in forward/rearward between the centers of two measuring points.
- The height from an imaginary standard line.

(b) In cases in which only one dimension is given, left and right are symmetrical.

(c) The dimensions in the following drawing indicate actual distance. Therefore, please use the dimensions as a reference.

2. MEASURING

(a) Basically, all measurements are to be done with a tracking gauge. For portions where it is not possible to use a tracking gauge, a tape measure should be used.

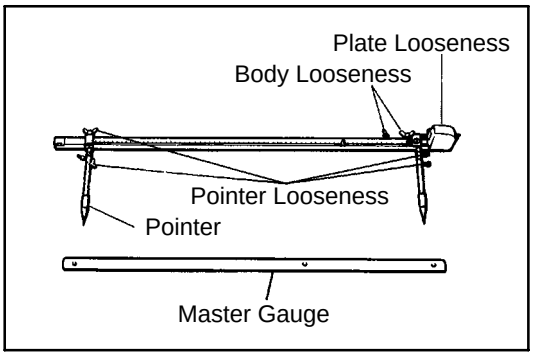

(b) Use only a tracking gauge that has no looseness in the body, measuring plate, or pointers.

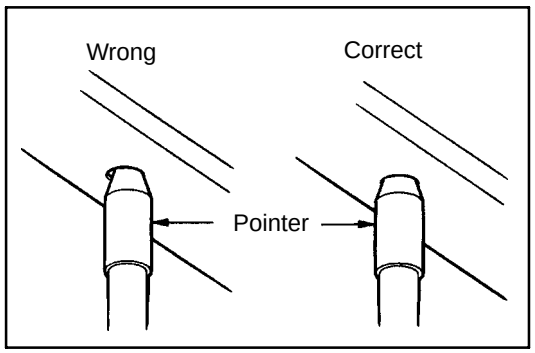

HINT:

1. *The height of the left and right pointers must be equal.*
2. *Always calibrate the tracking gauge before measuring or after adjusting the pointer height.*
3. *Take care not to drop the tracking gauge or otherwise shock it.*
4. *Confirm that the pointers are securely in the holes.*

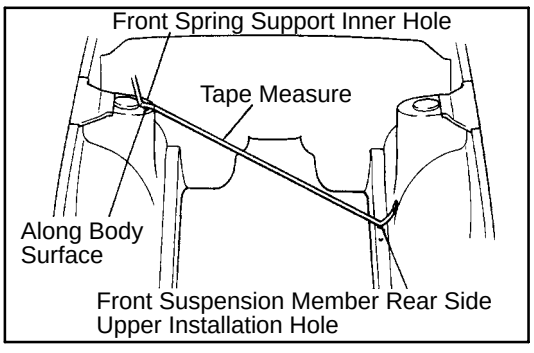

(c) When using a tape measure, avoid twists and bends in the tape.

(d) When tracking a diagonal measurement from the front spring support inner hole to the suspension member upper rear installation hole, measure along the front spring support panel surface.

HANDLING PRECAUTIONS

1. The repair procedure for plastic body parts must conform with the type of plastic material.
2. Plastic body parts are identified by the codes in the following chart.
3. When repairing metal body parts adjoining plastic body parts (by brazing, frame cutting, welding, painting etc.), consideration must given to the property of the plastic.

Code	Material name	Heat* resistant temperature limit °C (°F)	Resistance to alcohol or gasoline	Notes
AAS	Acrylonitrile Acrylic Styrene	80 (176)	Alcohol is harmless if applied only for short time in small amounts (e.g., quick wiping to remove grease).	Avoid gasoline and organic or aromatic solvents.
ABS	Acrylonitrile Butadiene Styrene	80 (176)	Alcohol is harmless if applied only for short time in small amounts (e.g., quick wiping to remove grease).	Avoid gasoline and organic or aromatic solvents.
AES	Acrylonitrile Ethylene Styrene	80 (176)	Alcohol is harmless if applied only for short time in small amounts (e.g., quick wiping to remove grease).	Avoid gasoline and organic or aromatic solvents.
BMC	Bulk Moulding Compound	150 (302)	Alcohol and gasoline are harmless.	Most solvents are harmless.
CAB	Cellulose Acetate	80 (176)	Alcohol is harmless if applied only for short time in small amounts (e.g., quick wiping to remove grease).	Avoid gasoline and organic or aromatic solvents.
EPDM	Ethylene Propylene	100 (212)	Alcohol is harmless. Gasoline is harmless if applied only for short time in small amounts.	Most solvents are harmless but avoid dipping in gasoline, solvents, etc.
PA	Polyamide (Nylon)	80 (176)	Alcohol and gasoline are harmless.	Avoid battery acid.
PBT	Polybutylene Terephthalate	160 (320)	Alcohol and gasoline are harmless.	Most solvents are harmless.
PC	Polycarbonate	120 (248)	Alcohol is harmless.	Avoid gasoline, brake fluid, wax, wax removers and organic solvents. Avoid alkali.
PE	Polyethylene	80 (176)	Alcohol and gasoline are harmless.	Most solvents are harmless.
PET	Polyethylene Terephthalate	75 (176)	Alcohol and gasoline are harmless.	Avoid dipping in water.

* Temperatures higher than those listed here may result in material deformation during repair.

Code	Material name	Heat* resistant temperature limit °C (°F)	Resistance to alcohol or gasoline	Notes
PMMA	Polymethyl Methacrylate	80 (176)	Alcohol is harmless if applied only for short time in small amounts.	Avoid dipping or immersing in alcohol, gasoline, solvents, etc.
POM	Polyoxymethylene (Polyacetal)	100 (212)	Alcohol and gasoline are harmless.	Most solvents are harmless.
PP	Polypropylene	80 (176)	Alcohol and gasoline are harmless.	Most solvents are harmless.
PPO	Modified Polyphenylene Oxide	100 (212)	Alcohol is harmless.	Gasoline is harmless if applied only for quick wiping to remove grease.
PS	Polystyrene	60 (140)	Alcohol and gasoline are harmless if applied only for short time in small amounts.	Avoid dipping or immersing in alcohol, gasoline, solvents, etc.
PUR	Polyurethane	80 (176)	Alcohol is harmless if applied only for very short time in small amounts (e.g., quick wiping to remove grease).	Avoid dipping or immersing in alcohol, gasoline, solvents, etc.
PVC	Polyvinylchloride (Vinyl)	80 (176)	Alcohol and gasoline are harmless if applied only for short time in small amounts (e.g., quick wiping to remove grease).	Avoid dipping or immersing in alcohol, gasoline, solvents, etc.
SAN	Styrene Acrylonitrile	80 (176)	Alcohol is harmless if applied only for short time in small amounts (e.g., quick wiping to remove grease).	Avoid dipping or immersing in alcohol, gasoline, solvents, etc.
SMC	Sheet Moulding Compound	180 (356)	Alcohol and gasoline are harmless.	Avoid alkali.
TPO	Thermoplastic Olefine	80 (176)	Alcohol is harmless. Gasoline is harmless if applied only for short tune in small amounts.	Most solvents are harmless but avoid dipping in gasoline, solvents, etc.
TPU	Thermoplastic Polyurethane	80 (176)	Alcohol is harmless if applied only for very short time in small amounts (e.g., quick wiping to remove grease).	Avoid dipping or immersing in alcohol, gasoline, solvents, etc.
TSOP	TOYOTA Supper Olefine Polymer	80 (176)	Alcohol and gasoline are harmless.	Most solvents are harmless.
UP	Unsaturated Polyester	110 (233)	Alcohol and gasoline are harmless.	Avoid alkali.

* Temperatures higher than those listed here may result in material deformation during repair.

HIGH-STRENGTH STEEL (HSS) PARTS

Generally, High-Strength Steel (HSS) is that which has an intensity value of at 35 kgf/mm^2 (343 MPa), and distinguished from mild steel.

The handling of HSS is the same as for mild steel, but the following should be observed.

1. Panel Hammering: Because HSS is thinner than mild steel, care should be taken to avoid warping during hammering operations.
2. Removing Spot Welds: Because HSS is tougher than mild steel, damage will occur more easily to a regular drill. Therefore, an HSS Spot Cutter is recommended.
   Also, use a high-torque drill at low speed, and supply grinding oil to the drill during use.
3. Panel Welding: Panel welding procedures for HSS are exactly the same as for mild steel. Plug welding should be done with MIG (Metal Inert Gas) welder. Do not gas weld or braze panels at areas other than specified.

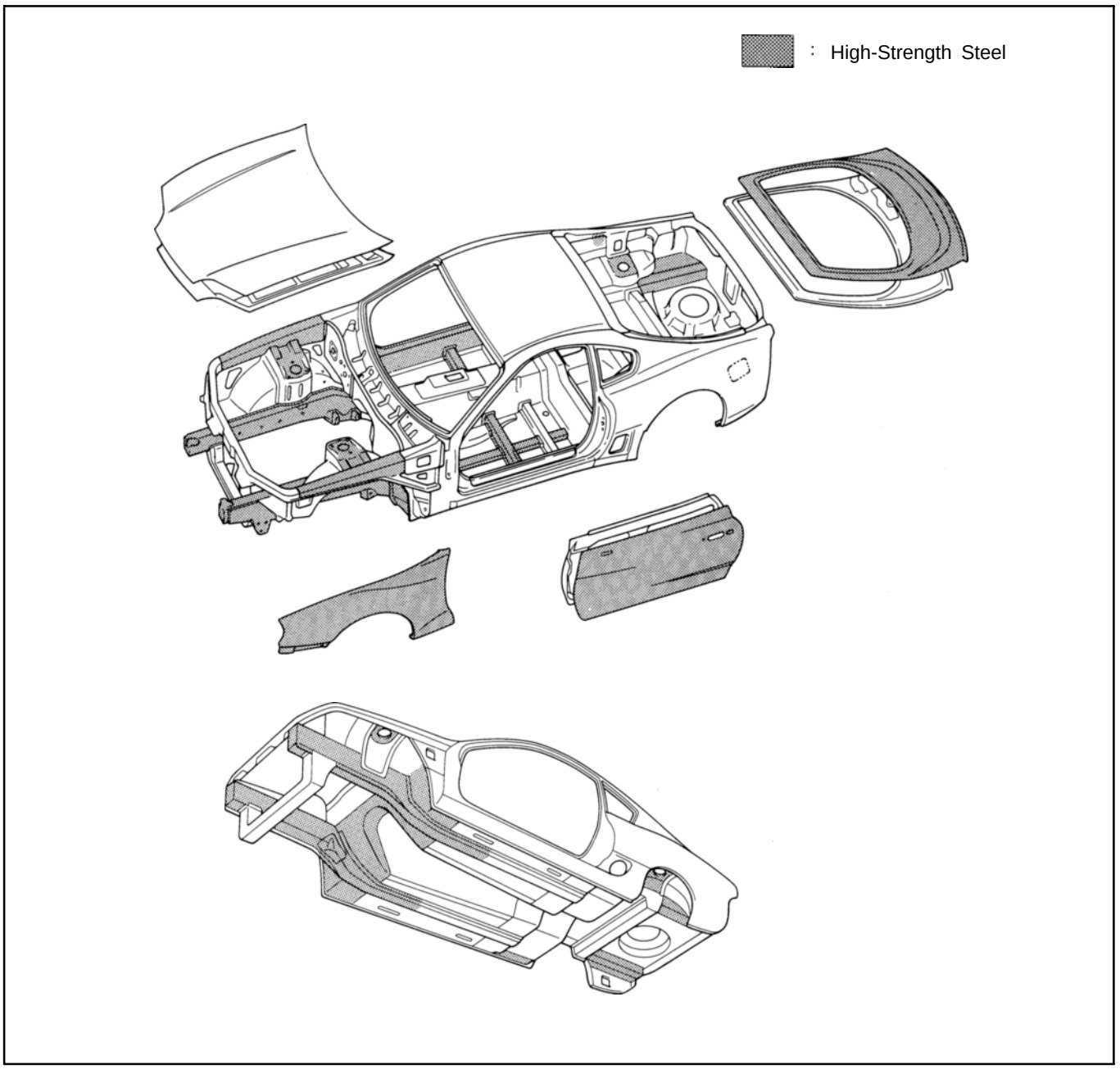

LOCATION OF PLASTIC BODY PARTS

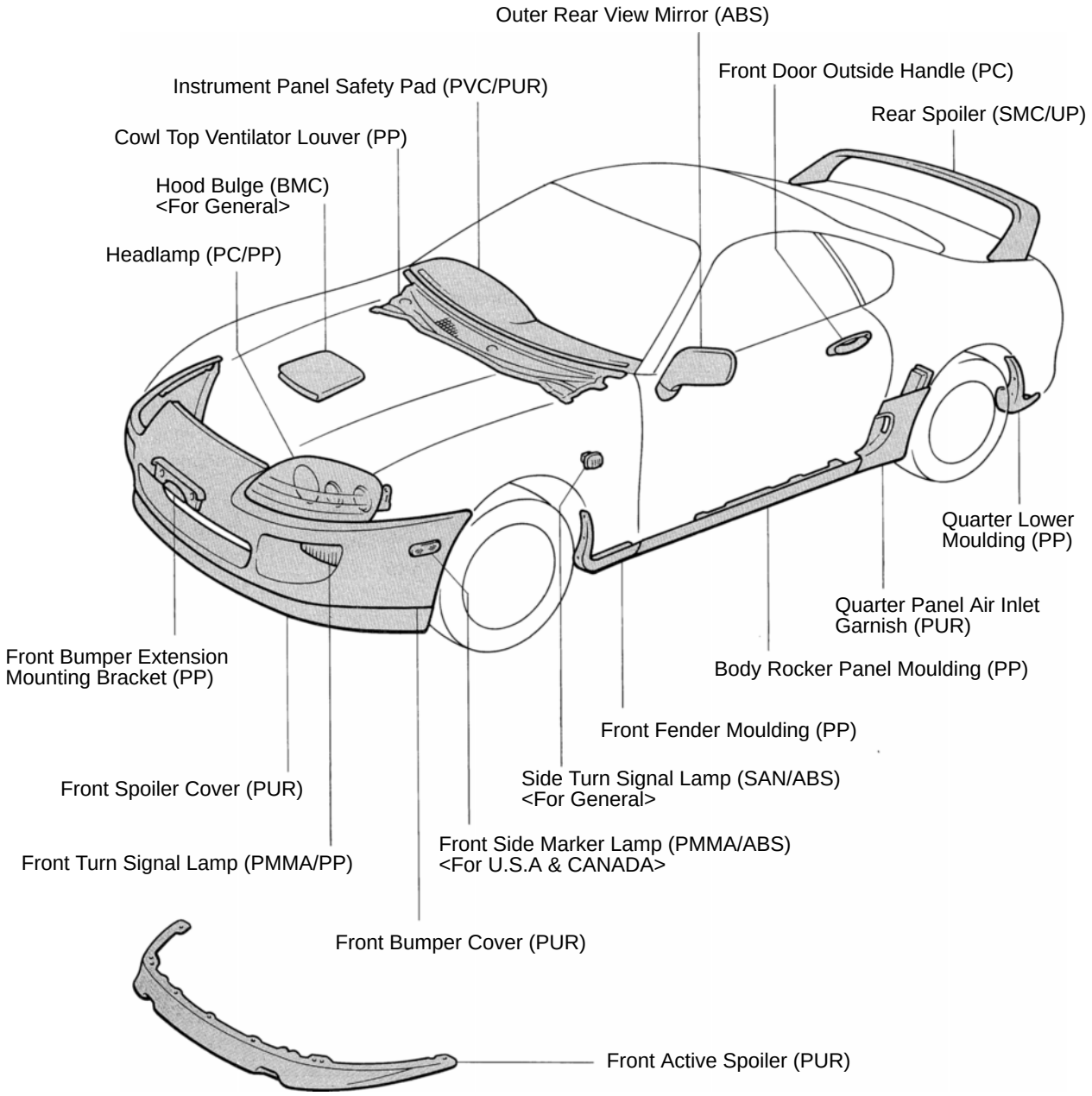

HINT:

- *Resin material differs with model.*

/ *Made up of 2 or more kinds of materials.*

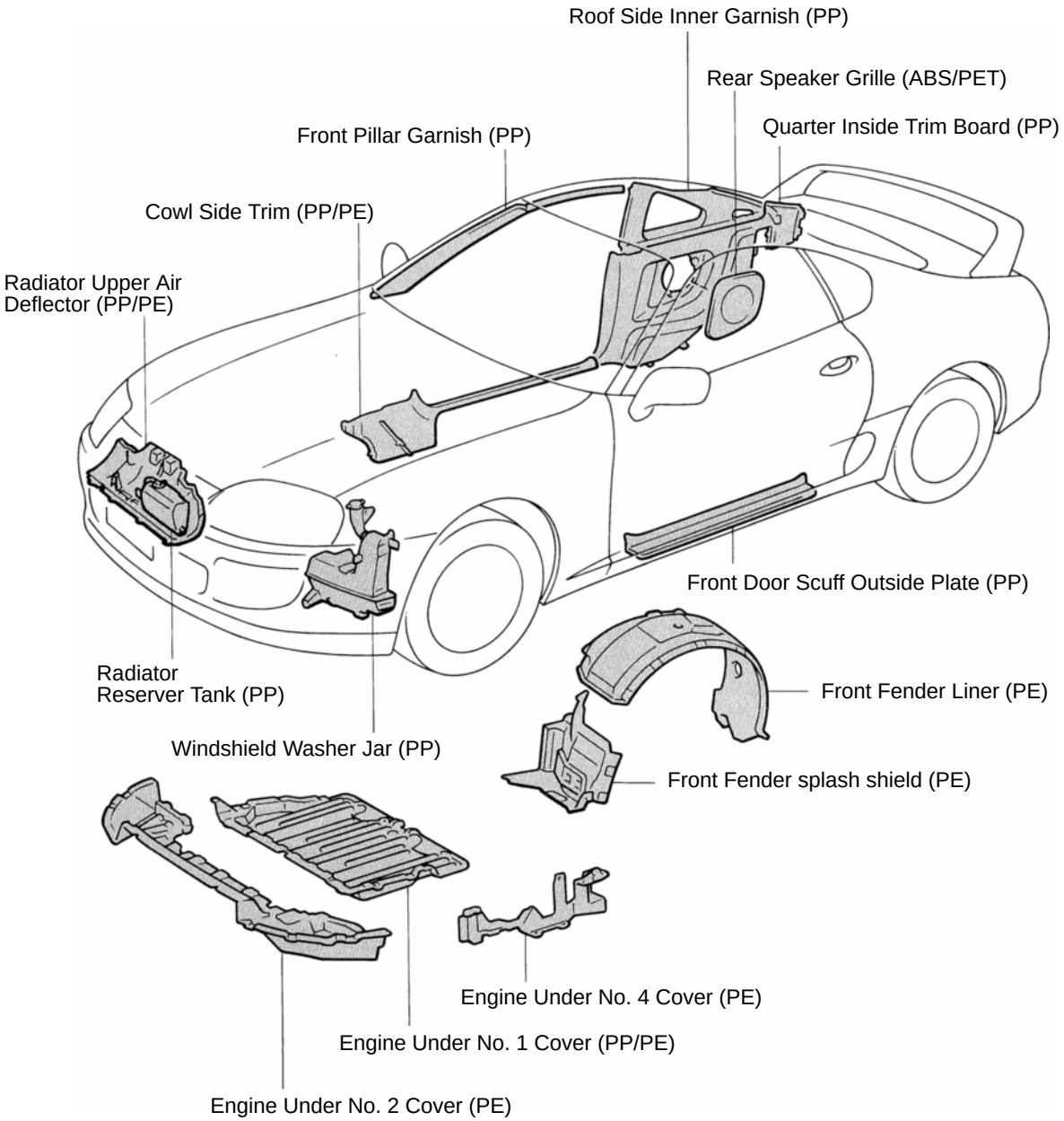

HINT:

- *Resin material differs with model.*

/ *Made up of 2 or more kinds of materials.*

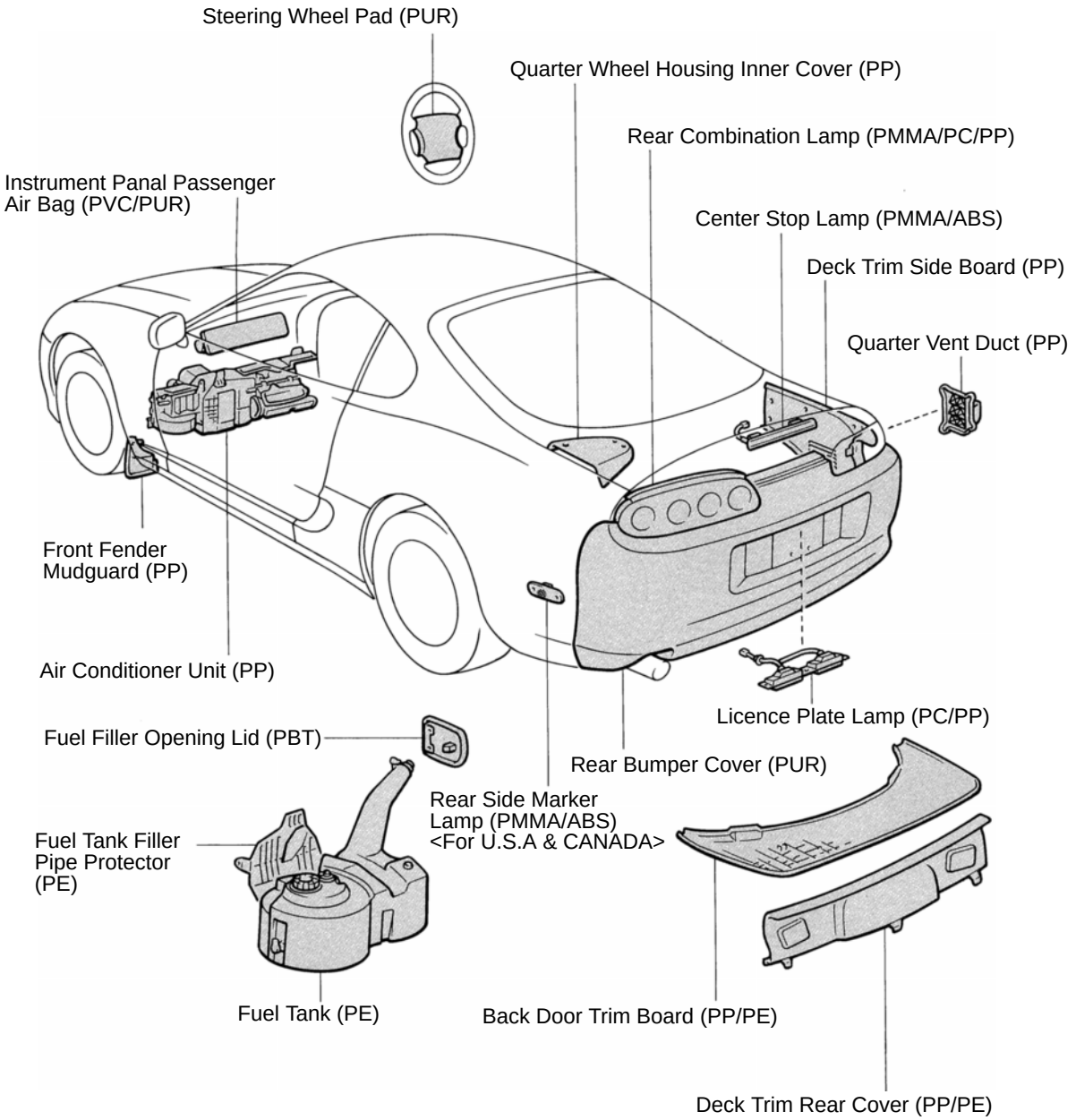

HINT:

- *Resin material differs with model.*

/ Made up of 2 or more kinds of materials.

QUARTER PANEL (CUT-P)

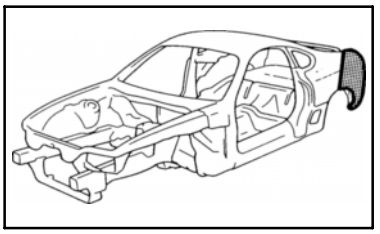

REMOVAL

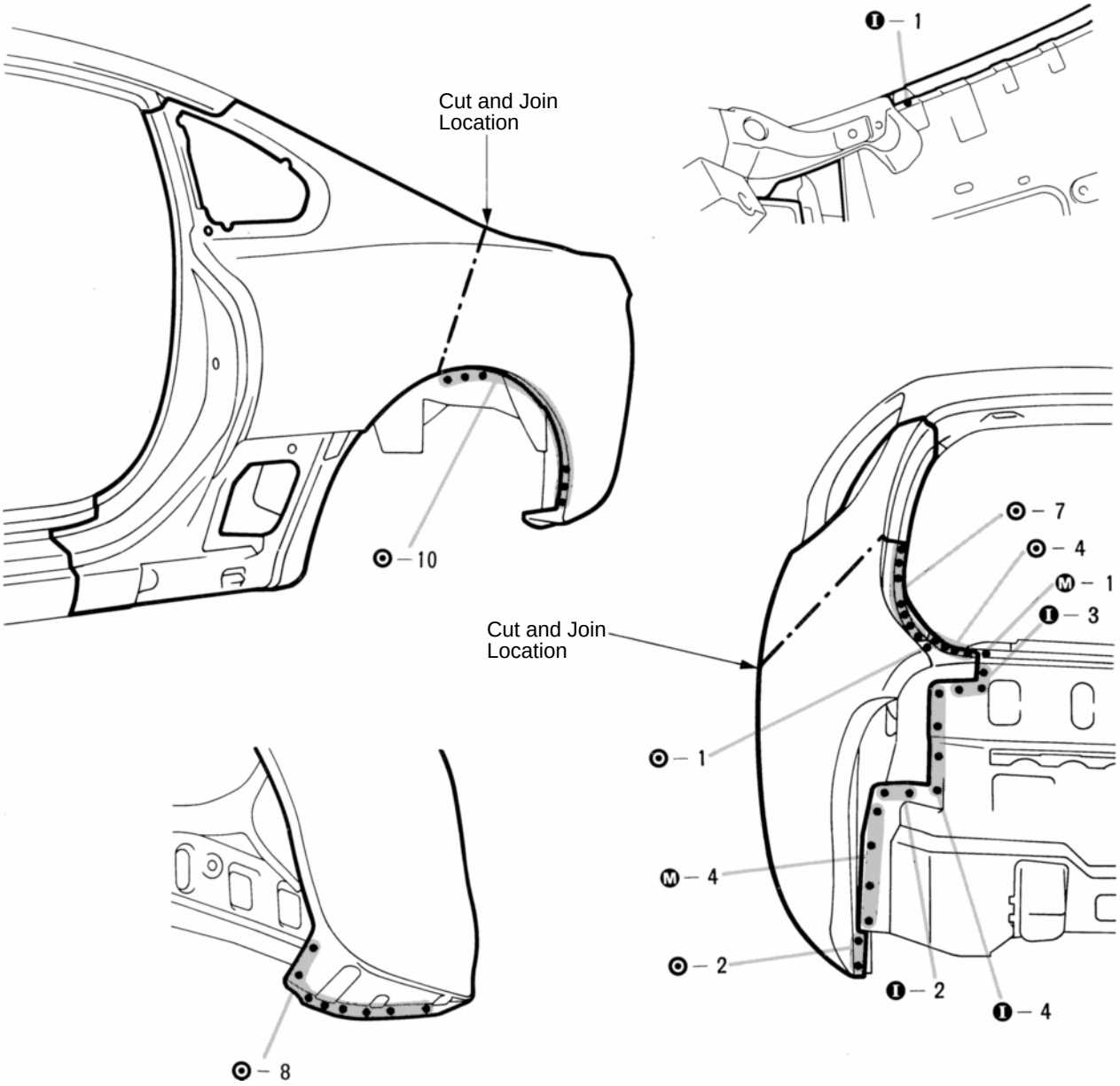

1. Cut and join the parts at the location shown above.

INSTALLATION

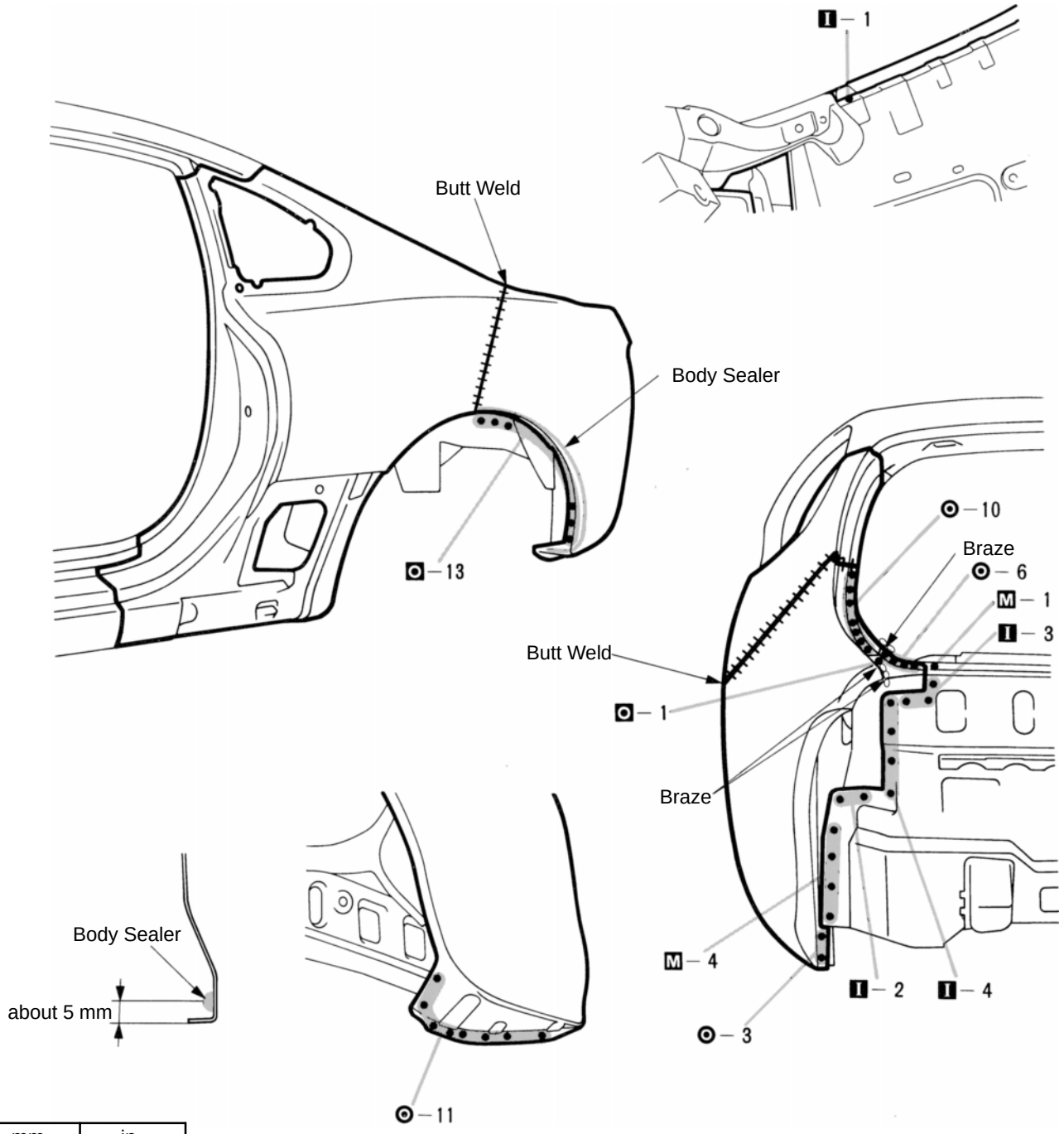

mm	in.
5	0.20

1. Before temporarily installing the new parts, apply body sealer to the wheel arch.

HINT:

1) Apply body sealer about 5 mm (0.20 in.) from the flange, avoiding any oozing.
2) Apply sealer evenly, about 3 - 4 mm (0.12 - 0.16 in.) diameter.
3) For other sealing points, refer to section AR.

2. Temporarily install the new parts and check the fit of the back door and rear combination lamp.
3. Before welding, cut the lining away from the weld seams a little.

QUARTER WHEEL HOUSING OUTER PANEL (ASSY): Normal Roof Left Side

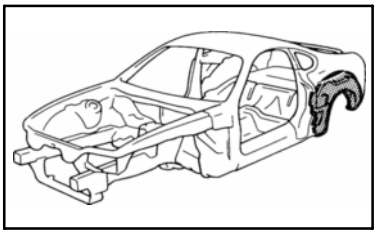

REMOVAL (With the quarter panel removed.)

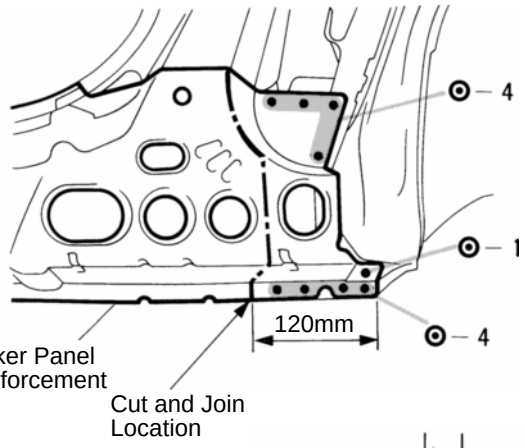

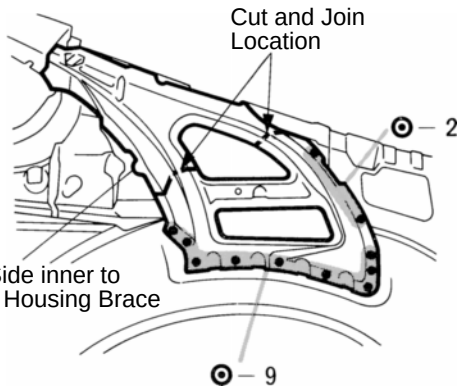

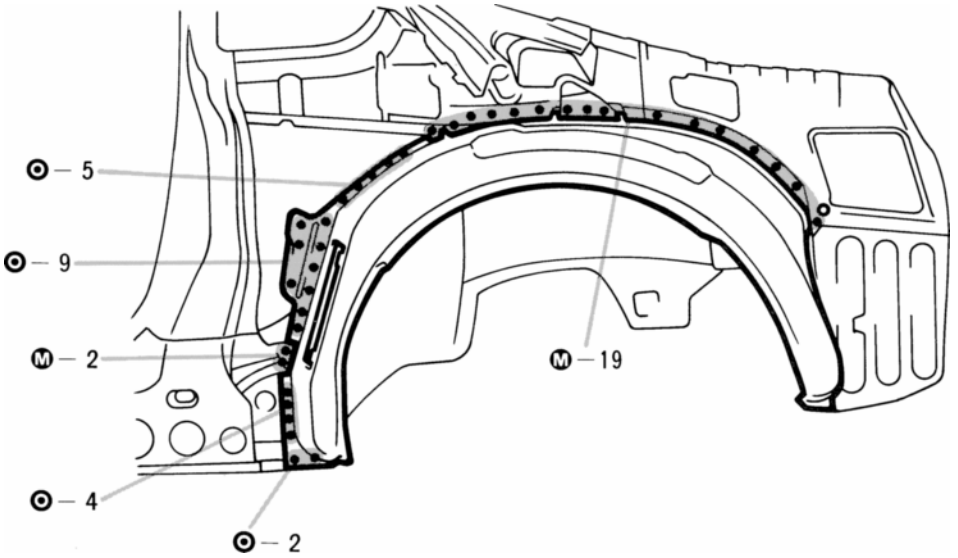

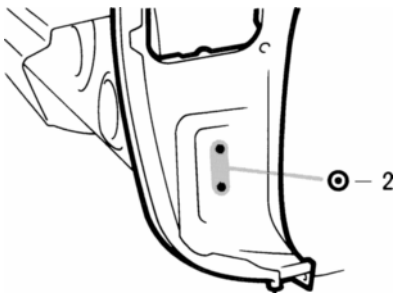

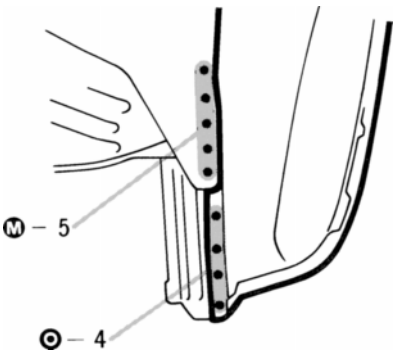

1. Cut the roof side inner to wheel housing brace and the rocker panel reinforcement end at locations shown above. Remove the quarter wheel housing outer panel.

mm	in.
120	4.72

INSTALLATION

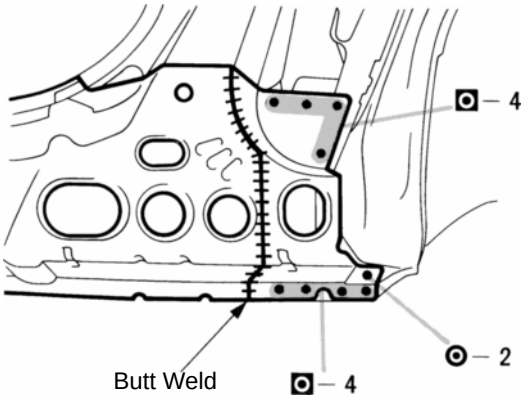

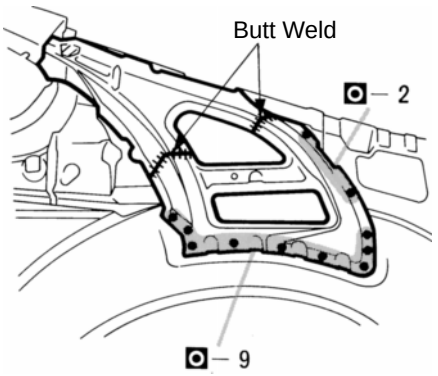

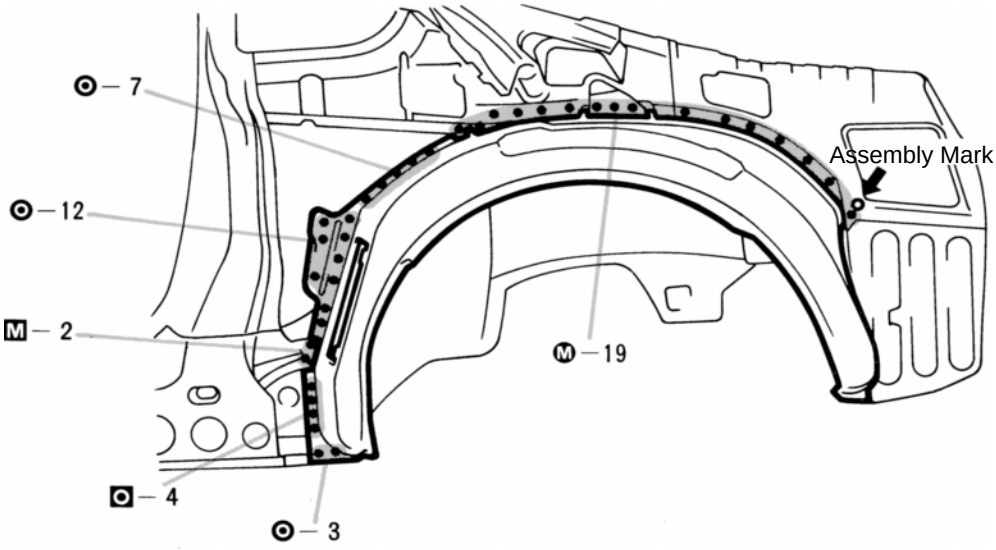

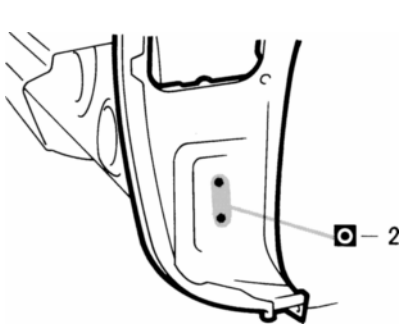

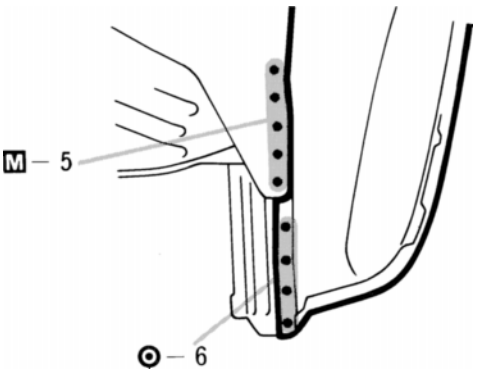

1. Determine the position of the new parts by the assembly marks of the inner and outer panels.

QUARTER WHEEL HOUSING OUTER PANEL (ASSY): Sport Roof Right Side

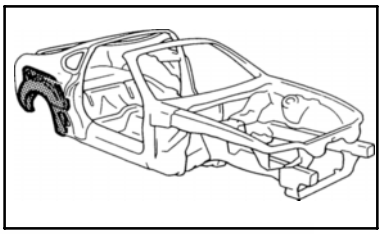

REMOVAL (With the quarter panel removed.)

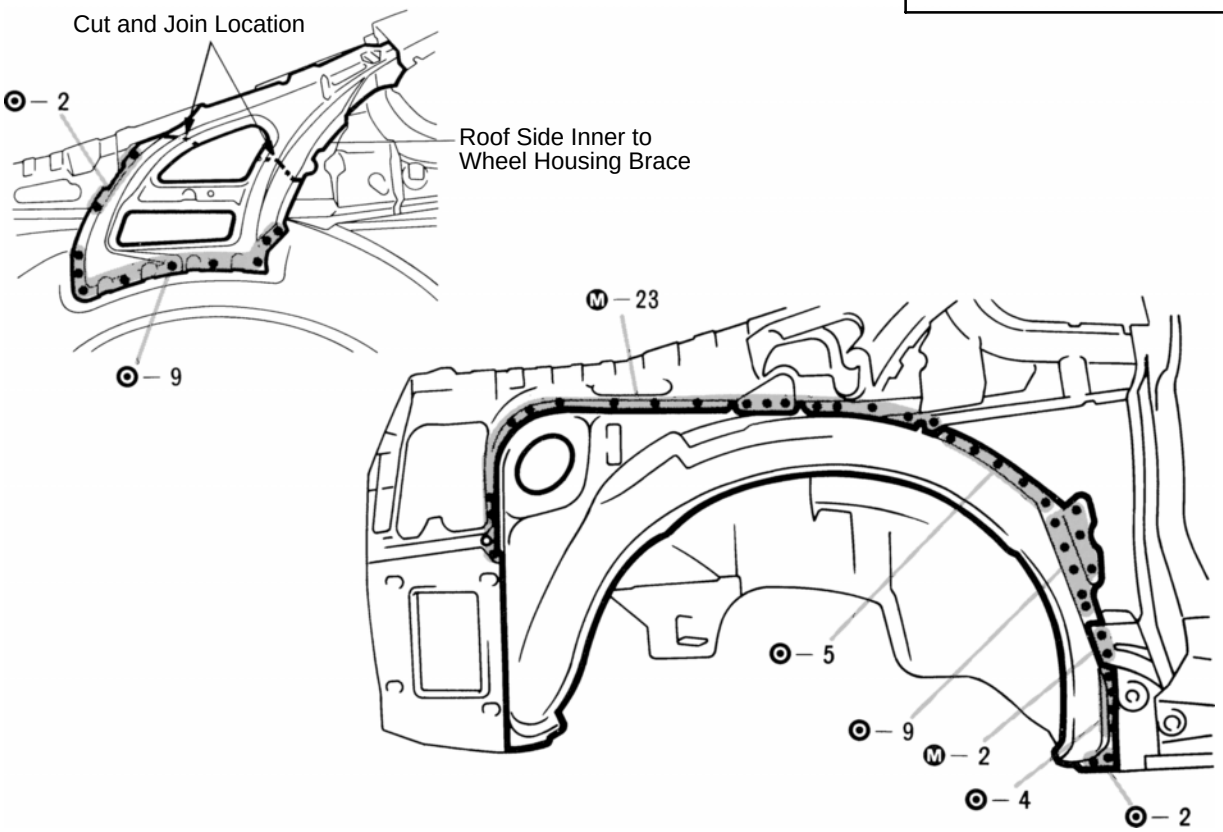

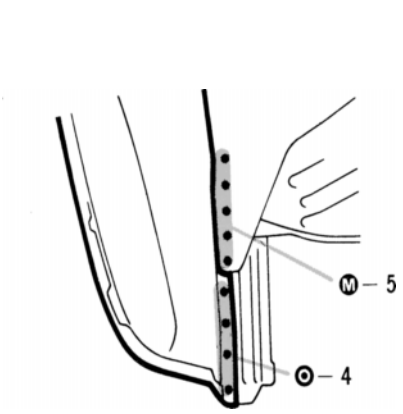

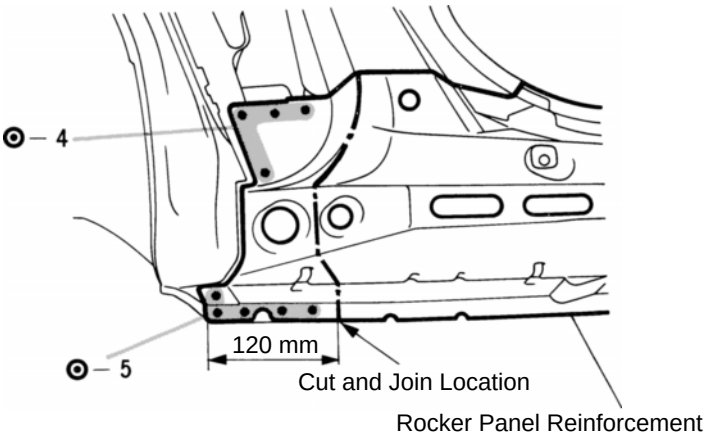

1. Cut the roof side inner to wheel housing brace and the rocker panel reinforcement end at the locations shown above. Remove the quarter wheel housing outer panel.

mm	in.
120	4.72

INSTALLATION

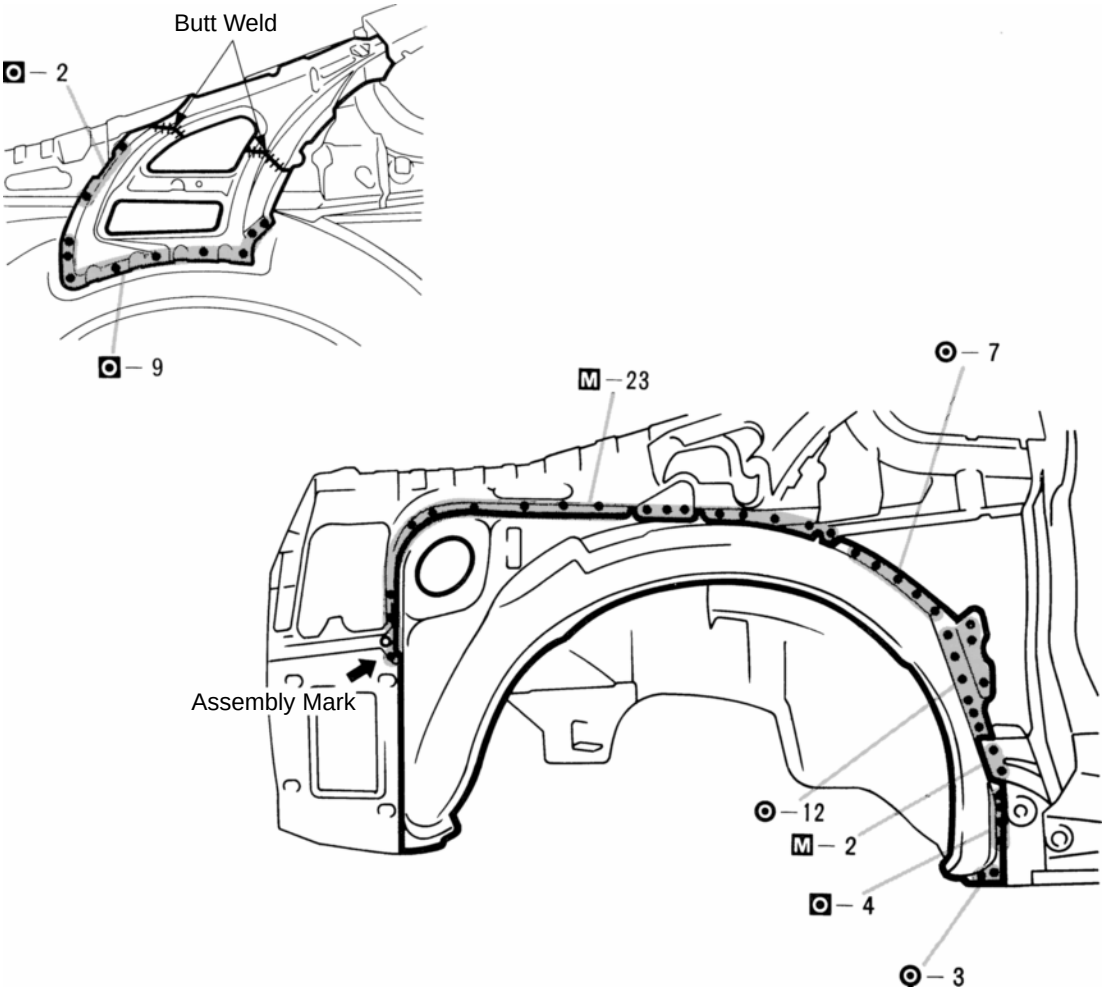

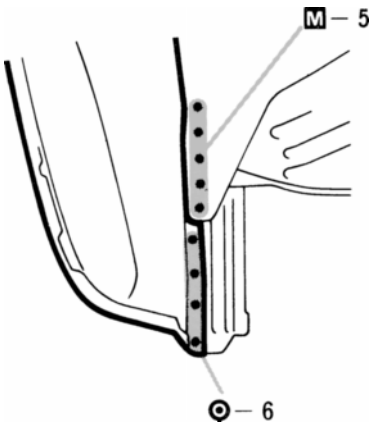

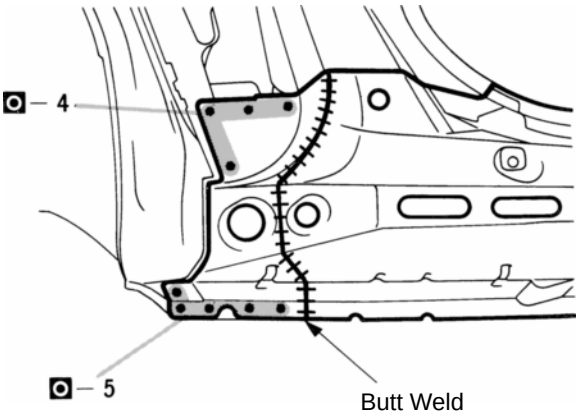

1. Determine the position of the new parts by the assembly marks of the inner and outer panels.

QUARTER WHEEL HOUSING OUTER PANEL (ASSY): Sport Roof Left Side

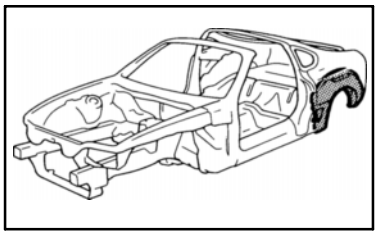

REMOVAL (With the quarter panel removed.)

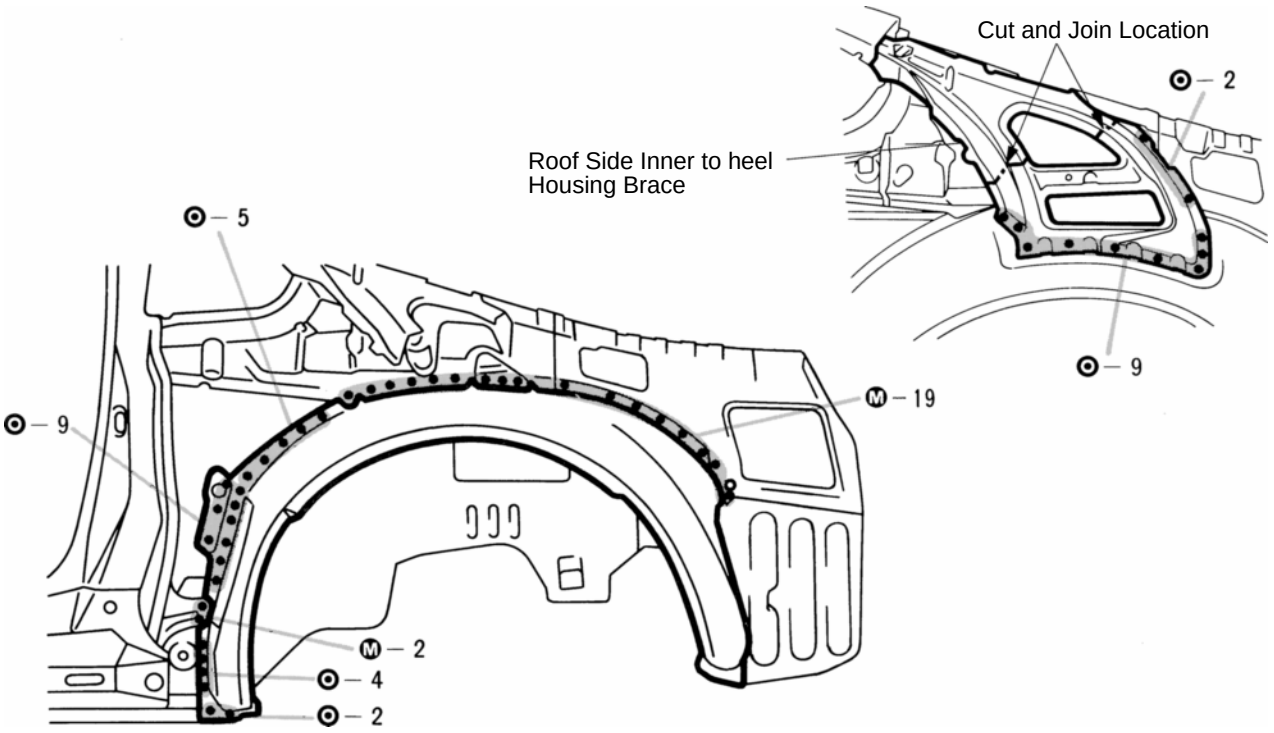

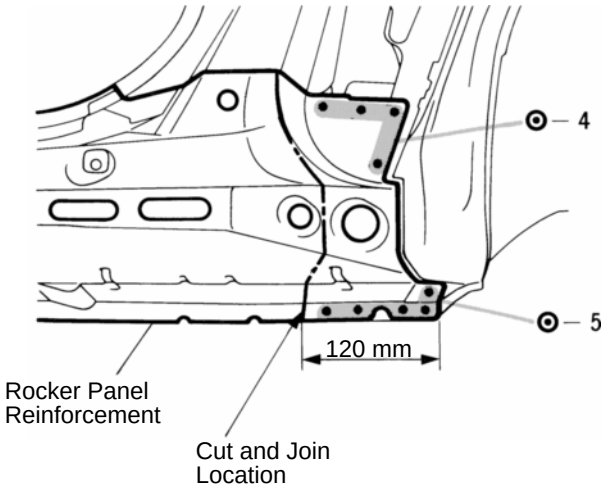

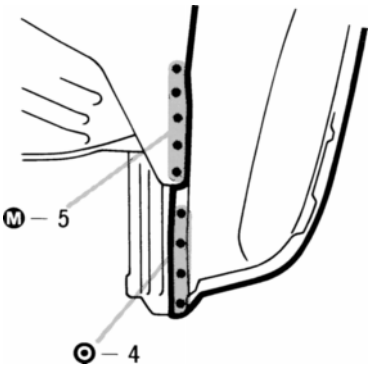

1. Cut the roof side inner to wheel housing brace and the rocker panel reinforcement end at the location shown above. Remove the quarter wheel housing outer panel.

mm	in.
120	4.72

INSTALLATION

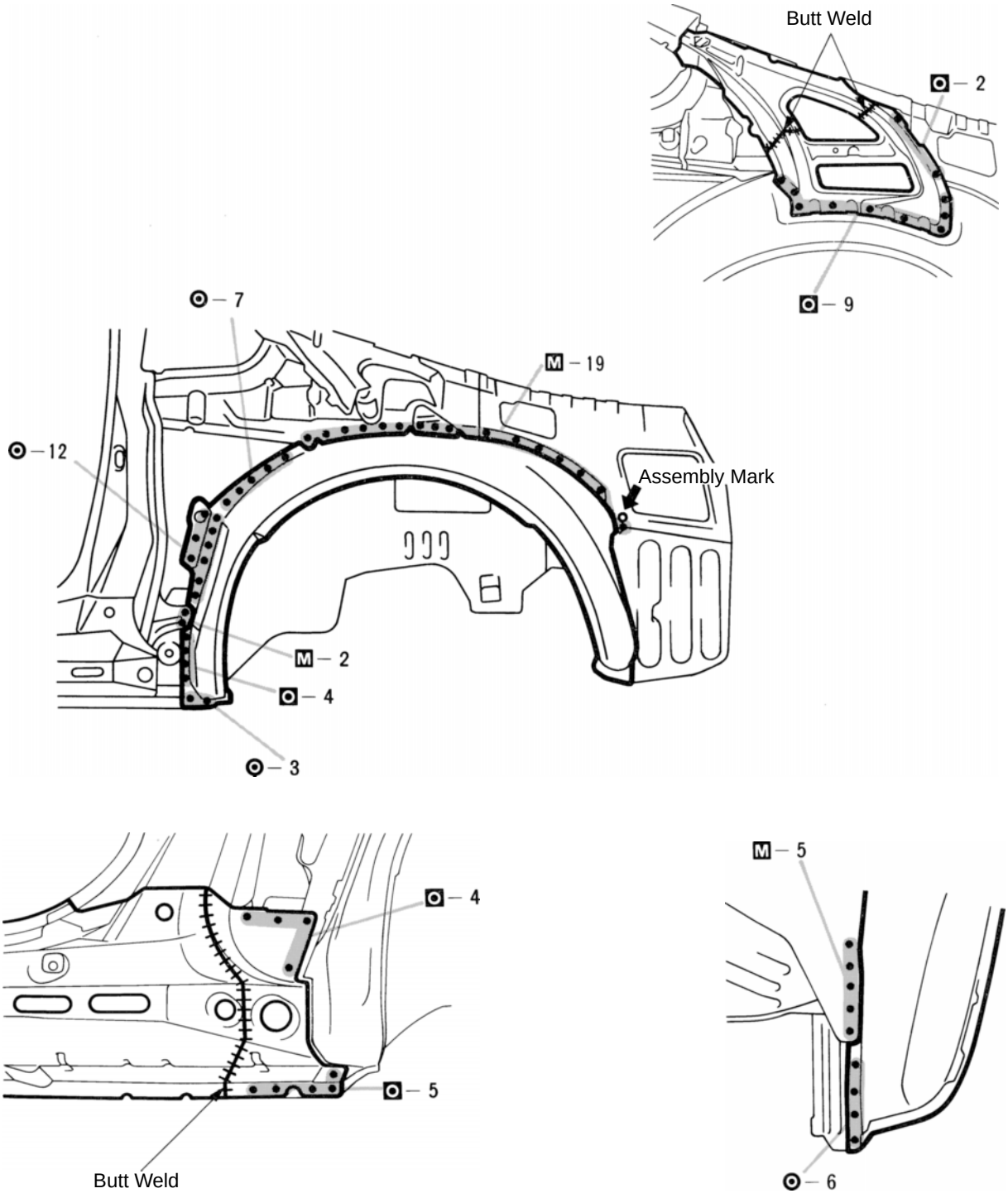

1. Determine the position of the new parts by the assembly marks of the inner and outer panels.

QUARTER INNER PANEL (CUT-P): Left Side

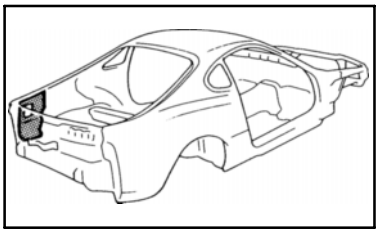

REMOVAL (With the quarter panel and body lower back panel removed.)

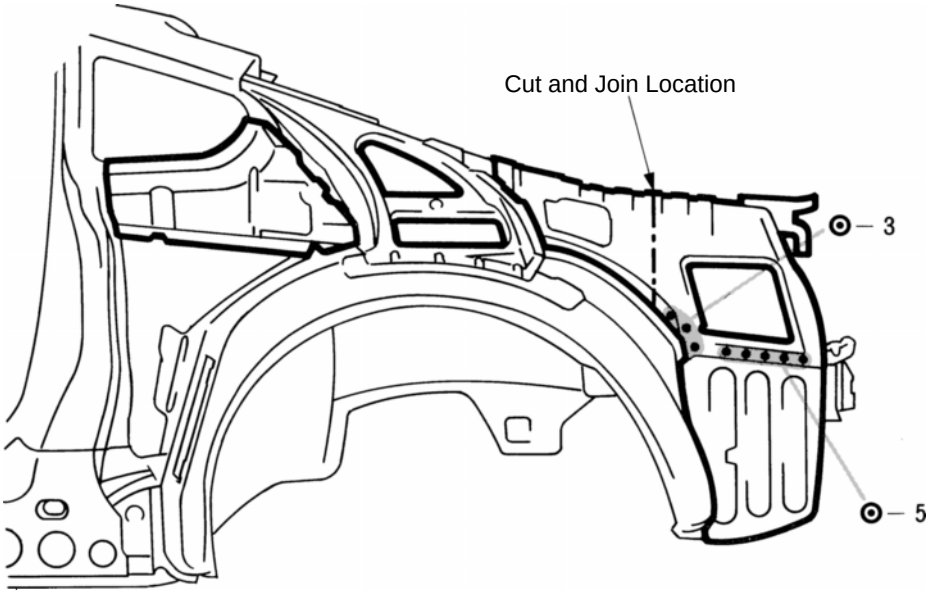

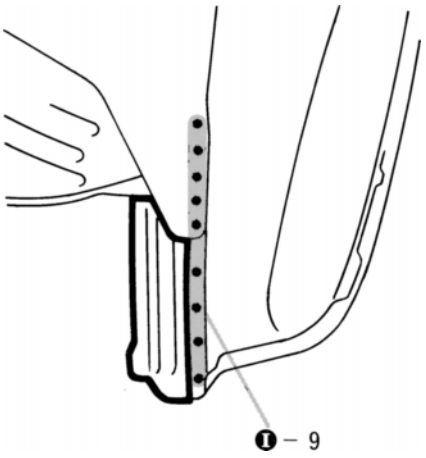

1. Cut and join the parts at the location as shown above.

INSTALLATION

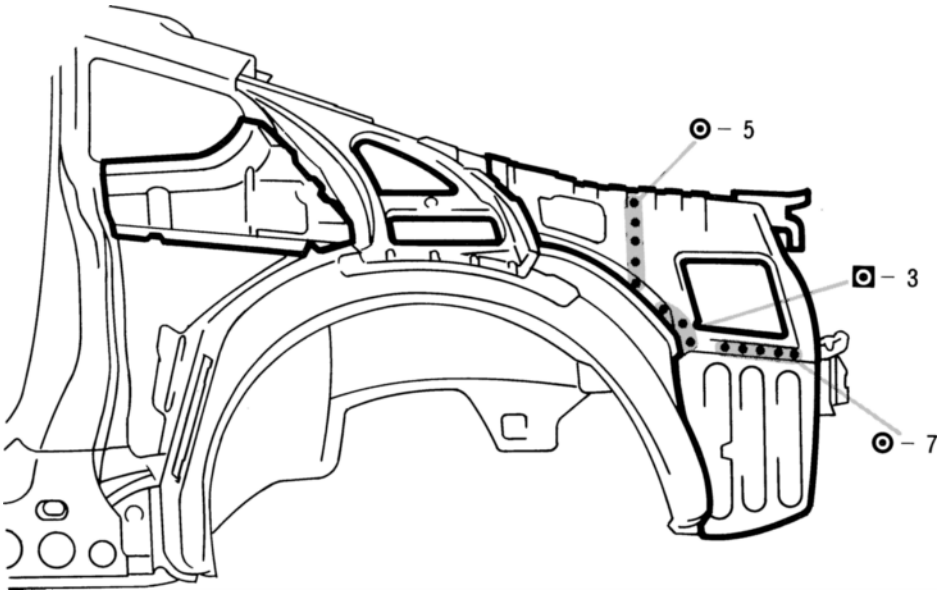

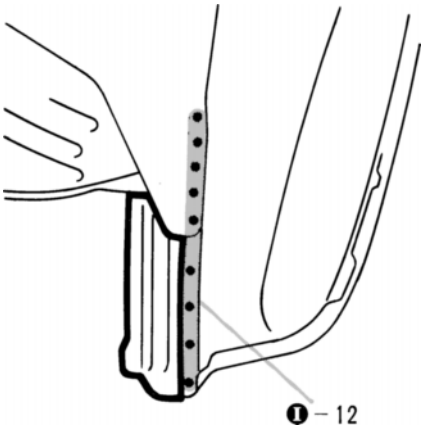

1. Overlap the new parts 20 mm (0.79 in.) at the locations and spot weld.
2. For overlapping areas apply sealer to both sides.

HINT: For other sealing points, refer to section AR.

QUARTER INNER PANEL (CUT-P): Right Side

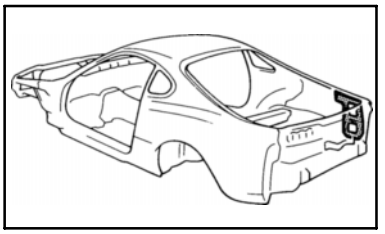

REMOVAL (With the quarter panel and body lower back panel removed.)

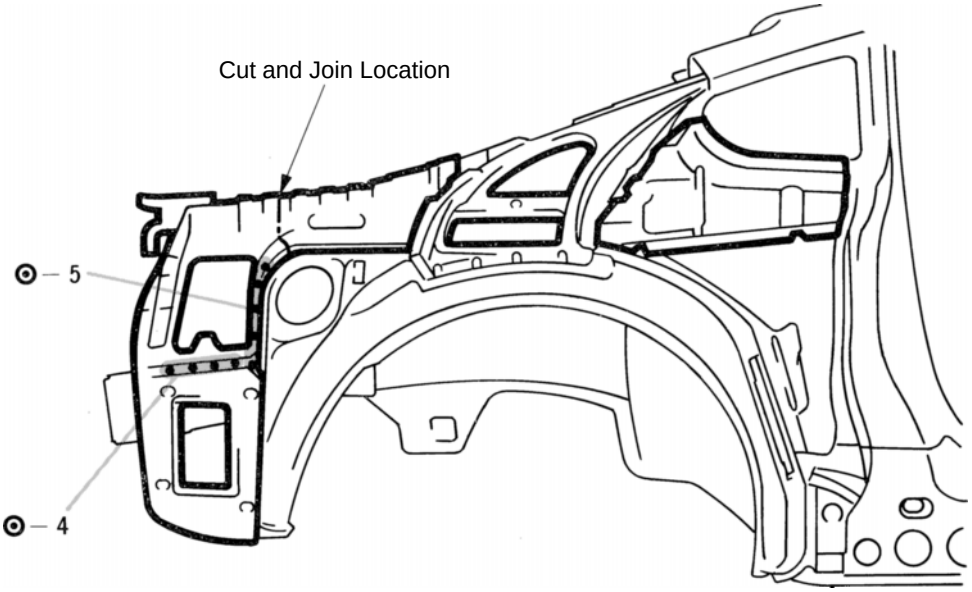

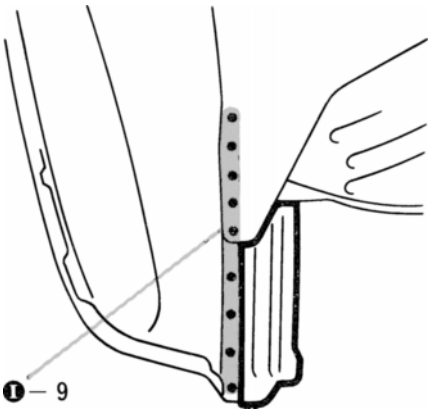

1. Cut and join the parts at the location as shown above.

INSTALLATION

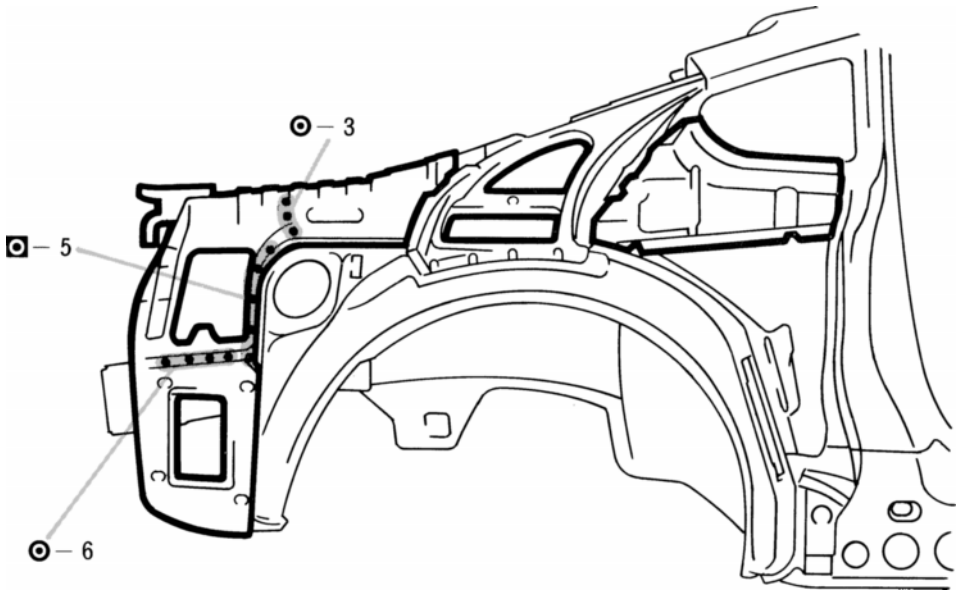

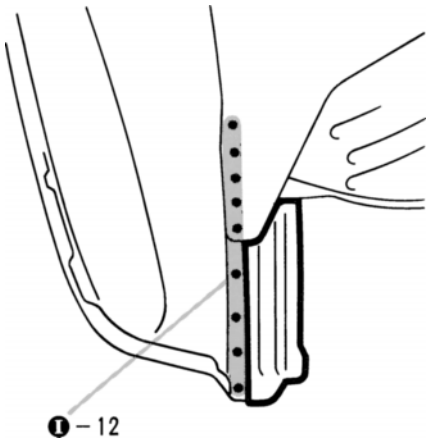

1. Overlap the new parts 20 mm (0.79 in.) at the cut locations and spot weld.
2. For overlapping areas, apply sealer to both sides.

HINT: For other sealing points, refer to section AR.

QUARTER PANEL (CUT)

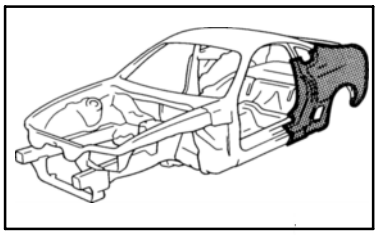

REMOVAL

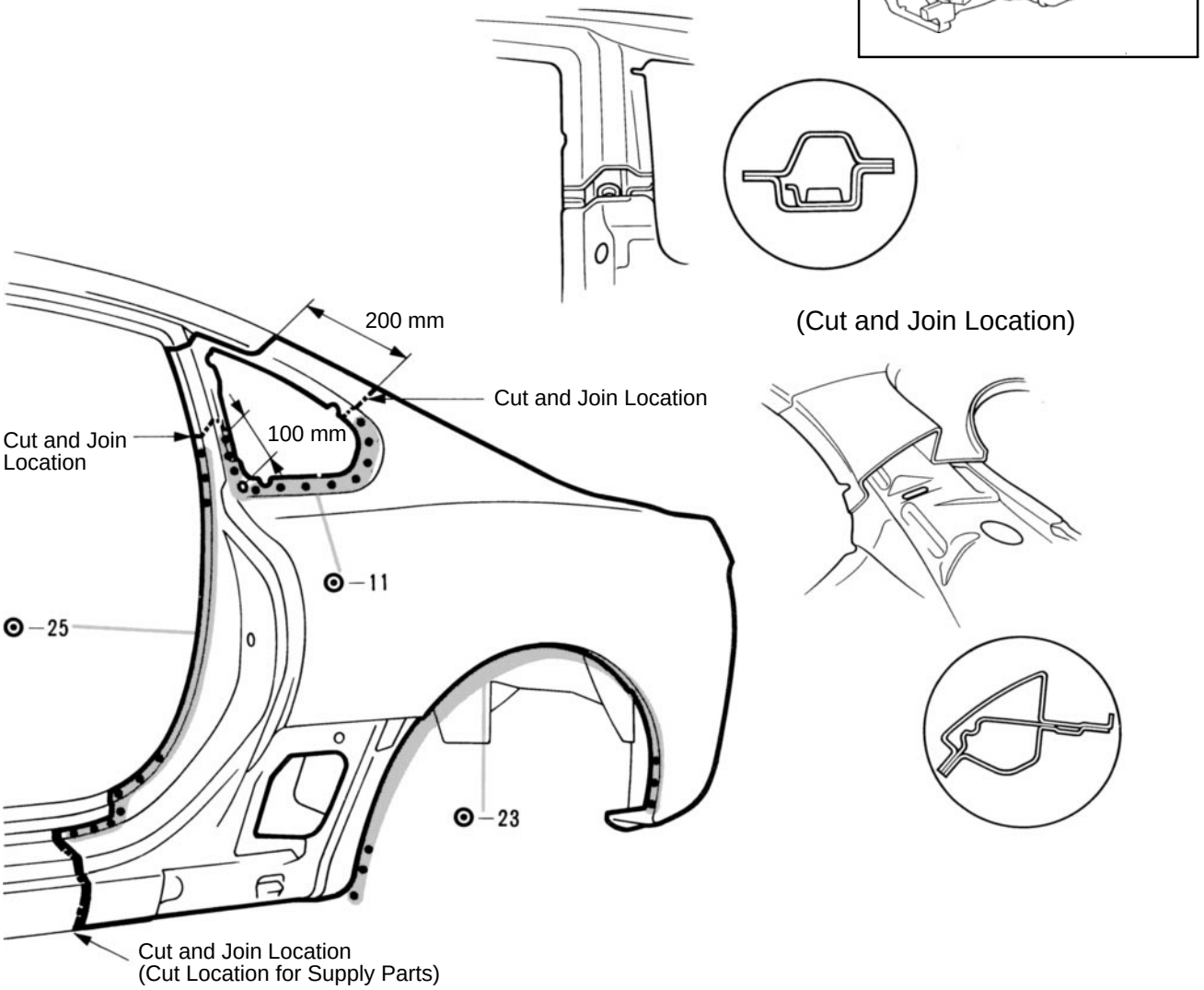

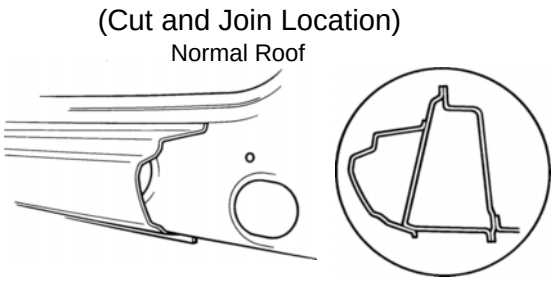

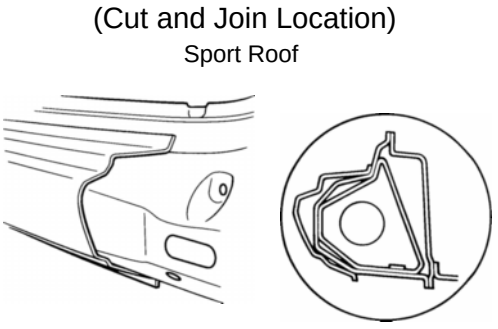

1. Cut and join the parts at the location shown above.

mm	in.
100	3.94
200	7.87

REMOVAL (Cont'd)

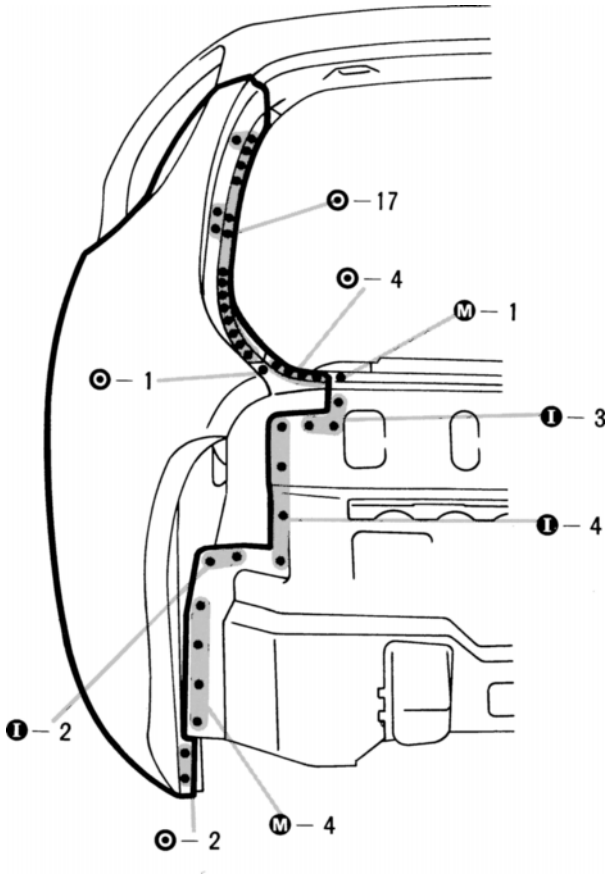

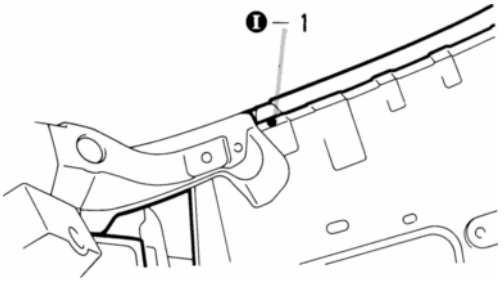

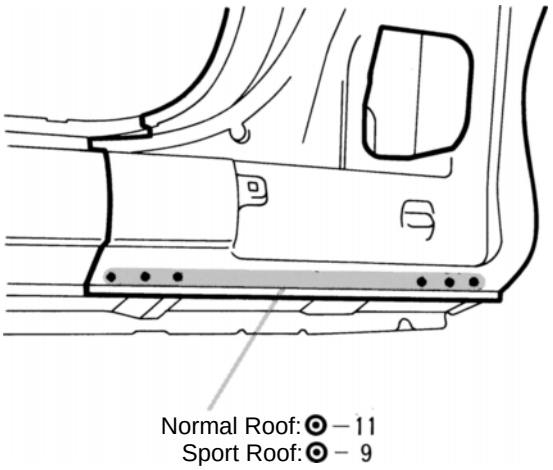

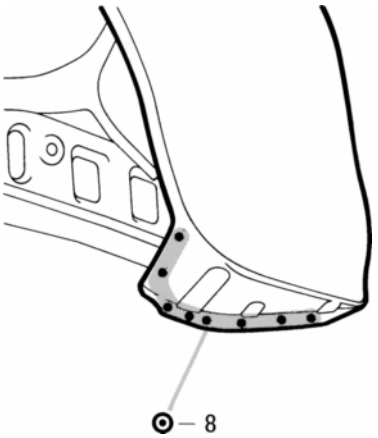

INSTALLATION

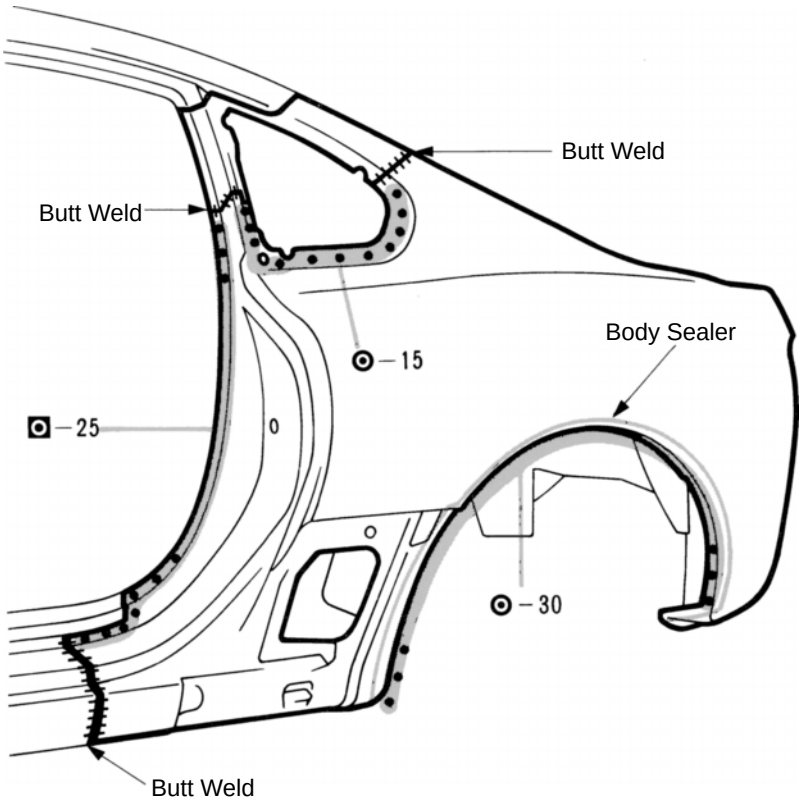

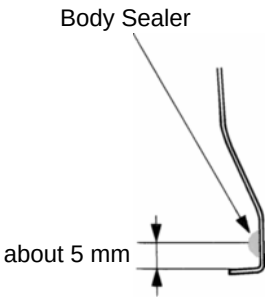

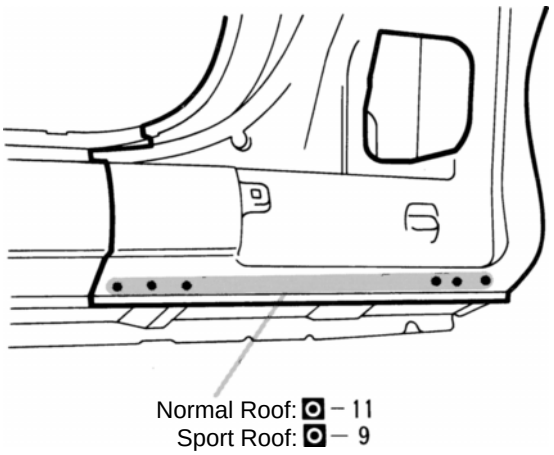

mm	in.
5	0.20

1. Before temporarily installing the new parts, apply body sealer to the wheel arch.

HINT:

1) Apply body sealer about 5 mm (0.20 in.) from the flange, avoiding any oozing.
2) Apply sealer evenly, about 3 - 4 mm (0.12 - 0.16 in.) in diameter.
3) For other sealing points, refer to section AR.

2. Temporarily install the new parts and check the fit of the front door, back door and rear combination lamp.
3. Apply foamed material to the pillar section.

HINT: For the foamed material application areas, refer to page AP-4 .

INSTALLATION (Cont'd)

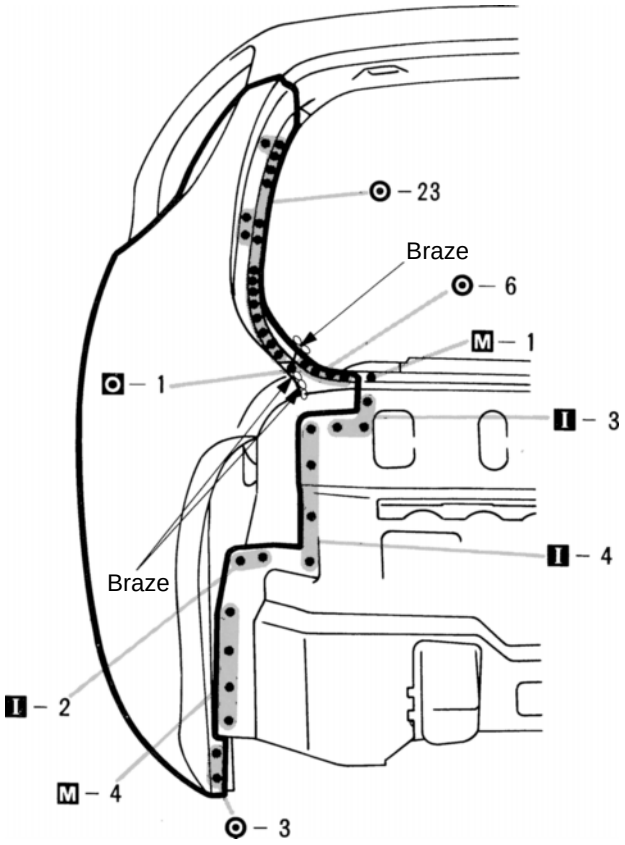

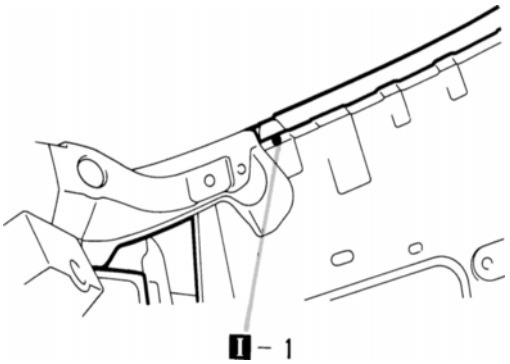

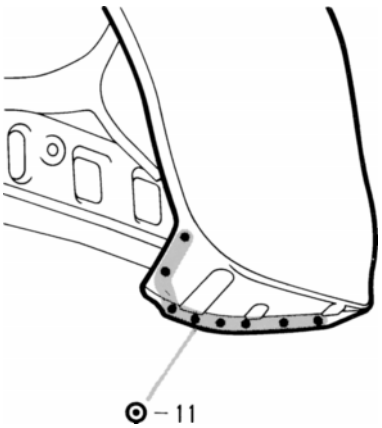

QUARTER WHEEL HOUSING OUTER PANEL (ASSY): Normal Roof Right Side

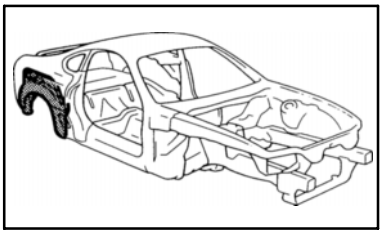

REMOVAL (With the quarter panel removed.)

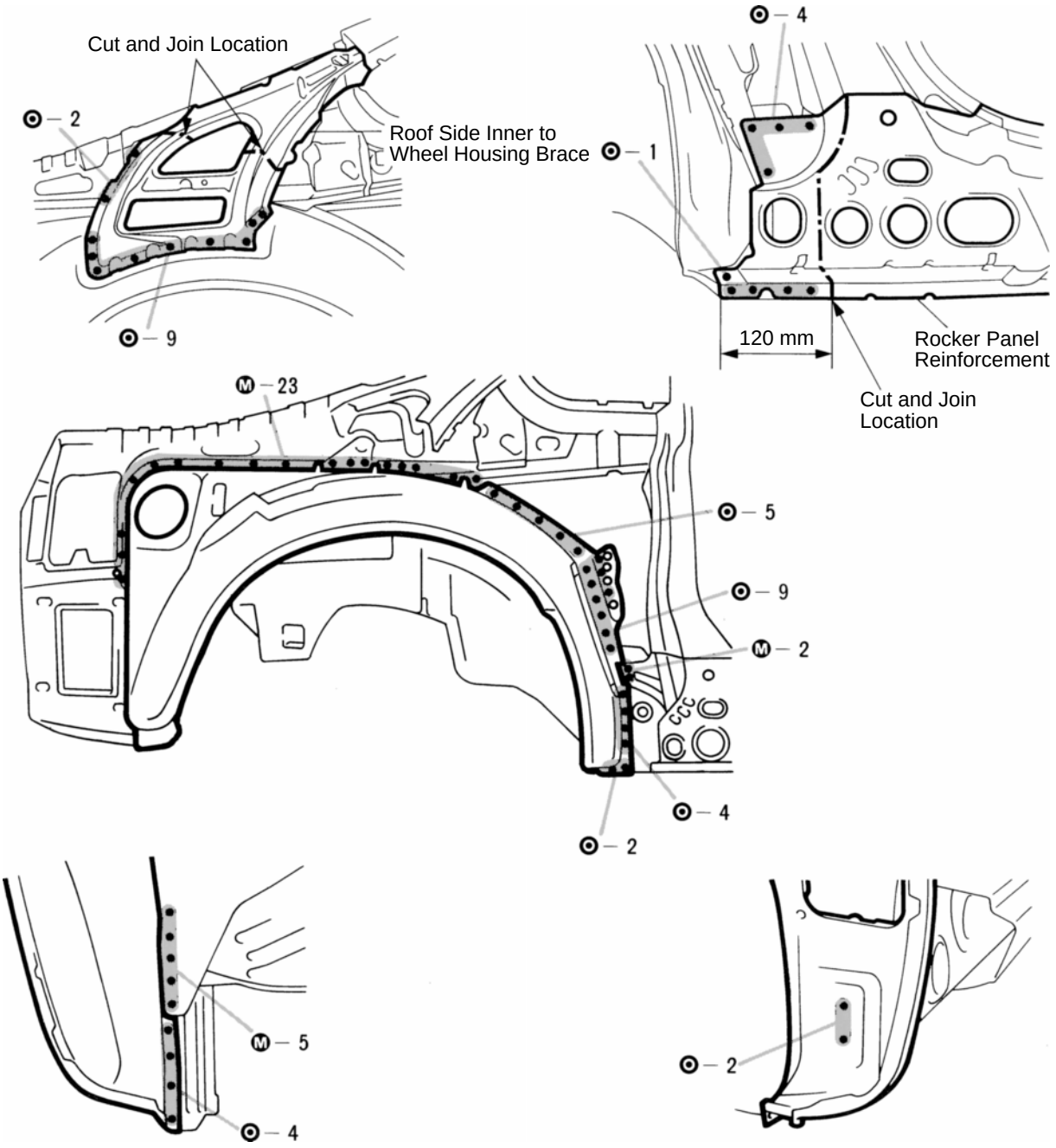

1. Cut the roof side inner to wheel housing brace and the rocker panel reinforcement end at the locations noted above. Remove the quarter wheel housing outer panel.

mm	in.
120	4.72

INSTALLATION

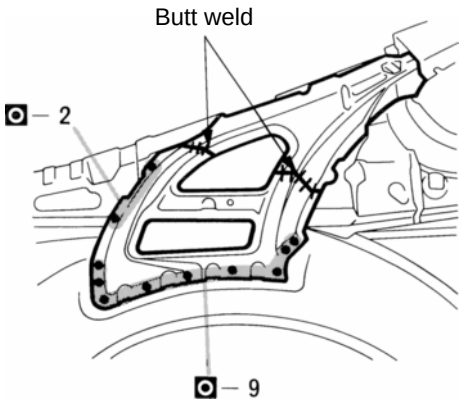

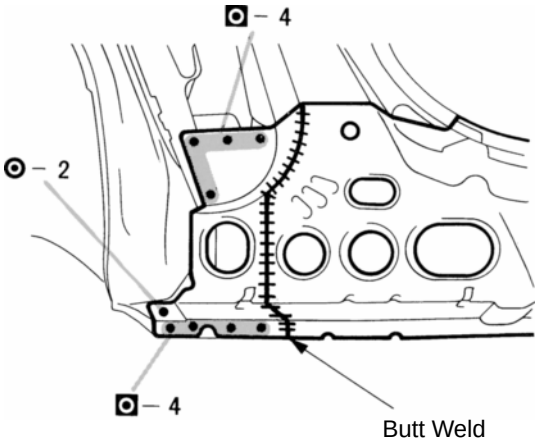

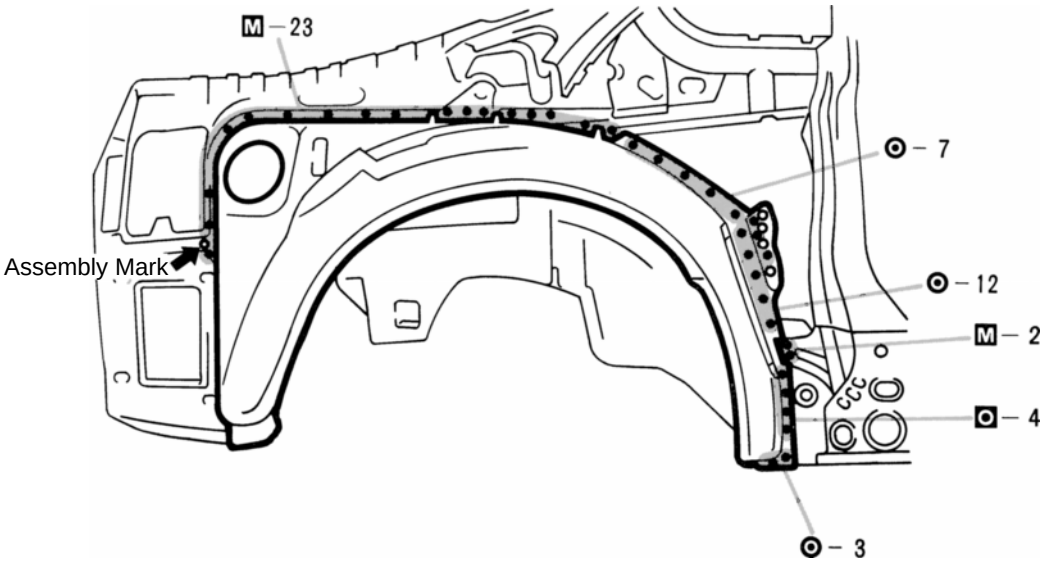

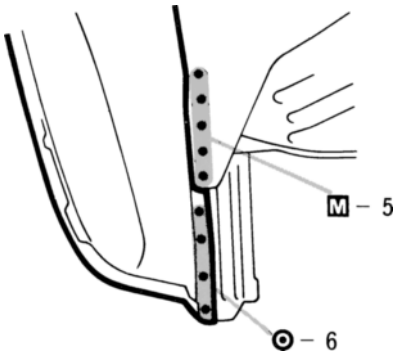

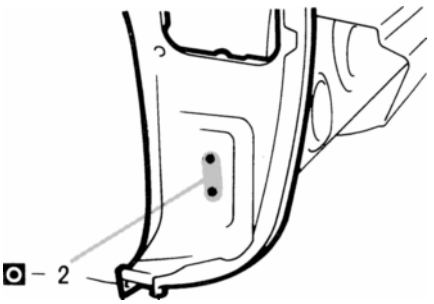

1. Determine the position of the new parts by the assembly marks of the inner and outer panels.

RADIATOR UPPER SUPPORT (ASSY)

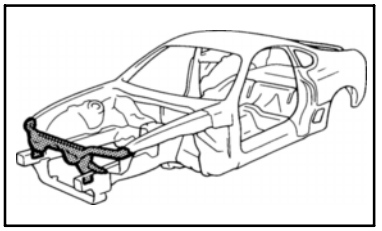

REMOVAL

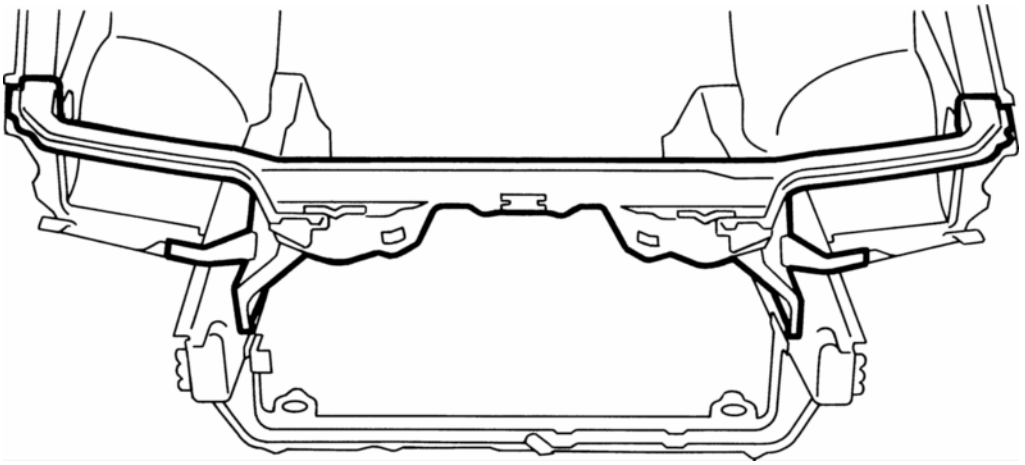

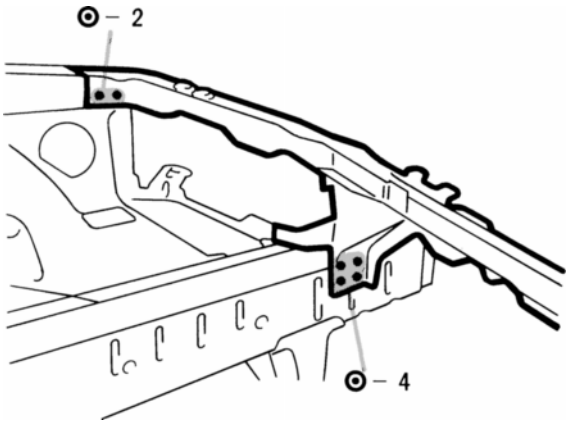

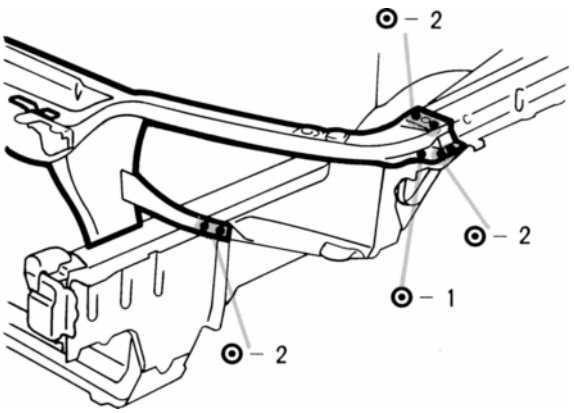

INSTALLATION

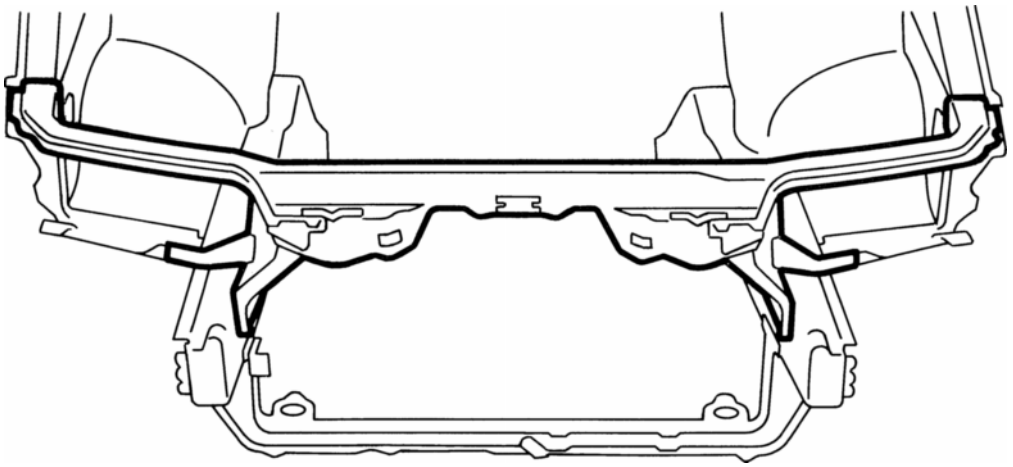

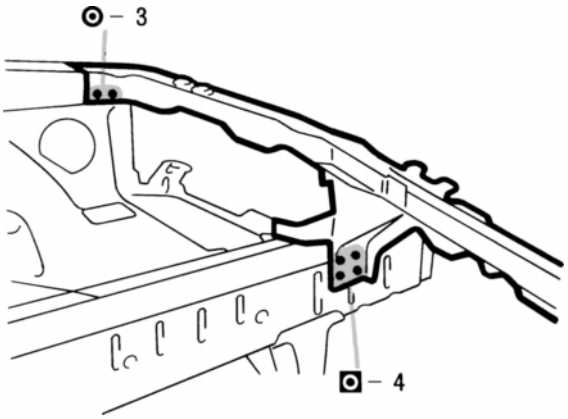

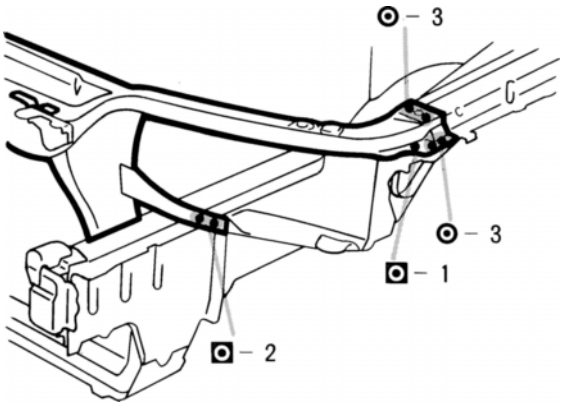

1. Temporarily install the new parts and measure each part in accordance with the body dimension diagram.

HINT: First install the hood lock support.

REAR FLOOR PAN TO QUARTER PANEL EXTENSION (ASSY)

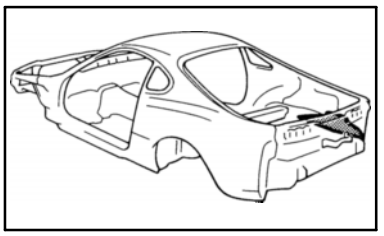

REMOVAL (With the body lower back panel removed.)

(Right Side)

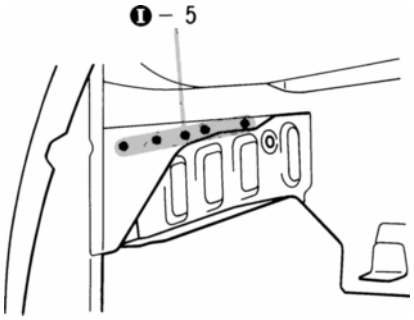

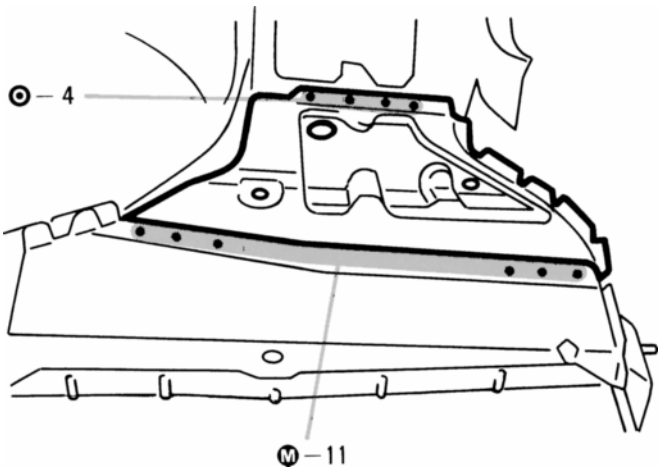

(Left Side)

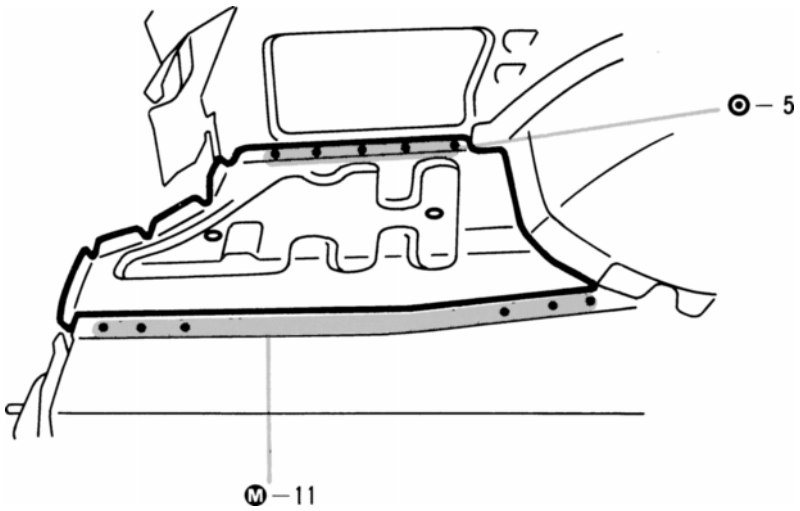

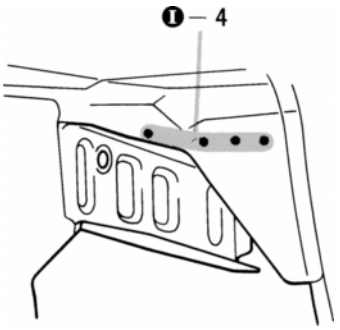

1. Push down on the rear floor pan to quarter panel extension and remove it.

INSTALLATION

(Right Side)

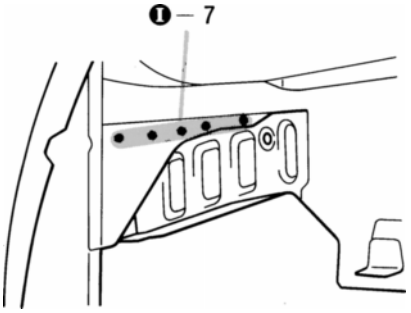

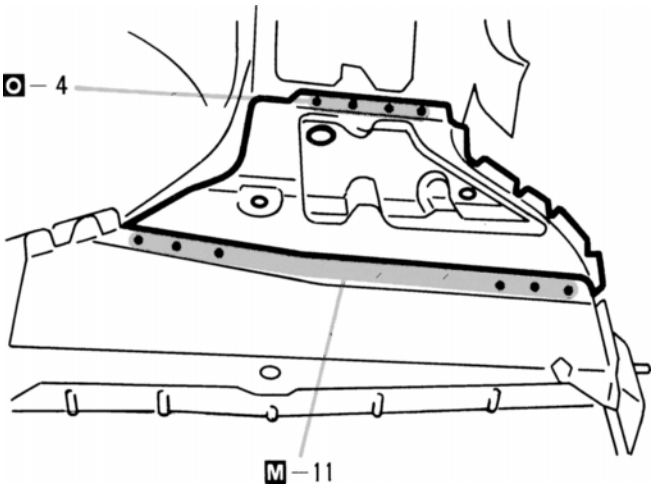

(Left Side)

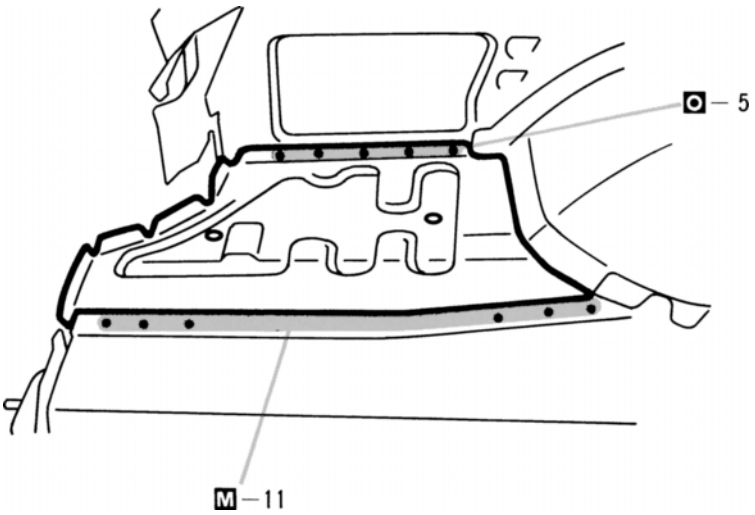

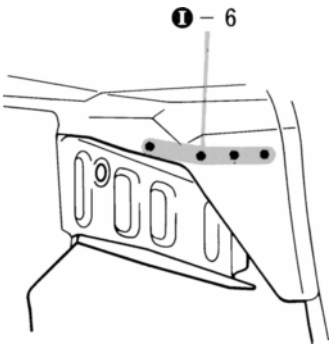

REAR FLOOR SIDE REAR MEMBER (ASSY)

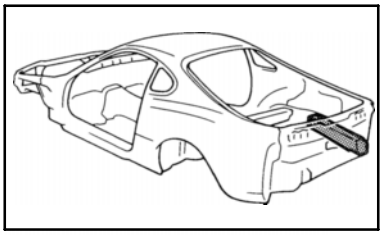

REMOVAL (With the rear floor pan and rear floor pan to quarter panel extension removed.)

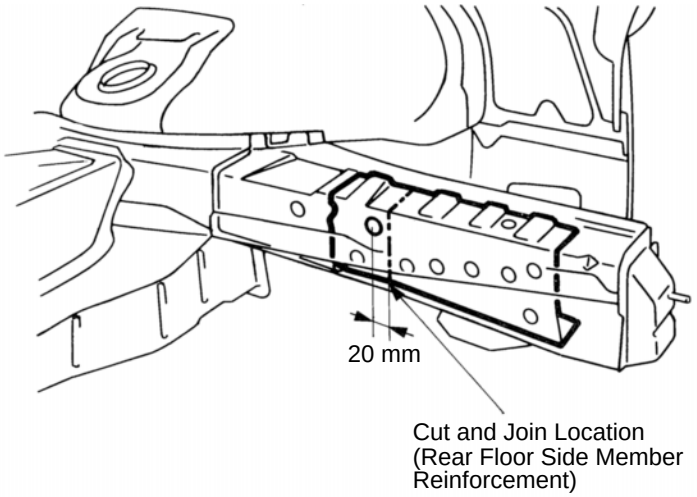

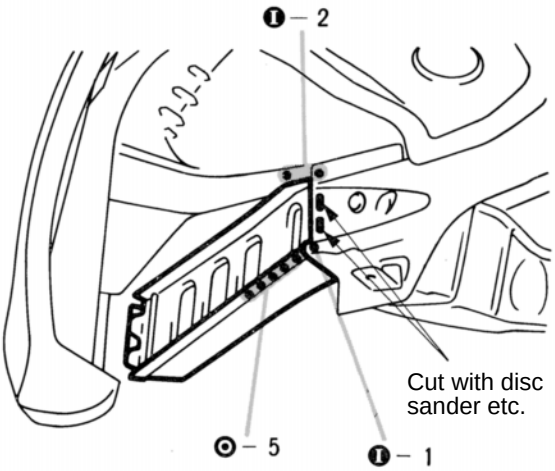

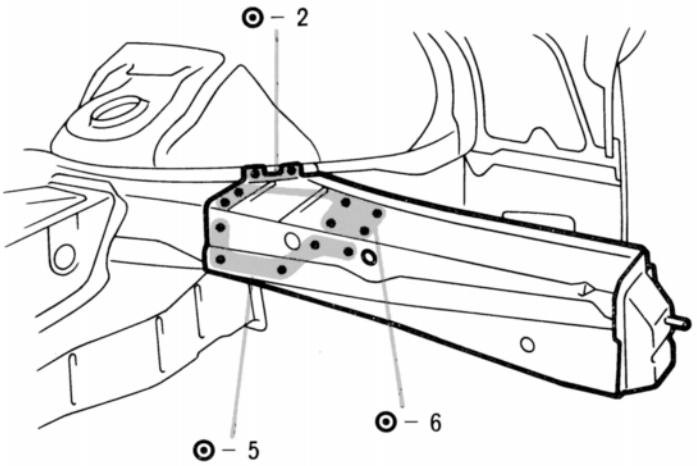

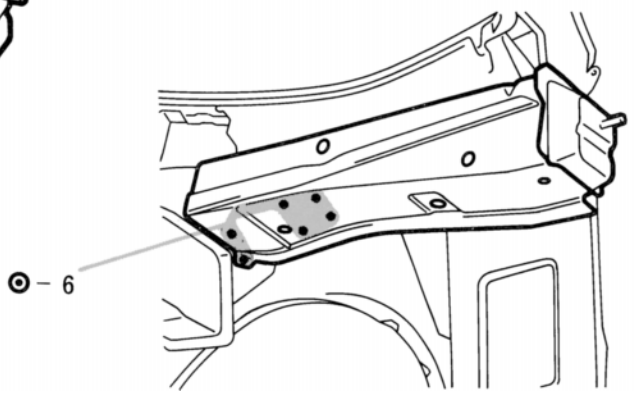

1. Cut out the rear floor side member reinforcement at the cut location indicated above.

mm	in.
20	0.79

INSTALLATION

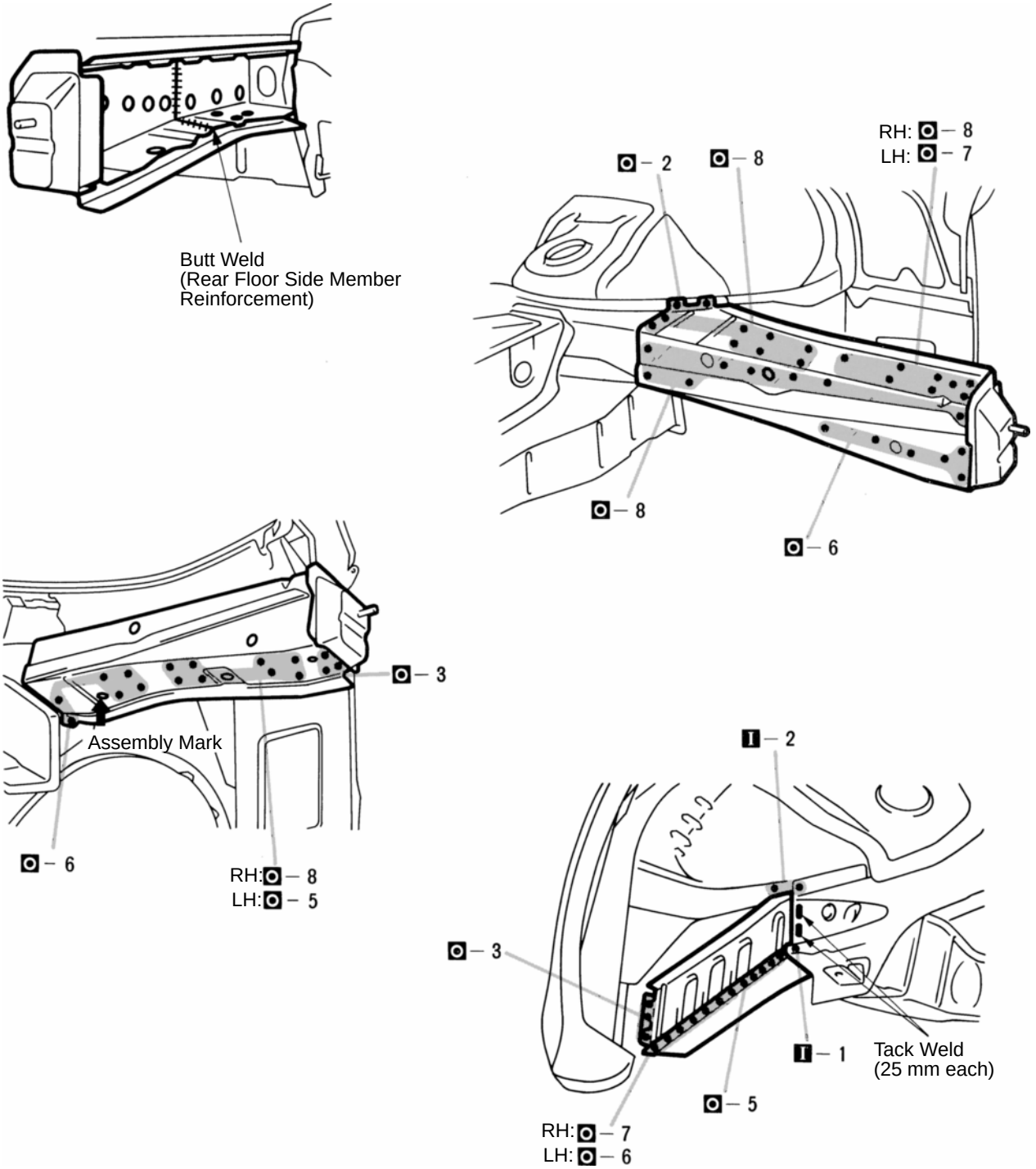

mm	in.
25	0.98

1. When temporarily installing the new parts, determine the installation position by the assembly mark. Then, measure each part in accordance with the body dimension diagram.

REAR FLOOR NO. 2 CROSSMEMBER (ASSY)

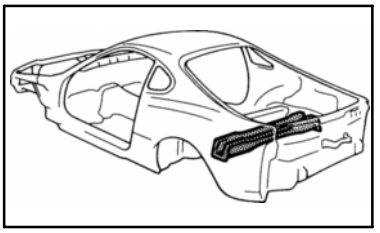

REMOVAL

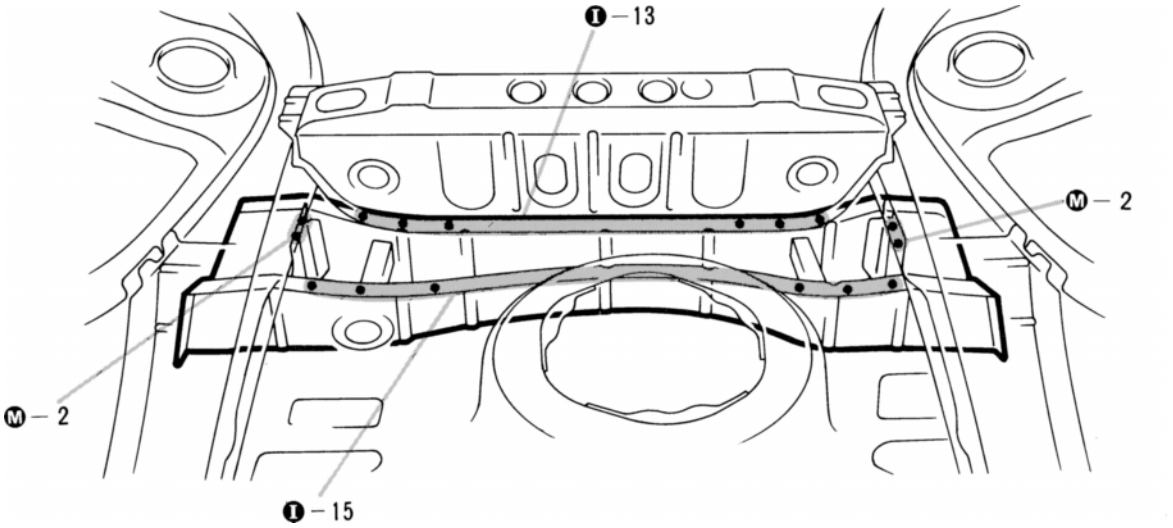

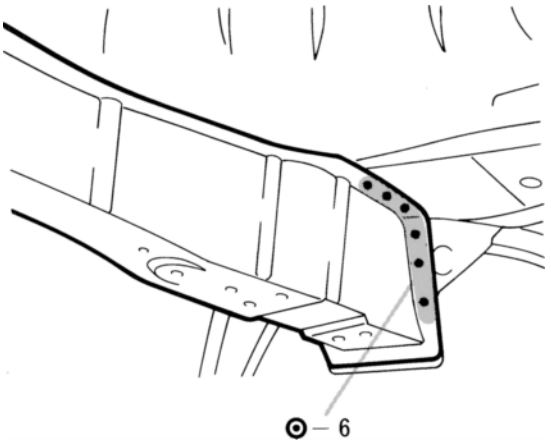

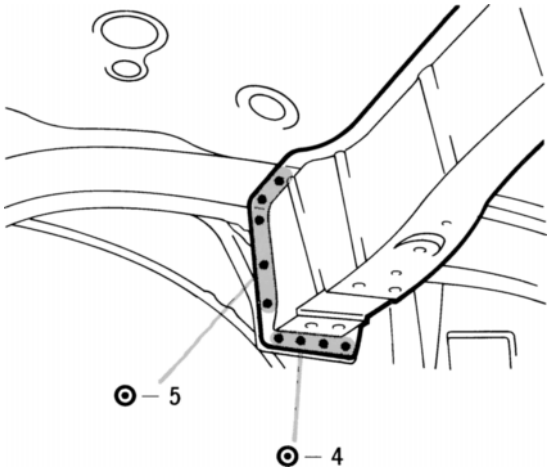

INSTALLATION

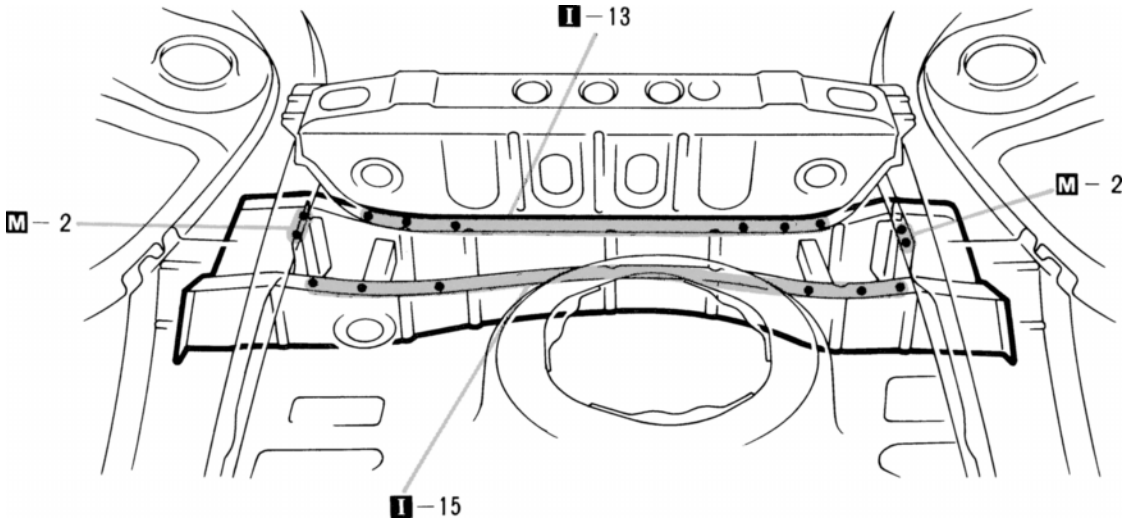

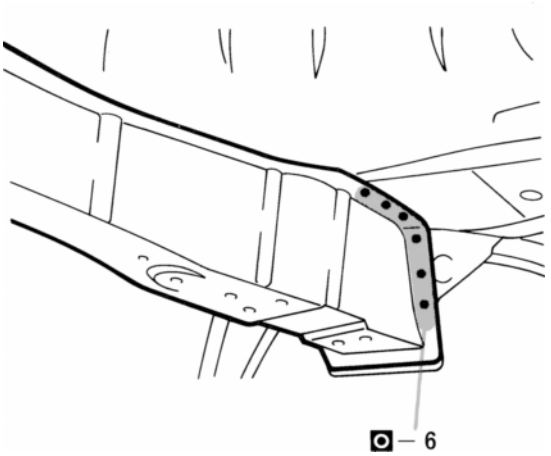

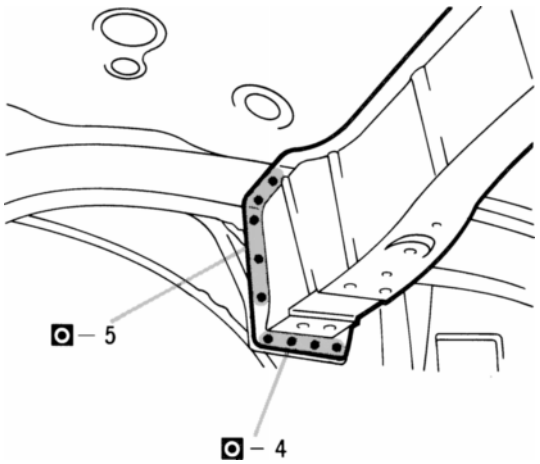

1. Temporarily install the new parts and measure each part in accordance with the body dimension diagram.

REAR FLOOR PAN (ASSY)

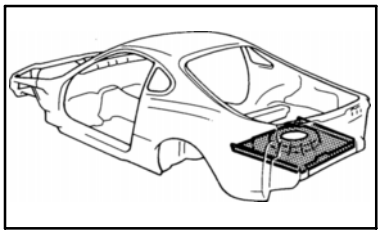

REMOVAL (With the body lower back panel removed.)

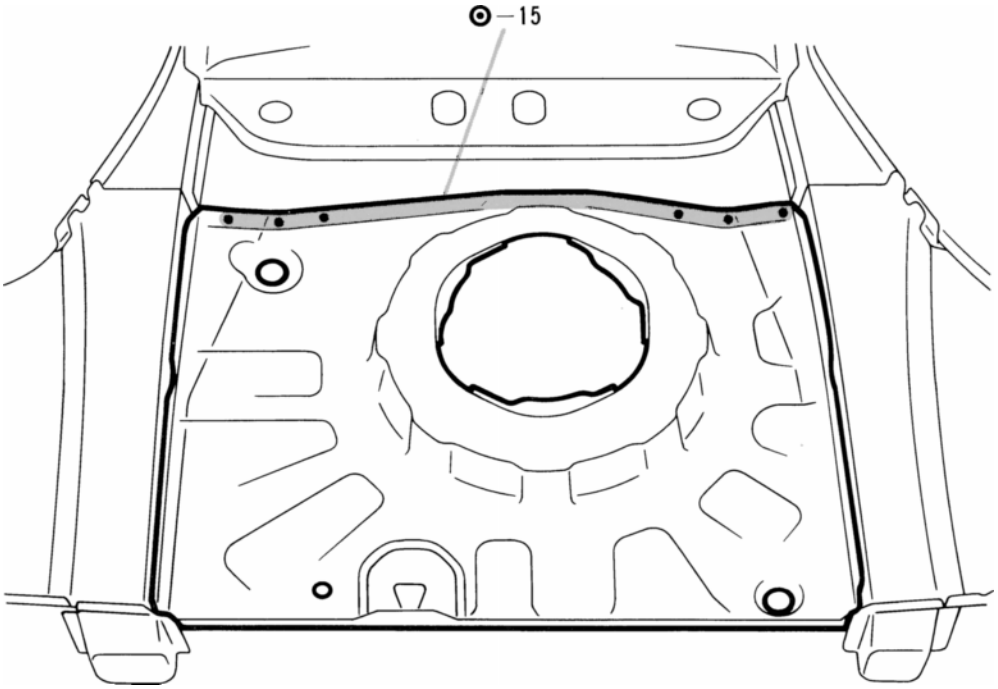

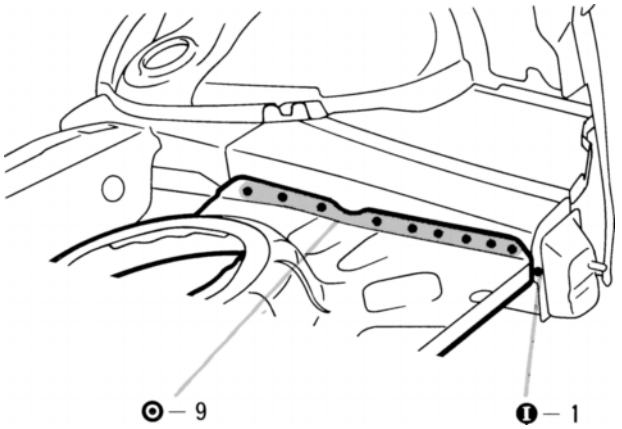

INSTALLATION

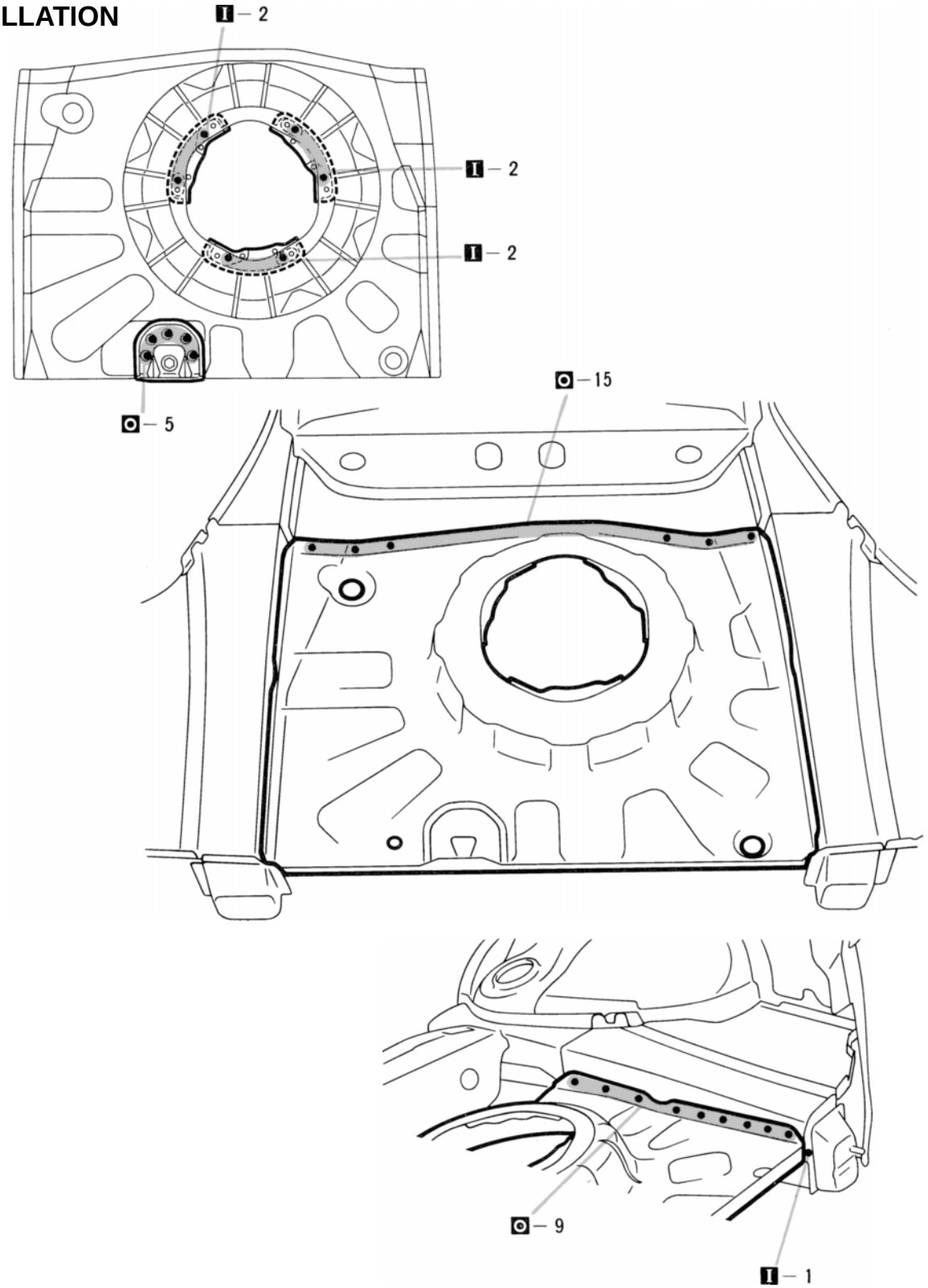

REAR SUSPENSION CROSSMEMBER

(Three-Dimensional Distance)

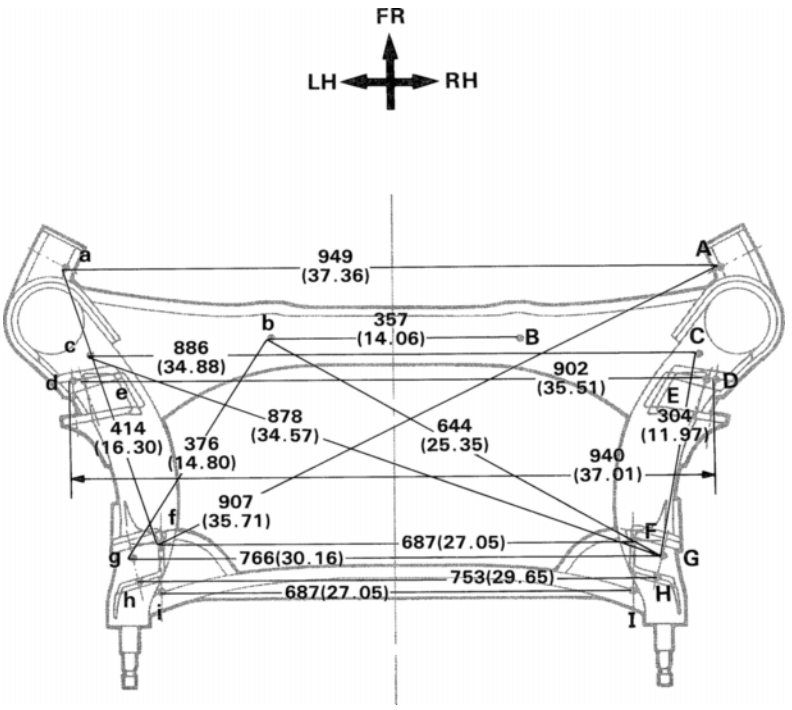

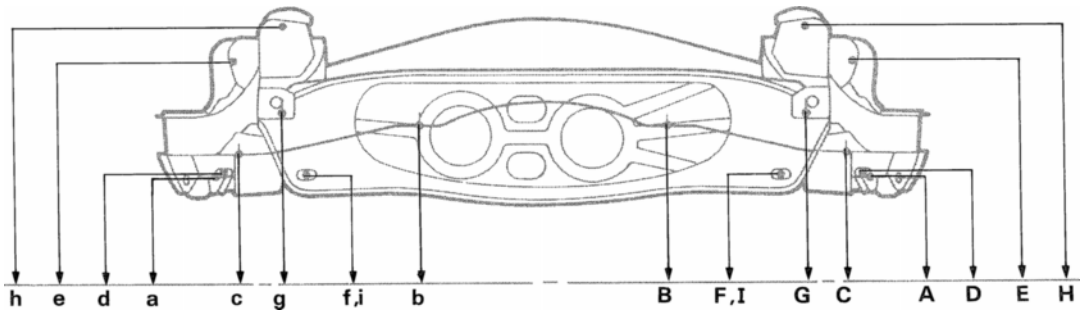

NO8909
NO8909

mm (in.)

Symbol	Name	Hole dia.	Symbol	Name	Hole dia.
A, a	Strut rod installation hole-inner	14.2 (0. 559)	F, f	No. 2 lower arm installation hole-front	26×14.2 (1.02×0.559)
B, b	Differential carrier installation nut	12 (0.47) nut	G, g	Rear suspension member standard hole	20 (0.79)
C, c	Rear suspension member standard hole	20 (0.79)	H, h	Upper arm installation hole-rear	14.2 (0.559)
D, d	No. 1 lower arm installation hole-front	26x 14.2 (1.02×0.559)	I, i	No. 2 lower arm installation hole-rear	26×14.2 (1.02×0.559)
E, e	Upper arm installation hole-front	14.2 (0.559)	—	—	—

REAR SUSPENSION CROSSMEMBER (Cont'd)

(Two-Dimensional Distance)

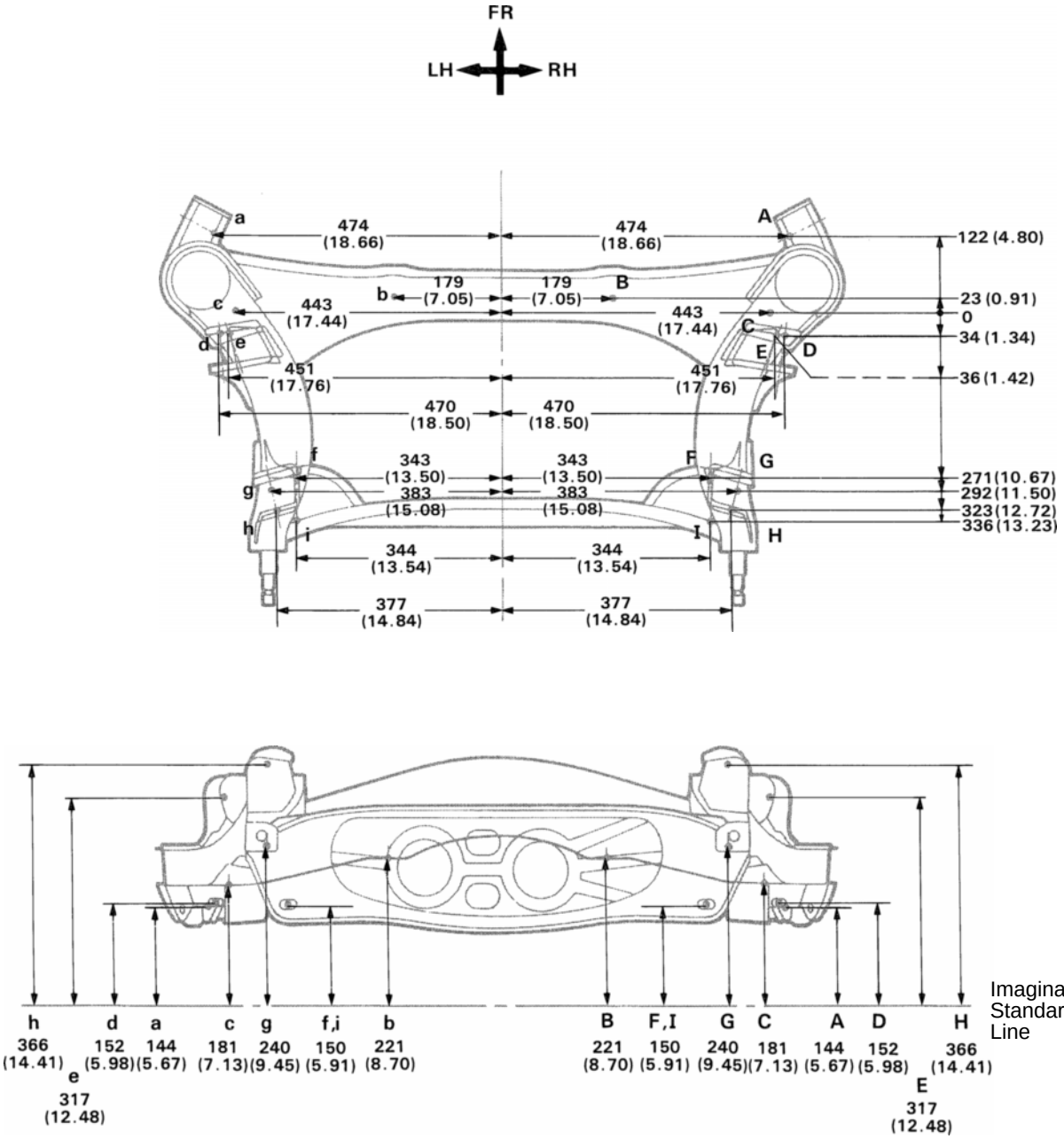

NO8909
NO8909

mm (in.)

Symbol	Name	Hole dia.	Symbol	Name	Hole dia.
A, a	Strut rod installation hole-inner	14.2 (0.559)	F, f	No. 2 lower arm installation hole-front	26×14.2 (1.02×0.559)
B, b	Differential carrier installation nut	12 (0.47) nut	G, g	Rear suspension member standard hole	20 (0.79)
C, c	Rear suspension member standard hole	20 (0.79)	H, h	Upper arm installation hole-rear	14.2 (0.559)
D, d	No. 1 lower arm installation hole-front	26×14.2 (1.02×0.559)	I, i	No. 2 lower arm installation hole-rear	26×14.2 (1.02×0.559)
E, e	Upper arm installation hole-front	14.2 (0.559)	—	—	—

ROCKER OUTER PANEL (CUT)

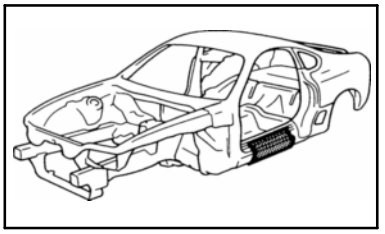

REMOVAL

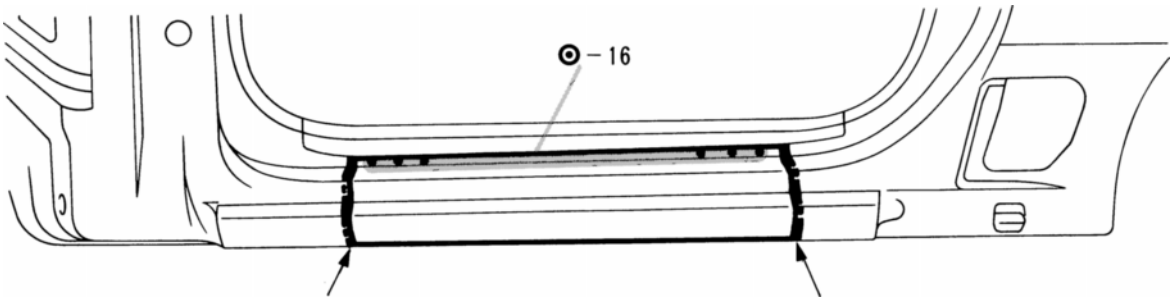

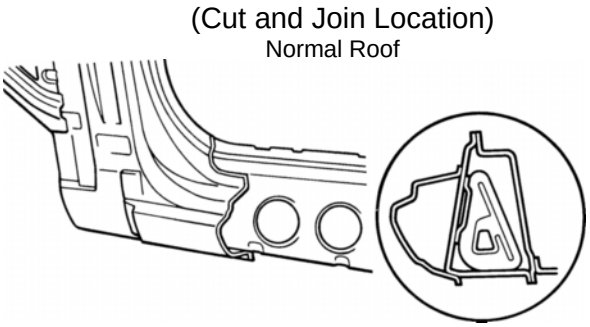

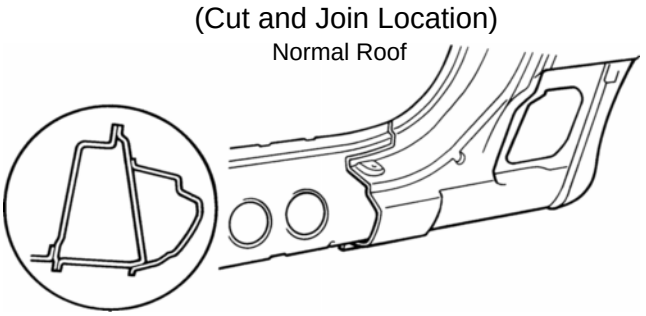

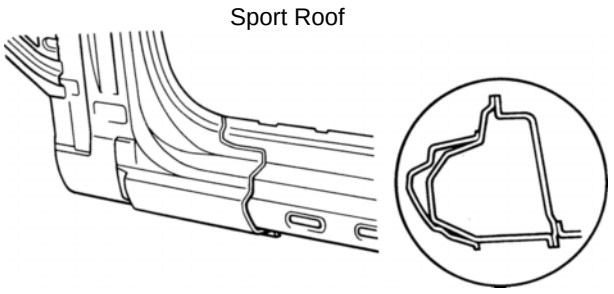

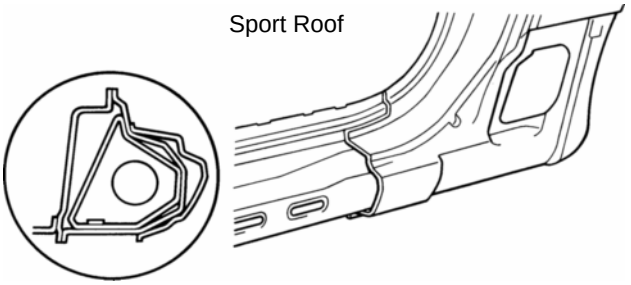

1. Cut and join the parts at the location as shown above.

HINT:

1) Be careful to cut so the rocker panel reinforcement is not damaged.

INSTALLATION

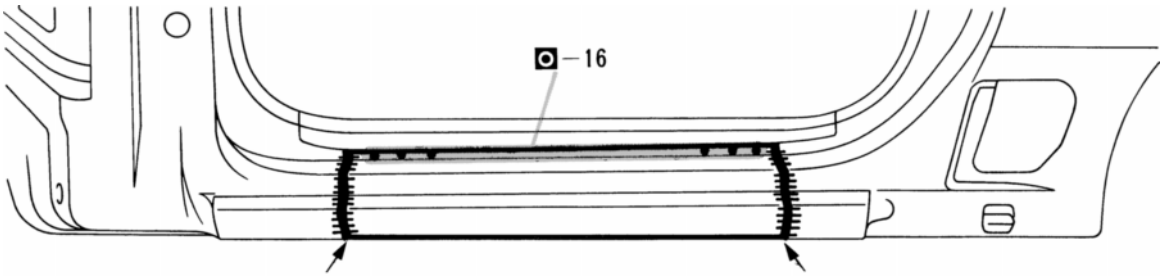

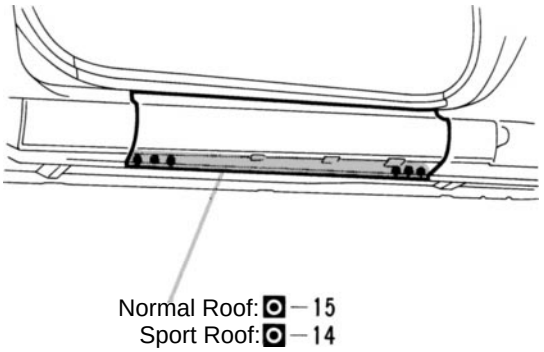

1. Temporarily install the new parts and check the fit of the front door.

ROOF PANEL (ASSY): Sport Roof

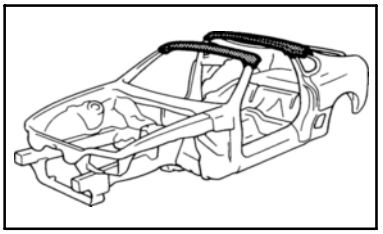

REMOVAL

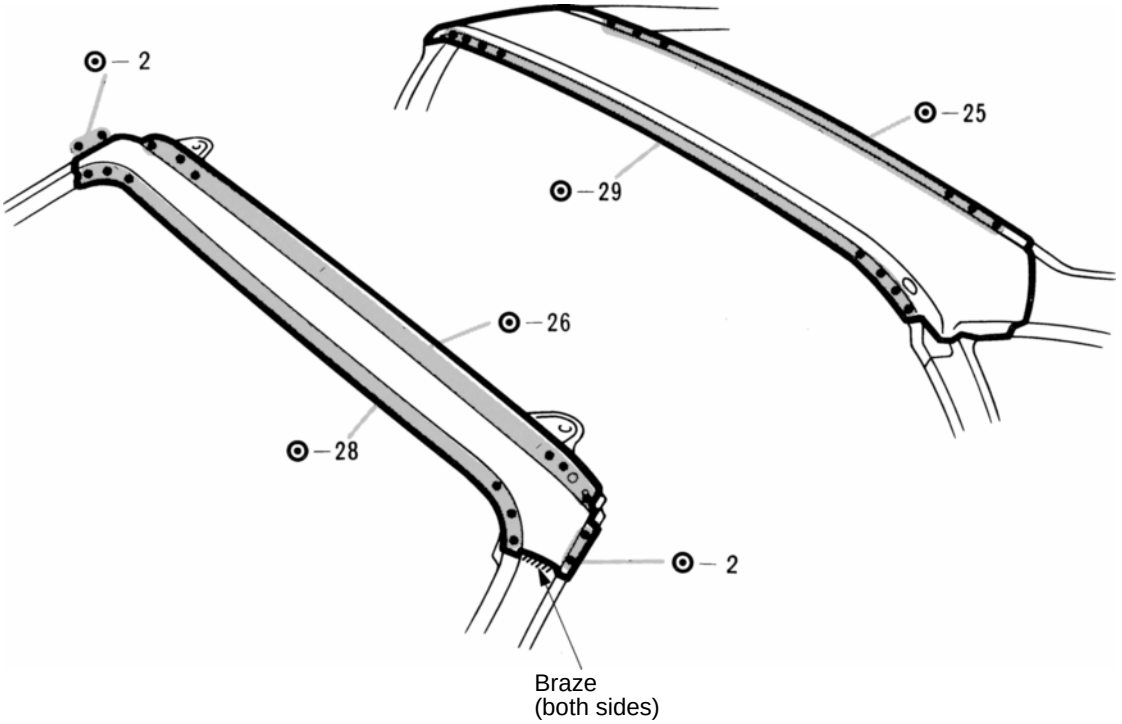

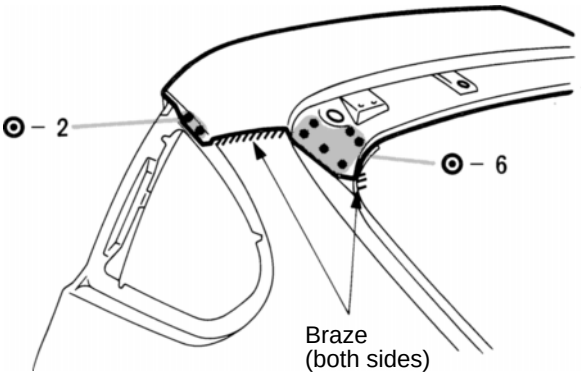

1. Heat the brazed area of the front body pillar and quarter panel and scrape off the brazing with a wire brush.

HINT: Be careful not to overheat the pillar sides.

INSTALLATION

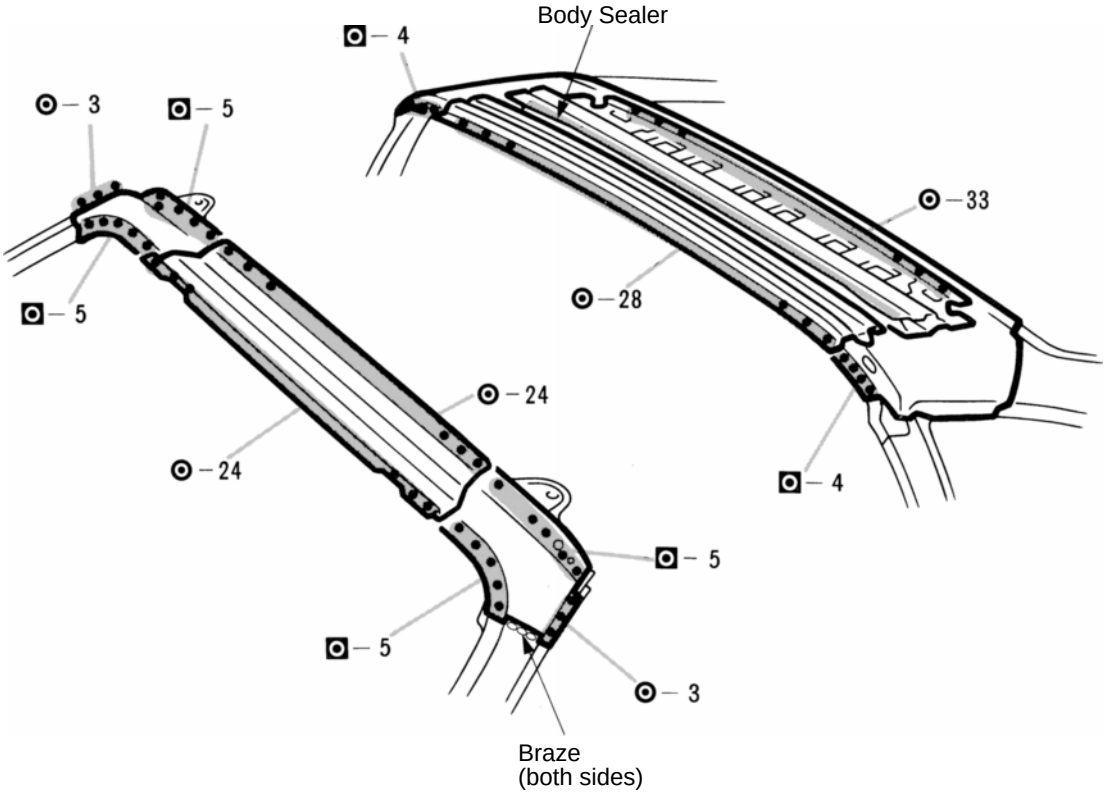

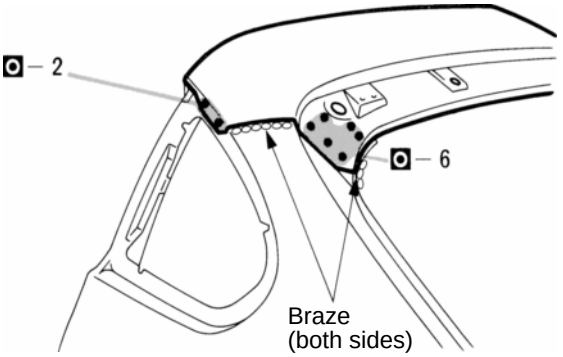

1. Before temporarily installing the new parts, apply body sealer to the windshield header panel, roof panel reinforcement and back door opening frame.

HINT:

1) Apply just enough sealer for the new parts to make contact.

2) For other sealing points, refer to Section AR.

2. Braze the front body pillar and quarter panel connection.

HINT: Before performing these operations, place a wet rag on the roof panel to protect it from damage.

ROOF PANEL (ASSY): Normal Roof

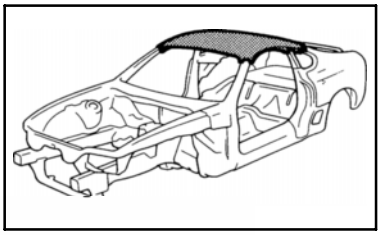

REMOVAL

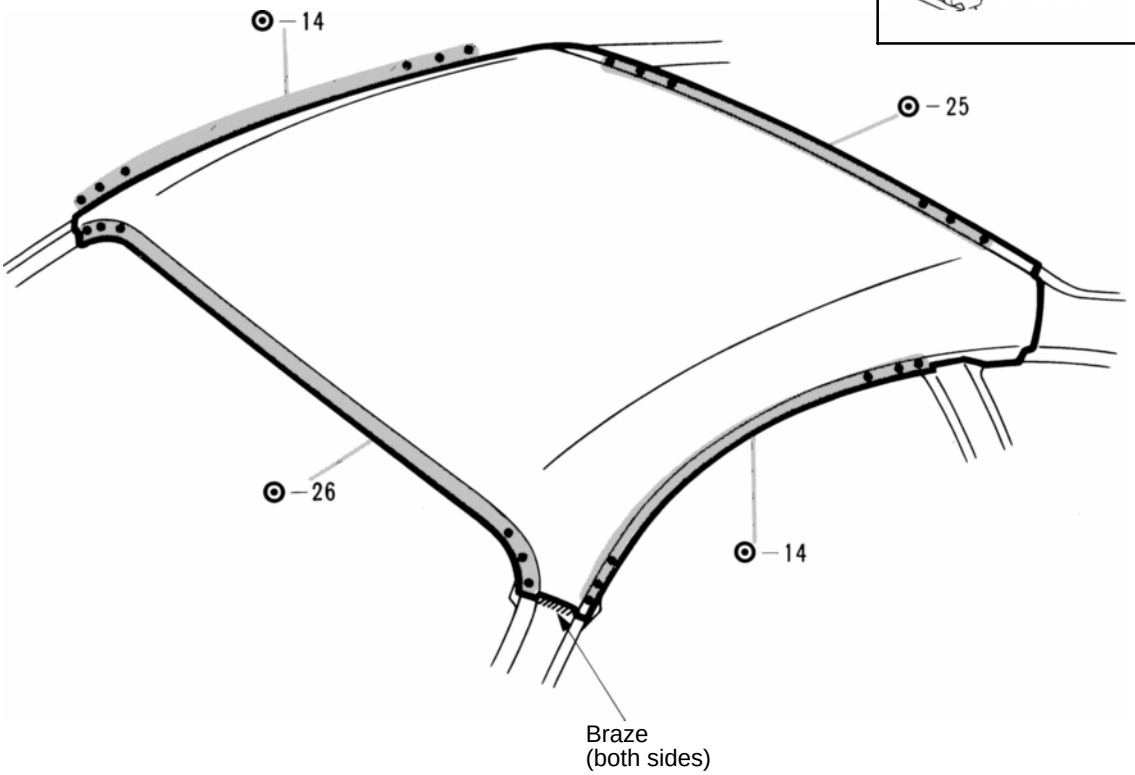

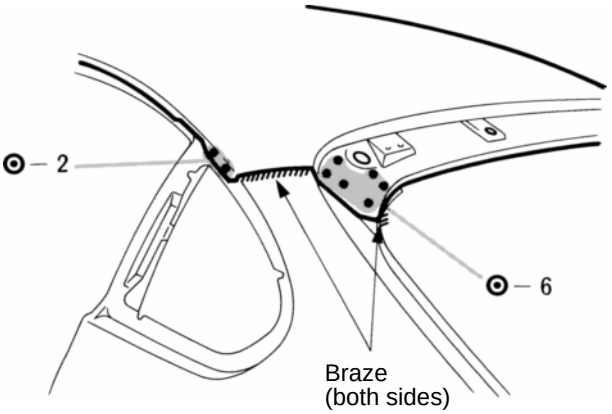

1. Heat the brazed area of the front body pillar and quarter panel and scrape off the brazing with a wire brush

HINT: Be careful not to overheat the pillar sides.

INSTALLATION

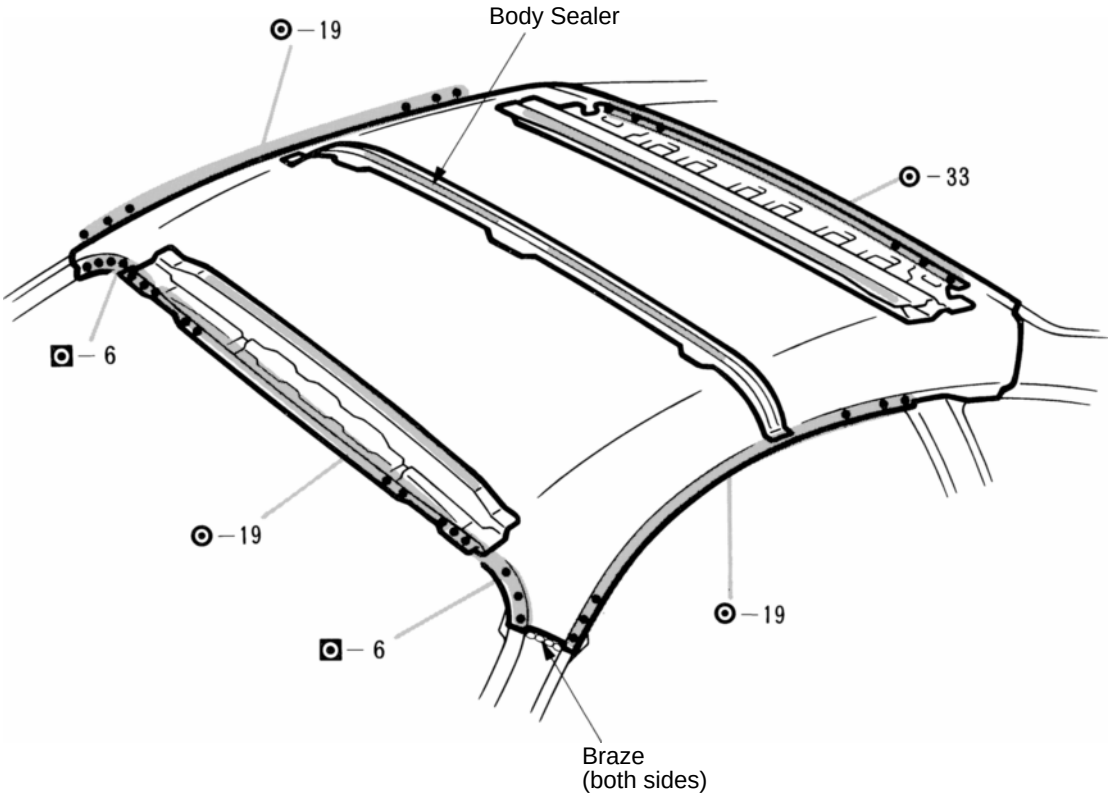

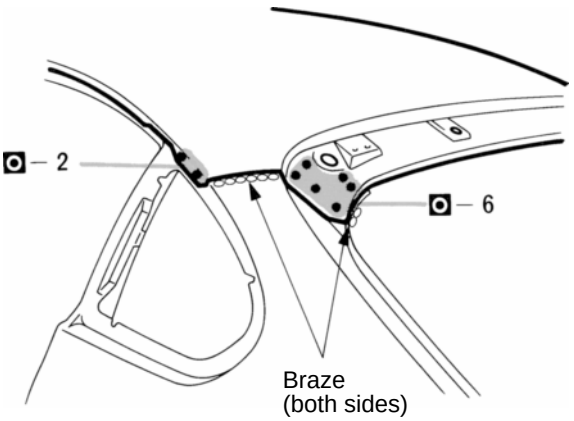

1. Before temporarily installing the new parts, apply body sealer to the windshield header panel, roof panel reinforcement and back door opening frame.

HINT:

1) Apply just enough sealer for the new parts to make contact.

2) For other sealing points, refer to Section AR.

2. Braze the front body pillar and quarter panel connection.

HINT: Before performing these operations, place a wet rag on the roof panel to protect it from damage.

RUST-RESIST ANT SHEET STEEL PARTS

Rust-Resistant Sheet Steel have zinc, tin or aluminum etc, plating over the base metal surface in order to improve the corrosion resistance of the sheet metal. For the vehicle's body panels, galvannealed sheet steel is widely used.
Body panel on TOYOTA models are made of two different galvannealed sheet steel. The ordinary galvannealed sheet steel has a zinc-iron alloy plating over the base metal surface. Zinc-iron alloy double-layer galvannealed sheet steel has zinc-iron alloy plating on both the outside and the back surface, plus a further iron-rich zinc-iron alloy plating which has good paint adhesion. These two galvannealed sheet steels are used selectively according to need.

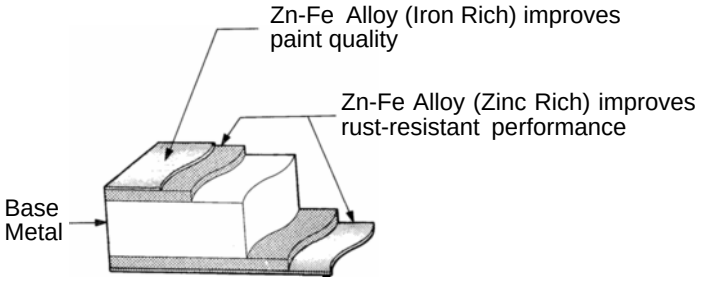

Excelite II

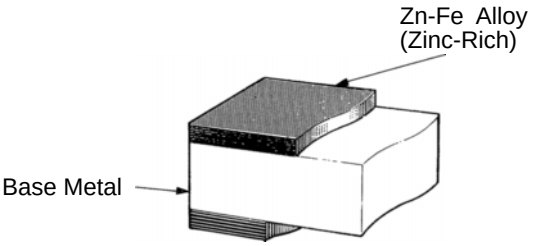

Galvannealed Sheet Steel

The handing of Rust-Resistant Sheet Steel is the same as for ordinary sheet steel, but the following should be observed.

1. Panel Welding: The paint as well as the zinc portion must be removed completely from the welding area to guarantee good welding integrity.
2. Anti-Rust Treatment: Since the zinc plating is lost after welding, anti-rust treatment of the welded area must be thoroughly performed (refer to section AR).

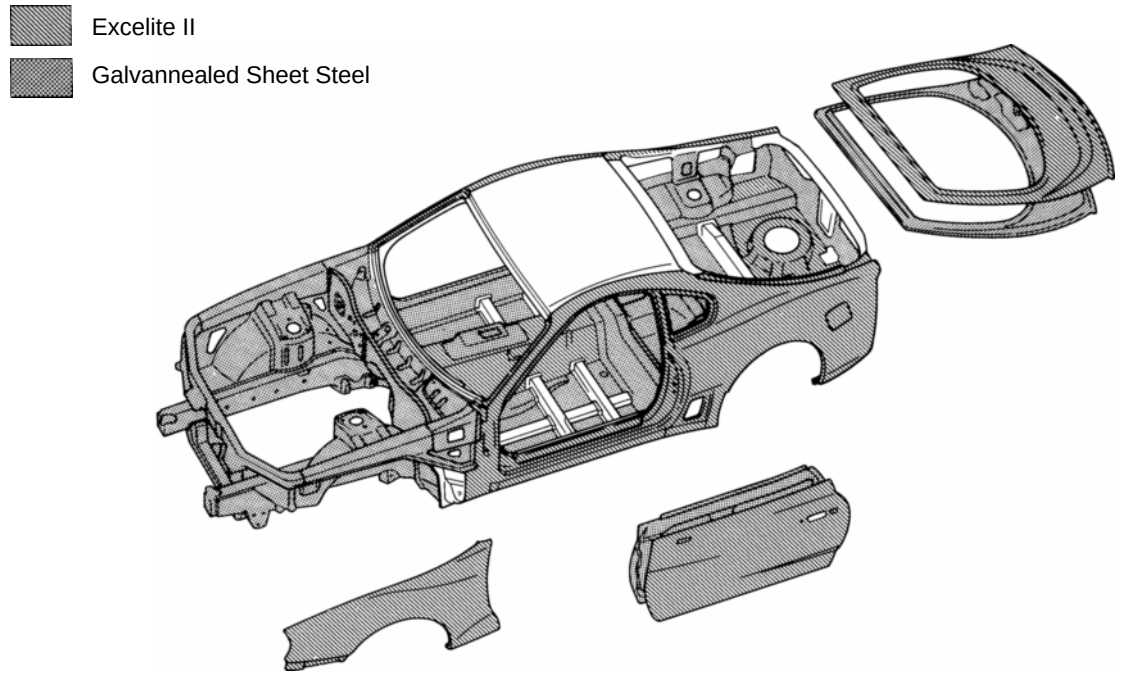

COLLISION REPAIR INFORMATION

FOR THE TOYOTA DEALER

TITLE: SCRATCH–RESISTANT PAINT

SECTION: REFINISH BULLETIN #78

MODELS: JAPAN PRODUCED VEHICLES (AS LISTED)

DATE: AUGUST 1997

Some Toyota models produced in Japan are finished with a Scratch–Resistant paint technology. This type of coating provides improved resistance to minor scratching. Vehicles produced with this type of coating can be identified by referring to the chart below and by the Vehicle Identification Number (VIN). The **first** character in the VIN of Japan–built vehicles is a “J” (J=Japan).

NOTE: U.S. manufactured vehicles do **not** use this type of paint technology.

Model	Color Code	Date of Introduction
Camry	202	August 1992
Celica	202	August 1991
MR2	202	December 1989
LandCruiser	202	December 1995
RAV4	202	January 1995
Supra	202	April 1993

Color code 202 (Black) is a single–stage paint as applied by the factory. During refinish work however, two–stage (basecoat/clearcoat) refinishing utilizing the appropriate materials is recommended.

REFINISH RECOMMENDATIONS

Refinish materials that provide similar scratch–resistant qualities have been developed by your respective paint vendor. Listed are the refinish materials (basecoat, clearcoat, reducer, hardener/activator) recommended by Toyota and your paint vendor for refinishing vehicles originally manufactured with scratch–resistant paint.

Manufacturer	Basecoat	Clearcoat	Reducer	Hardener/Activator
Akzo–Nobel	Autobase	Autocoat LV HS	Autocoat LV	Hardener HS–BSR
BASF	54/55 line	923–43	none	929–76
DuPont	Chroma–base	9700S	1085S	3575S
ICI Autocolor	2K/Aquabase	P190–639	P850–1692/3/4	P210–839
PPG	Deltron 2000 Global BC	DCU 2021 D894	DT–Series D807	DCX8 D897
Sherwin–Williams **Martin Senour**	Ultra–7000 Tec/Base	CC–830 HS 8895 HS	CCR–837 8879	UH–100 HS 8874
Spies–Hecker	Permacron 293/295	Permasolid 8030 HS	Permacron Series	3120 Super Hardener
Standox	Basecoat	2K HS Clear	2K Thinner	Scratch–Resistant

Check with your paint vendor for VOC compliance information and product availability.

Contact your paint vendor for additional information on application procedures, material availability and VOC compliant materials. For paint vendor technical service information telephone numbers, refer to Collision Repair Information Bulletin #77.

POLISHING TIPS

Follow paint vendor recommended baking or air dry times prior to sanding and polishing.

Since this type of paint technology resists scratches, it is important to understand that sanding and polishing to remove dirt nibs may require additional time.

Use a fine grit sand paper (2000–2500 grit) soaked in a soapy water solution for a minimum of 1–hour (overnight preferred) to prevent deep scratches and use polishing materials designed for urethane–type clearcoats.

SILENCER SHEET INSTALLATION AREAS

Thickness of Asphalt Sheet

. . . . . 1.5 mm (0.059 in.)

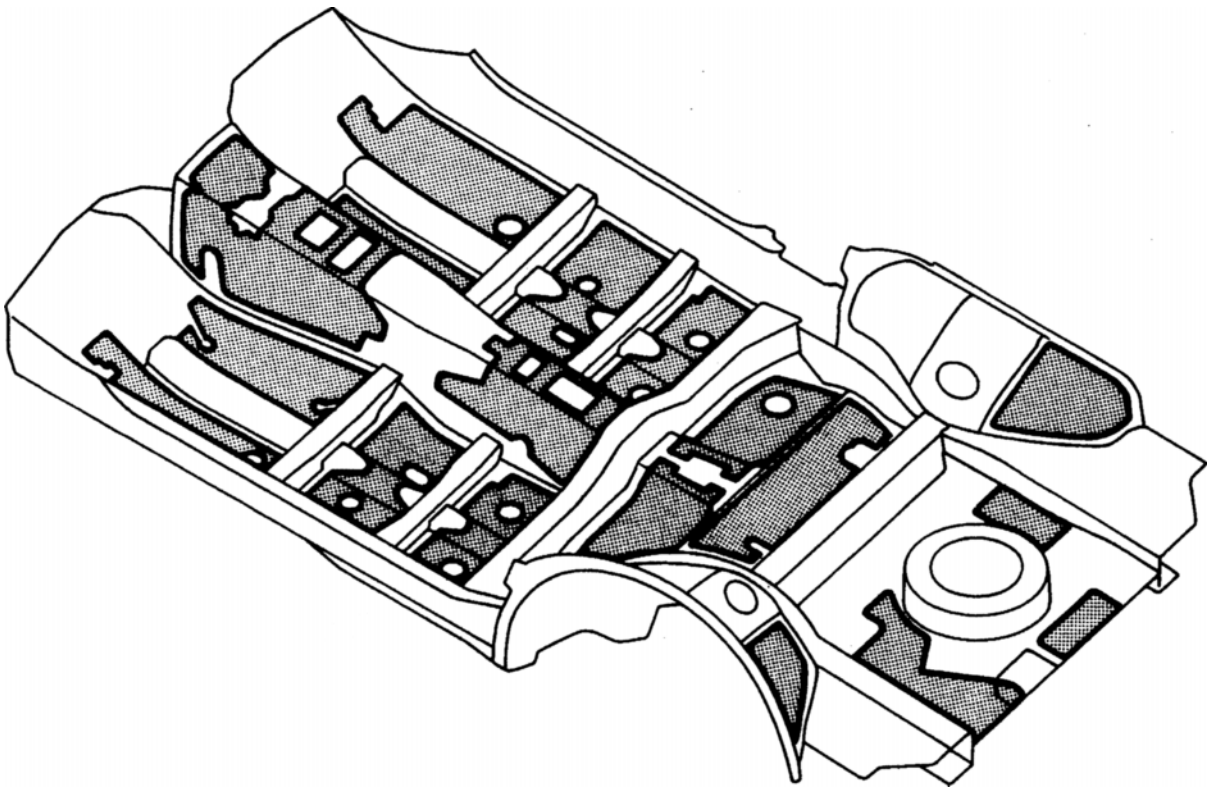

COLLISION REPAIR INFORMATION

FOR THE TOYOTA DEALER

TITLE: SRS AIRBAG COMPONENT REPLACEMENT

SECTION: ELECTRICAL BULLETIN #79

MODELS: ALL

DATE: AUGUST 1997

TOYOTA SUPPORTS TECHNICIAN PROFESSIONALISM THROUGH ASE CERTIFICATION

After an airbag has been deployed during a collision, it will be necessary to replace certain components of the airbag system. Technicians can identify these parts by using the attached matrix.

If the airbag does not deploy, yet the combination meter (airbag warning light) stays on for more that 10 seconds after the key is turned to the “ACC” or “ON” position, it is necessary to perform a diagnostic test. Always refer to the Toyota repair manual for the correct repair procedure.

The attached information includes:

- A matrix indicating components requiring replacement (pages 2–4).
- Parts replacement note (page 5).
- An example repair manual page outlining the diagnostic procedure available in each model specific repair manual (page 6).

Toyota recommends the use of electrical repair kit (P/N 00002–04200–01) for any wiring repairs. This kit includes a selection of numerous repair connectors, terminal ends, a repair procedures manual and special tools specific to Toyota. The ***replacement*** electrical wire and connector (from the wire harness to the front sensors) is P/N 82988–24010.

Toyota also offers a video package which shows the operation of the SRS airbag system (P/N 00401–42994).

CAUTION: SRS Airbag service work can be performed only AFTER 90 SECONDS from the time the ignition switch is turned to the “lock” position and the negative (–) terminal cable is disconnected from the battery.

NOTE: PLEASE ROUTE THIS BULLETIN TO YOUR COLLISION REPAIR CENTER MANAGER!

MODEL	YEAR	FRONT IMPACT SENSORS	CENTER AIR BAG ASSEMBLY	SPIRAL CABLE	STEERING WHEEL	STEERING WHEEL PAD	PASSENGER SIDE AIR BAG	INSTRUMENT PANEL	WIRE HARNESS
TERCEL	97	N/A	REPLACE	REPLACE	REPLACE	REPLACE	REPLACE	REPLACE	SEE NOTE 4
TERCEL	96	N/A	REPLACE	REPLACE	REPLACE	REPLACE	REPLACE	REPLACE	SEE NOTE 4
TERCEL	95	N/A	REPLACE	SEE NOTE 5	SEE NOTE 5	REPLACE	REPLACE	SEE NOTE 1	SEE NOTE 4
TERCEL	93-94	R&R BOTH	REPLACE	SEE NOTE 5	SEE NOTE 5	REPLACE	N/A	N/A	SEE NOTE 4
PASEO	97	N/A	REPLACE	REPLACE	REPLACE	REPLACE	REPLACE	REPLACE	SEE NOTE 4
PASEO	96	N/A	REPLACE	REPLACE	REPLACE	REPLACE	REPLACE	REPLACE	SEE NOTE 4
PASEO	93-95	R&R BOTH	REPLACE	SEE NOTE 5	SEE NOTE 5	REPLACE	N/A	N/A	SEE NOTE 4
PASEO	92	N/A	N/A	N/A	N/A	N/A	N/A	N/A	N/A
COROLLA	97	N/A	REPLACE	REPLACE	REPLACE	REPLACE	REPLACE	REPLACE	SEE NOTE 4
COROLLA	96	N/A	REPLACE	REPLACE	REPLACE	REPLACE	REPLACE	REPLACE	SEE NOTE 4
COROLLA	94-95	R&R BOTH	REPLACE	SEE NOTE 5	SEE NOTE5	REPLACE	REPLACE	SEE NOTE 3	SEE NOTE 4
COROLLA	93	R&R BOTH	REPLACE	SEE NOTE 5	SEE NOTE 5	N/A	N/A	N/A	N/A
CELICA	97	R&R BOTH	REPLACE	REPLACE	REPLACE	REPLACE	REPLACE	REPLACE	SEE NOTE 4
CELICA	96	R&R BOTH	REPLACE	REPLACE	REPLACE	REPLACE	REPLACE	REPLACE	SEE NOTE 4
CELICA	94-95	R&R BOTH	REPLACE	SEE NOTE 5	SEE NOTE 5	REPLACE	REPLACE	SEE NOTE 1	SEE NOTE 4
CELICA	90-93	R&R BOTH	SEE NOTE 6	SEE NOTE 5	SEE NOTE 5	REPLACE	N/A	REPLACE	SEE NOTE 4
MR2	94-95	R&R BOTH	REPLACE	SEE NOTE 5	SEE NOTE 5	REPLACE	REPLACE	SEE NOTE 2	SEE NOTE 4
MR2	91-93	R&R BOTH	SEE NOTE 6	SEE NOTE 5	SEE NOTE 5	REPLACE	N/A	N/A	SEE NOTE 4
CAMRY	97	N/A	REPLACE	REPLACE	REPLACE	REPLACE	REPLACE	REPLACE	SEE NOTE 4
CAMRY	96	R&R BOTH	REPLACE	REPLACE	REPLACE	REPLACE	REPLACE	REPLACE	SEE NOTE 4
CAMRY	94-95	R&R BOTH	REPLACE	SEE NOTE 5	SEE NOTE 5	REPLACE	REPLACE	SEE NOTE 2	SEE NOTE 4

MODEL	YEAR	FRONT IMPACT SENSORS	CENTER AIR BAG ASSEMBLY	SPIRAL CABLE	STEERING WHEEL	STEERING WHEEL PAD	PASSENGER SIDE AIR BAG	INSTRUMENT PANEL	WIRE HARNESS
CAMRY	92-93	R&R BOTH	REPLACE	SEE NOTE 5	SEE NOTE 5	REPLACE	N/A	N/A	SEE NOTE 4
SUPRA	97	N/A	REPLACE	REPLACE	REPLACE	REPLACE	REPLACE	REPLACE	SEE NOTE 4
SUPRA	96	R&R BOTH	REPLACE	REPLACE	REPLACE	REPLACE	REPLACE	REPLACE	SEE NOTE 4
SUPRA	93-95	R&R BOTH	REPLACE	SEE NOTE 5	SEE NOTE 5	REPLACE	REPLACE	REPLACE	SEE NOTE 4
SUPRA	90-92	R&R BOTH	SEE NOTE 6	SEE NOTE 5	SEE NOTE 5	REPLACE	REPLACE	N/A	SEE NOTE 4
AVALON	97	N/A	REPLACE	REPLACE	REPLACE	REPLACE	REPLACE	REPLACE	SEE NOTE 4A
AVALON	96	N/A	REPLACE	REPLACE	REPLACE	REPLACE	REPLACE	REPLACE	SEE NOTE 4A
AVALON	95	N/A	REPLACE	SEE NOTE 5	SEE NOTE 5	REPLACE	REPLACE	SEE NOTE 3A	SEE NOTE 4A
PREVIA	97	N/A	REPLACE	REPLACE	REPLACE	REPLACE	REPLACE	REPLACE	SEE NOTE 4A
PREVIA	96	N/A	REPLACE	REPLACE	REPLACE	REPLACE	REPLACE	REPLACE	SEE NOTE 4A
PREVIA	94-95	R&R BOTH	REPLACE	SEE NOTE 5	SEE NOTE 5	REPLACE	REPLACE	SEE NOTE 3	SEE NOTE 4
PREVIA	92-93	R&R BOTH	REPLACE	SEE NOTE 5	SEE NOTE 5	REPLACE	REPLACE		SEE NOTE 4
4 RUNNER	97	N/A	REPLACE	REPLACE	REPLACE	REPLACE	REPLACE	REPLACE	SEE NOTE 4A
4 RUNNER	96	N/A	REPLACE	REPLACE	REPLACE	REPLACE	REPLACE	REPLACE	SEE NOTE 4A
4 RUNNER	90-95	N/A	N/A	N/A	N/A	N/A	N/A	N/A	N/A
LAND CRUISER	97	N/A	REPLACE	REPLACE	REPLACE	REPLACE	REPLACE	REPLACE	SEE NOTE 4A
LAND CRUISER	96	N/A	REPLACE	REPLACE	REPLACE	REPLACE	REPLACE	REPLACE	SEE NOTE 4A
LAND CRUISER	95	N/A	REPLACE	SEE NOTE 5	SEE NOTE 5	REPLACE	REPLACE	SEE NOTE 3A	SEE NOTE 4A
T100	97	R&R BOTH	REPLACE	REPLACE	REPLACE	REPLACE	REPLACE	REPLACE	SEE NOTE 4
T100	96	R&R BOTH	REPLACE	REPLACE	REPLACE	REPLACE	REPLACE	REPLACE	SEE NOTE 4

MODEL	YEAR	FRONT IMPACT SENSORS	CENTER AIR BAG ASSEMBLY	SPIRAL CABLE	STEERING WHEEL	STEERING WHEEL PAD	PASSENGER SIDE AIR BAG	INSTRUMENT PANEL	WIRE HARNESS
T-100	94-95	R&R BOTH	REPLACE	SEE NOTE 5	SEE NOTE 5	REPLACE	REPLACE	N/A	SEE NOTE 4
TACOMA	97	N/A	REPLACE	REPLACE	REPLACE	REPLACE	REPLACE	REPLACE	SEE NOTE 4B
TACOMA	96	N/A	REPLACE	REPLACE	REPLACE	REPLACE	REPLACE	REPLACE	SEE NOTE 4B
TACOMA	95	N/A	REPLACE	SEE NOTE 5	SEE NOTE 5	REPLACE	N/A	N/A	SEE NOTE 4B
RAV4	97	N/A	REPLACE	REPLACE	REPLACE	REPLACE	REPLACE	REPLACE	SEE NOTE 4
RAV4	96	N/A	REPLACE	REPLACE	REPLACE	REPLACE	REPLACE	REPLACE	SEE NOTE 4

Component Replacement Notes

Note 1 – Replace the following items:
- Instrument panel
- Center console bracket support

Note 2 – Replace the following items if deformed:
- Instrument panel
- Instrument panel reinforcement
- Glove compartment
- Glove compartment door

Note 3 – Replace the following items:
- Instrument panel reinforcement
- Glove compartment
- Glove compartment door

Note 3a – Replace the following items:
- Instrument panel
- Instrument panel reinforcement
- Glove compartment door

Note 4 – If the SRS wire harness assembly is damaged:
- Use a repair wire specially designed for use in the SRS airbag system at the front sensor (P/N 82988–24010).
  OR
- Replace the entire wire harness assembly.

Note 4a – Replace wire harness if damaged.
- Repair only if wire harness connector is damaged.

Note 4b – Replace wire harness if damaged.

Note 5 – Replace the following items if deformed:
- Steering wheel
- Spiral cable

Note 6 – Replace center airbag sensor assembly if:
- Center airbag sensor assembly has been found faulty in troubleshooting
- Center airbag sensor assembly has been found faulty during the following checks:
  1. Deformation of the bracket or case
  2. Vinyl seal broken
  3. Damage to connector
- Center airbag sensor assembly has been dropped.

This is an example from a Toyota Repair Manual. Always refer to the repair manual applicable to the model and year vehicle you are diagnosing.

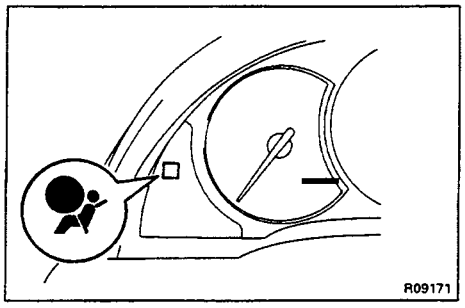

DIAGNOSIS INSPECTION

SRS warning light check

(a) Turn the ignition switch to ACC or ON and check that the SRS warning light lights up.

(b) Check that the SRS warning light goes out after approx. 6 seconds.

HINT:

- When the ignition switch is at ACC or ON and the SRS warning light remains on or flashes, the center airbag sensor assembly has detected a malfunction code.
- If, after approx. 6 seconds have elapsed, the SRS warning light sometimes lights up or the SRS warning light lights up even when the ignition switch is OFF, a short in the SRS warning light circuit can be considered likely. Proceed to "SRS warning light system malfunction" on page RS-69, 70.

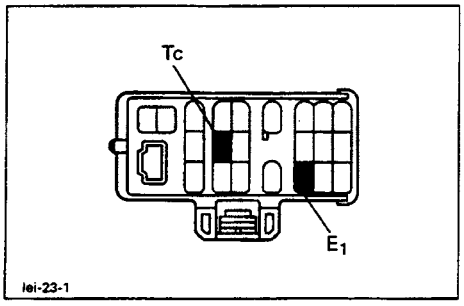

DTC check

Using diagnosis check wire:

1. OUTPUT DTC

(a) Turn the ignition switch to ACC or ON position and wait approx. 20 seconds.

(b) Using SST, connect terminals Tc and E1 of the DLC1.

SST 09843-18020

NOTICE: Never make a mistake with the terminal connection position as this will cause a malfunction.

COLLISION REPAIR INFORMATION

FOR THE TOYOTA DEALER

TITLE: SRS AIRBAG COMPONENT REPLACEMENT

SECTION: ELECTRICAL BULLETIN #83

MODELS: ALL

DATE: MAY 1998

TOYOTA SUPPORTS TECHNICIAN PROFESSIONALISM
ASE
THROUGH ASE CERTIFICATION

After an airbag has been deployed during a collision, it will be necessary to replace certain components of the SRS system. Technicians can identify these parts by using the attached matrix.

If, after the vehicle has been completely repaired, the airbag warning light stays on for more than 6 seconds while the key is turned to the “ACC” or “ON” position, it is necessary to perform a diagnostic test. Always refer to the model–specific Toyota Repair Manual for the correct repair procedure.

The attached information includes:

- A matrix indicating components requiring replacement (page 3).
- Parts replacement notes (page 4).
- An example Repair Manual page outlining the diagnostic procedure available in each model–specific Repair Manual (page 2).

On some vehicles the front sensors may be replaced. Please refer to the model–specific repair manual concerning front airbag sensor replacement requirements before performing this repair. Three part numbers are available for ***replacement*** electrical wire and connectors from the wire harness to the front SRS sensors. They are P/N 82988–24010, 82988–50010, and 82988–33010.

Toyota also offers a video package which outlines the operation of the SRS airbag system (P/N 00401–42994).

NOTE: PLEASE ROUTE THIS BULLETIN TO YOUR COLLISION REPAIR CENTER MANAGER!

CAUTION: SRS Airbag service work can be performed only AFTER 90 SECONDS from the time the ignition switch is turned to the "lock" position and the negative (–) terminal cable is disconnected from the battery.

This is an example from a Toyota Repair Manual. Always refer to the repair manual applicable to the model and year of the vehicle you are diagnosing.

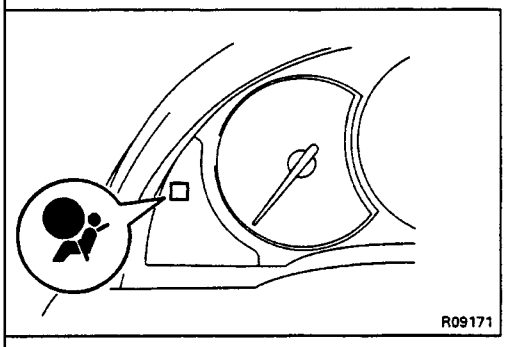

DIAGNOSIS INSPECTION

SRS warning light check

(a) Turn the ignition switch to ACC or ON and check that the SRS warning light lights up.

(b) Check that the SRS warning light goes out after approx. 6 seconds.

HINT:

- When the ignition switch is at ACC or ON and the SRS warning light remains on or flashes, the center airbag sensor assembly has detected a malfunction code.
- If, after approx. 6 seconds have elapsed, the SRS warning light sometimes lights up or the SRS warning light lights up even when the ignition switch is OFF, a short in the SRS warning light circuit can be considered likely. Proceed to "SRS warning light system malfunction" on page RS-69, 70.

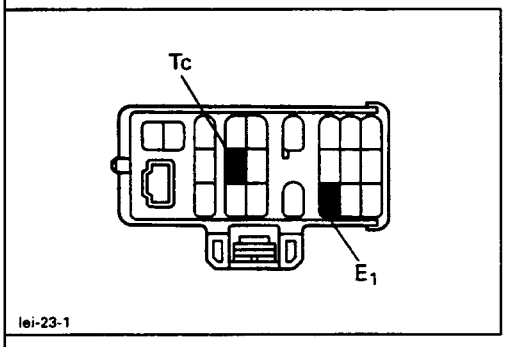

DTC check

Using diagnosis check wire:

1. OUTPUT DTC

(a) Turn the ignition switch to ACC or ON position and wait approx. 20 seconds.

(b) Using SST, connect terminals Tc and E1 of the DLC1.

SST 09843-18020

NOTICE: Never make a mistake with the terminal connection position as this will cause a malfunction.

MODEL	YEAR	STEERING WHEEL PAD	SPIRAL CABLE	STEERING WHEEL	PASSENGER AIRBAG	INSTRUMENT PANEL	FR. IMPACT SENSORS (BOTH)	AIRBAG SENSOR ASSEMBLY	WIRE HARNESS	SIDE IMPACT AIRBAGS	SIDE IMPACT SENSORS	SEATBELT PRETENSIONER
TERCEL	93-94	X	*4	*4			X	X	*3			
	95	X	*4	*4	X	*1		X	*3A			
	96-97	X	*4	*4	X	*2a		X	*3A			
	98	X	*4	*4	X	*2a		X	*3A			X
PASEO	93-95	X	*4	*4			X	X	*3			
	96-97	X	*4	*4	X	*2a		X	*3A			
COROLLA	93	X	*4	*4			X	X	*3			
	94-95	X	*4	*4	X	*2	X	X	*3			
	96-97	X	*4	*4	X	*2a		X	*3A			
	98	X	*4	*4	X	*2a	X	X	*3A	*6	*6	X
CELICA	90-93	X	*4	*4			X	*5	*3			
	94-95	X	*4	*4	X	*1	X	X	*3			
	96-97	X	*4	*4	X	*2a	X	X	*3			
	98	X	*4	*4	X	*2		X	*3A			
CAMRY	92-93	X	*4	*4			X	X	*3			
	94-95	X	*4	*4	X	*2	X	X	*3			
	96	X	*4	*4	X	*2a	X	X	*3			
	97	X	*4	*4	X	*2a		X	*3A			
	98	X	*4	*4	X	*2a		X	*3A	*6	*6	X
SUPRA	90-92	X	*4	*4			X	*5	*3			
	93-96	X	*4	*4	X	*2a	X	X	*3			
	97-98	X	*4	*4	X	*2		X	*3A			
MR2	91-93	X	*4	*4			X	*5	*3			
	94-95	X	*4	*4	X	*2	X	X	*3			
AVALON	95	X	*4	*4	X	*2		X	*3A			
	96-97	X	*4	*4	X	*2a		X	*3A			
	98	X	*4	*4	X	*2		X	*3A	*6	*6	X
PREVIA	92-93	X	*4	*4			X	X	*3			
	94-95	X	*4	*4	X	*2	X	X	*3			
	96-97	X	*4	*4	X	*2a		X	*3A			
SIENNA	98	X	*4	*4	X	*2	X	X	*3A			X
RAV4	96-97	X	*4	*4	X	*2a		X	*3A			
	98	X	*4	*4	X	*2	X	X	*3			X
T100	94-98	X	*4	*4			X	X	*3			
TACOMA	95-96	X	*4	*4				X	*3A			
	97	X	*4	*4	X	*2		X	*3A			
	98	X	*4	*4	X / *7	*2		X	*3A			
4 RUNNER	96-98	X	*4	*4	X	*2		X	*3A			
LAND CRUISER	95-97	X	*4	*4	X	*2		X	*3A			
	98	X	*4	*4	X	*2	X	X	*3A			X

Component Replacement Notes

Note 1 – Visually inspect and replace the following items if deformed:
Instrument panel and center console bracket support

Note 2 – Visually inspect and replace the following items if deformed:

Instrument panel and Instrument panel reinforcement

Glove compartment and glove compartment door

Note 2a – Same as note 2 without involving the glove compartment.

Note 3 – If the SRS wire harness is damaged only at the connectors to the front sensors:
Use a repair wire specially designed for use in the SRS airbag system at the front sensor (PN 82988–24010/50010/33010).
OR

Replace the entire wire harness assembly.

Note 3a – Replace the entire wire harness if damaged or has been found to be faulty during troubleshooting.

Note 4 – Replace the following items if deformed or if diagnostic tests show a fault:
Steering wheel (If the horn button contact plate has been deformed, never attempt to repair it–always replace the steering wheel).

Spiral cable

Note 5 – Replace center airbag sensor assembly if:
Center airbag sensor assembly has been found faulty in troubleshooting.

Center airbag sensor assembly shows evidence of the following:

1. Deformation of the bracket or case
2. Vinyl seal broken
3. Damage to connector

Center airbag sensor assembly has been dropped.

Note 6 – Replace side impact sensors and side airbag assembly with seat cover if deployed. Side airbag circuits are independent from each other, and one side may deploy while the other does not.

Note 7 – 1998 Tacoma is equipped with a passenger airbag cutoff switch. If the switch is "OFF" when impact occurs, replace the switch. If the switch is in the "ON" position when impact occurs, and the passenger airbag deploys, check the switch as directed by the Repair Manual.

COLLISION REPAIR INFORMATION

FOR THE TOYOTA DEALER

TITLE: SRS AIRBAG COMPONENT REPLACEMENT

SECTION: ELECTRICAL BULLETIN #79

MODELS: ALL

DATE: AUGUST 1997

TOYOTA SUPPORTS TECHNICIAN PROFESSIONALISM THROUGH ASE CERTIFICATION

After an airbag has been deployed during a collision, it will be necessary to replace certain components of the airbag system. Technicians can identify these parts by using the attached matrix.

If the airbag does not deploy, yet the combination meter (airbag warning light) stays on for more that 10 seconds after the key is turned to the “ACC” or “ON” position, it is necessary to perform a diagnostic test. Always refer to the Toyota repair manual for the correct repair procedure.

The attached information includes:

- A matrix indicating components requiring replacement (pages 2–4).
- Parts replacement note (page 5).
- An example repair manual page outlining the diagnostic procedure available in each model specific repair manual (page 6).

Toyota recommends the use of electrical repair kit (P/N 00002–04200–01) for any wiring repairs. This kit includes a selection of numerous repair connectors, terminal ends, a repair procedures manual and special tools specific to Toyota. The ***replacement*** electrical wire and connector (from the wire harness to the front sensors) is P/N 82988–24010.

Toyota also offers a video package which shows the operation of the SRS airbag system (P/N 00401–42994).

CAUTION: SRS Airbag service work can be performed only AFTER 90 SECONDS from the time the ignition switch is turned to the “lock” position and the negative (–) terminal cable is disconnected from the battery.

NOTE: PLEASE ROUTE THIS BULLETIN TO YOUR COLLISION REPAIR CENTER MANAGER!

MODEL	YEAR	FRONT IMPACT SENSORS	CENTER AIR BAG ASSEMBLY	SPIRAL CABLE	STEERING WHEEL	STEERING WHEEL PAD	PASSENGER SIDE AIR BAG	INSTRUMENT PANEL	WIRE HARNESS
TERCEL	97	N/A	REPLACE	REPLACE	REPLACE	REPLACE	REPLACE	REPLACE	SEE NOTE 4
TERCEL	96	N/A	REPLACE	REPLACE	REPLACE	REPLACE	REPLACE	REPLACE	SEE NOTE 4
TERCEL	95	N/A	REPLACE	SEE NOTE 5	SEE NOTE 5	REPLACE	REPLACE	SEE NOTE 1	SEE NOTE 4
TERCEL	93-94	R&R BOTH	REPLACE	SEE NOTE 5	SEE NOTE 5	REPLACE	N/A	N/A	SEE NOTE 4
PASEO	97	N/A	REPLACE	REPLACE	REPLACE	REPLACE	REPLACE	REPLACE	SEE NOTE 4
PASEO	96	N/A	REPLACE	REPLACE	REPLACE	REPLACE	REPLACE	REPLACE	SEE NOTE 4
PASEO	93-95	R&R BOTH	REPLACE	SEE NOTE 5	SEE NOTE 5	REPLACE	N/A	N/A	SEE NOTE 4
PASEO	92	N/A	N/A	N/A	N/A	N/A	N/A	N/A	N/A
COROLLA	97	N/A	REPLACE	REPLACE	REPLACE	REPLACE	REPLACE	REPLACE	SEE NOTE 4
COROLLA	96	N/A	REPLACE	REPLACE	REPLACE	REPLACE	REPLACE	REPLACE	SEE NOTE 4
COROLLA	94-95	R&R BOTH	REPLACE	SEE NOTE 5	SEE NOTE5	REPLACE	REPLACE	SEE NOTE 3	SEE NOTE 4
COROLLA	93	R&R BOTH	REPLACE	SEE NOTE 5	SEE NOTE 5	N/A	N/A	N/A	N/A
CELICA	97	R&R BOTH	REPLACE	REPLACE	REPLACE	REPLACE	REPLACE	REPLACE	SEE NOTE 4
CELICA	96	R&R BOTH	REPLACE	REPLACE	REPLACE	REPLACE	REPLACE	REPLACE	SEE NOTE 4
CELICA	94-95	R&R BOTH	REPLACE	SEE NOTE 5	SEE NOTE 5	REPLACE	REPLACE	SEE NOTE 1	SEE NOTE 4
CELICA	90-93	R&R BOTH	SEE NOTE 6	SEE NOTE 5	SEE NOTE 5	REPLACE	N/A	REPLACE	SEE NOTE 4
MR2	94-95	R&R BOTH	REPLACE	SEE NOTE 5	SEE NOTE 5	REPLACE	REPLACE	SEE NOTE 2	SEE NOTE 4
MR2	91-93	R&R BOTH	SEE NOTE 6	SEE NOTE 5	SEE NOTE 5	REPLACE	N/A	N/A	SEE NOTE 4
CAMRY	97	N/A	REPLACE	REPLACE	REPLACE	REPLACE	REPLACE	REPLACE	SEE NOTE 4
CAMRY	96	R&R BOTH	REPLACE	REPLACE	REPLACE	REPLACE	REPLACE	REPLACE	SEE NOTE 4
CAMRY	94-95	R&R BOTH	REPLACE	SEE NOTE 5	SEE NOTE 5	REPLACE	REPLACE	SEE NOTE 2	SEE NOTE 4

MODEL	YEAR	FRONT IMPACT SENSORS	CENTER AIR BAG ASSEMBLY	SPIRAL CABLE	STEERING WHEEL	STEERING WHEEL PAD	PASSENGER SIDE AIR BAG	INSTRUMENT PANEL	WIRE HARNESS
CAMRY	92-93	R&R BOTH	REPLACE	SEE NOTE 5	SEE NOTE 5	REPLACE	N/A	N/A	SEE NOTE 4
SUPRA	97	N/A	REPLACE	REPLACE	REPLACE	REPLACE	REPLACE	REPLACE	SEE NOTE 4
SUPRA	96	R&R BOTH	REPLACE	REPLACE	REPLACE	REPLACE	REPLACE	REPLACE	SEE NOTE 4
SUPRA	93-95	R&R BOTH	REPLACE	SEE NOTE 5	SEE NOTE 5	REPLACE	REPLACE	REPLACE	SEE NOTE 4
SUPRA	90-92	R&R BOTH	SEE NOTE 6	SEE NOTE 5	SEE NOTE 5	REPLACE	REPLACE	N/A	SEE NOTE 4
AVALON	97	N/A	REPLACE	REPLACE	REPLACE	REPLACE	REPLACE	REPLACE	SEE NOTE 4A
AVALON	96	N/A	REPLACE	REPLACE	REPLACE	REPLACE	REPLACE	REPLACE	SEE NOTE 4A
AVALON	95	N/A	REPLACE	SEE NOTE 5	SEE NOTE 5	REPLACE	REPLACE	SEE NOTE 3A	SEE NOTE 4A
PREVIA	97	N/A	REPLACE	REPLACE	REPLACE	REPLACE	REPLACE	REPLACE	SEE NOTE 4A
PREVIA	96	N/A	REPLACE	REPLACE	REPLACE	REPLACE	REPLACE	REPLACE	SEE NOTE 4A
PREVIA	94-95	R&R BOTH	REPLACE	SEE NOTE 5	SEE NOTE 5	REPLACE	REPLACE	SEE NOTE 3	SEE NOTE 4
PREVIA	92-93	R&R BOTH	REPLACE	SEE NOTE 5	SEE NOTE 5	REPLACE	REPLACE		SEE NOTE 4
4 RUNNER	97	N/A	REPLACE	REPLACE	REPLACE	REPLACE	REPLACE	REPLACE	SEE NOTE 4A
4 RUNNER	96	N/A	REPLACE	REPLACE	REPLACE	REPLACE	REPLACE	REPLACE	SEE NOTE 4A
4 RUNNER	90-95	N/A	N/A	N/A	N/A	N/A	N/A	N/A	N/A
LAND CRUISER	97	N/A	REPLACE	REPLACE	REPLACE	REPLACE	REPLACE	REPLACE	SEE NOTE 4A
LAND CRUISER	96	N/A	REPLACE	REPLACE	REPLACE	REPLACE	REPLACE	REPLACE	SEE NOTE 4A
LAND CRUISER	95	N/A	REPLACE	SEE NOTE 5	SEE NOTE 5	REPLACE	REPLACE	SEE NOTE 3A	SEE NOTE 4A
T100	97	R&R BOTH	REPLACE	REPLACE	REPLACE	REPLACE	REPLACE	REPLACE	SEE NOTE 4
T100	96	R&R BOTH	REPLACE	REPLACE	REPLACE	REPLACE	REPLACE	REPLACE	SEE NOTE 4

MODEL	YEAR	FRONT IMPACT SENSORS	CENTER AIR BAG ASSEMBLY	SPIRAL CABLE	STEERING WHEEL	STEERING WHEEL PAD	PASSENGER SIDE AIR BAG	INSTRUMENT PANEL	WIRE HARNESS
T-100	94-95	R&R BOTH	REPLACE	SEE NOTE 5	SEE NOTE 5	REPLACE	REPLACE	N/A	SEE NOTE 4
TACOMA	97	N/A	REPLACE	REPLACE	REPLACE	REPLACE	REPLACE	REPLACE	SEE NOTE 4B
TACOMA	96	N/A	REPLACE	REPLACE	REPLACE	REPLACE	REPLACE	REPLACE	SEE NOTE 4B
TACOMA	95	N/A	REPLACE	SEE NOTE 5	SEE NOTE 5	REPLACE	N/A	N/A	SEE NOTE 4B
RAV4	97	N/A	REPLACE	REPLACE	REPLACE	REPLACE	REPLACE	REPLACE	SEE NOTE 4
RAV4	96	N/A	REPLACE	REPLACE	REPLACE	REPLACE	REPLACE	REPLACE	SEE NOTE 4

Component Replacement Notes

Note 1 – Replace the following items:
- Instrument panel
- Center console bracket support

Note 2 – Replace the following items if deformed:
- Instrument panel
- Instrument panel reinforcement
- Glove compartment
- Glove compartment door

Note 3 – Replace the following items:
- Instrument panel reinforcement
- Glove compartment
- Glove compartment door

Note 3a – Replace the following items:
- Instrument panel
- Instrument panel reinforcement
- Glove compartment door

Note 4 – If the SRS wire harness assembly is damaged:
- Use a repair wire specially designed for use in the SRS airbag system at the front sensor (P/N 82988–24010).
  OR
- Replace the entire wire harness assembly.

Note 4a – Replace wire harness if damaged.
- Repair only if wire harness connector is damaged.

Note 4b – Replace wire harness if damaged.

Note 5 – Replace the following items if deformed:
- Steering wheel
- Spiral cable

Note 6 – Replace center airbag sensor assembly if:
- Center airbag sensor assembly has been found faulty in troubleshooting
- Center airbag sensor assembly has been found faulty during the following checks:
  1. Deformation of the bracket or case
  2. Vinyl seal broken
  3. Damage to connector
- Center airbag sensor assembly has been dropped.

This is an example from a Toyota Repair Manual. Always refer to the repair manual applicable to the model and year vehicle you are diagnosing.

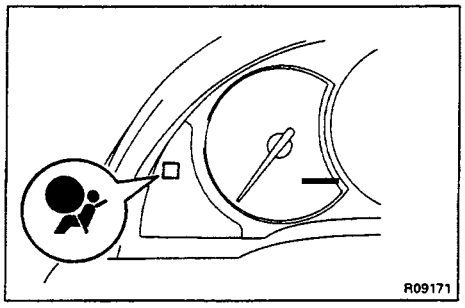

DIAGNOSIS INSPECTION

SRS warning light check

(a) Turn the ignition switch to ACC or ON and check that the SRS warning light lights up.

(b) Check that the SRS warning light goes out after approx. 6 seconds.

HINT:

- When the ignition switch is at ACC or ON and the SRS warning light remains on or flashes, the center airbag sensor assembly has detected a malfunction code.
- If, after approx. 6 seconds have elapsed, the SRS warning light sometimes lights up or the SRS warning light lights up even when the ignition switch is OFF, a short in the SRS warning light circuit can be considered likely. Proceed to "SRS warning light system malfunction" on page RS-69, 70.

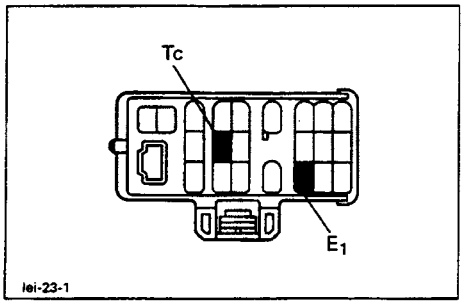

DTC check

Using diagnosis check wire:

1. OUTPUT DTC

(a) Turn the ignition switch to ACC or ON position and wait approx. 20 seconds.

(b) Using SST, connect terminals Tc and E1 of the DLC1.

SST 09843-18020

NOTICE: Never make a mistake with the terminal connection position as this will cause a malfunction.

STANDARD BODY MARKS

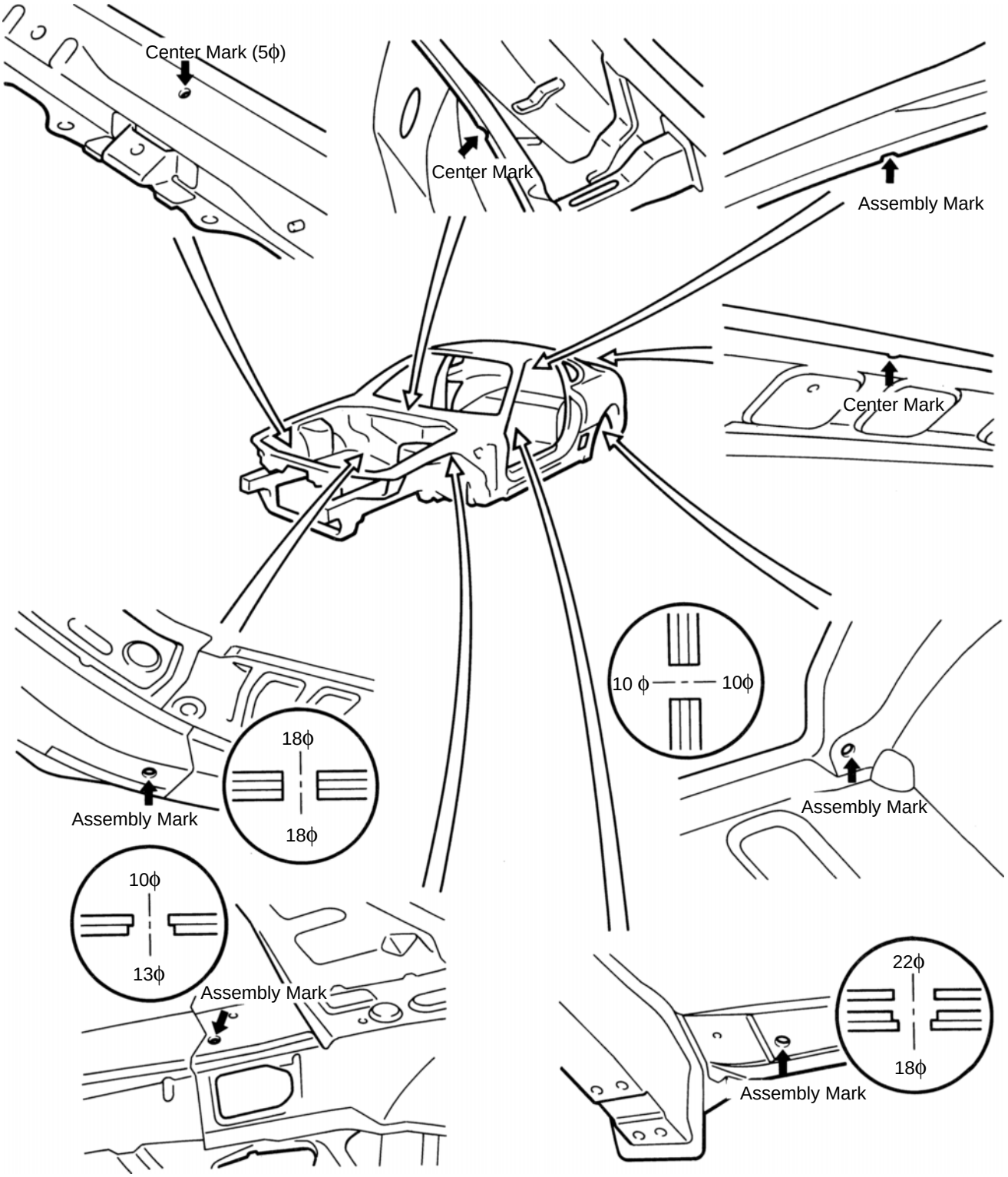

mm	in.
5	0.20
10	0.39
13	0.51
18	0.71
22	0.86

COLLISION REPAIR INFORMATION

FOR THE TOYOTA DEALER

TITLE: TOYOTA COLLISION REPAIR & REFINISH SERVICE PUBLICATIONS

SECTION: GENERAL INFORMATION BULLETIN #75

MODELS: ALL

DATE: JANUARY 1997

TOYOTA SUPPORTS TECHNICIAN PROFESSIONALISM THROUGH ASE CERTIFICATION

Toyota Collision Repair and Refinish Service Publications are an integral part of the Toyota philosophy of “fix it right the first time”. This detailed repair information is designed to speed and simplify repair operations and improve the quality of each repair. For ordering information, please refer to page 5 of this bulletin.

COLLISION REPAIR MANUALS

- Cutting and welding operations
- Body component diagrams and illustrations
- Body panel replacement
- Body dimensions
- Anti–rust treatment
- SRS handling precautions
- Electronic control unit (ECU) locations
- Plastic body part identification

Model	Year	Part Number	Price
AVALON			
Collision Repair Manual	1997–95	00400–BR046	$20.00
CAMRY			
Collision Repair Manual	1997	00400–BR062	20.00
Collision Repair Manual	1996–92	00400–BR032	9.00
Collision Repair Manual–Coupe	1996–94	00400–BR043	9.00
Collision Repair Manual–Wagon	1996–92	00400–BR035	9.00
Collision Repair Manual	1991–87	00400–BRM01–0E	8.95
Collision Repair Manual	1986–83	00400–36433–E	6.95
CELICA			
Collision Repair Manual–Convertible	1997–94	00400–BR048	15.00
Collision Repair Manual	1997–94	00400–BR044	15.00
Collision Repair Manual	1993–90	00400–BR022	6.95
Collision Repair Manual	1989–86	00400–BRM00–1E	8.95
COROLLA			
Collision Repair Manual	1997–93	00400–BR038	15.00
Collision Repair Manual–Sedan	1992–87	00400–BR012	6.95
Collision Repair Manual–All Trac	1992–88	00400–BR014	4.95
Collision Repair Manual–Wagon	1992–88	00400–BR013	4.95
Collision Repair Manual–FX	1988–87	00400–BRM00–6E	4.95
Collision Repair Manual–FF/FR (Front Wheel Drive/Rear Wheel Drive)	1987–83	00400–36434–E	6.95

SERVICE PUBLICATIONS (cont'd)

COLLISION REPAIR MANUALS (cont'd)

Model	Year	Part Number	Price
CRESSIDA			
Collision Repair Manual	1992–89	00400–BR016	$6.95
Collision Repair Manual–Sedan	1992–87	00400–BR012	6.95
Collision Repair Manual–Wagon	1992–88	00400–BR014	4.95
LANDCRUISER			
Collision Repair Manual	1997–93	00400–BR050	15.00
MR2			
Collision Repair Manual	1995–91	00400–BR025	6.95
Collision Repair Manual	1989–85	00400–36440–A	15.00
Collision Repair Manual–T–Roof	1989–87	00400–BRM00–8E	4.95
PASEO			
Collision Repair Manual	1997–96	00400–BR05	15.00
Collision Repair Manual–Convertible	1997	00400–BR065	15.00
Collision Repair Manual	1995–92	00400–BR030	9.00
PREVIA			
Collision Repair Manual	1997–91	00400–BR027	6.95
RAV4			
Collision Repair Manual	1997–96	00400–BR045	20.00
Collision Repair Manual–5–Door	1997–96	00400–BR052	15.00
SUPRA			
Collision Repair Manual	1997–93	00400–BR042	9.00
Collision Repair Manual–Sport Roof	1992–86	00400–BRM00–5E	6.95
Collision Repair Manual	1992–86	00400–BRM00–9E	4.95
SUPRA, CELICA			
Collision Repair Manual	1986–82	00400–36182	6.95
TERCEL			
Collision Repair Manual	1997–95	00400–BR047	20.00
Collision Repair Manual	1994–92	00400–BR029	9.00
Collision Repair Manual–Sedan	1991–86	00400–BRM00–7U	6.95
Collision Repair Manual–Coupe	1991–87	00400–BRM01–1U	4.95
Collision Repair Manual	1986–85	00400–36431–E	6.95
Collision Repair Manual–4WD	1988–83	00400–36432–E	6.95
VAN			
Collision Repair Manual	1989–84	00400–BRM00–3E	6.95
4RUNNER			
Collision Repair Manual	1997–96	00400–BR060	20.00

SERVICE PUBLICATIONS (cont'd)

COLLISION REPAIR SUPPORT MATERIALS

These manuals focus on the fundamental skills necessary to develop a qualified body or paint technician.

Each title is useful for:

- Quick reference guidelines
- Fundamental repair information
- Basic diagnostic and damage assessment

Name	Part Number	Price
FUNDAMENTAL BODY REPAIR PROCEDURES		
Fundamental Manual	00400–BRM00–2E	$14.95
FUNDAMENTAL PAINTING PROCEDURES		
Fundamental Manual	00400–BR024	19.00

COLLISION REPAIR TRAINING COURSE PACKAGES

Each of these course packages are used exclusively at all Toyota Collision Repair and Refinish Training Centers and are available as self–study training packages for technicians performing collision repair and refinish operations.

Each training package includes a technician reference guide, videotape and learning aid.

Topics covered include:

- Cutting and welding procedures
- Body panel replacement
- Preparation procedures for refinish
- Color evaluation

Name	Part Number	Price
Toyota Paint Finish Repair (PFR)	00400–10000	$54.95
Toyota Color Matching For Painters (CMFP)	00415–10002	54.95
Toyota Advanced Painting Techniques (APT)	00415–10004	54.95
Toyota Non–Structural Body Repair Techniques (NBRT)	00415–10001	54.95
Toyota Structural Body Repair Techniques (SBRT)	00415–10003	54.95

SERVICE PUBLICATIONS (cont'd)

COLLISION REPAIR INFORMATION BULLETINS

Collision Repair Information Bulletins (CRIBS) provide Toyota body and paint technicians with the latest developments in collision repair and refinish. Information is divided among the following topics:

- General information
- Structural repair
- Welding
- Refinish
- Exterior
- Interior
- Electrical
- Alignment
- Tools and equipment

Name	Part Number	Price
Collision Repair Information Binder includes Bulletins #1–41	00408–03000–01	$20.00
CRIB Bulletin #49	00408–03000–49	1.00
CRIB Bulletins #51–57	00408–03000–51–57	10.00
CRIB Bulletins #58–61	00408–03000–58–61	5.00
CRIB Bulletins #62–65	00408–03000–62–65	5.00
CRIB Bulletins #66–67	00408–03000–66–67	5.00
CRIB Bulletins #68–69	00408–03000–68–69	1.18
CRIB Bulletin #70	00408–03000–70	2.00
CRIB Bulletin #71	00408–03000–71	2.24
CRIB Bulletin #72	00408–03000–72	1.62

BODY DIMENSIONS GUIDE

The Toyota Body Dimension Guide provides data necessary to assess the extent of collision damage by using vehicle–specific dimension charts and measurement specifications. The dimension guide provides specifications for the following areas:

- engine compartment
- door and compartment openings
- underbody
- suspension crossmember
- frame alignment
- cab alignment

1980–1997 Body Dimension Guide	00117–00540–97	$3.50

ORDERING INFORMATION ON PAGE 5

ORDER FORM

Please Fill Out Entire Form

Ordering Instructions

1. Fill in the Vehicle Information section.
2. Select the manual(s) containing the information you need. Enter the title, quantity, price, and total cost for each manual you order. Add total cost of the manuals you have ordered and enter in the Subtotal box. Enter applicable state sales tax in the Tax box.
3. Select a shipping method and enter the cost in the blank column. Add Subtotal, Tax, and shipping charge and enter in the Total box.
4. Select Form of Payment. Make check or money order payable to: Toyota Service Publications.
5. Complete the shipping label.

Mail your completed order form to:
TOYOTA SERVICE PUBLICATIONS
750 W. Victoria St., Compton, CA 90220-5538

CREDIT CARD TOLL-FREE TELEPHONE ORDERING
You may also order your manuals by phone. Please have your order form filled out and your credit card handy when calling our operators. Call between the hours of 7:00 a.m. and 4:30 p.m. PST at 1-800-622-2033.

1. VEHICLE INFORMATION: Helps confirm correct manual

Model:_____ Year:_____

Vehicle I.D. # | | | | | | | | | | | | | | | | |
(See door opening on driver's side. Example: JT2MX63EB0123456)

Customer Name:_____

2. MANUAL TYPE	MODEL	YEAR	COST	QTY	TOTAL COST
Example: Repair	Camry (Vol. I)	1997	75.00	1	75.00
Repair	Camry (Vol. II)	1997	100.00	1	100.00

MOST MANUALS COVER ONE MODEL YEAR ONLY	**Subtotal**	
APPLICABLE STATE SALES TAX **MUST** BE INCLUDED	**Tax***	
***SALES TAX REQUIRED EXCEPT FOR STATES LISTED BELOW:** DELAWARE, NEW HAMPSHIRE, HAWAII, MONTANA, OREGON		

3. SHIPPING METHOD**

(Choose One)	Delivery Time	Cost	
☐ Air 1***	2 days	20.00	
☐ Air 2***	3-4 days	12.00	
☐ Surface 1	2-3 weeks	6.00	
FOREIGN SHIPMENTS: SHIPPED AIR ONLY AND APPLICABLE DUTY CHARGES PAID BY CUSTOMER, AND A PHONE NUMBER IS NEEDED FOR SHIPMENT. NOTE: MANUALS ARE SHIPPED AIR ONLY TO ALASKA, PUERTO RICO, VIRGIN ISLANDS, AND HAWAII.			
		Total Order	**$**

** Shipping and handling costs reflect single manual orders only. For multiple manuals, please call for charges. Shipping and handling for a single Owner's Manual is $3.00.
*** Air 1 and Air 2: No deliveries to P.O. Boxes or APO.

4. FORM OF PAYMENT:

Please do not send cash

☐ Check ☐ Money Order Payable to Toyota Service Publications
☐ Visa ☐ MasterCard

Credit Card # | | | | | | | | | | | | | | | | |

Expiration Date | | | – | | |

Daytime Phone # (____) _____ – _____

Signature:_____
(Required if using a credit card)

When service information is similar for Toyotas built for the U.S. and for other countries, the illustrations may not always show a U.S. model. Also, when the mechanical design does not significantly change from one year to the next, the same manual may be applicable to several years. All information and specifications in any manual are based on the latest data available at the time of publication. However, in the interest of Toyota's policy of continual product improvement, they are subject to change. Prices of manuals are also subject to change without notice.

5. SHIPPING LABEL:

COMPANY NAME: (IF APPLICABLE)

YOUR NAME:

ADDRESS:

CITY: STATE: ZIP:

P/N 00400-1997C
97-DEV-146

UNDER BODY

(Three-Dimensional Distance)

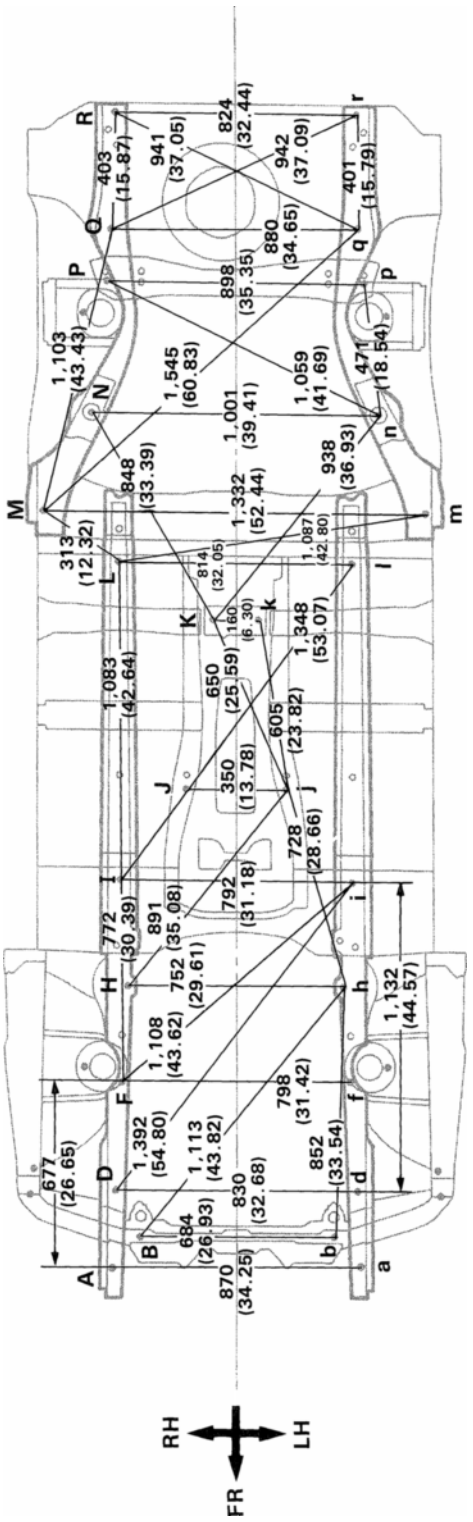

Symbol	Name	Hole dia.	Symbol	Name	Hole dia.
A, a	Font side member standard hole	7 (0.28)	L, l	Front floor reinforcement standard hole	10 (0.39)
B, b	Font crossmember working hole	9 (0.35)	M, m	Rear floor side member standard hole	18 (0.71)
D, d	Font side member standard hole	18 (0.71)	N, n	Rear suspension member installation nut	14 (0.55)nut
F, f	Font suspension crossmember installation hole	13 (0.51)	P, p	Suspension member bracket installation nut-front, outer	10 (0.39)nut
H, h	Front suspension crossmember installation nut	14 (0.55) nut	Q, q	Rear floor side member rear standard hole	18 (0.71)
I, i	Front side member standard hole	18 (0.71)	R	Tank band installation nut	10 (0.39)nut
J, j	Engine rear mounting member installation nut-front	10 (0.39) nut	r	Transport hook installation nut	12 (0. 47)nut
K, k	Propeller shaft center support bearing installation nut	10(0.39) nut	—	—	—

NO8908

UNDER BODY (Cont'd)

(Two-Dimensional Distance)

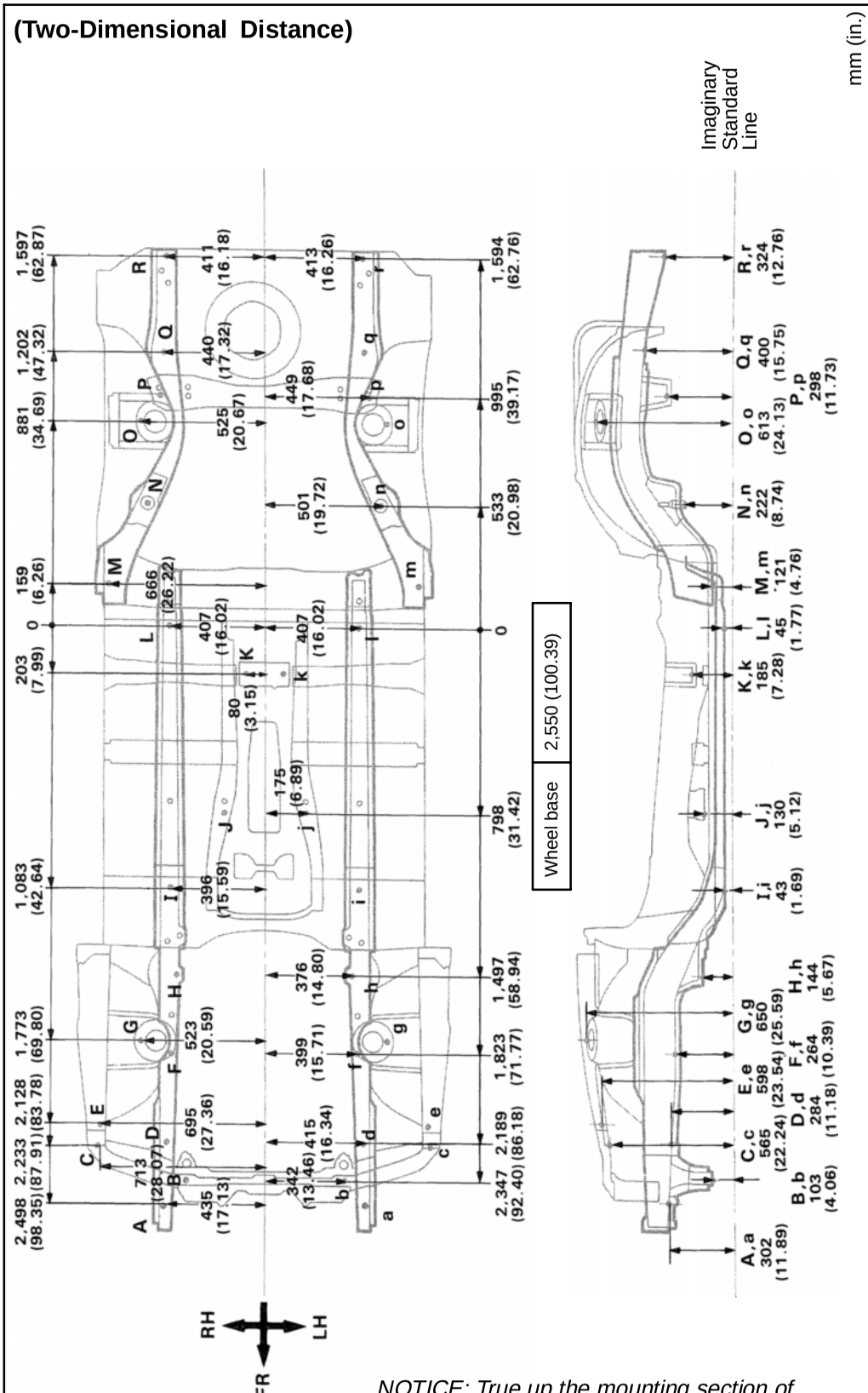

NOTICE: True up the mounting section of the front airbag sensor very carefully and accurately so that the sensor can be mounted at the correct angle.

Symbol	Name	Hole dia.	Symbol	Name	Hole dia.
A, a	Front side member standard hole	7 (0.28)	K, k	Propeller shaft center support bearing installation nut	10 (0.39)nut
B, b	Front crossmember working hole	9 (0.35)	L, l	Front floor reinforcement standard bole	10 (0.39)
C, c	Front airbag sensor installation hole	9 (0.35)	M, m	Rear floor side member standard hole	18 (0.71)
D, d	Front side member standard bole	18 (0.71)	N, n	Rear suspension member installation nut	14 (0.55)nut
E, e	Front airbag sensor installation nut	8 (0.31) nut	O, o	Rear spring support hole-outer	9 (0.35)
F, f	Front suspension crossmember installation hole	13 (0.51)	P, p	Suspension member bracket installation nut-front, outer	10 (0.39)nut
G, g	Front spring support hole-outer	13 (0.51)	Q, q	Rear floor side member rear standard hole	18 (0.71)
H, h	Front suspension crossmember installation nut	14 (0.55) nut	R	Tank band installation nut	10 (0.39)nut
I, i	Front side member standard hole	18 (0.71)	r	Transport hook installation nut	12 (0.47)nut
J, j	Engine rear mounting member installation nut-front	10 (0.39) nut	—	—	—

COLLISION REPAIR INFORMATION

FOR THE TOYOTA DEALER

TITLE:	URETHANE ADHESIVE SEALANT FOR FIXED GLASS INSTALLATION	PAGE 1 of 3

SECTION: STRUCTURAL REPAIR BULLETIN #31

MODELS: ALL

DATE: NOVEMBER 1988

In order to comply with FMVSS 212 – Windshield Retention and FMVSS 216 – Roof Crush Resistance, the factory uses a urethane adhesive sealant with bonded strength of not less than 40 kilograms per square centimeter or 569 pounds per square inch for certain bonded windshields and rear windows on Toyota vehicles.

A Urethane adhesive sealant of at least equivalent strength must be used to maintain these retention and roof crush standards when windshield glass replacements are performed by either the dealer or an outside glass shop.

Since the adhesive kits listed in Toyota Repair Manuals are not available in the U.S.A., a listing of some locally available equivalent materials is provided below. Be sure to follow the sealant manufacturer's instructions for best results.

- CVS Urethane Auto Glass Sealer by American Sure Seal
  Bonding strength = 600 pounds per square in. (approximate)
- Super Fast Urethane by 3M
  Bonding strength = 1000 pounds per square in. (approximate)
- Unrest 212 by Kent Industries
  Bonding strength = 600 pounds per square in. (approximate)
- Urethane E Auto Glass Sealer by Protective Treatment Inc.
  Bonding strength = 600 pounds per square in. (approximate)

For more detailed application information, see the attached "Urethane Adhesive Sealant Application for Toyota Models".

Rear quarter windows on some models are bonded, however, the adhesive for these windows requires less bonding strength and therefore, use of Butyl sealer may be sufficient for these windows.

This bulletin is for information and clarification purposes only. Existing Warranty policy and Flat Rate information have not been changed. Toyota is not responsible for problems that occur from usage of improper sealants or procedures which fail to meet Toyota specifications. PLEASE CONSULT THE APPROPRIATE TOYOTA SERVICE MANUAL FOR THE PROPER REPAIR PROCEDURES.

NOTE: PLEASE ROUTE THIS BULLETIN TO YOUR COLLISION REPAIR CENTER MANAGER

URETHANE ADHESIVE SEALANT APPLICATION FOR TOYOTA MODELS

MODEL	BODY	WINDSHIELD	REAR WINDOW	QUARTER WINDOW
TERCEL				
AL/EL 8608 to date EL	2–Dr Sdn 4–Dr Sdn 5–Dr Sdn	Urethane Bonded	Conventional Weatherstrip	Butyl Bonded
8308 to 8802 AL	5–Dr Wgn	Urethane Bonded	Conventional Weatherstrip	Conventional Weatherstrip
8208 to 8607 AL	3–Dr L/B	Urethane Bonded	Conventional Weatherstrip	Conventional Weatherstrip
COROLLA				
FWD AE 8708 to date	2–Dr S/C 4–Dr Sdn	Urethane Bonded	Urethane Bonded	Butyl Bonded
	All–Trac Wgn	Urethane Bonded	Urethane Bonded	Butyl Bonded
	4–Dr Wgn	Urethane Bonded	Conventional Weatherstrip	Butyl Bonded
FWD AE 8409 to 8707	4–Dr Sdn	Urethane Bonded	Conventional Weatherstrip	Conventional Weatherstrip
	5–Dr L/B	Urethane Bonded	Conventional Weatherstrip	Butyl Bonded
FX Models 8608 to 8807	3–Dr L/B	Urethane Bonded	Conventional Weatherstrip	Conventional Weatherstrip
RWD AE 8409 to 8707	2–Dr S/C 2–Dr L/B	Urethane Bonded	Conventional Weatherstrip	Butyl Bonded
MR2				
AW 8501 to date	2–Seater	Urethane Bonded	Conventional Weatherstrip	Butyl Bonded
CELICA				
ST 8509 to date	2–Dr S/C 2–Dr L/B	Urethane Bonded	Urethane Bonded	Butyl Bonded
SUPRA				
MA70 8601 to date	2–Dr L/B	Urethane Bonded	Urethane Bonded	Butyl Bonded

URETHANE ADHESIVE SEALANT APPLICATION FOR TOYOTA MODELS (cont'd)

MODEL	BODY	WINDSHIELD	REAR WINDOW	QUARTER WINDOW
CAMRY				
SV/VV 8609 to date	4–Dr Sdn	Urethane Bonded	Urethane Bonded	Butyl Bonded
	5–Dr Wgn	Urethane Bonded	Urethane Bonded	Butyl Bonded
SV/CV 8409 to 8608	4–Dr Sdn 5–Dr L/B	Urethane Bonded	Conventional Weatherstrip	Butyl Bonded
CRESSIDA				
MX 8808 to date	4–Dr Sdn	Urethane Bonded	Conventional Weatherstrip	Urethane Bonded
8404 to 8807	4–Dr Sdn	Urethane Bonded	Urethane Bonded	Butyl Bonded
	5–Dr Wgn	Urethane Bonded	Conventional Weatherstrip	Butyl Bonded
VAN				
YR 8309 to date	Passenger/ Cargo	Urethane Bonded	Conventional Weatherstrip	Conventional Weatherstrip
LAND CRUISER				
FJ	4–Dr Wgn	Conventional Weatherstrip	Conventional Weatherstrip	Conventional Weatherstrip
TRUCK				
RN/LN 8808 to date	4 x 2 4 x 4	Refer to Service Manual	Conventional Weatherstrip	Conventional Weatherstrip
TRUCK				
RN/LN 8309 to 8807	4 x 2 4 x 4	Refer to Service Manual	Conventional Weatherstrip	Conventional Weatherstrip
4RUNNER				
8408 to date	All	Urethane Bonded	Conventional Weatherstrip	Butyl Bonded

The following urethane adhesive kits described in Toyota Repair Manuals are <u>not</u> available in the U.S.A.

<u>Adhesive Kits in Toyota Repair Manuals</u>

P/N 08850–00070 32 to 59 degrees F (0 to 15 degrees C)

08850–00080 59 to 95 degrees F (15 to 35 degrees C)

08850–00090 95 to 113 degrees F (35 to 45 degrees C)

COLLISION REPAIR INFORMATION

FOR THE TOYOTA DEALER

TITLE: PAINT VENDOR TECHNICAL SERVICE SUPPORT

SECTION: GENERAL INFORMATION BULLETIN #77

MODELS: ALL

DATE: MARCH 1997

TOYOTA SUPPORTS TECHNICIAN PROFESSIONALISM THROUGH ASE CERTIFICATION

For your reference, we are providing the following technical service telephone numbers and support features offered by your respective paint supplier. Please contact the suppliers directly to receive important technical and refinish product information.

BASF
800–825–3000
8:00 AM to 8:00 PM EST
- technical information
- product information
- color information

DUPONT
800–222–5225
8:00 AM to 4:30 PM EST
- technical service
- paint system selection
- training information

ICI AUTOCOLOR
800–647–6050
8:00 AM to 5:30 PM EST
- technical product/process information
- color information

PPG
- technical service (216) 572–6111
  8:00 AM to 6:00 PM EST
- color library (216) 572–6100
  8:00 AM to 6:00 PM EST
- training info./schedules
  (800) 450–2654 24–hour service

SHERWIN–WILLIAMS
800–798–5872 **(For Martin Senour 800–526–6704)**
8:30 AM to 5:00 PM EST
- technical applications assistance
- color match assistance
- technical training, locations/dates

SIKKENS
800–521–9222
8:00 AM to 6:00 PM EST
- technical support
- color information

SPIES–HECKER
800–447–7437
8:00 AM to 6:00 PM EST
- technical information
- color information

STANDOX
800–551–9296
8:00 AM to 7:00 PM EST
- product technical issues – x3108
- color issues –x3109 or 3110
- training issues – x3139 or 3118

Information and specific technical procedures for the repair and refinish of Toyota vehicles may be obtained by attending a Toyota Collision Repair and Refinish Training course.

Toyota courses are designed to enhance the skills of collision repair technicians and provide detailed information in order to simplify and improve the quality of each repair. Courses are taught at each Toyota Collision Repair and Refinish Training Center.

For additional information about Toyota Collision Repair and Refinish Training courses and a course schedule, please contact your local Toyota regional office.

COLLISION REPAIR INFORMATION

FOR THE TOYOTA DEALER

TITLE: WELDING HIGH STRENGTH STEEL (H.S.S.)

SECTION: WELDING BULLETIN #27

MODELS: ALL TOYOTA MODELS

DATE: JULY 1988

In today's body shop environment high strength steel (H.S.S.) body parts are frequently welded during collision damage repairs. Typical uses for H.S.S. are the front cross member, front body outer pillar, floor side member and door side impact protection beam. Because H.S.S. is used in these areas of potential high stress, repairs must be done properly to maintain the structural integrity of the vehicle.

Two types of H.S.S. are used. Solution hardened H.S.S. is used for door panels, hood outer panel, etc., while precipitation hardened H.S.S. is used for door impact beams and bumper reinforcements. It is not necessary to distinguish solid solution hardened steel from ordinary steels for repair purposes.

The location of H.S.S. parts can be found in the Toyota Repair Manual for Collision Damage under the Body Panel Construction section. A sample chart from the 1987 Camry Collision Repair Manual is on page 3 of this bulletin. A list of available Toyota Collision Repair manuals is on page 4.

REPAIR GUIDELINES

H.S.S. and ordinary steel parts in Toyota vehicles are welded using the same methods. The following precautions apply:

- Use either spot welding or MIG/MAG (shield gas) welding. MIG/MAG (shield gas) welding should only be done by an experienced body shop person.
- Only braze body components previously brazed at the factory and as indicated in the Toyota Repair Manual for Collision Damage.
- Do not use an oxy–acetylene torch for fusion welding auto bodies. The large heat affected zone may destroy galvanized coatings and cause excessive panel distortions. In addition, an oxy–acetylene torch will reduce the strength and increase the brittleness of H.S.S.

REFERENCE MATERIALS

The following manuals should be readily available in the body shop:

- Toyota Fundamental Body Repair Procedures Manual
- Complete set of Toyota Repair Manuals for Collision Damage

TOOLS

Proper tools are mandatory for H.S.S. repair. Tools include:

- MIG/MAG welder
- Spot welder
- H.S.S. spot weld cutter that will cut 8mm and 10mm holes
- Air saw
- Plasma cutter
- Air power chisel with panel cutter
- Hole punch
- Head protector
- Dust mask
- Face protector
- Vise grip pliers
- Weld through primer (see page 5 of this bulletin)
- Ear plugs
- Car cover for glass and interior

WELDS

Four types of welding are required in the repair of Toyota vehicles:

- Spot
- Plug
- Continuous
- Braze

Technicians doing repair work must be proficient in doing all four types of welding since all four are used in various locations throughout the vehicle. The Toyota Repair Manuals for Collision Damage show the location and type of welds that must be used. The correct number and type of welds must be used to ensure structural integrity.

PROCEDURE

The complete in–depth procedure for welding H.S.S. and ordinary steel can be found in the Toyota Fundamental Body Repair Procedures manual for the applicable vehicle. The basic procedure requires:

1. Removal of auxiliary parts
2. Removal of damaged parts
3. Prepare new parts
4. Position new parts
5. Welding
6. Finishing of welded areas.

BODY PANEL CONSTRUCTION — High Strength Steel (H.S.S.) Parts

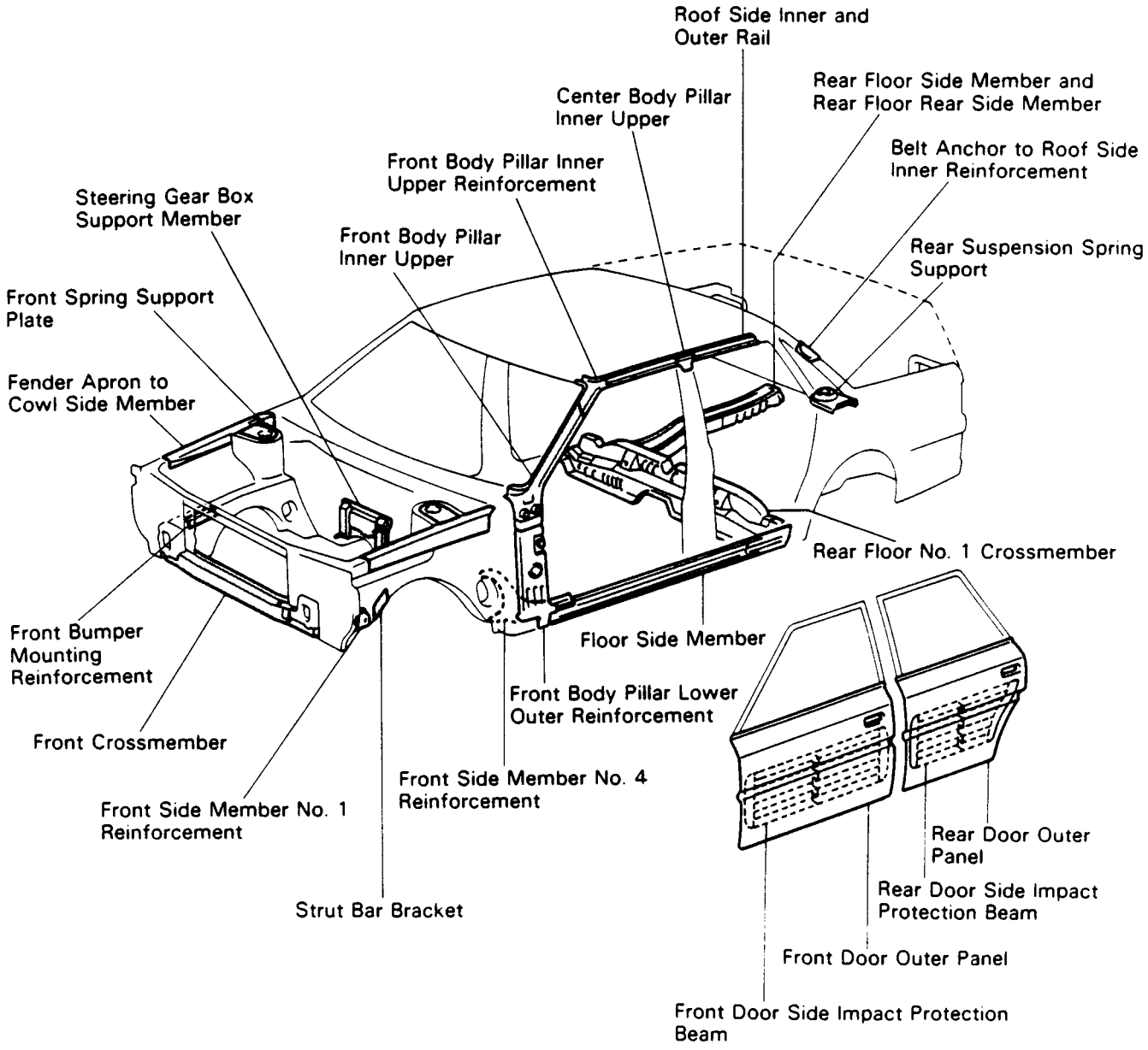

TOYOTA SERVICE PUBLICATIONS

PART NUMBER	DESCRIPTION
3643–8E	Fundamental Painting Procedures
BRM00–2E	Fundamental Collision Repair
3643–1E	Tercel 2WD
3643–2E	Tercel 4WD
3643–4E	Corolla 83–87
36182	Celica/Supra 82–86
BRM00–1E	Celica 86–88
BRM00–5E	Supra 86–88
3643–3E	Camry 83–86
36118	Cressida 81–84
3644–1E	Cressida 85–88
3644–2E	Cressida Wgn. 85–88
3644–oA	MR2 85–88
BRM00–3E	Van 84–87
BRM01–1U	Tercel Coupe 87–88
BRM01–0U	Camry 87
BRM00–7U	Tercel Sedan 87–88
BR012	Corolla 88
BRM00–6E	FX/FX 16 87–88
BRM00–9E	Supra Sport Roof 86–88
BRM00–8E	MR2 T–Roof 85–88

You may order these on your TDN through the non–parts ordering system.

WELD–THROUGH PRIMER SUPPLIERS *

1. HTP "Cold Galvanizing Compound"
   Part No. 12022
   HTP America, Inc.
   261 Woodwork Lane
   Palatine, IL 60067

2. TTE "Dan–Prime"
   Transnational Technology Enterprises, Inc.
   3541 Old Conejo Road, #107
   Newbury Park, CA 91320

3. Anchor Brand "Spray–Galv"
   NASCO
   Welding Equipment and Safety Supplies
   Chicago, IL

4. 3M "Weld–Thru Coating"
   Part No. 051131–05913
   3M Automotive Trades Division
   St. Paul, MN

5. Kent "Spotweld Primer"
   Part No. 50190
   Kent Industries
   4500 Euclid Ave.
   Cleveland, OH 44103

***** There may be other sources for this material that are not listed here.

COLLISION REPAIR INFORMATION

FOR THE TOYOTA DEALER

TITLE: 1997 PAINT AND REFINISH FORMULA CODES

SECTION: REFINISH BULLETIN #74

MODELS: ALL

DATE: JANUARY 1997

Attached for your reference is a list of all 1997 Toyota paint codes and the refinish paint codes for the following refinish paint manufacturers:

BASF, DuPont, PPG, Sherwin–Williams, Sikkens, Spies–Hecker, and ICI Autocolor.

NOTE: The vehicle paint code is on the certification label which can be located on the driver's side door jamb or the lower section of the "B" pillar.

NOTE: Please contact your local paint representative for the actual paint mixing formulas or if you need help in color matching.

1997 TOYOTA PAINT CODES AND COLOR NAMES

COLOR CODE	COLOR NAME	BASF	DUPONT	PPG	SHERWIN–WILLIAMS	SIKKENS	SPIES–HECKER	ICI AUTO COLOR
040	Super White	Toy040	W8430	90288	35000	Toy040	16170	KK47
041	White	Toy041	L8416	90274	34792	Toy041	17618	KJ64
045	Super White	Toy045	H8931	90547	38712	Toy045	16004	NP65
051	Diamond White Pearl	Toy051	L9246 L9247	90822 90826	42872 42873	Toy051	98125 16329	PF76B TD86G
056	Natural White	Toy056	F1858	91452	52893	Toy056	15217	BAB5
1A0	Platinum Metallic	Toy1A0	N9923	4896	49700	Toy1A0	70809	6ED5B
1A1	Anthracite Metallic	Toy1A1	L9991	4897	48977	Toy1A1	80164	5TX2B
1A2	Topaz Metallic	Toy1A2	F0016	4898	49701	Toy1A2	70855	6ED9B
1A5	Desert Dune Pearl	Toy1A5	F1458	36090	52139	Toy1A5	72759	8NH3B
1A6	Moonglow Pearl	Toy1A6	F1459	36091	52140	Toy1A6	72760	8NH4B
1B1	Champagne Pearl	Toy1B1	F2186	5252	53074	Toy1B1	20699	FLT9B
1B2	Antique Sage Pearl	Toy1B2	F2201	5324	54757	Toy1B2	73622	HRE5B

1997 TOYOTA PAINT CODES AND COLOR NAMES (cont'd)

COLOR CODE	COLOR NAME	BASF	DUPONT	PPG	SHERWIN–WILLIAMS	SIKKENS	SPIES–HECKER	ICI AUTO COLOR
183	Blue Slate Metallic	Toy183	K9318	35139	44338	Toy183	98625	2698B
191	Graystone Pearl	Toy191	F1051	5046	51142	Toy191	91326	2N7JB
193	Opal Beige Pearl	Toy193	L9881	4899	49669	Toy193	70430	4YV6B
196	Pewter Pearl	Toy196	H9878	4742	47605	Toy196	70401	4SS6B
199	Alpine Silver Metallic	Toy199	L9990	4900	48976	Toy199	70706	5TX1B
202	Black	Toy202	F0220	9300	1738SW 8803MS	Toy202	73935	TH21B
204	Black Metal-lic	Toy204	H8645	9624	35533	Toy204	96020	A237B
205	Satin Black Metallic	Toy205	L9024	9756	40888	Toy205	97765	B941B
3E5	Super Red	Toy3E5	W8431	72717	35001	Toy3E5	38916	KK41
3E6	Bright Red	Toy3E6	W8432	72718	35002	Toy3E6	38240	KK42
3H4	Medium Red Pearl	Toy3H4	N8833	73074	38386	Toy3H4	97117	PA49B
3H7	Cardinal Red	Toy3H7	L9026	73279	40890	Toy3H7	38805	WJ91
3J7	Garnet Red Pearl	Toy3J7	L9346	4402 4403	44407 44408	Toy3J7	98626 38992	PH375B
3J8	Prussian Red Pearl	Toy3J8	W9463	4596	46590	Toy3J8	99827	PT73B
3K4	Sunfire Red Pearl	Toy3K4	W9546	4511	46144	Toy3K4	99722	PM54B
3L2	Renaissance Red	Toy3L2	L9992	4902	48978	Toy3L2	30491	5TX3B
3L3	Ruby Red Pearl	Toy3L3	F0294	5042	51162	Toy3L3	30914	6KD3B
3L5	Radiant Red	Toy3L5	F2688	5287	54291	Toy3L5	33476	JNK8
3L9	Coral Rose Pearl	Toy3L9	F2727	5335	54763	Toy3L9	33609	HRF2B
4K9	Sandstone Beige Metallic	Toy4K9	N9216	26846	43482	Toy4K9	98224	2575B
4M4	Sierra Beige Metallic	Toy4M4	H9879	4743	47606	Toy4M4	20157	4SS7B
4M9	Cashmere Beige Metallic	Toy4M9	N9924	4903	49702	Toy4M9	20261	6ED6B
4N5	Vintage Rose Metallic	Toy4N5	F2716	5339	54862	Toy4N5	61953	HYV5B

1997 TOYOTA PAINT CODES AND COLOR NAMES (cont'd)

COLOR CODE	COLOR NAME	BASF	DUPONT	PPG	SHERWIN–WILLIAMS	SIKKENS	SPIES–HECKER	ICI AUTO COLOR
6M1	Dark Emerald Green Pearl	Toy6M1	W9542	4595	46589	Toy6M1	99746	PM72B
6M3	Silver Spruce Metallic	Toy6M3	W9514	4474	45931	Toy6M3	99679	D381B
6N5	Sequoia Green Metallic	Toy6N5	F0698	5195	53003	Toy6N5	61270	7DK1B
6N7	Sierra Green Metallic	Toy6N7	F1036	5047	51163	Toy6N7	61391	7PP1B
6P2	Classic Green Pearl	Toy6P2	F1850	5173	52889	Toy6P2	61953	BAA7B
6P3	Deep Jewel Green Pearl	Toy6P3	F1805	5166	52887	Toy6P3	61928	ARD3B
6P5	Bright Ivy Pearl	Toy6P5	F2266	5326	54764	Toy6P5	64196	HDJ7B
6P6	Meadow Green Pearl	Toy6P6	F2718	N/A	54483	Toy6P6	64101	HDJ3B
6P9	Glacier Green Metallic	Toy6P9	F2721	5333	54760	Toy6P9	64198	HRE8B
748	Ocean Mist Metallic	Toy748	L9679	4636	53004	Toy748	91343	PT69B
751	Evergreen Pearl	Toy751	H9881	4746	47857	Toy751	60290	4SS9B
754	Paradise Blue Metallic	Toy754	F0893	5043	51166	Toy754	53753	8VR3B
756	Light Turquoise Pearl	Toy756	F1856	5171	52891	Toy756	61954	BAB1B
8K0	Night Shadow Pearl	Toy8K0	N9925	4910	49707	Toy8K0	50887	6ED7B
8K1	Orchid Blue Pearl	Toy8K1	F0605	5044	51167	Toy8K1	53510	7DJ8B
8K4	Confetti Blue Metallic	Toy8K4	F0699	5196	53005	Toy8K4	53552	7DK2B
8K6	Cobalt Blue Metallic	Toy8K6	F0892	5045	51168	Toy8K6	53754	8VR2B
8K8	Brilliant Blue Pearl	Toy8K8	F1800	5161	52884	Toy8K8	54221	ARC7B
8K9	Bright Iris Pearl	Toy8K9	F1038	5051	51169	Toy8K9	53728	7PP9B

1997 TOYOTA PAINT CODES AND COLOR NAMES (cont'd)

COLOR CODE	COLOR NAME	BASF	DUPONT	PPG	SHERWIN–WILLIAMS	SIKKENS	SPIES–HECKER	ICI AUTO COLOR
8L3	Blue Velvet Pearl	Toy8L3	F2239	5328	54032	Toy8L3	54676	FRC7B
8L5	Royal Sapphire Pearl	Toy8L5	F2728	5329	54485	Toy8L5	55068	HDJ4B
8L6	Azure Blue Pearl	Toy8L6	F2058	5205	53071	Toy8L6	54561	ETB8B
8L7	Stellar Blue Pearl	Toy8L7	F2059	5206	53072	Toy8L7	54562	ETB9B
925	Purple Storm Metallic	Toy925	L9681	5197	53006	Toy925	91614	PT74B
926	Lavender Steel Metallic	Toy926	F2060	5207	53073	Toy926	40582	ETC1B
927	Shadow Plum Pearl	Toy927	F0899	5053	51170	Toy927	80374	7PR2B
930	Blue Dusk Pearl	Toy930	F2723	5330	54758	Toy930	40713	HRE6B
931	Frosted Iris Metallic	Toy931	F2724	5331	54759	Toy931	40714	HRE7B
932	Misty Plum Metallic	Toy932	F2267	5284	53981	Toy932	40663	GNL8B
933	Fiesta Blue Metallic	Toy933	F2695	5291	54297	Toy933	40664	GNM3B
936	Deep Violet Pearl	Toy936	F2726	5334	54761	Toy936	40715	HRE9B

TWO TONE COMBINATIONS

2AB	1A5 Desert Dune Pearl 1A6 Moonglow Pearl	Toy1A5 Toy1A6	F1458 F1459	36090 36091	52139 52140	Toy1A5 Toy1A6	72759 72760	8NH3B 8NH4B
2AC	6M1 Dark Emerald Pearl 1A6 Moonglow Pearl	Toy6M1 Toy1A6	W9542 F1459	4595 36091	46589 52140	Toy6M1 Toy1A6	99746 72760	PM72B 8NH4B
2BV	6N7 Sierra Green Metallic 6P0 Gray/Green Metallic	Toy6N7 Toy6P0	F1036 F1799	5047 5325	51163 52883	Toy6N7 Toy6P0	61361 61753	7PP7B ARC5B
28X	196 Pewter Pearl 202 Black	Toy196 Toy202	H9878 F0220	4742 9300	47605 1738SW 8803MS	Toy196 Toy202	70401 79335	4226B TH21B

NOTE: Standox uses the Toyota color code to identify the color.
Example: Toyota color code 056 = Standox 056

For additional information about color matching Toyota vehicles, refer to the repainting section of the Toyota Fundamental Painting procedure manual (part # 00400–BR024) or contact your regional office to obtain information about Toyota Collision Repair and Refinish Training Programs.

COLLISION REPAIR INFORMATION

FOR THE TOYOTA DEALER

TITLE: 1997 PAINT AND REFINISH FORMULA CODES

SECTION: REFINISH BULLETIN #74

MODELS: ALL

DATE: JANUARY 1997

Attached for your reference is a list of all 1997 Toyota paint codes and the refinish paint codes for the following refinish paint manufacturers:

BASF, DuPont, PPG, Sherwin–Williams, Sikkens, Spies–Hecker, and ICI Autocolor.

NOTE: The vehicle paint code is on the certification label which can be located on the driver's side door jamb or the lower section of the "B" pillar.

NOTE: Please contact your local paint representative for the actual paint mixing formulas or if you need help in color matching.

1997 TOYOTA PAINT CODES AND COLOR NAMES

COLOR CODE	COLOR NAME	BASF	DUPONT	PPG	SHERWIN–WILLIAMS	SIKKENS	SPIES–HECKER	ICI AUTO COLOR
040	Super White	Toy040	W8430	90288	35000	Toy040	16170	KK47
041	White	Toy041	L8416	90274	34792	Toy041	17618	KJ64
045	Super White	Toy045	H8931	90547	38712	Toy045	16004	NP65
051	Diamond White Pearl	Toy051	L9246 L9247	90822 90826	42872 42873	Toy051	98125 16329	PF76B TD86G
056	Natural White	Toy056	F1858	91452	52893	Toy056	15217	BAB5
1A0	Platinum Metallic	Toy1A0	N9923	4896	49700	Toy1A0	70809	6ED5B
1A1	Anthracite Metallic	Toy1A1	L9991	4897	48977	Toy1A1	80164	5TX2B
1A2	Topaz Metallic	Toy1A2	F0016	4898	49701	Toy1A2	70855	6ED9B
1A5	Desert Dune Pearl	Toy1A5	F1458	36090	52139	Toy1A5	72759	8NH3B
1A6	Moonglow Pearl	Toy1A6	F1459	36091	52140	Toy1A6	72760	8NH4B
1B1	Champagne Pearl	Toy1B1	F2186	5252	53074	Toy1B1	20699	FLT9B
1B2	Antique Sage Pearl	Toy1B2	F2201	5324	54757	Toy1B2	73622	HRE5B

1997 TOYOTA PAINT CODES AND COLOR NAMES (cont'd)

COLOR CODE	COLOR NAME	BASF	DUPONT	PPG	SHERWIN–WILLIAMS	SIKKENS	SPIES–HECKER	ICI AUTO COLOR
183	Blue Slate Metallic	Toy183	K9318	35139	44338	Toy183	98625	2698B
191	Graystone Pearl	Toy191	F1051	5046	51142	Toy191	91326	2N7JB
193	Opal Beige Pearl	Toy193	L9881	4899	49669	Toy193	70430	4YV6B
196	Pewter Pearl	Toy196	H9878	4742	47605	Toy196	70401	4SS6B
199	Alpine Silver Metallic	Toy199	L9990	4900	48976	Toy199	70706	5TX1B
202	Black	Toy202	F0220	9300	1738SW 8803MS	Toy202	73935	TH21B
204	Black Metal-lic	Toy204	H8645	9624	35533	Toy204	96020	A237B
205	Satin Black Metallic	Toy205	L9024	9756	40888	Toy205	97765	B941B
3E5	Super Red	Toy3E5	W8431	72717	35001	Toy3E5	38916	KK41
3E6	Bright Red	Toy3E6	W8432	72718	35002	Toy3E6	38240	KK42
3H4	Medium Red Pearl	Toy3H4	N8833	73074	38386	Toy3H4	97117	PA49B
3H7	Cardinal Red	Toy3H7	L9026	73279	40890	Toy3H7	38805	WJ91
3J7	Garnet Red Pearl	Toy3J7	L9346	4402 4403	44407 44408	Toy3J7	98626 38992	PH375B
3J8	Prussian Red Pearl	Toy3J8	W9463	4596	46590	Toy3J8	99827	PT73B
3K4	Sunfire Red Pearl	Toy3K4	W9546	4511	46144	Toy3K4	99722	PM54B
3L2	Renaissance Red	Toy3L2	L9992	4902	48978	Toy3L2	30491	5TX3B
3L3	Ruby Red Pearl	Toy3L3	F0294	5042	51162	Toy3L3	30914	6KD3B
3L5	Radiant Red	Toy3L5	F2688	5287	54291	Toy3L5	33476	JNK8
3L9	Coral Rose Pearl	Toy3L9	F2727	5335	54763	Toy3L9	33609	HRF2B
4K9	Sandstone Beige Metallic	Toy4K9	N9216	26846	43482	Toy4K9	98224	2575B
4M4	Sierra Beige Metallic	Toy4M4	H9879	4743	47606	Toy4M4	20157	4SS7B
4M9	Cashmere Beige Metallic	Toy4M9	N9924	4903	49702	Toy4M9	20261	6ED6B
4N5	Vintage Rose Metallic	Toy4N5	F2716	5339	54862	Toy4N5	61953	HYV5B

1997 TOYOTA PAINT CODES AND COLOR NAMES (cont'd)

COLOR CODE	COLOR NAME	BASF	DUPONT	PPG	SHERWIN–WILLIAMS	SIKKENS	SPIES–HECKER	ICI AUTO COLOR
6M1	Dark Emerald Green Pearl	Toy6M1	W9542	4595	46589	Toy6M1	99746	PM72B
6M3	Silver Spruce Metallic	Toy6M3	W9514	4474	45931	Toy6M3	99679	D381B
6N5	Sequoia Green Metallic	Toy6N5	F0698	5195	53003	Toy6N5	61270	7DK1B
6N7	Sierra Green Metallic	Toy6N7	F1036	5047	51163	Toy6N7	61391	7PP1B
6P2	Classic Green Pearl	Toy6P2	F1850	5173	52889	Toy6P2	61953	BAA7B
6P3	Deep Jewel Green Pearl	Toy6P3	F1805	5166	52887	Toy6P3	61928	ARD3B
6P5	Bright Ivy Pearl	Toy6P5	F2266	5326	54764	Toy6P5	64196	HDJ7B
6P6	Meadow Green Pearl	Toy6P6	F2718	N/A	54483	Toy6P6	64101	HDJ3B
6P9	Glacier Green Metallic	Toy6P9	F2721	5333	54760	Toy6P9	64198	HRE8B
748	Ocean Mist Metallic	Toy748	L9679	4636	53004	Toy748	91343	PT69B
751	Evergreen Pearl	Toy751	H9881	4746	47857	Toy751	60290	4SS9B
754	Paradise Blue Metallic	Toy754	F0893	5043	51166	Toy754	53753	8VR3B
756	Light Turquoise Pearl	Toy756	F1856	5171	52891	Toy756	61954	BAB1B
8K0	Night Shadow Pearl	Toy8K0	N9925	4910	49707	Toy8K0	50887	6ED7B
8K1	Orchid Blue Pearl	Toy8K1	F0605	5044	51167	Toy8K1	53510	7DJ8B
8K4	Confetti Blue Metallic	Toy8K4	F0699	5196	53005	Toy8K4	53552	7DK2B
8K6	Cobalt Blue Metallic	Toy8K6	F0892	5045	51168	Toy8K6	53754	8VR2B
8K8	Brilliant Blue Pearl	Toy8K8	F1800	5161	52884	Toy8K8	54221	ARC7B
8K9	Bright Iris Pearl	Toy8K9	F1038	5051	51169	Toy8K9	53728	7PP9B

1997 TOYOTA PAINT CODES AND COLOR NAMES (cont'd)

COLOR CODE	COLOR NAME	BASF	DUPONT	PPG	SHERWIN–WILLIAMS	SIKKENS	SPIES–HECKER	ICI AUTO COLOR
8L3	Blue Velvet Pearl	Toy8L3	F2239	5328	54032	Toy8L3	54676	FRC7B
8L5	Royal Sapphire Pearl	Toy8L5	F2728	5329	54485	Toy8L5	55068	HDJ4B
8L6	Azure Blue Pearl	Toy8L6	F2058	5205	53071	Toy8L6	54561	ETB8B
8L7	Stellar Blue Pearl	Toy8L7	F2059	5206	53072	Toy8L7	54562	ETB9B
925	Purple Storm Metallic	Toy925	L9681	5197	53006	Toy925	91614	PT74B
926	Lavender Steel Metallic	Toy926	F2060	5207	53073	Toy926	40582	ETC1B
927	Shadow Plum Pearl	Toy927	F0899	5053	51170	Toy927	80374	7PR2B
930	Blue Dusk Pearl	Toy930	F2723	5330	54758	Toy930	40713	HRE6B
931	Frosted Iris Metallic	Toy931	F2724	5331	54759	Toy931	40714	HRE7B
932	Misty Plum Metallic	Toy932	F2267	5284	53981	Toy932	40663	GNL8B
933	Fiesta Blue Metallic	Toy933	F2695	5291	54297	Toy933	40664	GNM3B
936	Deep Violet Pearl	Toy936	F2726	5334	54761	Toy936	40715	HRE9B

TWO TONE COMBINATIONS

2AB	1A5 Desert Dune Pearl 1A6 Moonglow Pearl	Toy1A5 Toy1A6	F1458 F1459	36090 36091	52139 52140	Toy1A5 Toy1A6	72759 72760	8NH3B 8NH4B
2AC	6M1 Dark Emerald Pearl 1A6 Moonglow Pearl	Toy6M1 Toy1A6	W9542 F1459	4595 36091	46589 52140	Toy6M1 Toy1A6	99746 72760	PM72B 8NH4B
2BV	6N7 Sierra Green Metallic 6P0 Gray/Green Metallic	Toy6N7 Toy6P0	F1036 F1799	5047 5325	51163 52883	Toy6N7 Toy6P0	61361 61753	7PP7B ARC5B
28X	196 Pewter Pearl 202 Black	Toy196 Toy202	H9878 F0220	4742 9300	47605 1738SW 8803MS	Toy196 Toy202	70401 79335	4226B TH21B

NOTE: Standox uses the Toyota color code to identify the color.
Example: Toyota color code 056 = Standox 056

For additional information about color matching Toyota vehicles, refer to the repainting section of the Toyota Fundamental Painting procedure manual (part # 00400–BR024) or contact your regional office to obtain information about Toyota Collision Repair and Refinish Training Programs.

COOLANT

CO08J-01

INSPECTION

1. CHECK ENGINE COOLANT LEVEL AT RADIATOR RESERVOIR

The engine coolant level should be between the ”LOW” and ”FULL” lines, when the engine is cold.

If low, check for leaks and add engine coolant up to the ”FULL” line.

2. CHECK ENGINE COOLANT QUALITY

(a) Remove the radiator cap.

CAUTION:

To avoid the danger of being burned, do not remove the radiator cap while the engine and radiator are still hot, as fluid and steam can be blown out under pressure.

(b) There should not be any excessive deposits of rust or scale around the radiator cap or radiator filler hole, and the coolant should be free from oil.

If excessively dirty, replace the coolant.

(c) Reinstall the radiator cap.

CO0ZY-01

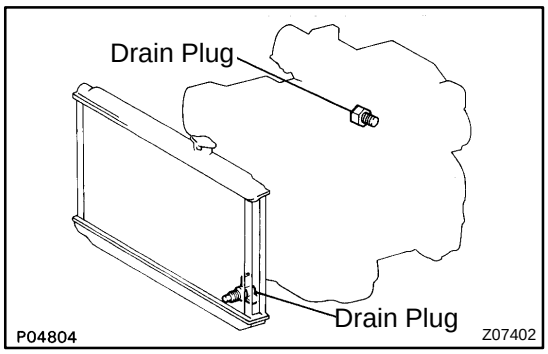

REPLACEMENT

1. DRAIN ENGINE COOLANT

(a) Remove the radiator cap.

CAUTION:

To avoid the danger of being burned, do not remove the radiator cap while the engine and radiator are still hot, as fluid and steam can be blown out under pressure.

(b) Loosen the 2 drain plugs (for the engine and radiator), and drain the coolant.

HINT:

To prevent the coolant from spraying over the cylinder block, connect the rubber hose (inside diameter 6 - 8 mm) in the market to the union pipe under.

(c) Close the drain plugs.

Torque:

Engine drain plug

29 N·m (300 kgf·cm, 22 ft·lbf)

2. FILL ENGINE COOLANT

(a) Slowly fill the system with coolant.

★ Use a good brand of ethylene-glycol base coolant and mix it according to the manufacturer's directions.

★ Using coolant which includes more than 50 % ethylene-glycol (but not more than 70 %) is recommended.

NOTICE:

★ **Do not use an alcohol type coolant.**

★ **The coolant should be mixed with demineralized water or distilled water.**

Capacity (w/ Heater):

	M/T	A/T
2JZ-GE	7.3 liters (7.7 US qts, 6.4 lmp. qts)	8.3 liters (8.8 US qts, 7.3 lmp. qts)
2JZ-GTE	8.9 liters (9.4 US qts, 7.8 lmp. qts)	8.8 liters (9.3 US qts, 7.7 lmp. qts)

(b) Install the radiator cap.

(c) Start the engine, and bleed the cooling system.

(d) Refill the reservoir with coolant until it reaches the "FULL" line.

3. CHECK ENGINE COOLANT FOR LEAKS

WATER PUMP

COMPONENTS

CO08L-02

2JZ-GE

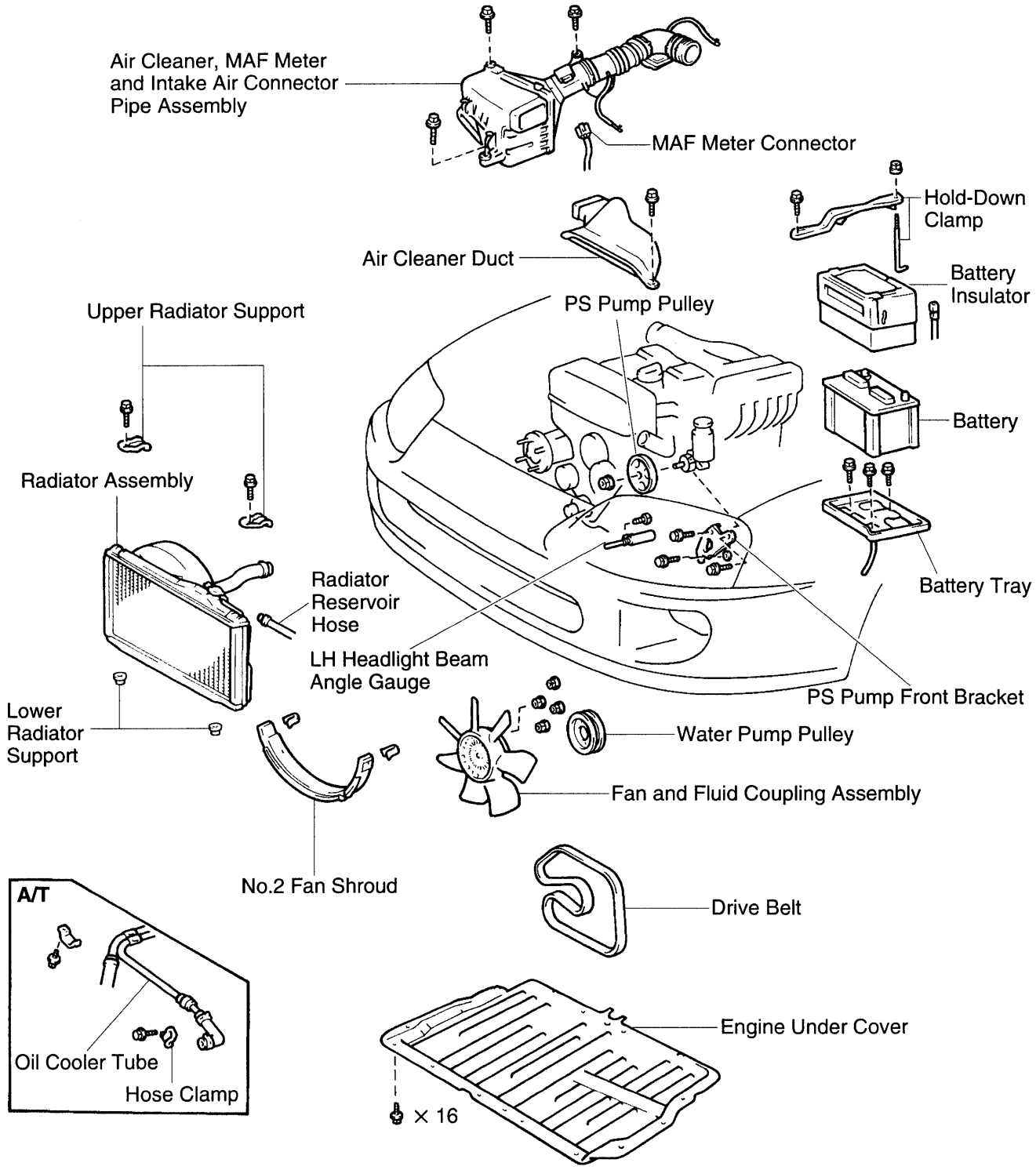

T S00578

2JZ-GE

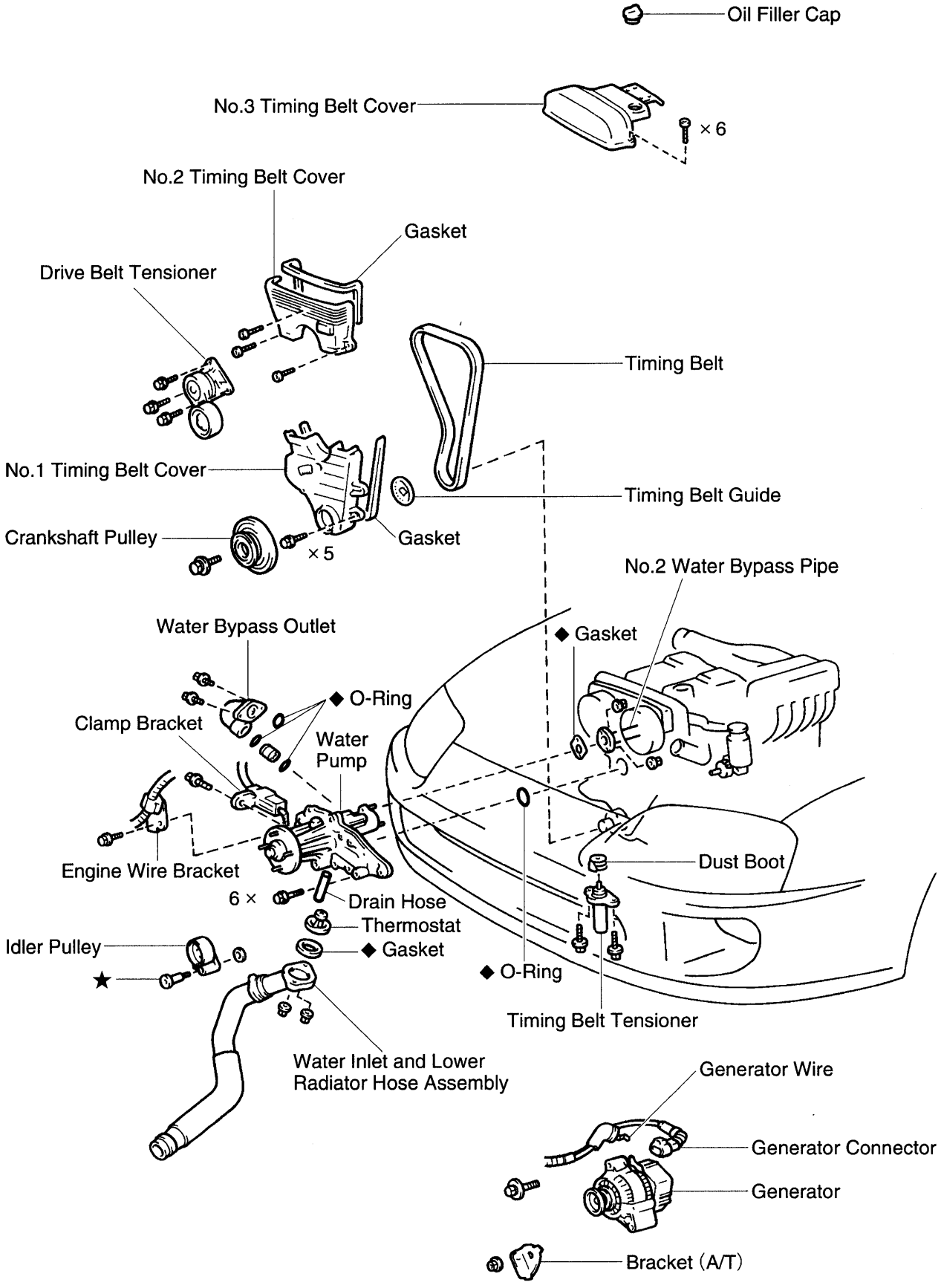
Oil Filler Cap
No.3 Timing Belt Cover
× 6
No.2 Timing Belt Cover
Gasket
Drive Belt Tensioner
Timing Belt
No.1 Timing Belt Cover
Timing Belt Guide
Crankshaft Pulley
Gasket
× 5
No.2 Water Bypass Pipe
Water Bypass Outlet
◆ Gasket
◆ O-Ring
Clamp Bracket
Water Pump
Engine Wire Bracket
Dust Boot
6 ×
Drain Hose
Thermostat
Idler Pulley
◆ Gasket
★
◆ O-Ring
Timing Belt Tensioner
Water Inlet and Lower Radiator Hose Assembly
Generator Wire
Generator Connector
Generator
Bracket (A/T)
◆ Non-reusable part
★ Precoated part
T
S00580

2JZ-GTE

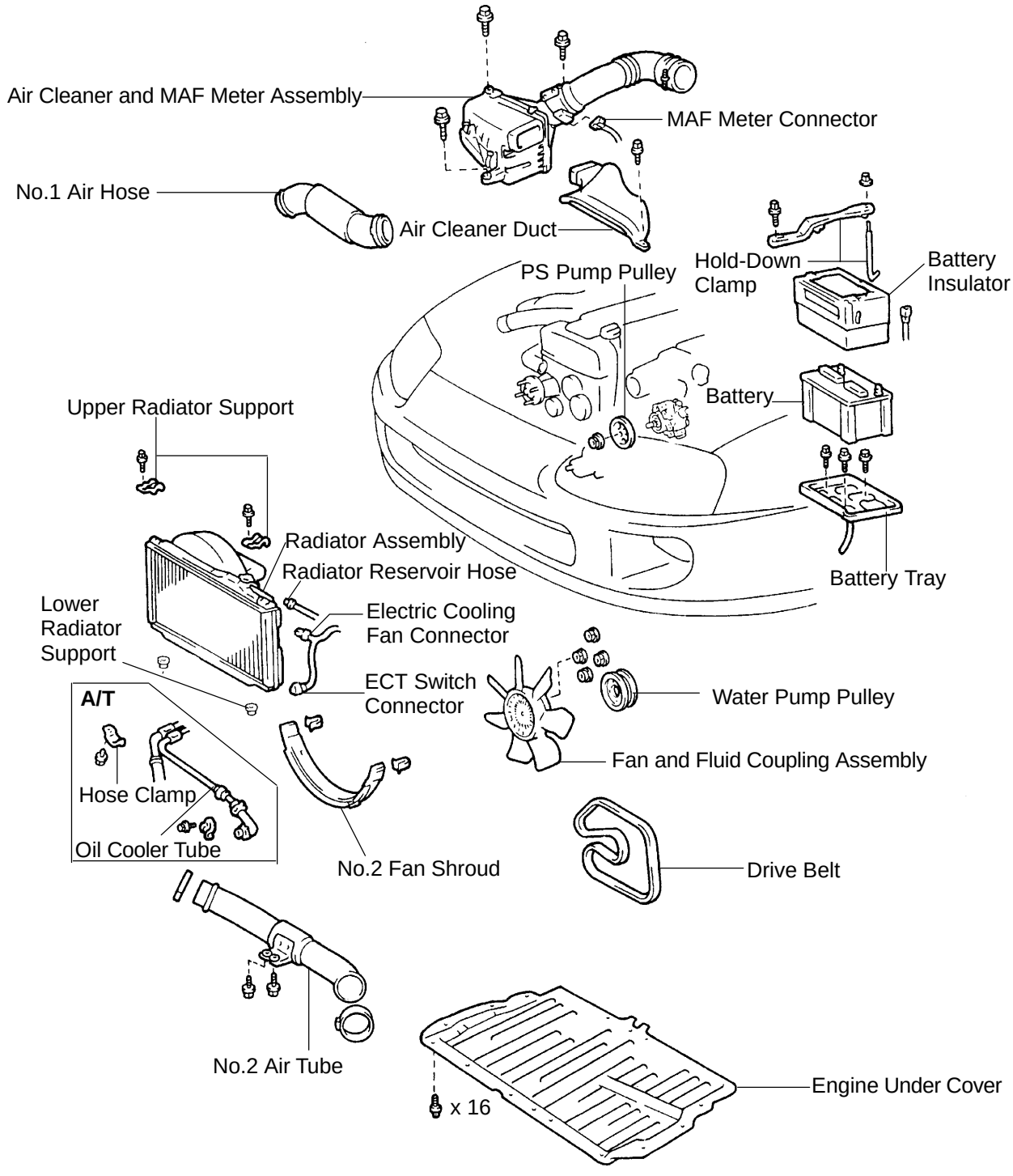

B01771

2JZ-GTE

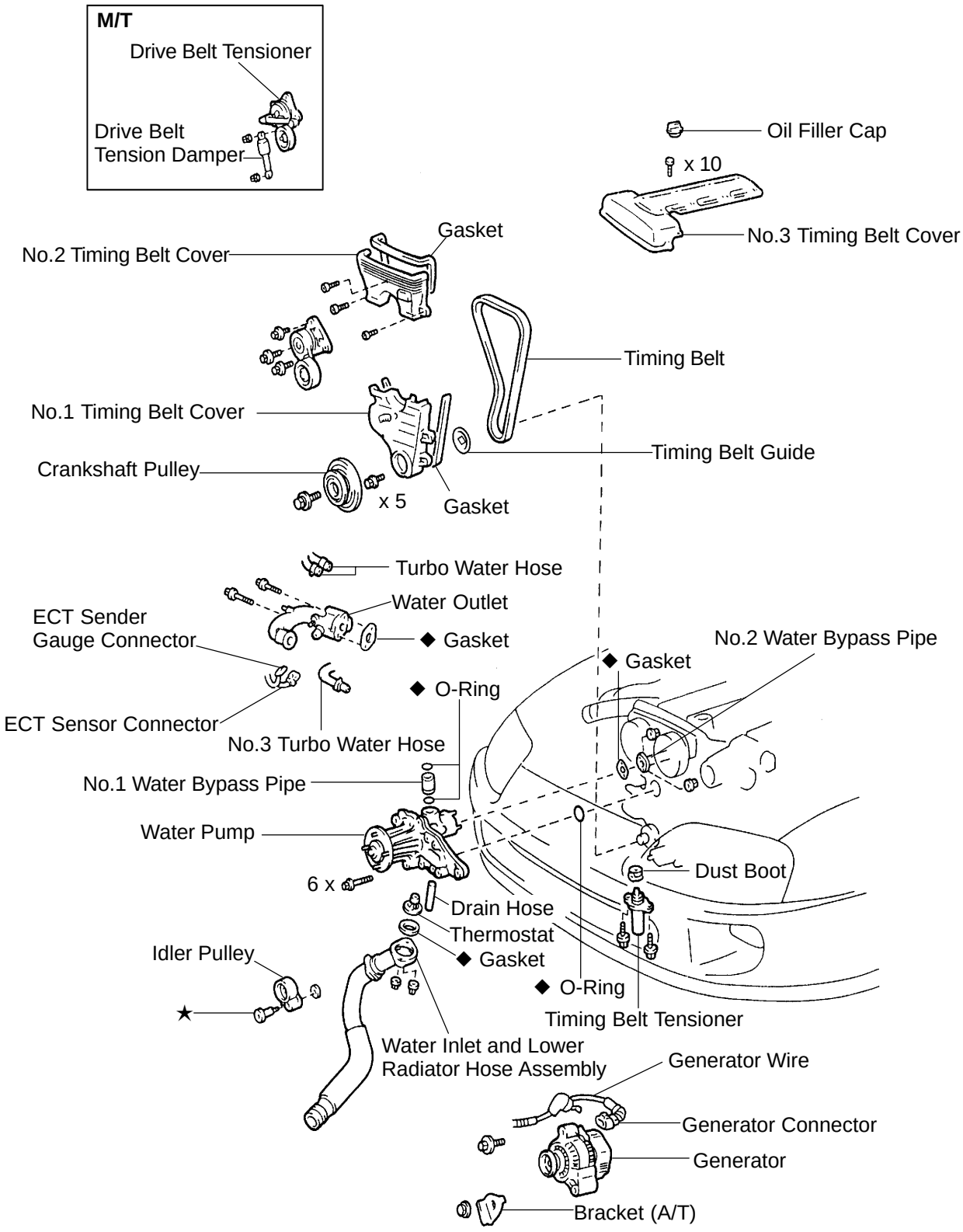

◆Non-reusable part
★Precoated part

B01432

CO08M-02

REMOVAL

1. **2JZ-GTE:**
   REMOVE NO.1 AIR HOSE
2. **2JZ-GE:**
   REMOVE AIR CLEANER, MAF METER AND INTAKE AIR CONNECTOR PIPE ASSEMBLY
   (See page EM-57)
3. **2JZ-GTE:**
   REMOVE AIR CLEANER AND MAF METER ASSEMBLY (See page EM-58)
4. **REMOVE RADIATOR ASSEMBLY**
   (See page CO-22)
5. **2JZ-GTE M/T:**
   REMOVE DRIVE BELT TENSIONER DAMPER
   (See page EM-15)

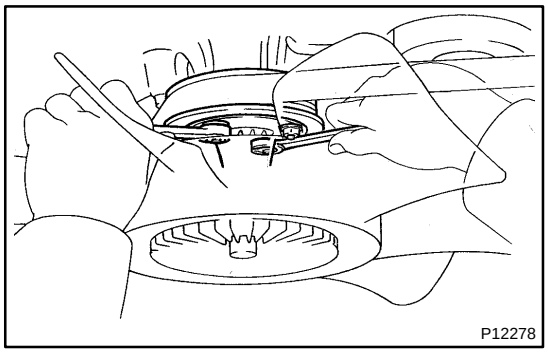

6. **REMOVE DRIVE BELT, FAN, FLUID COUPLING ASSEMBLY AND WATER PUMP PULLEY**

(a) Loosen the 4 nuts holding the fluid coupling to the water pump.

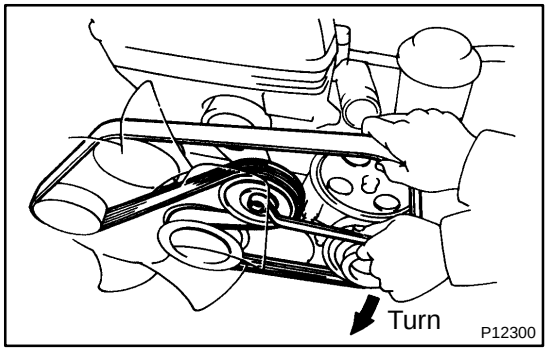

(b) Loosen the drive belt tension by turning the drive belt tensioner clockwise, and remove the drive belt.

(c) Remove the 4 nuts, the fan, fluid coupling assembly and water pump pulley.

7. **REMOVE WATER INLET, LOWER RADIATOR HOSE ASSEMBLY AND THERMOSTAT**
   (See page CO-14)
8. **REMOVE TIMING BELT**
   (2JZ-GE: See page EM-13)
   (2JZ-GTE: See page EM-15)
9. **REMOVE IDLER PULLEY**
   (2JZ-GE: See page EM-13)
   (2JZ-GTE: See page EM-15)
10. **2JZ-GTE:**
    DISCONNECT TURBO WATER HOSES FROM WATER OUTLET

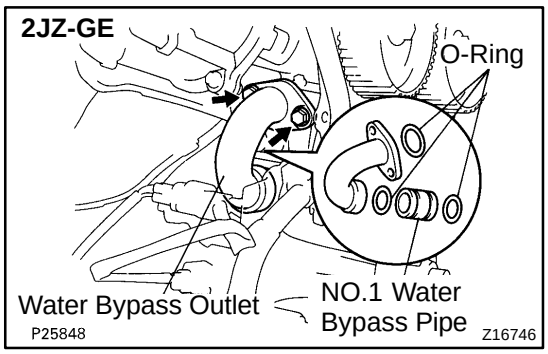

11. 2JZ-GE:
REMOVE WATER BYPASS OUTLET AND NO.1 WATER BYPASS PIPE

(a) Remove the 2 bolts, water bypass outlet and No.1 water bypass pipe.

(b) Remove the 3 O-rings from the water bypass outlet and No.1 water bypass pipe.

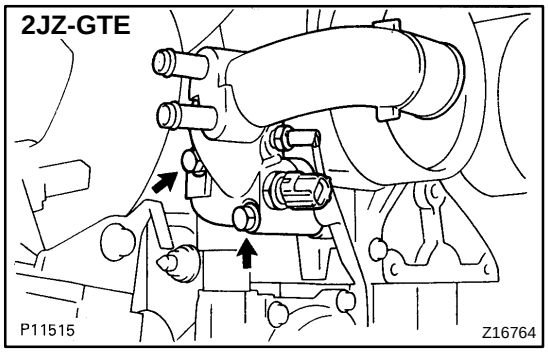

12. 2JZ-GTE:
REMOVE WATER OUTLET AND NO.1 WATER BYPASS PIPE

(a) Disconnect the ECT sensor and sender gauge connectors.

(b) Remove the 2 bolts, water outlet and gasket.

(c) Remove the No.1 water bypass pipe and 2 O-rings.

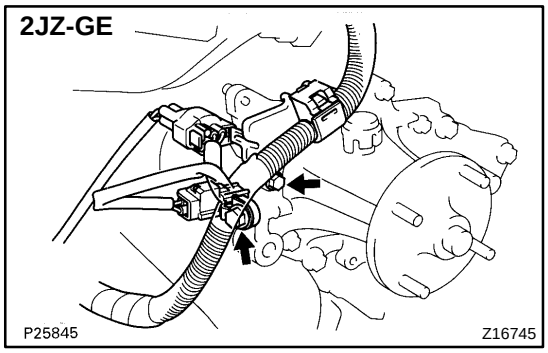

13. REMOVE WATER PUMP

(a) Loosen the nut and remove the bolt, and slightly slide the generator from the water pump.

(b) 2JZ-GE:
Remove the bolt, and disconnect the clamp bracket.

(c) 2JZ-GE:
Remove the bolt, and disconnect the connector bracket (for crankshaft position sensor connector).

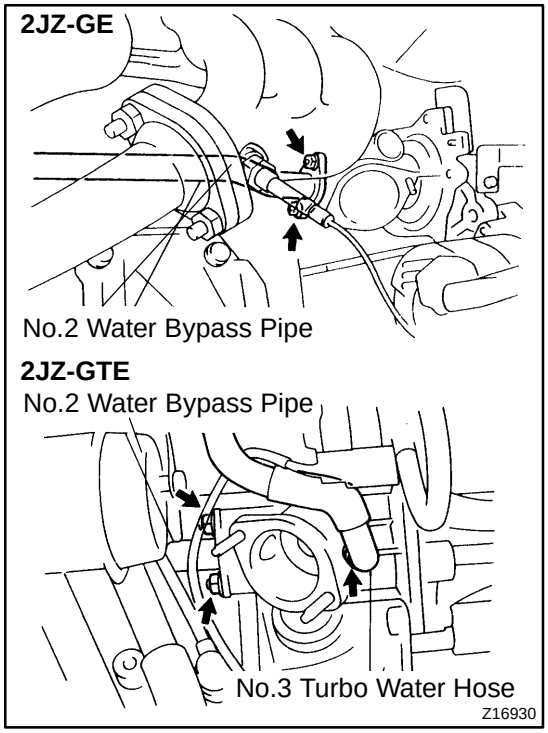

(d) Remove the 2 nuts, and disconnect the No.2 water bypass pipe from the water pump.

(e) 2JZ-GTE:
Disconnect the No.3 turbo water hose from the water pump.

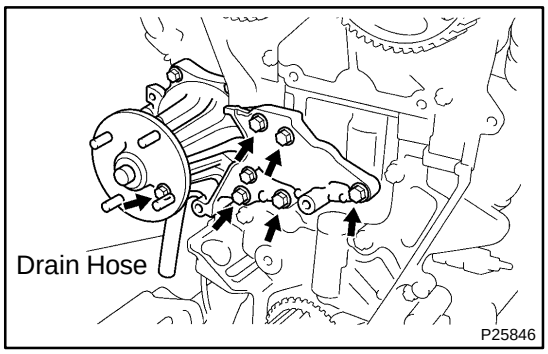

(f) Remove the 6 bolts, water pump and gasket.
(g) Remove the drain hose.
(h) Remove the O-ring from the cylinder block.

CO08N-02

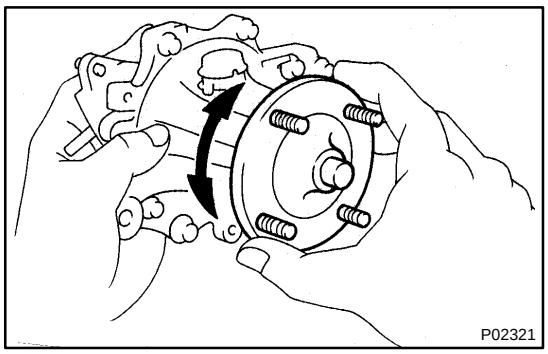

INSPECTION

1. INSPECT WATER PUMP

(a) Turn the pulley seat, and check that the water pump bearing is not rough or noisy.

If necessary, replace the water pump.

(b) Visually check the air hole and drain hose for coolant leakage.

If leakage is found, replace the water pump.

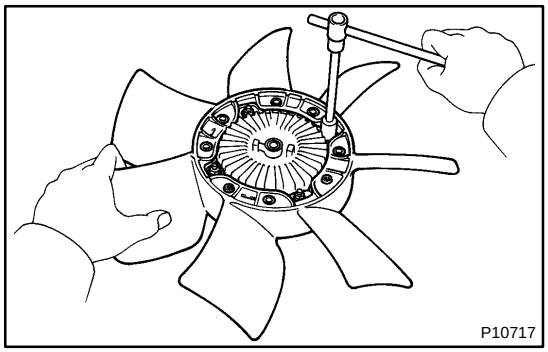

2. INSPECT FLUID COUPLING

(a) Remove the 4 nuts and fan from the fluid coupling.

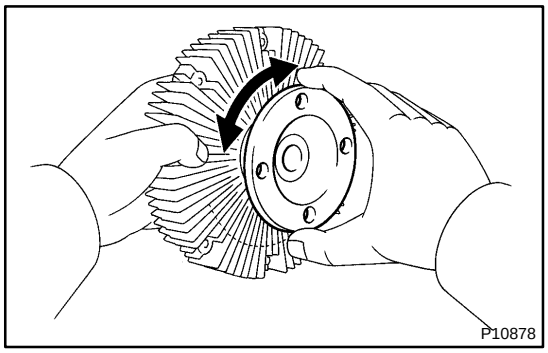

(b) Check that the fluid coupling is not damaged and that no silicon oil leaks.

If necessary, replace the fluid coupling.

(c) Reinstall the fan to the fluid coupling with the 4 nuts.
Torque: 7.4 N·m (75 kgf·cm, 65 in.·lbf)

CO08O-01

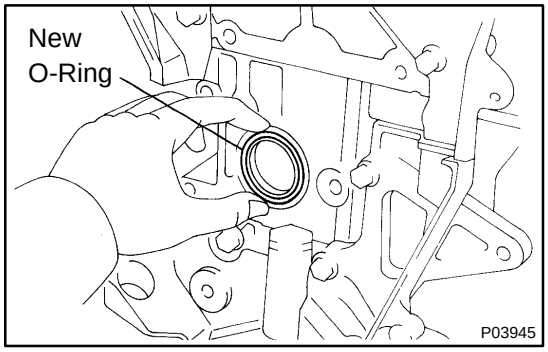

INSTALLATION

1. INSTALL WATER PUMP

(a) Install a new O-ring to the cylinder block.

(b) Install the drain hose.

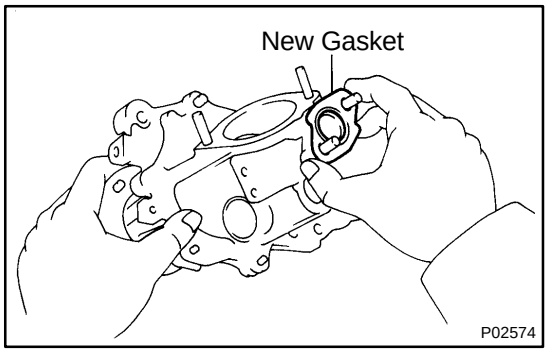

(c) Install a new gasket to the water pump.

(d) Connect the water pump to the water bypass pipe. Do not install the nut yet.

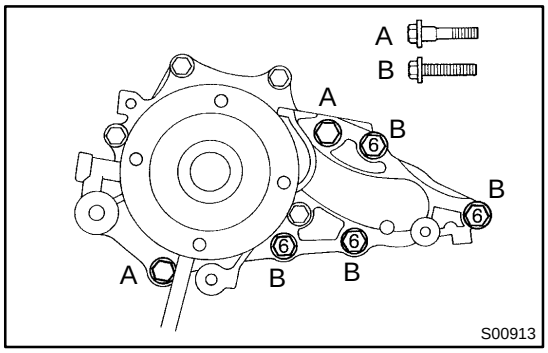

(e) Install the water pump with the 2 bolts (A) and 4 bolts (B).
Torque: 21 N·m (210 kgf·cm, 15 ft·lbf)

HINT:

Hand tighten the (A) bolts first.

(f) Install the 2 nuts holding the No.2 water bypass pipe to the water pump.
Torque: 21 N·m (210 kgf·cm, 15 ft·lbf)

(g) 2JZ-GTE:
Connect the No.3 turbo water hose to the water pump.

(h) 2JZ-GE:
Install the connector bracket (for crankshaft position sensor connector) with the bolt.

(i) 2JZ-GE:
Install the engine clamp bracket with the bolt.

(j) Install the generator with the bolt and nut.
Torque: 40 N·m (400 kgf·cm, 30 ft·lbf)

2. 2JZ-GE:
INSTALL NO.1 WATER BYPASS PIPE AND WATER BYPASS OUTLET

(a) Install 2 new O-rings to the No.1 water bypass pipe.

(b) Install a new O-ring and the water bypass outlet with the 2 bolts.
Torque: 9.0 N·m (90 kgf·cm, 80 in.·lbf)

3. 2JZ-GTE:
INSTALL NO.1 WATER BYPASS PIPE AND WATER OUTLET

(a) Install 2 new O-rings to the No.1 water bypass pipe.

(b) Apply soapy water to the O-rings.

(c) Install the No.1 water bypass pipe to the water pump.

(d) Install a new gasket and the water outlet with the 2 bolts.
Torque: 21 N·m (210 kgf·cm, 15 ft·lbf)

(e) Connect the ECT sensor and sender gauge connectors.

4. 2JZ-GTE:
CONNECT TURBO WATER HOSES TO WATER OUTLET

5. INSTALL IDLER PULLEY AND TIMING BELT
(2JZ-GE: See page EM-19)
(2JZ-GTE: See page EM-21)

6. INSTALL WATER INLET AND LOWER RADIATOR HOSE ASSEMBLY (See page CO-16)

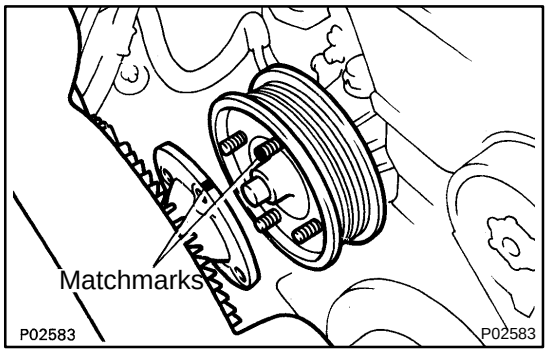

7. INSTALL WATER PUMP PULLEY, FAN, FLUID COUPLING ASSEMBLY AND DRIVE BELT

(a) Align the matchmarks, and install the water pump pulley, the fan and fluid coupling assembly with the 4 nuts.

(b) Install the drive belt by turning the drive belt tensioner clockwise.

(c) Stretch the belt tight, and tighten the 4 nuts.
Torque: 16 N·m (165 kgf·cm, 12 ft·lbf)

8. 2JZ-GTE M/T:
INSTALL DRIVE BELT TENSIONER DAMPER

9. INSTALL RADIATOR ASSEMBLY
(See page CO-28)

10. 2JZ-GE:
INSTALL AIR CLEANER, MAF METER AND INTAKE AIR CONNECTOR PIPE ASSEMBLY

11. 2JZ-GTE:
INSTALL AIR CLEANER AND MAF METER ASSEMBLY

12. 2JZ-GTE:
INSTALL NO.1 AIR HOSE

13. ROAD TEST

Check for abnormal noise, shock, slippage, correct shift points and smooth operation.

THERMOSTAT

COMPONENTS

CO08P-02

2JZ-GE

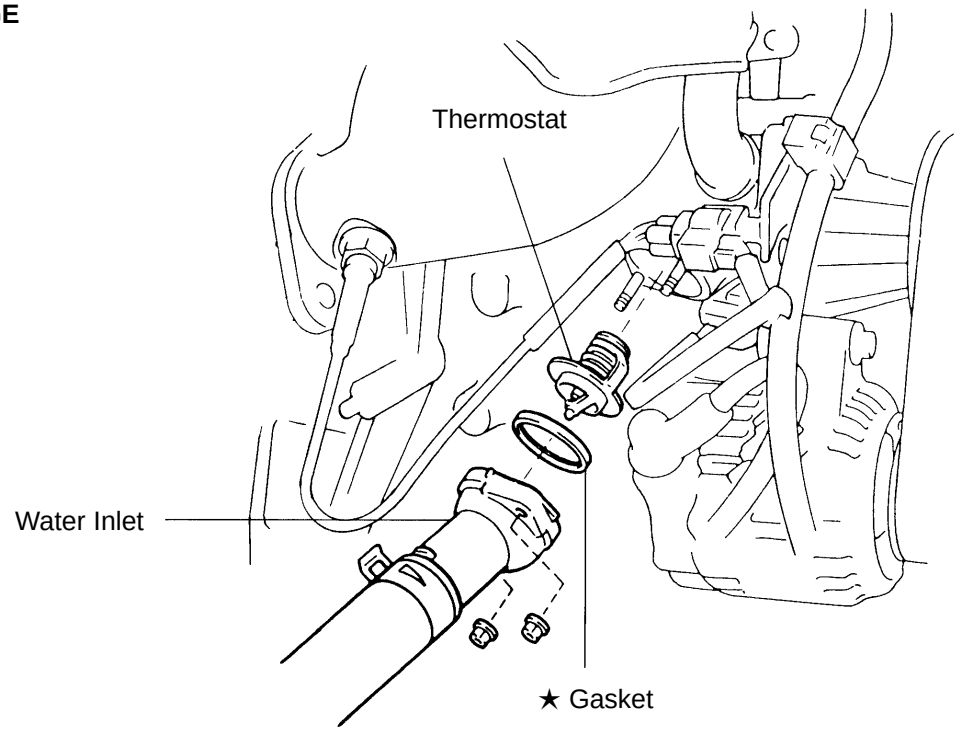

2JZ-GTE

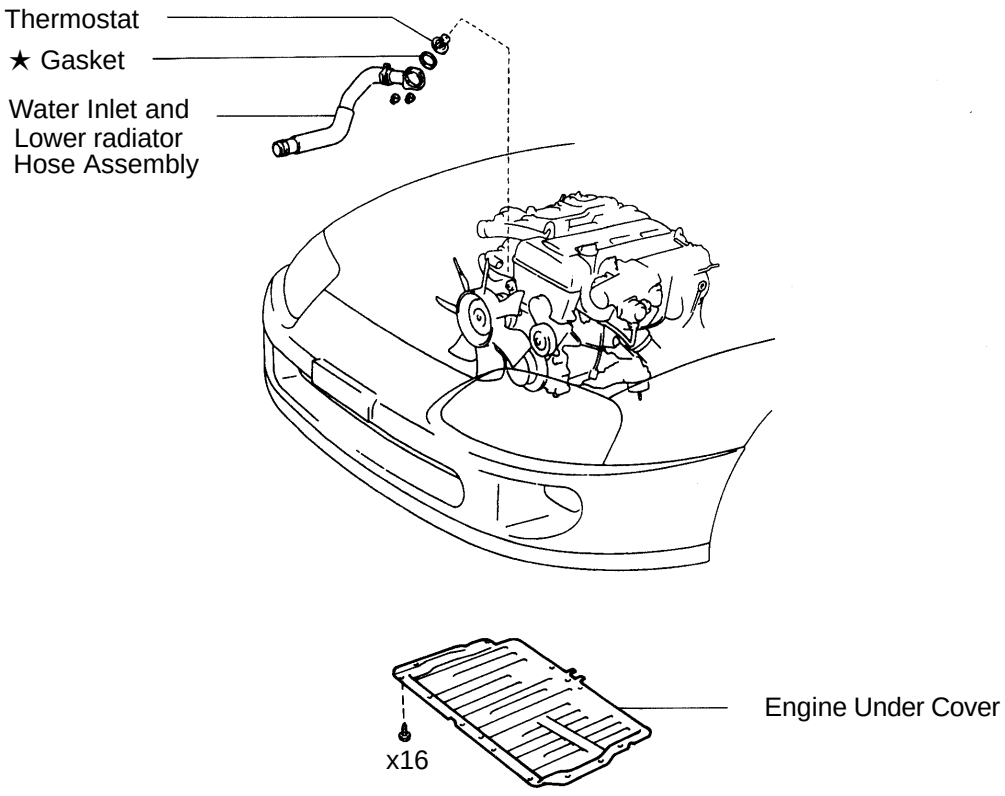

★ Non reusable part

Z16933

CO08Q-01

REMOVAL

HINT:

Removal of the thermostat would have an adverse effect, causing a lowering of cooling efficiency. Do not remove the thermostat, even if the engine tends to overheat.

1. 2JZ-GTE:
REMOVE ENGINE UNDER COVER

2. DRAIN ENGINE COOLANT

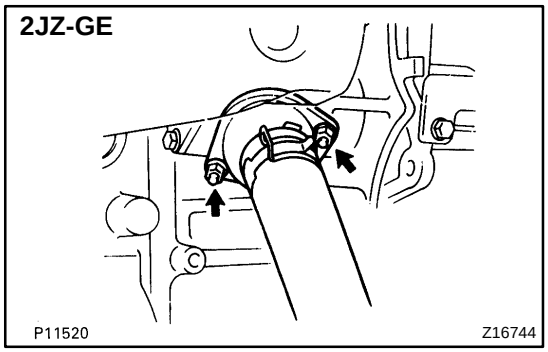

3. 2JZ-GE:
DISCONNECT WATER INLET FROM WATER PUMP, AND REMOVE THERMOSTAT

(a) Remove the 2 nuts holding the water inlet to the water pump, and disconnect the water inlet from the water pump.
(b) Remove the thermostat.
(c) Remove the gasket from the thermostat.

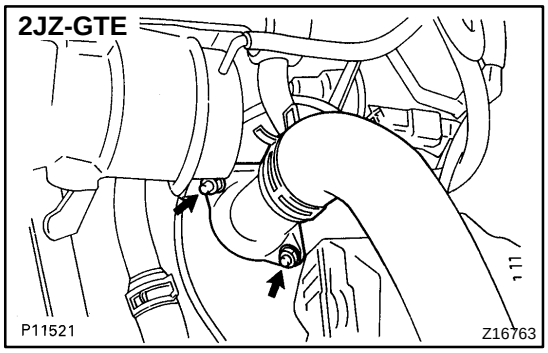

4. 2JZ-GTE:
REMOVE WATER INLET, LOWER RADIATOR HOSE ASSEMBLY AND THERMOSTAT

(a) Disconnect the lower radiator hose from the radiator.
(b) Remove the 2 nuts holding the water inlet to the water pump, and disconnect the water inlet and lower radiator hose from the water pump.
(c) Remove the thermostat.
(d) Remove the gasket from the thermostat.

CO08R-01

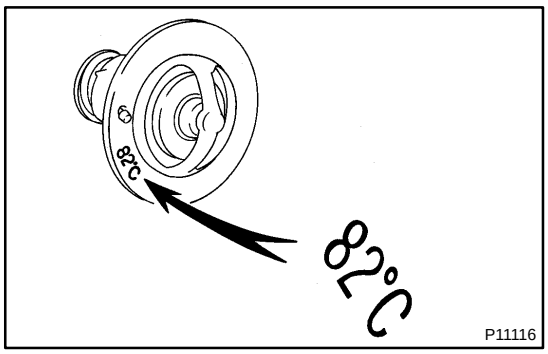

INSPECTION

INSPECT THERMOSTAT

HINT:

The thermostat is numbered with the valve opening temperature.

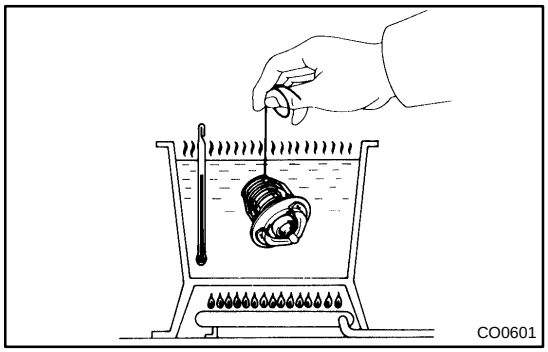

(a) Immerse the thermostat in water and gradually heat the water.

(b) Check the valve opening temperature.

Valve opening temperature:
80 - 84˚C (176 - 183˚F)

If the valve opening temperature is not as specified, replace the thermostat.

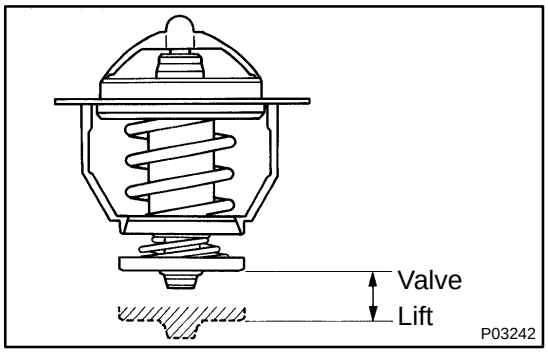

(c) Check the valve lift.

Valve lift: 8.5 mm (0.335 in.) or more at 95˚C (203˚F)

If the valve lift is not as specified, replace the thermostat.

(d) Check that the valve is closed when the thermostat is at low temperatures (below 40˚C (104˚F)).

If not closed, replace the thermostat.

CO08S-01

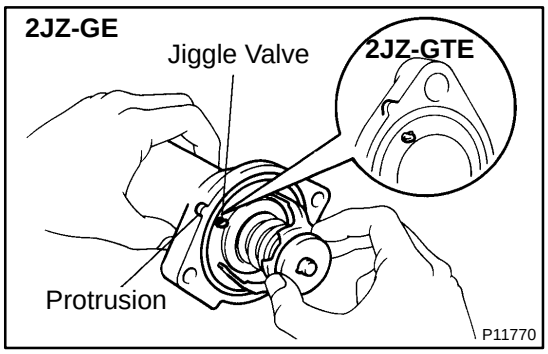

INSTALLATION

1. PLACE THERMOSTAT IN WATER INLET

(a) Install a new gasket to the thermostat.

(b) Align the jiggle valve of the thermostat with the protrusion of the water inlet.

2. INSTALL WATER INLET

(a) Install the water inlet with the 2 nuts.

Torque:
2JZ-GE 8.8 N·m (90 kgf·cm, 78 in.·lbf)
2JZ-GTE 21 N·m (210 kgf·cm, 15 ft·lbf)

(b) 2JZ-GTE:
Connect the lower radiator hose to the radiator.

3. 2JZ-GTE:
INSTALL ENGINE UNDER COVER

4. FILL WITH ENGINE COOLANT

5. START ENGINE AND CHECK FOR COOLANT LEAKS

RADIATOR

CO08T-01

ON-VEHICLE CLEANING

Using water or a steam cleaner, remove any mud and dirt from the radiator core.

NOTICE:

If using a high pressure type cleaner, be careful not to deform the fins of the radiator core. (i. e. Maintain a distance between the cleaner nozzle and radiator core.)

CO08U-01

ON-VEHICLE INSPECTION

1. REMOVE RADIATOR CAP

CAUTION:

To avoid the danger of being burned, do not remove the radiator cap while the engine and radiator are still hot, as fluid and steam can be blown out under pressure.

2. INSPECT RADIATOR CAP

NOTICE:

- ★ **If the radiator cap has contaminations, always rinse it with water.**
- ★ **When performing steps (a) and (b) below, keep the radiator pump tester at an angle of over 30˚ above the horizontal.**

(a) Before using a radiator cap tester, wet the relief valve and pressure valve with engine coolant or water.

(b) Using a radiator cap tester, slowly pump the tester and check that air is coming from the vacuum valve.

Pump speed: 1 push/ (3 seconds or more)

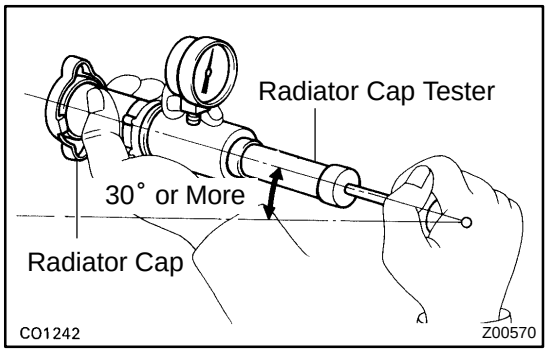

NOTICE:

Push the pump at a constant speed.

If air is not coming from the vacuum valve, replace the radiator cap.

(c) Pump the tester and measure the relief valve opening pressure.

Pump speed: 1 push within 1 second

NOTICE:

This pump speed is for the first pump only (in order to close the vacuum valve). After this, the pump speed can be reduced.

Standard opening pressure:
93 - 123 kPa (0.95 - 1.25 kgf/cm^2, 13.5 - 17.8 psi)
Minimum opening pressure:
78 kPa (0.8 kgf/cm^2, 11.4 psi)

HINT:

Use the tester's maximum reading as the opening pressure.

If the opening pressure is less than minimum, replace the radiator cap.

3. INSPECT COOLING SYSTEM FOR LEAKS

(a) Fill the radiator with coolant, and attach a radiator cap tester.

(b) Warm up the engine.

(c) Pump it to 147 kPa (1.5 kgf/cm^2, 21.3 psi), and check that the pressure does not drop.

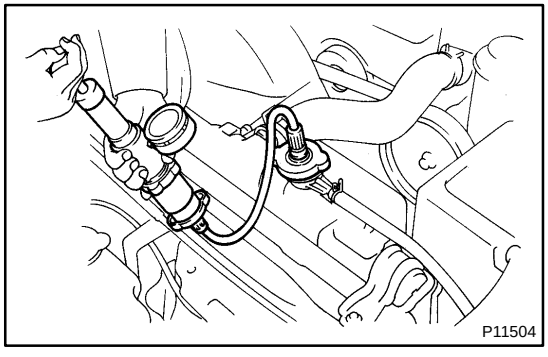

If the pressure drops, check the hoses, radiator or water pump for leaks.

If no external leaks are found, check the heater core, cylinder block and cylinder head.

4. REINSTALL RADIATOR CAP

CO08V-02

COMPONENTS

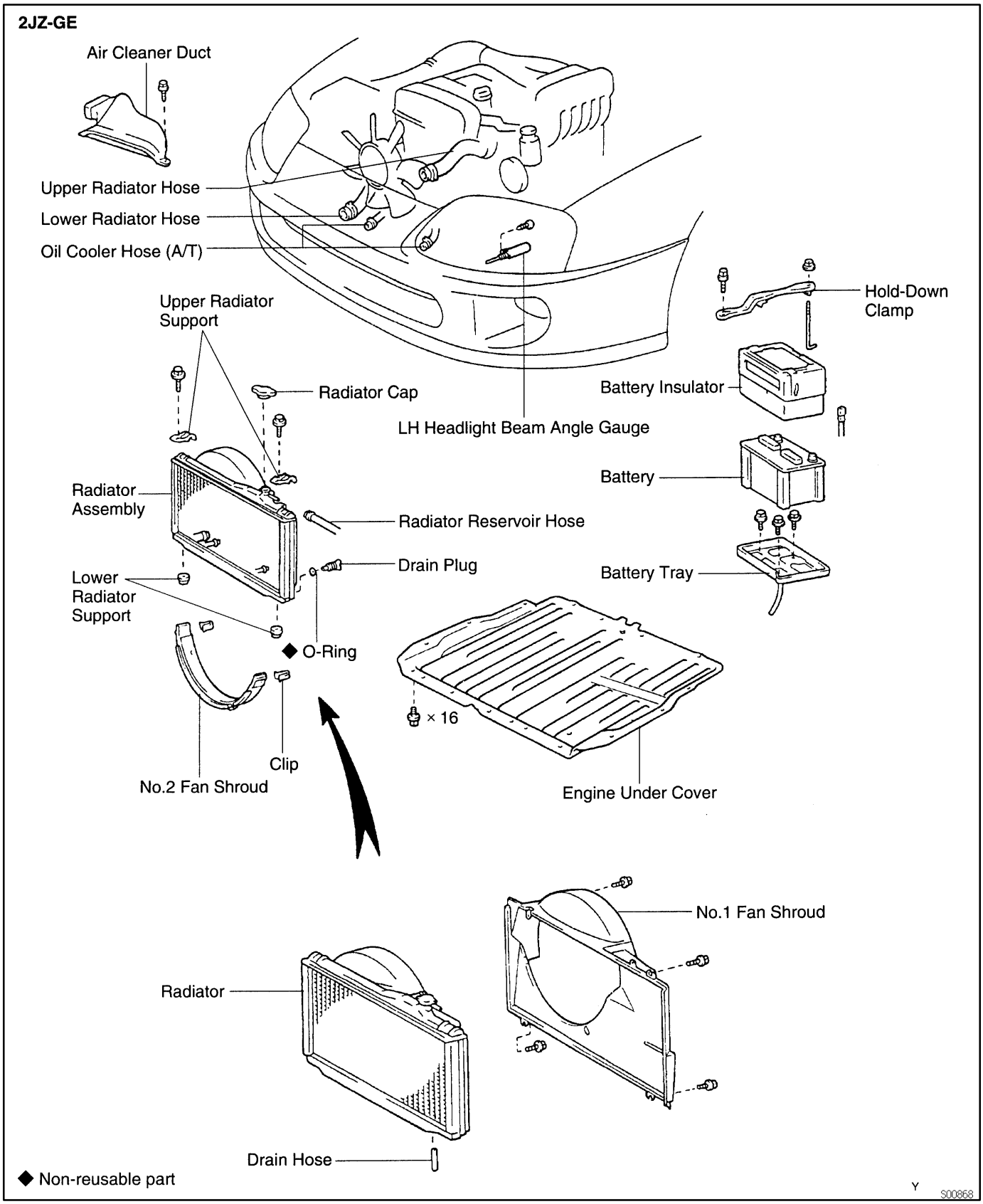

2JZ-GTE

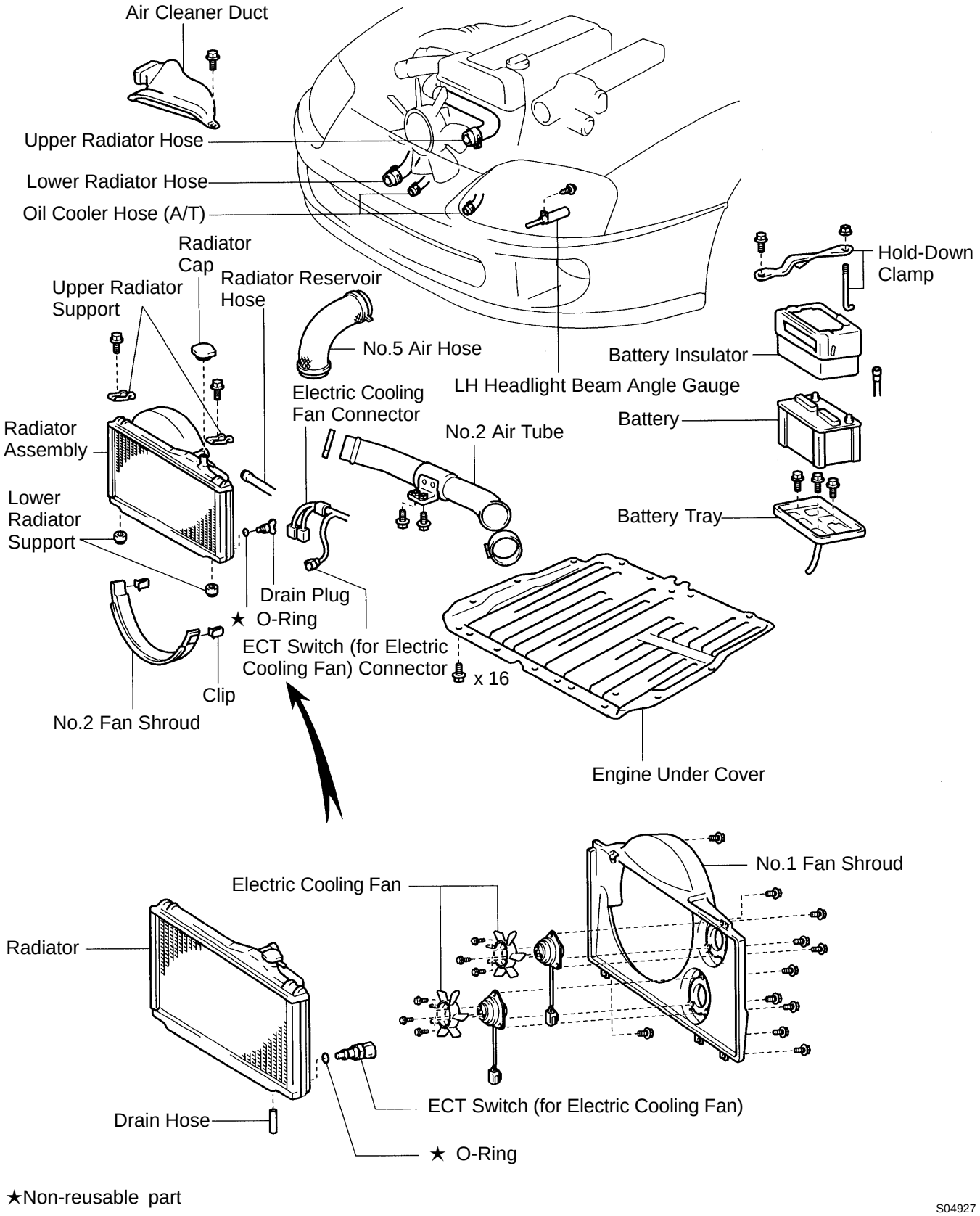

★Non-reusable part

S04927

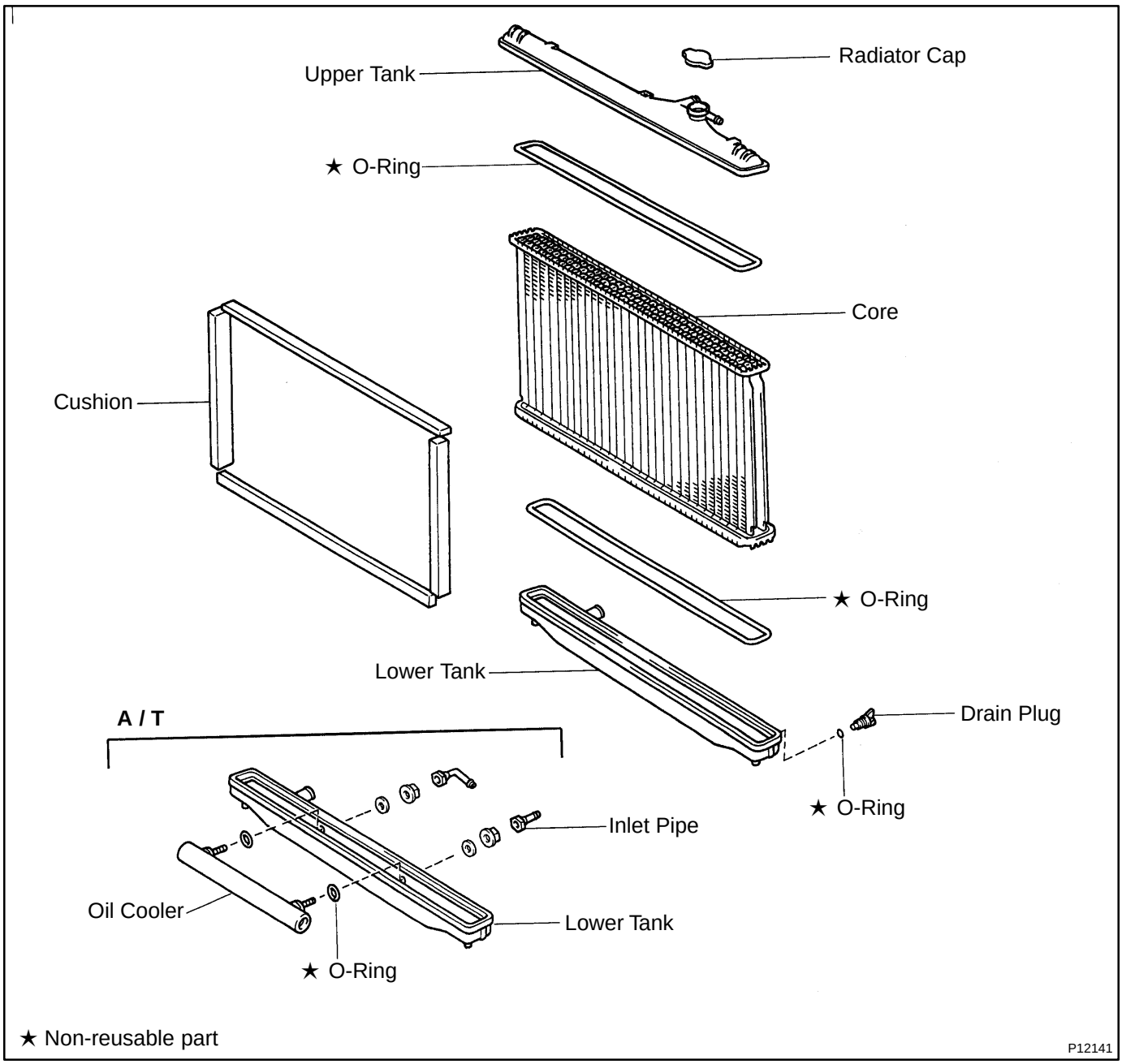
Upper Tank
Radiator Cap
★ O-Ring
Core
Cushion
★ O-Ring
Lower Tank
Drain Plug
A / T
★ O-Ring
Inlet Pipe
Oil Cooler
Lower Tank
★ O-Ring
★ Non-reusable part
P12141

CO0ZZ-01

REMOVAL

1. REMOVE ENGINE UNDER COVER

HINT:

Start the engine, and check for coolant and A/T fluid leaks.

2. REMOVE BATTERY AND BATTERY TRAY

3. DRAIN ENGINE COOLANT

4. 2JZ-GTE:
REMOVE NO.2 AIR TUBE

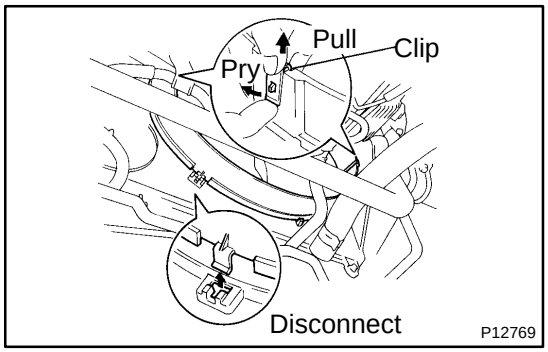

5. REMOVE NO.2 FAN SHROUD

(a) Remove the 2 clips.

(b) Disconnect the claw of the No.2 fan shroud from the hook of the No.1 fan shroud, and remove the No.2 fan shroud.

6. REMOVE AIR CLEANER DUCT

7. 2JZ-GTE:
REMOVE NO.5 AIR HOSE

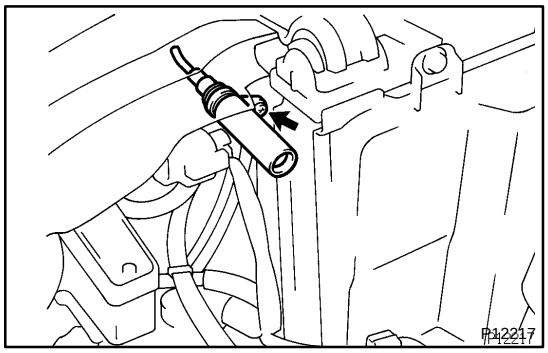

8. REMOVE LH HEADLIGHT BEAM ANGLE GAUGE

Remove the screw and beam angle gauge.

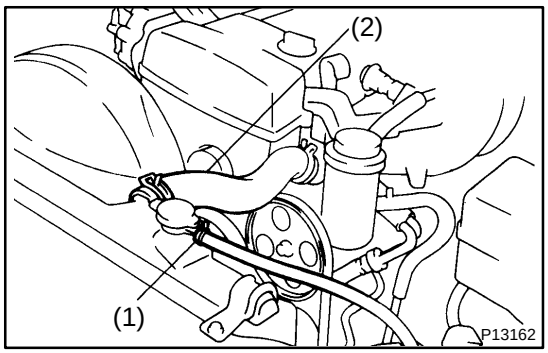

9. DISCONNECT HOSES FROM RADIATOR

Disconnect these hoses from the radiator:

(1) Reservoir inlet hose

(2) Upper radiator hose

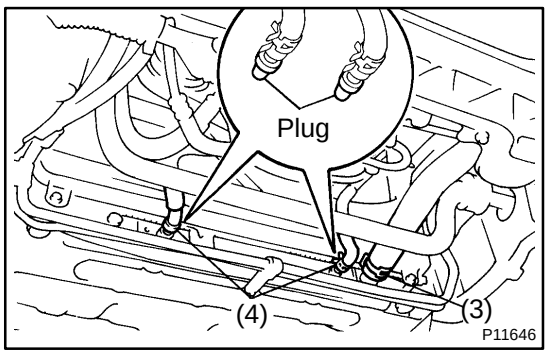

(3) Lower radiator hose

(4) A/T (2 oil cooler hoses):
Plug the hose ends.

HINT:

At the time of installation, please refer to the following items.
Check the A/T fluid level.

10. REMOVE RADIATOR ASSEMBLY

(a) 2JZ-GTE:
Disconnect the ECT switch (for electric cooling fan connector) and wire harness.

(b) 2JZ-GTE:
Disconnect the 2 electric cooling fan connectors and wire harness.

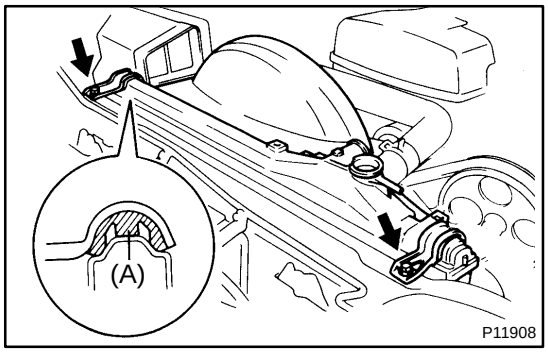

(c) Remove the bolt and upper radiator support. Remove the 2 upper radiator supports.

HINT:
At the time of installation, please refer to the following items.
Check that the rubber cushion (A) of the support is not depressed.

Torque: 15 N·m (155 kgf·cm, 11 ft·lbf)

(d) Lift out the radiator assembly.

(e) Remove the 2 lower radiator supports.

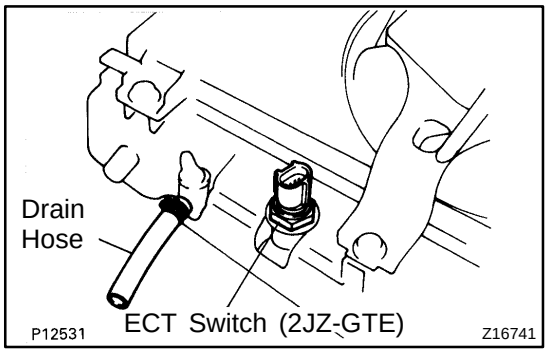

11. REMOVE DRAIN HOSE FROM RADIATOR

12. 2JZ-GTE:
REMOVE ENGINE COOLANT TEMPERATURE (ECT) SWITCH FROM RADIATOR

(a) Remove the ECT switch.

HINT:
At the time of installation, please refer to the following item.
Apply soapy water to the O-ring, and install the ECT switch.

Torque: 7.4 N·m (75 kgf·cm, 65 in.·lbf)

(b) Remove the O-ring from the ECT switch.

HINT:
At the time of installation, please refer to the following item.
Use a new O-ring.

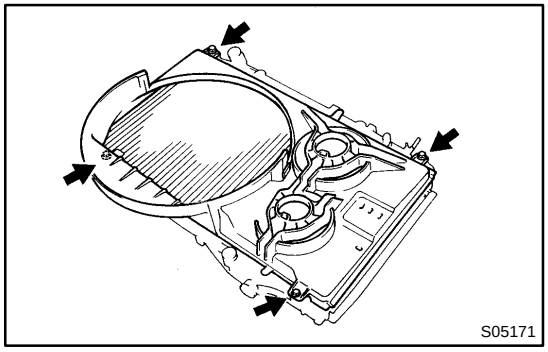

13. REMOVE NO.1 FAN SHROUD FROM RADIATOR

(a) 2JZ-GE:
Remove the 4 bolts and No.1 fan shroud.

(b) 2JZ-GTE:
Remove the 5 bolts and No.1 fan shroud.

CO08X-01

DISASSEMBLY

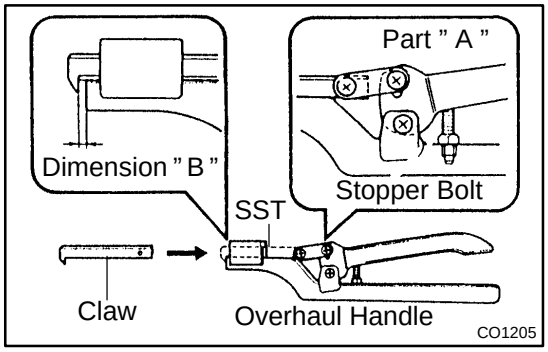

1. REMOVE CUSHIONS FROM RADIATOR

2. ASSEMBLE SST

SST 09230-01010

(a) Install the claw to the overhaul handle, inserting it in the hole in part "A" as shown in the installation.

(b) While gripping the handle, adjust the stopper bolt so that dimension "B" shown in the diagram is 0.2 - 0.5 mm (0.008 - 0.020 in.).

NOTICE:

If this adjustment is not done, the claw may be damaged.

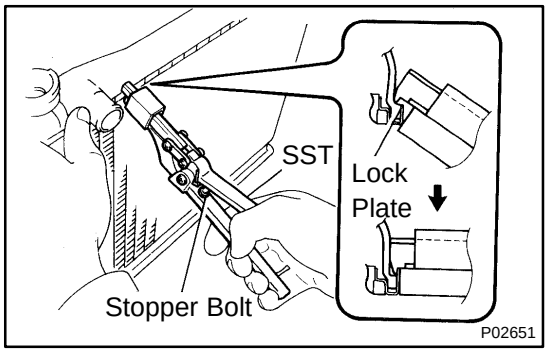

3. UNCAULK LOCK PLATES

Using SST to release the caulking, squeeze the handle until stopped by the stopper bolt.

SST 09230-01010

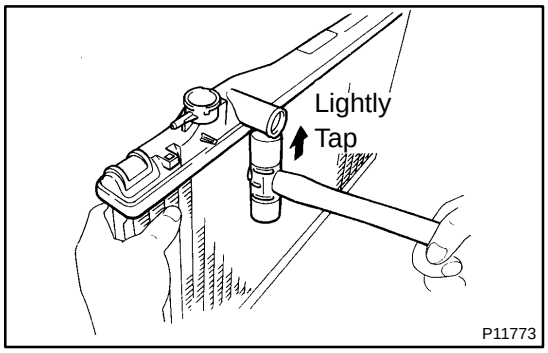

4. REMOVE TANKS AND O-RINGS

(a) Lightly tap the radiator hose inlet (or outlet) with a soft-faced hammer and remove the tank.

(b) Remove the O-ring.

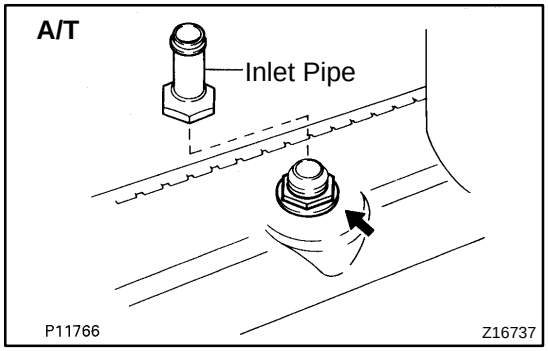

5. A/T:

REMOVE OIL COOLER FROM LOWER TANK

(a) Remove the inlet pipes.

HINT:

Make a note of the direction to face the pipes.

(b) Remove the nuts, plate washers and oil cooler.

(c) Remove the O-rings from the oil cooler.

CO08Y-02

REASSEMBLY

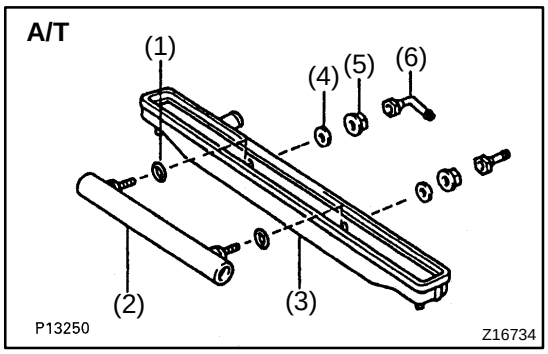

1. A/T:

INSTALL OIL COOLER TO LOWER TANK

(a) Clean the O-ring contact surface of the lower tank and oil cooler.

(b) Install new O-rings (1) to the oil cooler (2).

(c) Install the oil cooler (2) to the lower tank (3).

(d) Install the plate washers (4), and nuts (5).

Torque: 8.3 N·m (85 kgf·cm, 74 in.·lbf)

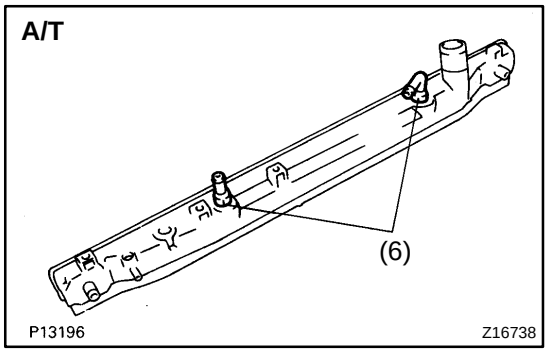

(e) Install the inlet pipes (6).

Torque: 15 N·m (150 kgf·cm, 11 ft·lbf)

HINT:

Face the inlet pipes in the same direction they were before disassembly.

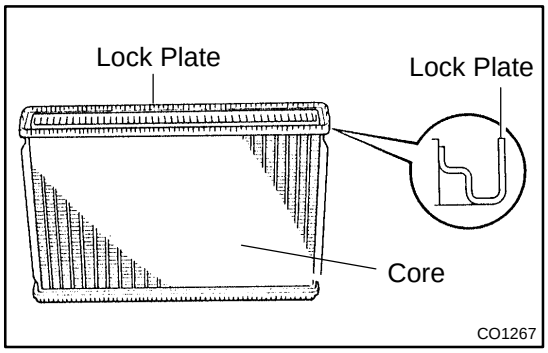

2. INSPECT LOCK PLATE

Inspect the lock plate for damage.

HINT:

★ If the sides of the lock plate groove are deformed, reassembly of the tank will be impossible.

★ Therefore, first correct any deformation with pliers or similar object. Water leakage will result if the bottom of the lock plate groove is damaged or dented. Therefore, repair or replace if necessary.

NOTICE:

The radiator can only be recaulked 2 times.

After the 2nd time, the radiator core must be replaced.

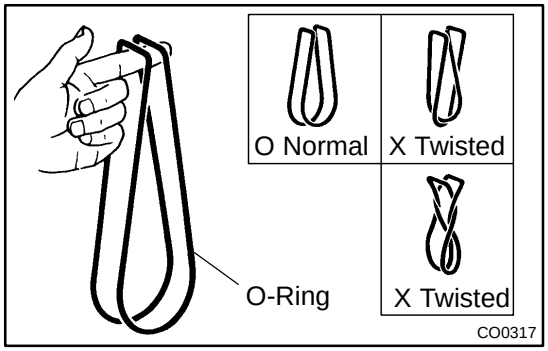

3. INSTALL NEW O-RINGS AND TANKS

(a) After checking that there are no foreign objects in the lock plate groove, install the new O-ring without twisting it.

HINT:

When cleaning the lock plate groove, lightly rub it with sand paper without scratching it.

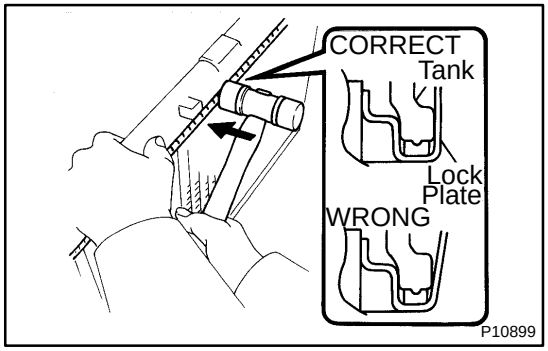

(b) Install the tank without damaging the O-ring.

(c) Tap the lock plate with a soft-faced hammer so that there is no gap between it and the tank.

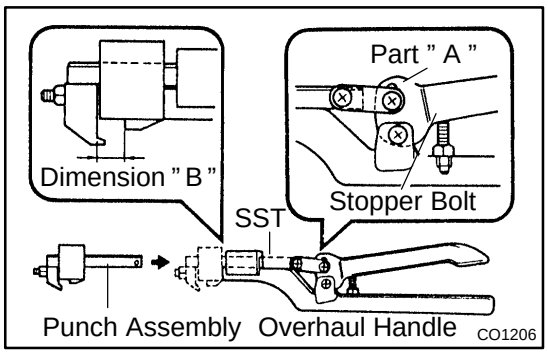

4. ASSEMBLE SST

SST 09230-01010, 09231-14010

(a) Install the punch assembly to the overhaul handle, inserting it in the hole in part "A" as shown in the illustration.

(b) While gripping the handle, adjust the stopper bolt so that dimension "B" shown in the diagram.

Dimension "B":
8.4 mm (0.34 in)

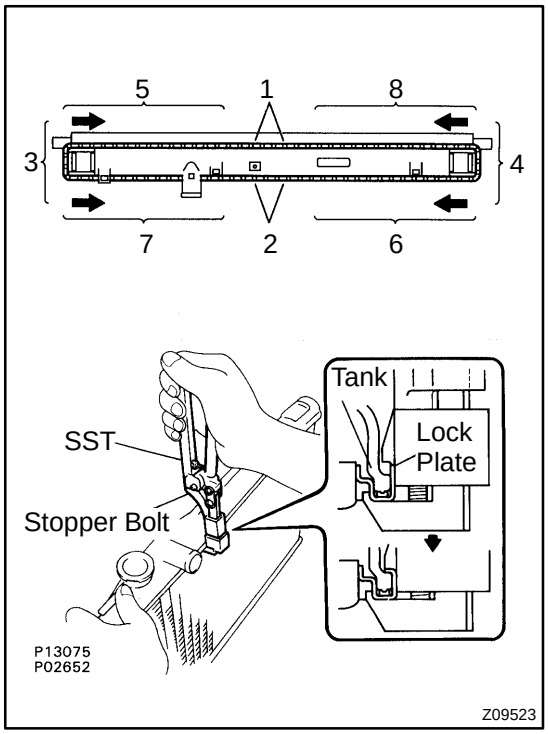

5. CAULK LOCK PLATE

(a) Lightly press SST against the lock plate in the order shown in the illustration. After repeating this a few times, fully caulk the lock plate by squeezing the handle until stopped by the stopper plate.

SST 09230-01010

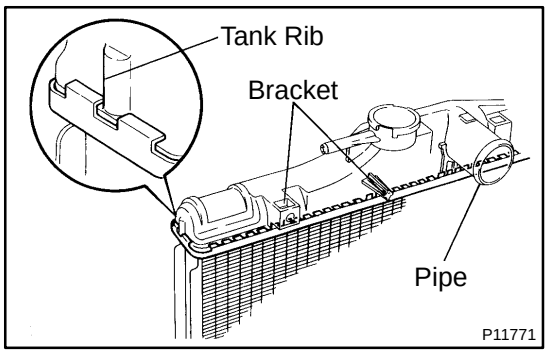

HINT:

★ Do not stake the areas protruding around the pipes, brackets or tank ribs.

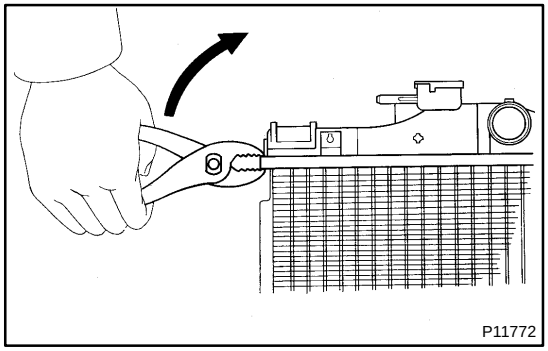

★ The points shown in the rib sides and oil cooler near here cannot be staked with SST. Use a plier or similar object and be careful not to damage the core plates.

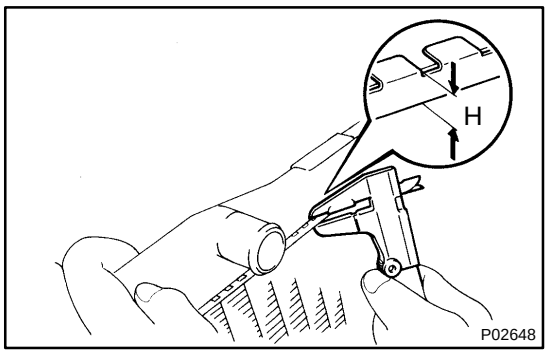

(b) Check the lock plate height (H) after completing the caulking.

Plate height:

7.40 - 7.80 mm (0.2959 - 0.3119 in)

If not within the specified height, adjust the stopper bolt of the handle again and caulk again.

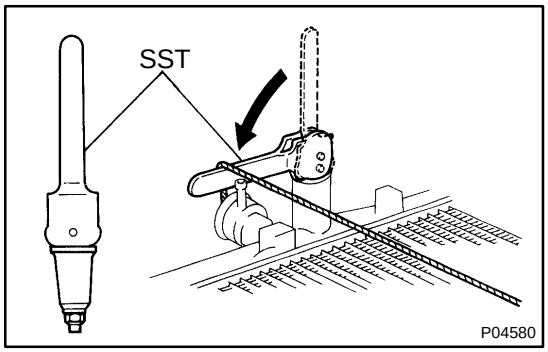

6. INSPECT FOR WATER LEAKS

(a) Tighten the drain plug.

(b) Plug the inlet and outlet pipes of the radiator with SST.

SST 09230-01010

(c) Using a radiator cap tester, apply pressure to the radiator.

Test pressure:

177 kPa (1.8 kgf/cm^2, 26 psi)

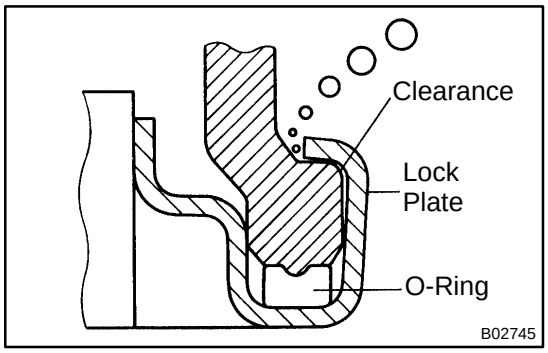

(d) Inspect for water leaks.

HINT:

On radiators with resin tanks, there is a clearance between the tank and lock plate where a minute amount of air will remain, giving the appearance of an air leak when the radiator is submerged in water. Therefore, before doing the water leak test, move the radiator around in the water until all air bubbles disappear.

7. INSTALL CUSHIONS TO RADIATOR

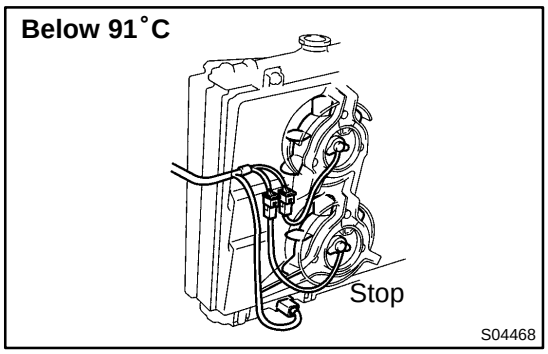

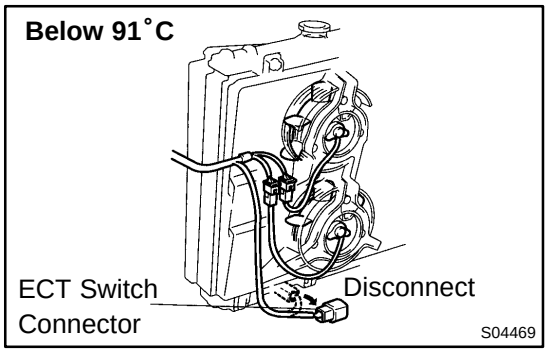

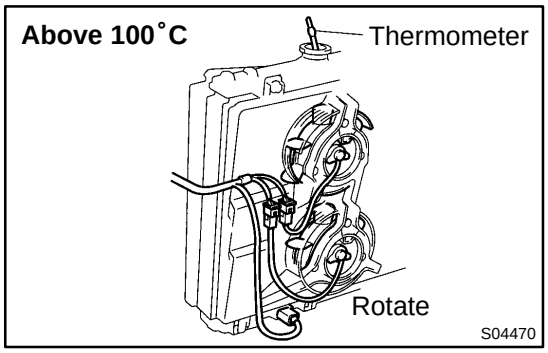

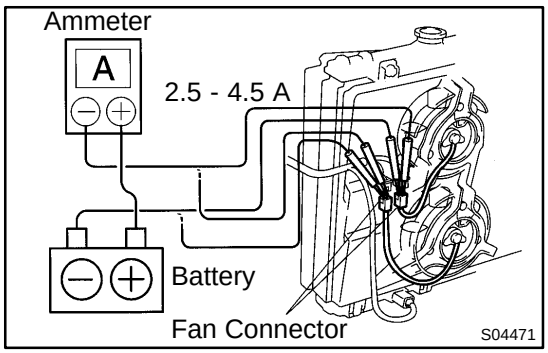

ELECTRIC COOLING FAN (2JZ-GTE)

CO090-01

ON-VEHICLE INSPECTION

1. CHECK COOLING FAN OPERATION WITH LOW TEMPERATURE (Below 91˚C (196˚F))

(a) Turn the ignition switch ON.

(b) Check that the cooling fan stops.

If not, check the cooling fan relay and ECT switch, and check for a separated connector or severed wire between the No.1 radiator fan relay and ECT switch.

(c) Disconnect the ECT switch connector.

(d) Check that the cooling fan rotates.

If not, check the No.1 radiator relay, No.2 radiator fan relay, cooling fan, fuses, and check for short circuit between the No.1 radiator fan relay and ECT switch.

(e) Reconnect the ECT switch connector.

2. CHECK COOLING FAN OPERATION WITH HIGH TEMPERATURE (Above 100˚C (212˚F))

(a) Start the engine, and raise coolant temperature to above 100˚C (212˚F).

(b) Check that the cooling fan rotates.

If not, replace the ECT switch.

3. INSPECT COOLING FAN

(a) Disconnect the fan connector.

(b) Connect battery and ammeter to the cooling fan connector.

(c) Check that the cooling fan rotates smoothly, and check the reading on the ammeter.

Standard amperage: 2.5 - 4.5 A

(d) Reconnect the fan connector.

CO091-02

COMPONENTS

2JZ-GTE

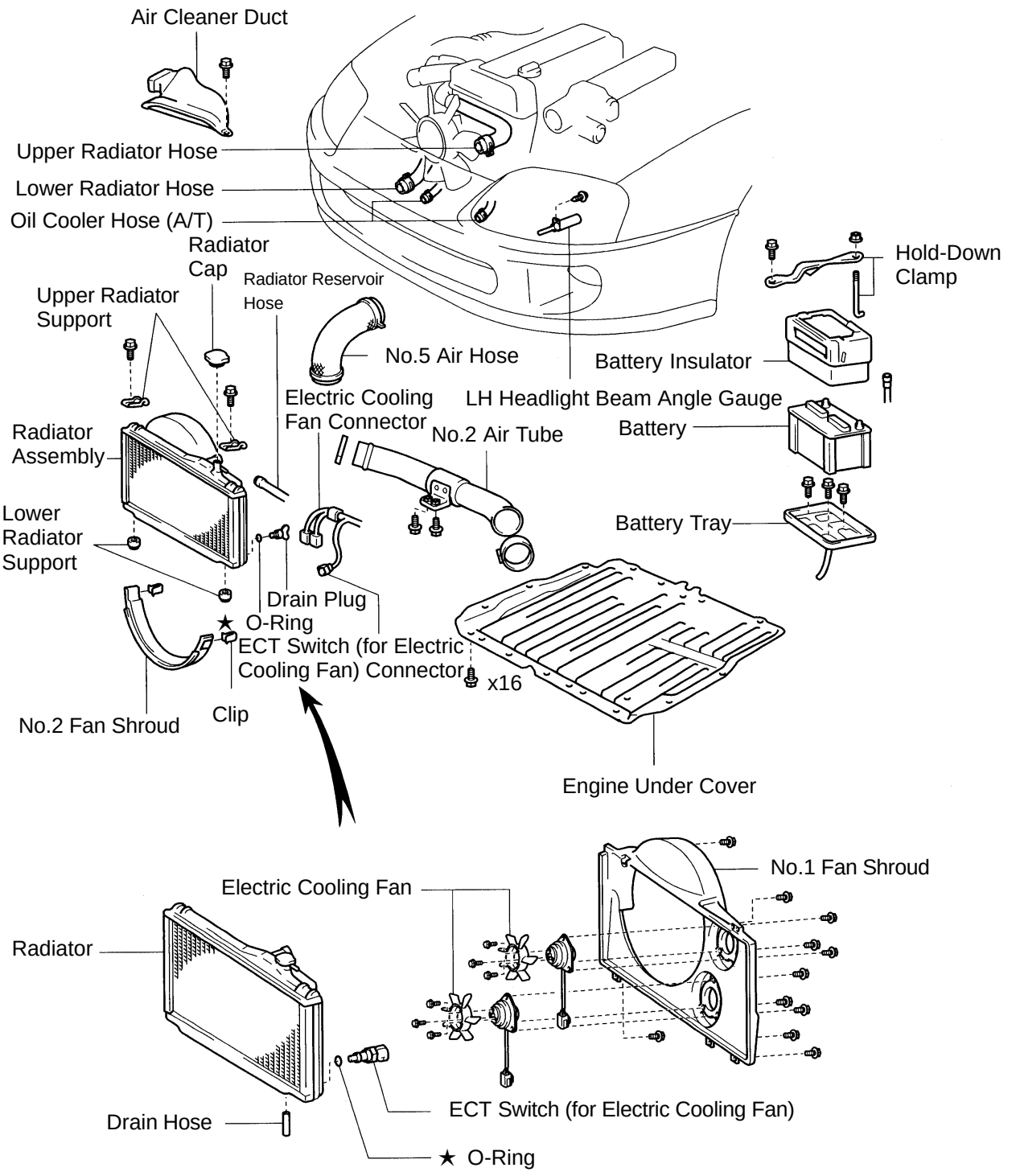

★ Non-reusable part

S04927

CO092-02

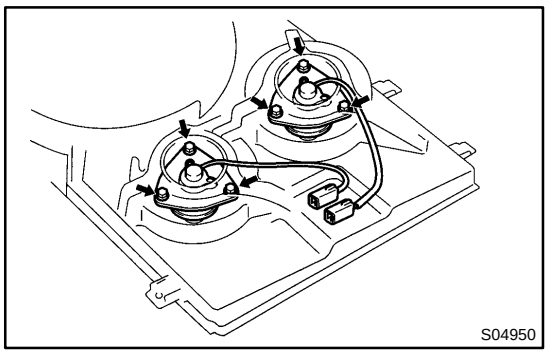

REMOVAL

1. REMOVE RADIATOR (See page CO-22)

2. REMOVE FAN

Remove the 6 screws and 2 fans.

3. REMOVE FAN MOTOR

(a) Disconnect the 2 connectors from the fan shroud.

(b) Remove the 6 screws and 2 fan motors.

NOTICE:

Install the fan motor so that its water drainage hole faces downward.

Torque: 3.9 N·m (40 kgf·cm, 35 in.·lbf)

4. REASSEMBLY IS IN THE REVERSE ORDER OF REMOVAL (See step 3)

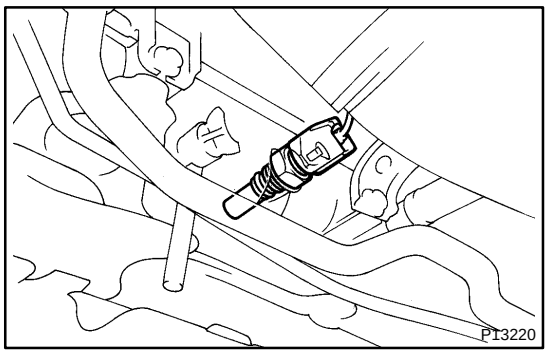

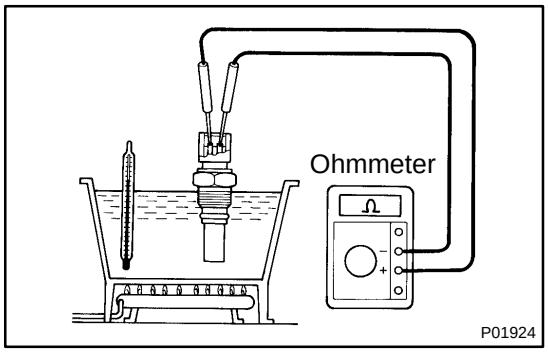

ENGINE COOLANT TEMPERATURE (ECT) SWITCH (2JZ-GTE)

CO094-01

INSPECTION

1. REMOVE ENGINE UNDER COVER

2. DRAIN ENGINE COOLANT

3. REMOVE ECT SWITCH

(a) Disconnect the ECT switch connector.

(b) Remove the ECT switch.

(c) Remove the O-ring from the ECT switch.

4. INSPECT ECT SWITCH

(a) Using an ohmmeter, check that there is no continuity between the terminals when the coolant temperature is above 100˚C (212˚F).

If there is continuity, replace the switch.

(b) Using an ohmmeter, check that there is continuity between the terminals when the coolant temperature is below 91˚C (196˚F).

If there is no continuity, replace the switch.

5. REINSTALL ECT SWITCH

(a) Install a new O-ring to the ECT switch.

(b) Apply soapy water to the O-ring.

(c) Install the ECT switch.

Torque: 7.4 N·m (75 kgf·cm, 65 in.·lbf)

(d) Connect the ECT switch connector.

6. REFILL WITH ENGINE COOLANT

7. START ENGINE AND CHECK FOR LEAKS

8. REINSTALL ENGINE UNDER COVER

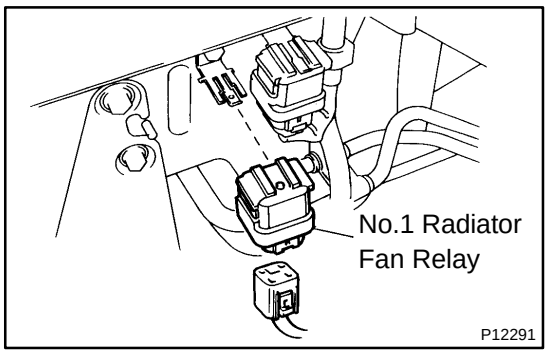

RADIATOR FAN RELAY (2JZ-GTE)

CO095-01

INSPECTION

1. w/ Auto Spoiler:
REMOVE LH HEADLIGHT

2. w/o Auto Spoiler:
REMOVE ENGINE UNDER COVER

3. INSPECT NO.1 RADIATOR FAN RELAY

(a) Remove the No.1 radiator fan relay. (Marking: RADIATOR FAN RELAY)

(b) Inspect the No.1 radiator fan relay continuity.

(1) Using an ohmmeter, check that there is continuity between terminals 3 and 4.

If there is no continuity, replace the relay.

(2) Check that there is no continuity between terminals 1 and 2.

If there is continuity, replace the relay.

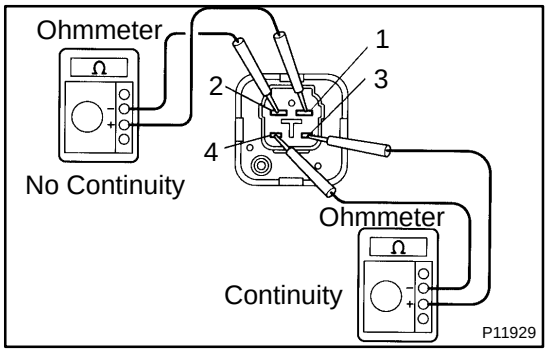

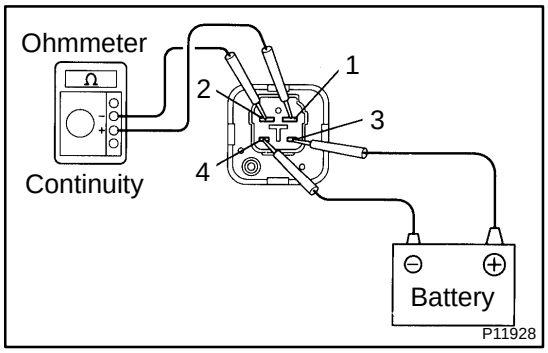

(c) Inspect the No.1 radiator fan relay operation.

(1) Apply battery positive voltage across terminals 3 and 4.

(2) Using an ohmmeter, check that there is continuity between terminals 1 and 2.

If there is no continuity, replace the relay.

(d) Reinstall the No.1 radiator fan relay

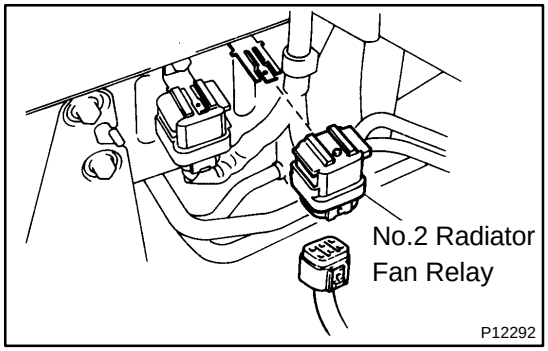

4. INSPECT NO.2 RADIATOR FAN RELAY

(a) Remove the No.2 radiator fan relay. (Marking: A.B.S.(TRAC) RELAY)

(b) Inspect the No. 2 radiator fan relay continuity.

(1) Using an ohmmeter, check that there is continuity between terminals 1 and 6.

If there is no continuity, replace the relay.

(2) Check that there is continuity between terminals 3 and 5.

If there is no continuity, replace the relay.

(c) Check that there is no continuity between terminals 2 and 5.

If there is continuity, replace the relay.

(d) Inspect the No.2 radiator fan relay operation.

(e) Apply battery positive voltage across terminals 1 and 6.

(1) Using an ohmmeter, check that there is no continuity between terminals 3 and 5.

(2) If there is continuity, replace the relay.

(3) Check that there is continuity between terminals 2 and 5.

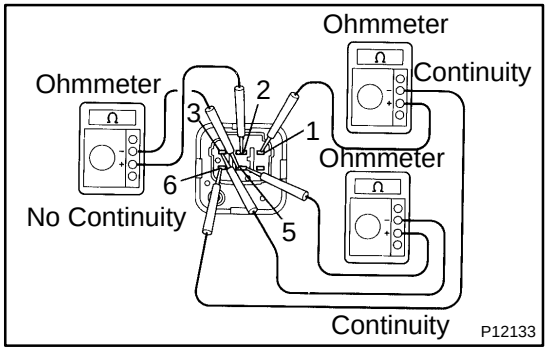

ENGINE (2JZ-GTE)

DI4SF-01

HOW TO PROCEED WITH TROUBLESHOOTING

Troubleshoot in accordance with the produce on the following page.

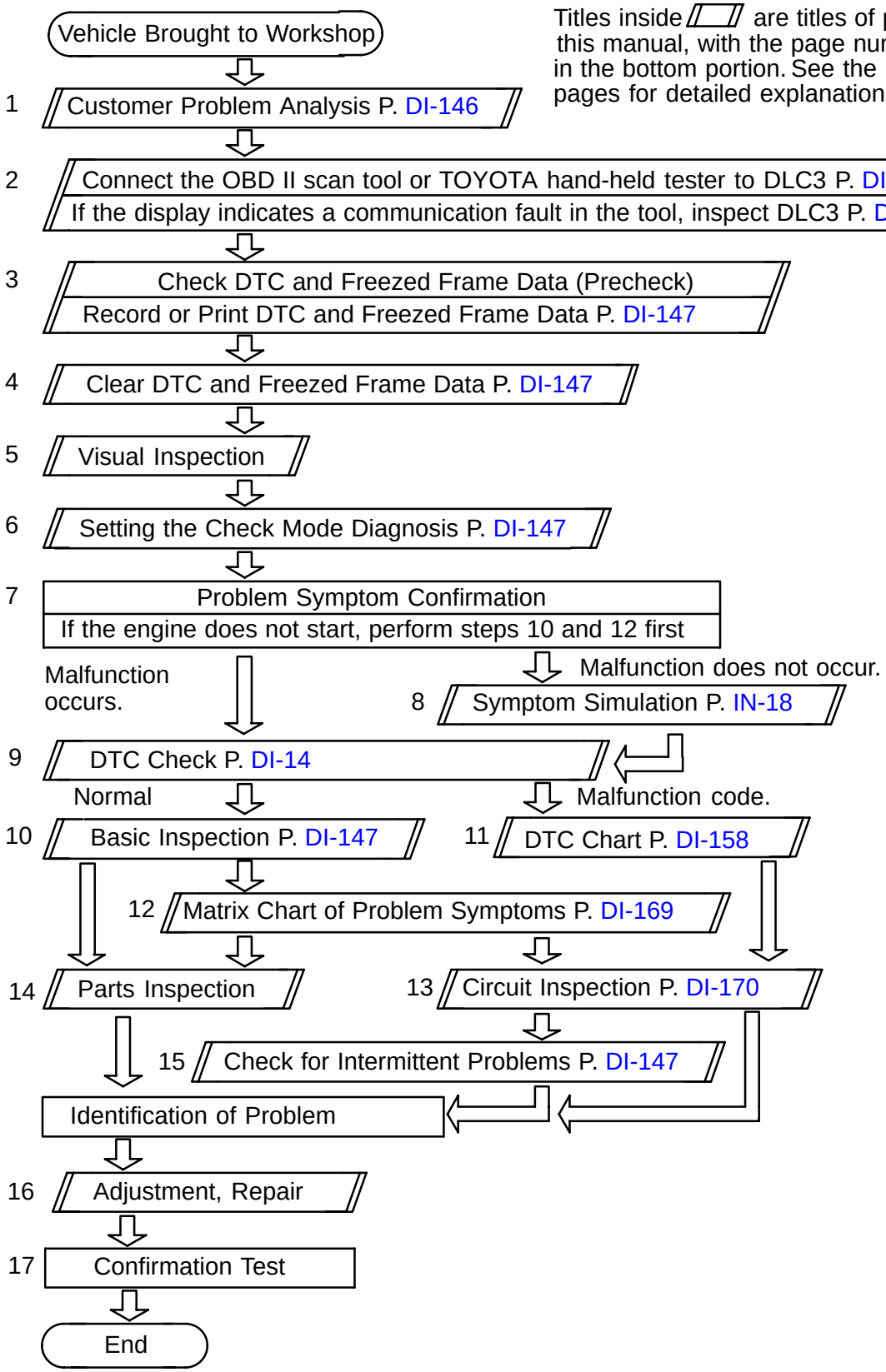

Titles inside ▱ are titles of pages in this manual, with the page number indicated in the bottom portion. See the indicated pages for detailed explanations.

DI4SG-01

CUSTOMER PROBLEM ANALYSIS CHECK

ENGINE CONTROL SYSTEM Check Sheet

Inspector's Name _____

Customer's Name		**Model and Model Year**	
Driver's Name		**Frame No.**	
Date Vehicle Brought in		**Engine Model**	
License No.		**Odometer Reading**	km miles

Problem Symptoms	☐ **Engine does not Start**	☐ **Engine does not crank** ☐ **No initial combustion** ☐ **No complete combustion**
	☐ **Difficult to Start**	☐ **Engine cranks slowly** ☐ **Other** _____
	☐ **Poor Idling**	☐ **Incorrect first idle** ☐ **Idling rpm is abnormal** ☐ **High (rpm)** ☐ **Low (rpm)** ☐ **Rough idling** ☐ **Other** _____
	☐ **Poor Driveability**	☐ **Hesitation** ☐ **Back fire** ☐ **Muffler explosion (after-fire)** ☐ **Surging** ☐ **Knocking** ☐ **Other** _____
	☐ **Engine Stall**	☐ **Soon after starting** ☐ **After accelerator pedal depressed** ☐ **After accelerator pedal released** ☐ **During A/C operation** ☐ **Shifting from N to D** ☐ **Other** _____
	☐ **Others**	

Dates Problem Occurred		
Problem Frequency		☐ **Constant** ☐ **Sometimes (times per day/month)** ☐ **Once only** ☐ **Other** _____
Condition When Problem Occurs	**Weather**	☐ **Fine** ☐ **Cloudy** ☐ **Rainy** ☐ **Snowy** ☐ **Various/Other** _____
	Outdoor Temperature	☐ **Hot** ☐ **Warm** ☐ **Cool** ☐ **Cold (approx. ____˚F/____˚C)**
	Place	☐ **Highway** ☐ **Suburbs** ☐ **Inner city** ☐ **Uphill** ☐ **Downhill** ☐ **Rough road** ☐ **Other** _____
	Engine Temp.	☐ **Cold** ☐ **Warming up** ☐ **After warming up** ☐ **Any temp.** ☐ **Other** _____
	Engine Operation	☐ **Starting** ☐ **Just after starting (min.)** ☐ **Idling** ☐ **Racing** ☐ **Driving** ☐ **Constant speed** ☐ **Acceleration** ☐ **Deceleration** ☐ **A/C switch ON/OFF** ☐ **Other** _____

Condition of MIL		☐ **Remains on** ☐ **Sometimes light up** ☐ **Does not light up**
DTC Inspection	**Normal Mode (Precheck)**	☐ **Normal** ☐ **Malfunction code(s) (code)** ☐ **Freezed frame data ( )**
	Check Mode	☐ **Normal** ☐ **Malfunction code(s) (code)** ☐ **Freezed frame data ( )**

DI4SH-01

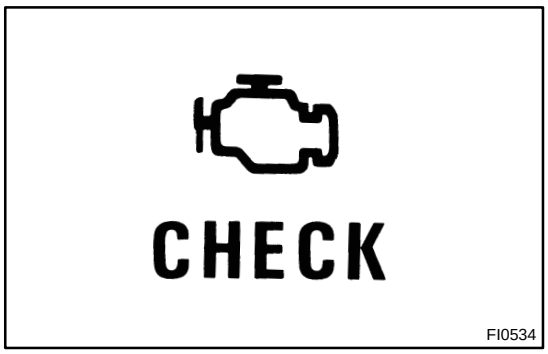

PRE-CHECK

1. DIAGNOSIS SYSTEM

(a) Description

When troubleshooting OBD II vehicles, the only difference from the usual troubleshooting procedure is that you connect to the vehicle the OBD II scan tool complying with SAE J1978 or TOYOTA hand-held tester, and read off various data output from the vehicle's ECM.

OBD II regulations require that the vehicle's on-board computer lights up the Malfunction Indicator Lamp (MIL) on the instrument panel when the computer detests a malfunction in the computer itself or in drive system components which affect vehicle emissions. In addition to the MIL lighting up when a malfunction is detected, the applicable Diagnostic Trouble Codes (DTC) prescribed by SAE J2012 are recorded in the ECM memory.

(See page DI-158)

If the malfunction does not reoccur in 3 trips, the MIL goes off but the DTC remain recorded in the ECM memory.

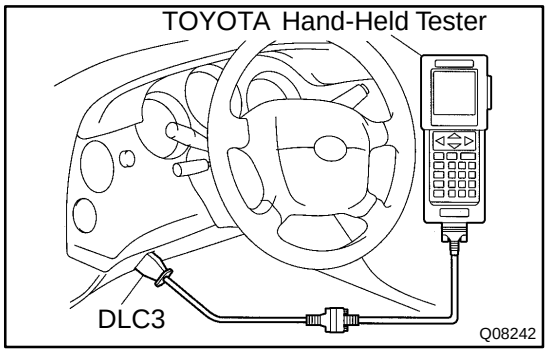

To check the DTC, connect the OBD II scan tool or TOYOTA hand-held tester to Data Link Connector 3 (DLC3) on the vehicle. The OBD II scan tool or TOYOTA hand-held tester also enables you to erase the DTC and check freezed frame data and various forms of engine data. (For operating instructions, see the OBD II scan tool's instruction book.)

DTC include SAE controlled codes and Manufacturer controlled codes.

SAE controlled codes must be set as prescribed by the SAE, while Manufacturer controlled codes can be set freely by the manufacturer within the prescribed limits.

(See DTC chart on page DI-158)

The diagnosis system operates in normal mode during normal vehicle use. It also has a check mode for technicians to simulate malfunction symptoms and troubleshoot. Most DTC use 2 trip detection logic* to prevent erroneous detection and ensure thorough malfunction detection. By switching the ECM to check mode when troubleshooting, the technician can cause the MIL to light up for a malfunction that is only detected once or momentarily. (TOYOTA hand-held tester only)

(See page DI-147)

*2 trip detection logic: When a logic malfunction is first detected, the malfunction is temporarily stored in the ECM memory. If the same malfunction is detected again during the second drive test, this second detection causes the MIL to light up.

The 2 trip repeats the same mode a 2nd time. (However, the IG switch must be turned OFF between the 1st trip and 2nd trip).

Freeze frame data:

Freeze frame data records the engine condition when a misfire (DTC P0300 – P0306) or fuel trim malfunction (DTC P0171, P0172), or other malfunction (first malfunction only), is detected.

Because freeze frame data records the engine conditions (fuel system, calculator load, engine coolant temperature, fuel trim, engine speed, vehicle speed, etc.) when the malfunction is detected, when troubleshooting it is useful for determining whether the vehicle was running or stopped, the engine warmed up or not, the air-fuel ratio lean or rich, etc. at the time of the malfunction.

Priorities for Troubleshooting:

If troubleshooting priorities for multiple DTC are given in the applicable diagnostic chart, these should be followed. If no instructions are given troubleshoot DTC according to the following priorities.

(1) DTC other than fuel trim malfunction (DTC P0171, P0172), EGR (DTC P0401, P0402), and misfire (DTC P0300 - 0306).
(2) Fuel trim malfunction (DTC P0171, P0172) and EGR (DTC P0401, P0402).
(3) Misfire (DTC P0300 - P0306).

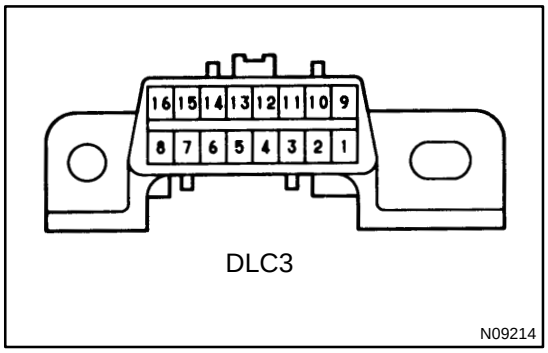

DLC3

(b) Check the DLC3.

The vehicle's ECM uses V.P.W. (Variable Pulse Width) for communication to comply with SAE J1850. The terminal arrangement of DLC3 complies with SAE J1962 and matches the V.P.W. format.

Terminal No.	Connection / Voltage or Resistance	Condition
2	Bus ⊕ Line / Pulse generation	During transmission
4	Chassis Ground / ↔ Body Ground 1 Ω or less	Always
5	Signal Ground / ↔ Body Ground 1 Ω or less	Always
16	Battery Positive / ↔ Body Ground 9 - 14 V	Always

HINT:

If your display shows "UNABLE TO CONNECT TO VEHICLE" when you have connected the cable of the OBD II scan tool or TOYOTA hand-held tester to DLC3, turned the ignition switch ON and operated the scan tool, there is a problem on the vehicle side or tool side.

- If communication is normal when the tool is connected to another vehicle, inspect DLC3 on the original vehicle.
- If communication is still not possible when the tool is connected to another vehicle, the problem is probably in the tool itself, so consult the Service Department listed in the tool's instruction manual.

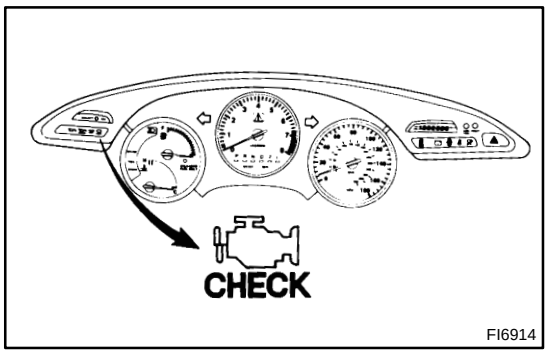

2. INSPECT DIAGNOSIS (Normal mode)

(a) Check the MIL.

(1) The MIL comes on when the ignition switch is turned ON and the engine is not running.

HINT:

If the MIL does not light up, troubleshoot the combination meter (See page BE-2).

(2) When the engine is started, the MIL should go off. If the lamp remains on, the diagnosis system has detected a malfunction or abnormality in the system.

(b) Check the DTC.

NOTICE:

(TOYOTA hand-held tester only): When the diagnosis system is switched from normal mode to check mode, it erases all DTC and freezed frame data recorded in normal mode. So before switching modes, always check the DTC and freezed frame data, and note them down.

(1) Prepare the OBD II scan tool (complying with SAE J1978) or TOYOTA hand-held tester.

(2) Connect the OBD II scan tool or TOYOTA hand-held tester to DLC3 at the lower left of the instrument panel.

(3) Turn the ignition switch ON and turn the OBD II scan tool or TOYOTA hand-held tester switch ON.

(4) Use the OBD II scan tool or TOYOTA hand-held tester to check the DTC and freezed frame data, note them down. (For operating instructions, see the OBD II scan tool's instruction book.)

(5) See page DI-158 to confirm the details of the DTC.

NOTICE:

When simulating symptoms with an OBD II scan tool (excluding TOYOTA hand-held tester) to check the DTC, use normal mode. For codes on the DTC chart subject to "2 trip detection logic", turn the ignition switch OFF after the symptom is simulated the first time. Then repeat the simulation process again. When the problem has been simulated twice, the MIL lights up and the DTC are recorded in the ECM.

3. INSPECT DIAGNOSIS (Check Mode)

TOYOTA hand-held tester only:
Compared to the normal mode, the check mode has an increased sensitivity to detect malfunctions.
Furthermore, the same diagnostic items which are detected in the normal mode can also be detected in the check mode.

(a) Check the DTC.
  (1) Initial conditions.
    - Battery positive voltage 11 V or more.
    - Throttle valve fully closed.
    - Transmission in park or neutral position.
    - Air conditioning switched OFF.
  (2) Turn ignition switch OFF.
  (3) Prepare the TOYOTA hand-held tester.
  (4) Connect the TOYOTA hand-held tester to DLC3 at the lower left of the instrument panel.
  (5) Turn the ignition switch ON and switch the TOYOTA hand-held tester ON.
  (6) Switch the TOYOTA hand-held tester normal mode to check mode. (Check that the MIL flashes.)
  (7) Start the engine. (The MIL goes out after the engine start.)
  (8) Simulate the conditions of the malfunction described by the customer.

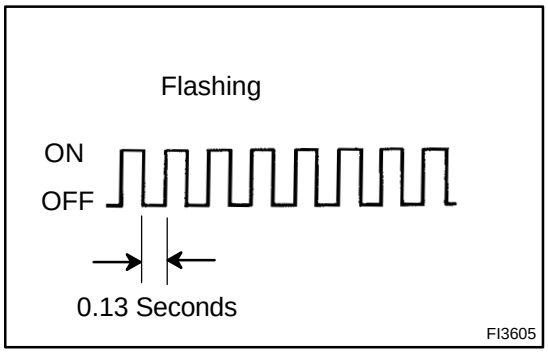

NOTICE:
Leave the ignition switch ON until you have checked the DTC, etc.

  (9) After simulating the malfunction conditions, use the TOYOTA hand-held tester diagnosis selector to check the DTC and freezed frame data, etc.

HINT:
Take care not to turn the ignition switch OFF. Turning the ignition switch OFF switches the diagnosis system from check mode to normal mode, so all DTC, etc. are erased.

  (10) After checking the DTC, inspect the applicable circuit.

(b) Clear the DTC.
The following actions will erase the DTC and freezed frame data.
  (1) Operating the OBD II scan tool (complying with SAE J1978) or TOYOTA hand-held tester to erase the codes. (See the OBD II scan tool's instruction book for operating instructions.)
  (2) Disconnecting the battery terminals or EFI fuse.

NOTICE:
If the TOYOTA hand-held tester switches the ECM from normal mode to check mode or vice-versa, or if the ignition switch is turned from ON to ACC or OFF during check mode, the DTC and freezed frame data will be erased.

4. FAIL-SAFE CHART

If any of the following codes is recorded, the ECM enters fail-safe mode.

DTC No.	Fail-Safe Operation	Fail-safe Deactivation Conditions
P0100	Fuel cut	Returned to normal condition
P0110	Intake air temp. is fixed at 20˚C (68˚F)	Returned to normal condition
P0115	Engine coolant temp. is fixed at 80˚C (176˚F)	Returned to normal condition
P0120	VTA is fixed at 0˚	The following condition must be repeated at least 2 times consecutively When closed throttle position switch is ON: 0.25 V ≦ VTA1 ≦ 0.95 V
P0135 P0141	The heater circuit in which an abnormality is detected is turned off	Ignition switch OFF
P0325 P0330	Max. timing retardation	Ignition switch OFF
P0500	High RPM fuel cut is prohibited IAC control prohibited	Returned to normal condition
P1100	HAC is fixed at 760 mm Hg	Returned to normal condition
P1300	Fuel cut	Returned to normal condition
P1400	Sub throttle valve is fixed at almost fully-open position	The following condition must be repeated at least 2 times consecutively. When closed subthrottle position switch is ON: 0.25 V ≦ VTA2 ≦ 0.95 V
P1405	Waste gate valve is fixed at open position	Returned to normal condition
P1512	Fuel cut	Pressure intake manifold ≦ 1400 mm Hg·abs
P1605	Max. timing retardation	Returned to normal condition
P1630	Does not into the manual pattern	Returned to normal condition

5. CHECK FOR INTERMITTENT PROBLEMS

TOYOTA hand-held tester only:

By putting the vehicle's ECM in check mode, 1 trip detection logic is possible instead of 2 trip detection logic and sensitivity to detect open circuits is increased. This makes it easier to detect intermittent problems.

(1) Clear DTC (See page DI-147)
(2) Set check mode (See page DI-147)
(3) Perform a simulation test (See page IN-18)
(4) Connector connection and terminal inspection (See page IN-28)
(5) Visual check and contact pressure check (See page IN-28)
(6) Connector handling (See page IN-28)

6. BASIC INSPECTION

When the malfunction code is not confirmed in the DTC check, troubleshooting should be performed in the order for all possible circuits to be considered as the causes of the problems.
In many causes, by carrying out the basic engine check shown in the following flow chart, the location causing the problem can be found quickly and efficiently. Therefore, use of this check is essential in engine troubleshooting.

1	**Is battery positive voltage 11 V or more when engine is stopped?**

NO → **Charge or replace battery.**

YES

2	**Is engine cranked?**

NO → **Proceed to page ST-14 , ST-16 and continue to troubleshoot.**

YES

3	**Does engine start?**

NO → **Go to step 7.**

YES

4	Check are filter.

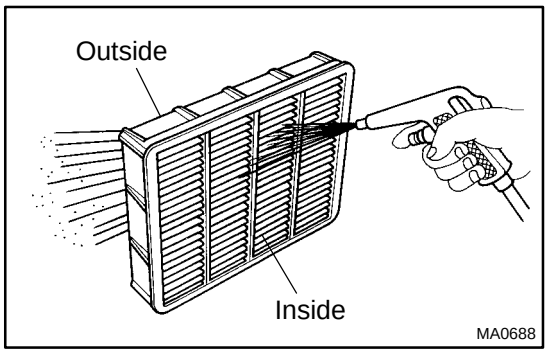

PREPARATION:
Remove air filter.
CHECK:
Visually check that the air cleaner element is not dirty or excessively oily.
HINT:
If necessary, clean element with compressed air. First blow from inside throughly, then blow from outside of element.

NG → **Repair or replace.**

OK

5	Check idle speed.

PREPARATION:
(a) Warm up engine to normal operating temperature.
(b) Switch off all accessories.
(c) Switch off air conditioning.
(d) Shift transmission into ”N” position.
(e) Connect the OBD II scan tool or TOYOTA hand-held tester to DLC3 on the vehicle.
CHECK:
Use CURRENT DATA to check the engine idle speed.
OK:
Idle speed: 650 ± 50 rpm

NG → **Proceed to matrix chart of problem symptoms on page DI-169 .**

OK

6	Check ignition timing.

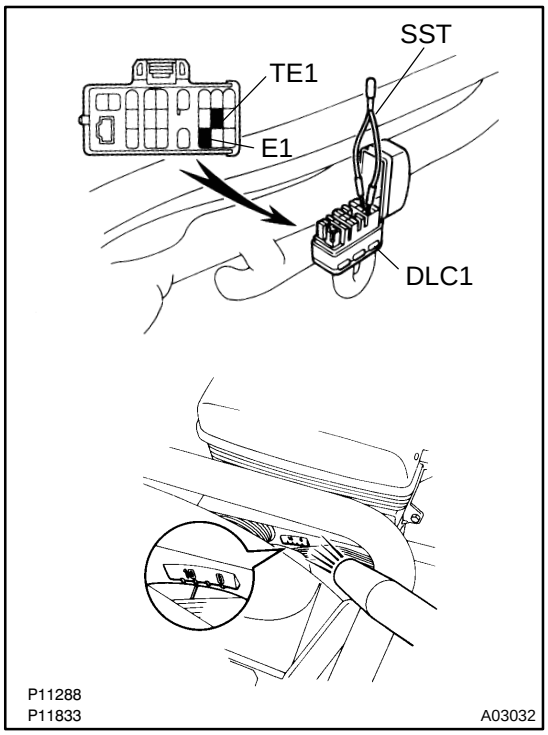

PREPARATION:

(a) Warm up engine to normal operating temperature.
(b) Shift transmission into ”N” position.
(c) Keep the engine speed at idle.
(d) Using SST, connect terminals TE1 and E1 of DLC 1.
SST 09843-18020
(e) Using a timing light, connect the tester to check wire (See page EM-1 1).

CHECK:

Check ignition timing.

OK:

Ignition timing: 10 ± 2° BTDC at idle

NG → **Proceed to IG-1 and continue to troubleshoot.**

OK

Proceed to matrix chart of problem symptoms on page DI-169 .

7	Check fuel pressure.

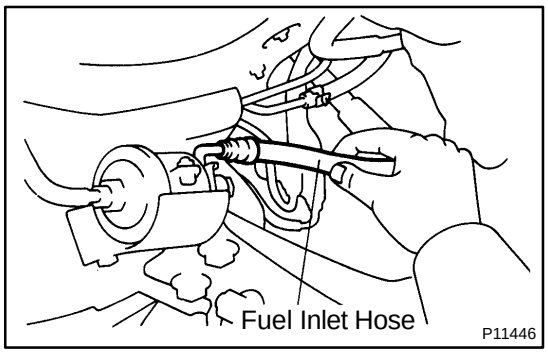

PREPARATION:

(a) Be sure that enough fuel is in the tank.
(b) Turn ignition switch ON.
(c) Connect the TOYOTA hand-held tester to DLC3 on the vehicle.
(d) Use ACTIVE TEST mode to operate the fuel pump.
(e) If you have no TOYOTA hand-held tester, connect the positive (+) and negative (-) leads from the battery to the fuel pump connector (See page SF-5).

CHECK:

Check for fuel pressure in the fuel inlet hose when it is pinched off.

HINT:

At this time, you will hear the sound of flowing.

NG → **Proceed to page SF-5 and continue totroubleshoot.**

OK

8	Check for spark.

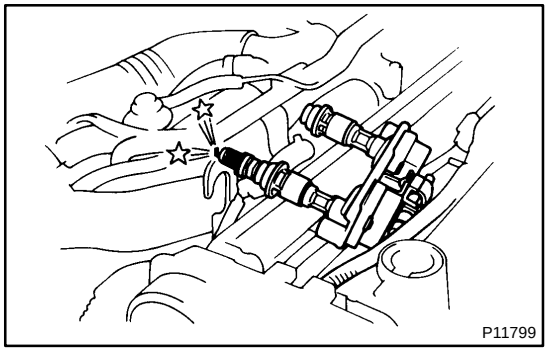

PREPARATION:

(a) Remove ignition coil (See page IG-6).
(b) Remove spark plug.
(c) Install the spark plug to the ignition coil, and connect the ignition coil connector.
(d) Ground the spark plug.

CHECK:

Check if spark occurs while the engine is being cranked.

NOTICE:

To prevent excess fuel being injected from the injectors during this test, don't crank the engine for more than 5 ~ 10 sec. at a time.

NG → **Proceed to page IG-1 and continue to troubleshoot.**

OK

Proceed to matrix chart of problem systems on page DI-169 .

7. ENGINE OPERATING CONDITION

NOTICE:

The values given below for "Normal Condition" are representative values, so a vehicle may still be normal even if its value varies from those listed here. So do not decide whether a part is faulty or not solely according to the "Normal Condition" here.

(a) CARB Mandated Signals

TOYOTA hand-held tester display	Measurement Item	Normal Condition*
FUEL SYS #1	Fuel System Bank 1 OPEN: Air-fuel ratio feedback stopped CLOSED: Air-fuel ratio feedback operating	Idling after warmed up: CLOSED
CALC LOAD	Calculator Load: Current intake air volume as a proportion of max. intake air volume	Idling: 6.7 - 11.0 % Racing without load (2,500 rpm): 7.0 - 11.3 %
COOLANT TEMP	Engine Coolant Temperature Sensor Value	After warmed up: 80 - 95°C (176 - 203°F)
SHORT FT #1	Short - term Fuel Trim Bank 1	0 ± 20 %
LONG FT #1	Long - term Fuel Trim Bank 1	0 ± 20 %
ENGINE SPD	Engine Speed	Idling: 650 ± 50 rpm
VEHICLE SPD	Vehicle Speed	Vehicle stopped: 0 km/h (0 mph)
IGN ADVANCE	Ignition Advance Ignition Timing of Cylinder No.1	Idling: BTDC 10 ~ 20°
INTAKE AIR	Intake Air Temperature Sensor Valve	Equivalent to Ambient Temp.
MAF	Air Flow Rate Through Mass Air Flow Meter	Idling: 2.9 - 4.8 gm/sec Racing without load (2,500 rpm): 11.7 - 18.8 gm/sec
THROTTLE POS	Voltage Output of Throttle Position Sensor Calculated as a Percentage 0 V → 0 %, 5 V → 100 %	Throttle Fully Closed: 7 - 11 % Fully Open: 65 - 75 %
O2S B1, S1	Voltage Output of Oxygen Sensor Bank1, Sensor 1	Idling: 0.1 - 0.9 V
O2FT B1, S1	Oxygen Sensor Fuel Trim Bank1, Sensor 1 (Same as SHORT FT #1)	0 ± 20 %
02S, B1, S2	Voltage Output of Oxygen Sensor Bank 1, Sensor 2	Driving 50 km/h (31 mph): 0.1 - 0.9 V

*: If no conditions are specifically stated for "idling", it means the shift lever is at N or P position, the A/C switch is OFF and all accessory switches are OFF.

(b) TOYOTA Enhanced Signals

TOYOTA hand-held tester display	Measurement Item	Normal Condition*
MISFIRE RPM	Engine RPM for first misfire range	Misfire 0: 0 rpm
MISFIRE LOAD	Engine load for first misfire range	Misfire 0: 0 g/r
INJECTOR	Fuel injection time for cylinder No.1	Idling: 1.3 ~ 2.7 ms
IAC STEP POS	Intake Air Control Valve Step Position Opening position step motor type IAC valve	Idling: 10 ~ 50 step
STARTER SIG	Starter Signal	Cranking: ON
CTP SW	Closed Throttle Position Switch Signal	Throttle fully closed: ON
A/C SIG	A/C Switch Signal	A/C ON: ON
PNP SW	Park / Neutral Position Switch Signal	P or N position: ON
ELECTRICAL LOAD SIG	Electrical Load Signal	Defogger S/W ON: ON
STOP LIGHT SW	Stop Light Switch Signal	Stop light switch ON: ON
FC IDL	Fuel Cut Idle: Fuel cut when throttle valve fully closed, during deceleration	Fuel cut operating: ON
FC TAU	Fuel Cut TAU: Fuel cut after between 20 sec. at light load	Fuel cut operating: ON
CYL #1 CYL #2 CYL #3 CYL #4 CYL #5 CYL #6	Abnormal revolution variation for each cylinder	0%
IGNITION	Total number of ignitions for every 1,000 revolutions	0 ~ 3,0000
EGRT GAS	EGR Gas Temperature Sensor Value	EGR not operating: Temperature between intake air temp. and engine coolant temp.
FUEL PRES UP VSV	Fuel Pressure Up VSV Signal	High temp. restarting: ON
EGR SYSTEM	EGR system operating condition	Idling: OFF
FUEL PUMP	Fuel Pump Signal	Idling: ON
A/C MAG CLUTCH	A/C Magnetic Clutch Signal	A/C ON: ON
EVAP (PURGE) VSV	EVAP VSV Signal	VSV operating: ON
TURBO BOOST VSV	Waste gate valve VSV signal	VSV operating: ON
INTK AIR CTL VSV	Intake Air Control Valve VSV Signal	VSV operating: OFF
EXH GAS CTL VSV	Exhaust Gas Control Valve VSV Signal	VSV operating: OFF
EXH BYPASS VSV	Exhaust Bypass Valve VSV Signal	VSV operating: OFF
TOTAL FT B1	Total Fuel Trim Bank 1: Average value for fuel trim system of bank 1	Idling: 0.8 ~ 1.2
TOTAL FT B2	Total Fuel Trim Bank 2: Average value for fuel trim system of bank 2	Idling: 0.8 ~ 1.2
02 LR B1, S1	Oxygen Sensor Lean Rich Bank 1, Sensor 1 Response time for oxygen sensor output to switch from lean to rich.	Idling after warmed up: 0 ~ 1,000 m sec.
02 RL B1, S1	Oxygen Sensor Rich Lean Bank 1, Sensor 1 Response time for oxygen sensor output to switch from rich to lean.	Idling after warmed up: 0 ~ 1,000 m sec.

*: If no conditions are specifically stated for ”Idling”, it meas the shift lever is at N or P position, the A/C switch is OFF and all accessory switches are OFF.

DI4SI-01

DIAGNOSTIC TROUBLE CODE CHART

HINT:

Parameters listed in the chart may not be exactly the same as your reading due to the type of instrument or other factors.

If a malfunction code is displayed during the DTC check in check mode, check the circuit for that code listed in the table below. For details of each code, turn to the page reffered to under the ”See page” for the respective ”DTC No.” in the DTC chart.

DTC No. (See Page)	Detection Item	Trouble Area	MIL*	Memory
P0100 (DI-170)	Mass Air Flow Circuit Malfunction	Open or short in mass air flow meter circuit Mass air flow meter ECM	○	○
P0101 (DI-174)	Mass Air Flow Circuit Range / Performance Problem	Mass air flow meter	○	○
P0110 (DI-175)	Intake Air Temp. Circuit Malfunction	Open or short in intake air temp. sensor circuit Intake air temp. sensor ECM	○	○
P0115 (DI-179)	Engine Coolant Temp. Circuit Malfunction	Open or short in engine coolant temp. sensor circuit Engine coolant temp. sensor ECM	○	○
P0116 (DI-183)	Engine Coolant Temp. Circuit Range / Performance Problem	Engine coolant temp. sensor Cooling system	○	○
P0120 (DI-184)	Throttle / Pedal Position Sensor / Switch ”A” Circuit Malfunction	Open or short in throttle position sensor circuit Throttle position sensor ECM	○	○
P0121 (DI-189)	Throttle /Pedal Position Sensor / Switch ”A” Circuit Range / Peformance Problem	Throttle position sensor	○	○
P0125 (DI-190)	Insufficient Coolant Temp. for Closed Loop Fuel Control	Open or short in heated oxygen sensor circuit Heated oxygen sensor	○	○
P130 (DI-193)	Heated Oxygen Sendor Circuit Malfunction (Bank 1 Sensor 1)	Heated oxygen sensor Fuel trim malfunction	○	○
P0133 (DI-196)	Heated Oxygen Sensor Circuit Slow Response (Bank 1 Sensor 1)	Heated oxygen sensor	○	○

*: ○... MIL lights up

DTC No. (See Page)	Detection Item	Trouble Area	MIL*	Memory
P0135 (DI-197)	Heated Oxygen Sensor Heater Circuit Malfunction (Bank 1 Sensor 1)	Open or short in heater circuit of heated oxygen sensor Heated oxygen sensor heater ECM	○	○
P0136 (DI-199)	Heated Oxygen Sensor Circuit Malfunction (Bank 1 Sensor 2)	Heated oxygen sensor	○	○
P0141 (DI-197)	Heated Oxygen Sensor Heater Circuit Malfunction (Bank 1 Sensor 2)	Same as DTC No. P0135	○	○
P0171 (DI-201)	System too Lean (Fuel Trim)	Air Intake (hose loose) Fuel line pressure Injector blockage Heated oxygen sensor malfunction Mass air flow meter Engine coolant temp. sensor	○	○
P0172 (DI-201)	System too Rich (Fuel Trim)	Fuel line pressure Injector blockage, leak Heated oxygen sensor malfunction Mass air flow meter Engine coolant temp. sensor	○	○
P0300 (DI-204)	Random / Multiple Cylinder Misfire Detected	Ignition system Injector Fuel line pressure EGR Compression pressure Valve clearance not to specification Valve timing Mass air flow meter Engine coolant temp. sensor	○	○
P0301 P0302 P0303 P0304 P0305 P0306 (DI-204)	Misfire Detected - Cylinder 1 - Cylinder 2 - Cylinder 3 - Cylinder 4 - Cylinder 5 - Cylinder 6			
P0325 (DI-209)	Knock Sensor 1 Circuit Malfunction	Open or short in knock sensor 1 circuit Knock sensor 1 (looseness) ECM	○	○
P0330 (DI-209)	Knock Sensor 2 Circuit Malfunction	Open or short in knock sensor 2 circuit Knock sensor 2 (looseness) ECM	○	○
P0335 (DI-212)	Crankshaft Position Sensor "A" Circuit Malfunction	Open or short in crankshaft position sensor circuit for NE signal Crankshaft position sensor for NE signal Starter ECM	○	○

*: ○... MIL lights up

DTC No. (See Page)	Detection Item	Trouble Area	MIL*	Memory
P0340 (DI-215)	Camshaft Position Sensor Circuit Malfunction	Open or short in camshaft position sensor circuit Camshaft position sensor Open or short in crankshaft position sensor circuit for NE2 signal Crankshaft position sensor for NE2 signal Starter ECM	○	○
P0401 (DI-217)	Exhaust Gas Recirculation Flow Insufficient Detected	EGR valve stuck closed Short in VSV circuit for EGR Open in EGR gas temp. sensor circuit EGR hose disconnected ECM	○	○
P0402 (DI-227)	Exhaust Gas Recirculation Flow Excessive Detected	EGR valve stuck open EGR VSV open malfunction Open in VSV circuit for EGR Short in EGR gas temp. sensor circuit ECM	○	○
P0420 (DI-231)	Catalyst System Efficiency Below Threshold	Three-way catalytic converter Open or short in heated oxygen sensor circuit Heated oxygen sensor	○	○
P0441 (DI-234)	Evaporative Emission Control System Incorrect Purge Flow	Open or short in VSV circuit for EVAP VSV for EVAP ECM Vacuum hose blocked or disconnected Charcoal canister	○	○
P0500 (DI-238)	Vehicle Speed Sensor Malfunction	Open or short in vehicle speed sensor circuit Vehicle speed sensor Combination meter ECM	○	○
P0505 (DI-240)	Idle Control System Malfunction	IAC valve is stuck or closed Open or short in IAC valve circuit Open or short in A/C signal circuit Air intake (hose loose)	○	○
P0510 (DI-243)	Closed Throttle Position Switch Malfunction	Open in closed throttle position switch circuit Closed throttle position switch ECM	○	○

*: ○ ... MIL lights up

DTC CHART (Manufacture Controlled)

DTC No. (See Page)	Detection Item	Trouble Area	MIL*	Memory
P1100 (DI-247)	Barometric Pressure Sensor Circuit MAlfunction	ECM	○	○
P1200 (DI-248)	Fuel Pump Relay / ECU Circuit Malfunction	Open or short in fuel pump ECU circuit Fuel pump ECU ECM power source circuit Fuel pump ECM	-	○
P1300 (DI-252)	Igniter Circuit Malfunction	Open or short in IGF or IGT circuit from igniter to ECM Igniter ECM	○	○
P1335 (DI-257)	Crankshaft Position Sensor Circuit Malfunction (during engine running)	Open or short in crankshaft position sensor circuit for NE signal Crankshaft position sensor for NE signal Starter ECM	-	○
P1400 (DI-258)	Sub Throttle Position Sensor Malfunction	Open or short in sub throttle position sensor circuit Sub throttle position sensor ECM	○	○
P1401 (DI-261)	Sub Throttle Position Sensor Range / Performance Problem	Sub throttle position sensor	○	○
P1405 (DI-262)	Turbo Pressure Sensor Circuit Malfunction	Open or short in turbo pressure sensor circuit Turbo pressure sensor ECM	○	○
P1406 (DI-265)	Turbo Pressure Sensor Circuit Range / Performance Problem	Turbo pressure sensor	○	○
P1511 (DI-266)	Boost Pressure Low Malfunction	Air intake (leakage or clogging) Actuator (for waste gate valve, IACV control valve, exhaust bypass valve and exhaust gas control valve) Short in VSV for waste gate valve, IACV control valve, exhaust bypass valve and exhaust gas control valve circuit ECM	○	○
P1512 (DI-274)	Boost Pressure High Malfunction	Actuator (for waste gate valve and exhaust bypass valve) Short in VSV for waste gate valve and exhaust bypass valve circuit ECM	○	○
P1520 (DI-279)	Stop Light Switch Signal Malfunction	Short in stop light switch signal circuit Stop light switch ECM	○	○
P1600 (DI-282)	ECM BATT Malfunction	Open in back up power source circuit ECM	○	○

*: — .... MIL dose not light up
○ ... MIL lights up

DTC No. (See Page)	Detection Item	Trouble Area	MIL*	Memory
P1605 (DI-284)	Knock Control CPU Malfunction	ECM	○	○
P1630 (DI-285)	Traction Control System Malfunction	Open or short in ETC+ or ETC- circuit Open or short in EFI+ or EFI- circuit Throttle control ECU ECM	-	○
P1652 (DI-287)	IACV Control CIrcuit Malfunction	Open or short in VSV circuit for IACV VSV for IACV ECM	○	○
P1658 (DI-291)	Waste Gate Valve Control CIrcuit Malfunction	Open or short in VSV circuit for waste gate valve VSV for waste gate valve ECM	○	○
P1661 (DI-294)	Exhaust Gate Valve Control CIr-cuit Malfunction	Open or short in VSV circuit for exhaust gate control valve VSV for exhaust gate control valve ECM	○	○
P1662 (DI-297)	Exhaust Bypass Valve Control CIrcuit Malfunction	Open or short in VSV circuit for exhaust bypass valve VSV for exhaust bypass valve ECM	○	○
P1780 (DI-300)	Park / Neutral Position Switch Malfunction	Short in park / neutral position switch circuit Park / neutral position switch ECM	○	○

*: — .... MIL dose not light up
○ ... MIL lights up

DI4SJ-01

PARTS LOCATION

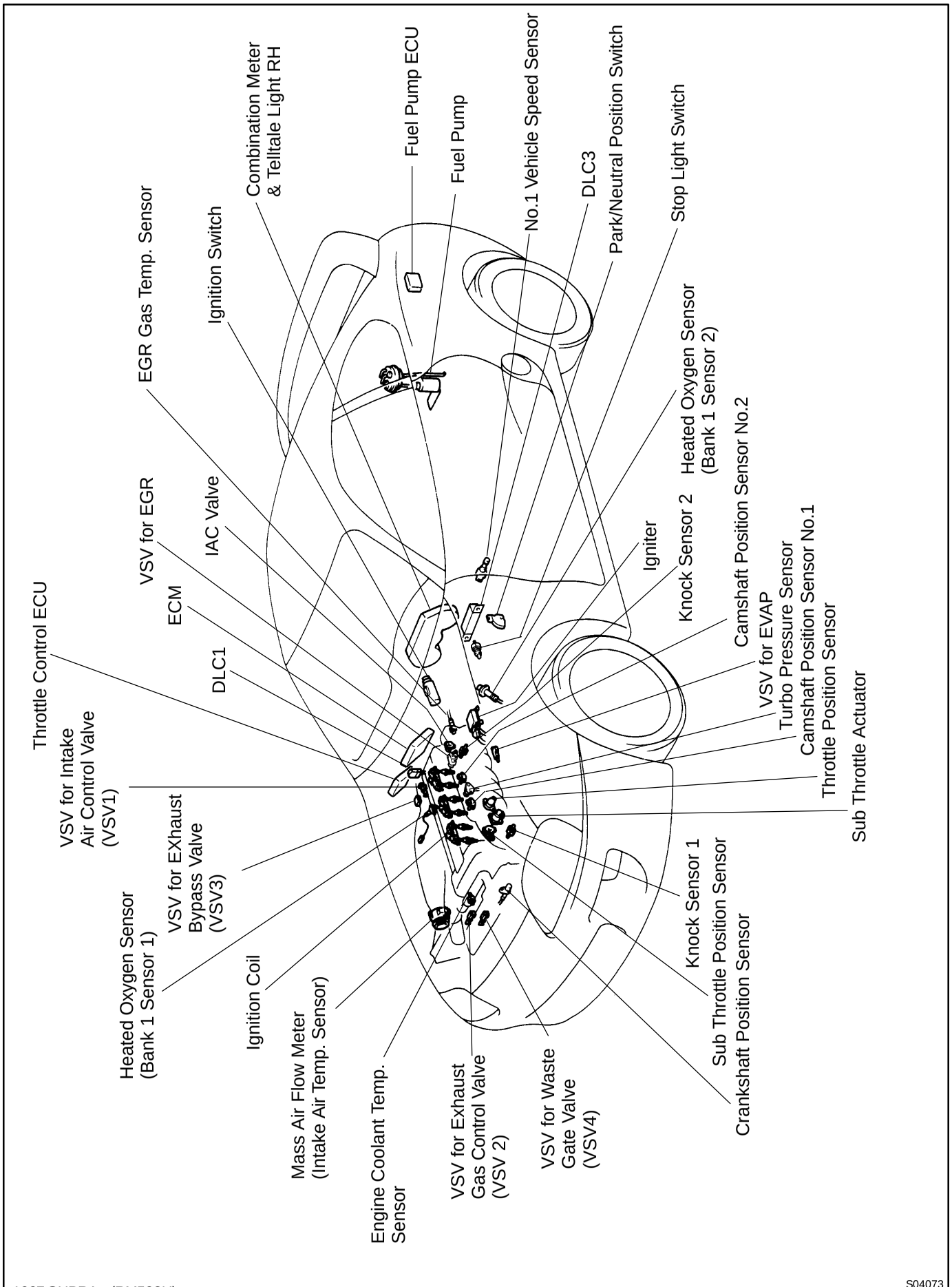

DI4SK-01

TERMINALS OF ECM

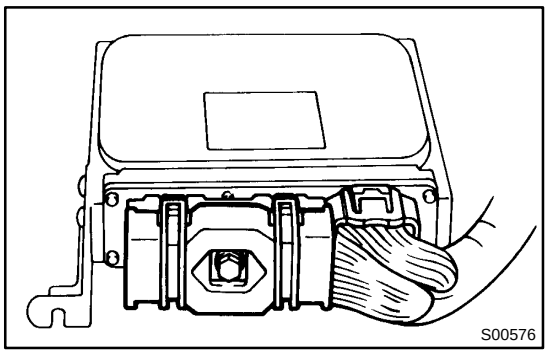

Connectors of the ECM are water-proof and are the bolt type. For water proof type connectors, in order to measure the voltage of ECM terminals and the resistance of connected parts, connect the inspection check harness between the ECM and vehicle wire harness, then perform the inspection.
The inspection method of inserting a tester probe from the other side of connector noticeably reduces the water-proof ability.
Disconnect the connector by fully loosening the bolt.

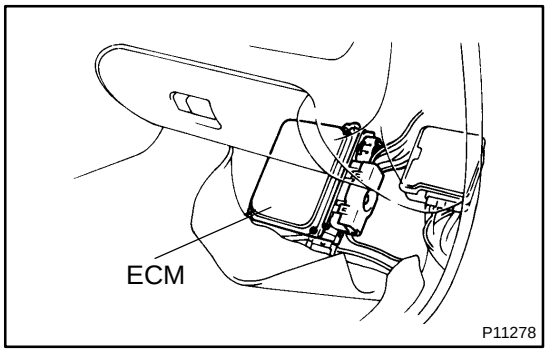

PREPARATION

(a) Turn the ignition switch to LOCK position.
(b) Turn up the passenger side floor mat.
(c) Remove the ECM protector.
(d) Disconnect the connectors from the ECM.
After completely loosening the bolt, the 2 parts of connector can be separated.

NOTICE:

- **Do not pully the wire harness when disconnecting the connector.**
- **When disconnecting the connector, the ECM's back-up power source is cut off, so the DTC, etc. recorded in the ECM memory are cancelled.**
- **Never insert a tester probe or male terminal used for inspection purposes into the female terminal of the vehicle wire harness. Otherwise, the female terminal may be widened, which can result in faulty connection.**

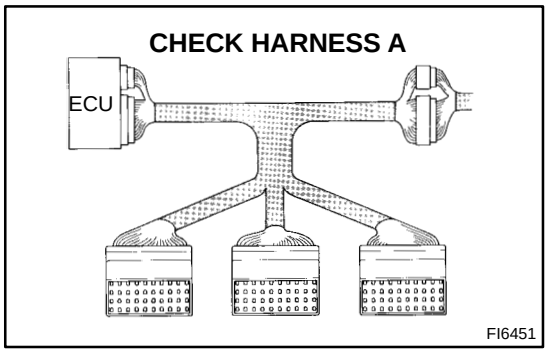

(e) Connect the Check Harness A between ECM and connector of vehicle wire harness.
SST 09990-01000

HINT:
The arrangement of the DLC1 terminals are the same as those of the ECM (See page DI-164).

(f) Disconnect the Check Harness A.
(g) Reconnect the connectors to the ECM.
(1) Match the male connector correctly with female connector, then press them together.
(2) Tighten the bolt.
Make sure the connector is completely connected, by tightening the bolt until there is a clearance of less than 1 mm (0.04 in.) between bottom of the male connector and end of the female connector.

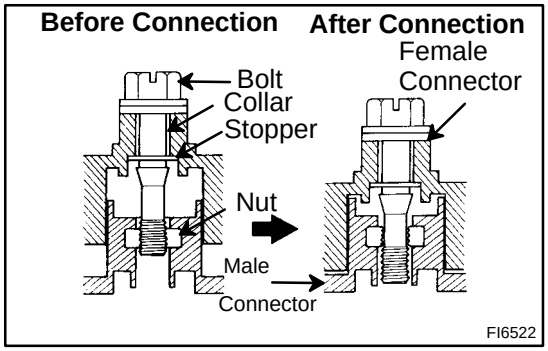

(h) Install the ECM protector and floor mat.

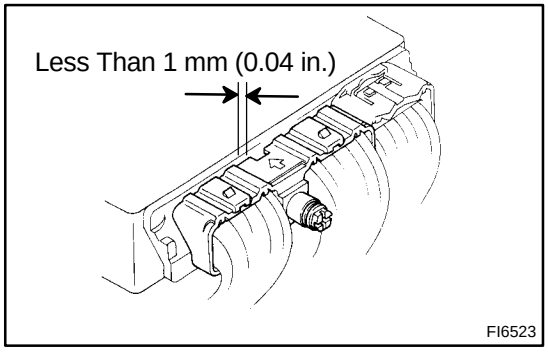

ECM Terminals

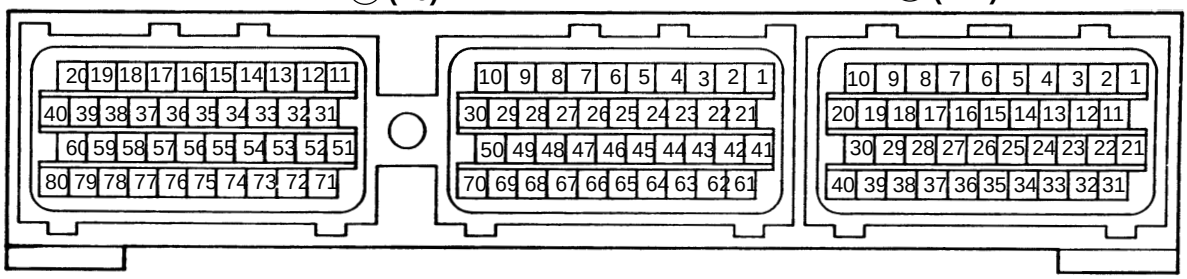

Symbols (Terminals No.)	Wiring Color	Condition	STD Voltage (V)
BATT (A33) - E1 (B69)	B-W ↔ BR	Always	9 - 14
IGSW (A1) - E1 (B69)	B-W ↔ BR	IG switch ON	9 - 14
+B (A31) - E1 (B69)	B-R ↔ BR	IG switch ON	9 - -14
VCC (B41) - E2 (B65)	L-R ↔ W-B	IG switch ON	4.5 - 5.5
IDL1 (B64) - E2 (B65)	R ↔ W-B	IG switch ON and apply vacuum to the throttle opener Main throttle valve fully closed	-0.1 - 3.0
		IG switch ON • Main throttle valve fully opened	9 - 14
IDL2 (B63) - E2 (B65)	GR-R ↔ W-B	IG switch ON Sub-throttle valve fully closed	-0.1 - 3.0
		IG switch ON • Sub-throttle valve fully open	9 - 14
VTA1 (B43) - E2 (B65)	Y ↔ W-B	IG switch ON • Main or sub-throttle valve fully closed	0.3 - 0.8
		IG switch ON • Main or sub-throttle valve fully open	3.2 - 4.9
VTA2 (B42) - E2 (B65)	Y-L ↔ W-B	IG switch ON • Main or sub-throttle valve fully closed	0.3 - 0.8
		IG switch ON • Main or sub-throttle valve fully open	3.2 - 4.9
VG (B66) - E2G (B28)	Y-R ↔ BR	Idling	0.7 - 1.7
THA (B45) - E2 (B65)	P-L ↔ W-B	Idling, Intake air temp. 0°C (32°F) to 80°C (176°F)	0.5 - 3.4
THW (B44) - E2 (B65)	L-Y ↔ W-B	Idling, Engine Coolant temp. 60°C (140°F) to 120°C (248°F)	0.2 - 1.0
THG (B46) - E2 (B65)	BR-Y ↔ W-B	Idling after warning up	1 - 4
STA (B77) - E1 (B69)	B ↔ BR	Cranking	6.0 or more
#10 (B20) - E01 (B80)	R-L ↔ BR	IG switch ON	9 - 14
		Idling	Pulse generation (See page DI-204)
#20 (B19) - E01 (B80)	R-Y ↔ BR	IG switch ON	9 - 14
		Idling	Pulse generation (See page DI-204)
#30 (B18) - E01 (B80)	R-G ↔ BR	IG switch ON	9 - 14
		Idling	Pulse generation (See page DI-204)
#40 (B17) - E01 (B80)	R-W ↔ BR	IG switch ON	9 - 14
		Idling	Pulse generation (See page DI-204)

#50 (B16) - E01 (B80)	R ↔ BR	IG switch ON	9 - 14
		Idling	Pulse generation (See page DI-204)
#60 (B15) - E01 (B80)	R-B ↔ BR	IG switch ON	9 - 14
		Idling	Pulse generation (See page DI-204)
IGT1 (B57) - E1 (B69)	R-W ↔ BR	IG switch ON	- 0.1 - 0.5
		Idling	Pulse generation (See page DI-252)
IGT2 (B56) - E1 (B69)	W-R ↔ BR	IG switch ON	- 0.1 - 0.5
		Idling	Pulse generation (See page DI-252)
IGT3 (B55) - E1 (B69)	LG ↔ BR	IG switch ON	- 0.1 - 0.5
		Idling	Pulse generation (See page DI-252)
IGT4 (B54) - E1 (B69)	B-R ↔ BR	IG switch ON	- 0.1 - 0.5
		Idling	Pulse generation (See page DI-252)
IGT5 (B53) - E1 (B69)	L ↔ BR	IG switch ON	- 0.1 - 0.5
		Idling	Pulse generation (See page DI-252)
IGT6 (B52) - E1 (B69)	R ↔ BR	IG switch ON	- 0.1 - 0.5
		Idling	Pulse generation (See page DI-252)
IGF (B58) - E1 (B69)	R-Y ↔ BR	IG switch ON	4.5 - 5.5
		Idling	Pulse generation (See page DI-252)
G1 (B26) - G1≧ (B6)	W ↔ O	Idling	Pulse generation (See page DI-215)
G2 (B25) - NE≧ (B7)	B-W ↔ BR	Idling	Pulse generation (See page DI-215)
NE (B27) - NE≧ (B7)	B-R ↔ BR	Idling	Pulse generation (See page DI-215)
M-REL (A24) - E1 (B69)	GR ↔ BR	IG switch ON	9 - 14
FPC (A22) - E1 (B69)	V-W ↔ BR	IG switch ON	Below 0.5
		Idling	Pulse generation (4.0 - 5.5)
DI (A21) - E1 (B69)	G ↔ BR	Idling	7.0 or more
EVAP (B74) - E01 (B80)	V ↔ BR	IG switch ON	9 - 14
EGR (B75) - E01 (B80)	P ↔ BR	D posiiton stall rpm: 1,600 ~ 1,800 rpm	Pulse generation or Below 2.0
		Idling	9 - 14
ISC1 (B35) - E01 (B80)	V-Y ↔ BR	Idling, When A/C Switch ON or OFF	Pulse generation (See page DI-240)
ISC2 (B34) - E01 (B80)	G-W ↔ BR	Idling, When A/C Switch ON or OFF	Pulse generation (See page DI-240)
ISC3 (B33) - E01 (B80)	G-O ↔ BR	Idling, When A/C Switch ON or OFF	Pulse generation (See page DI-240)

ISC4 (B32) - E01 (B80)	R-G ↔ BR	Idling, When A/C Switch ON or OFF	Pulse generation (See page DI-240)
OX1 (B48) - E1 (B69)	W ↔ BR	Maintain engine speed at 2,500 rpm for 2 min. after warning up	Pulse generation (See page DI-193)
OXS (B47) - E1 (B69)	R-L ↔ BR	Maintain engine speed at 2,500 rpm for 2 min. after warning up	Pulse generation (See page DI-193)
HT1 (B71) - E01 (B80)	B-L ↔ BR	Idling after warning up	Below 3.0
		IG switch ON	9 - 14
HTS (B72) - E01 (B80)	BR-W ↔ BR	Idling after warning up	Below 3.0
		IG switch ON	9 - 14
KNK1 (B50) - E1 (B69)	W ↔ BR	Idling	Pulse generation (See page DI-212)
KNK2 (B49) - E1 (B69)	W ↔ BR	Idling	Pulse generation (See page DI-212)
NSW (B76) - E1 (B69)	B-W ↔ BR	IG switch ON Other shift position in "P" or "N" position	9 - 14
		IG switch ON Shift position in "P" or "N" position	0 - 3.0
SPD (A2) - E1 (B69)	P ↔ BR	IG switch ON Rotate driving wheel slowly	Pulse generation (See page DI-238)
TE1 (A20) - E1 (B69)	L ↔ BR	IG switch ON	9 - 14
W (A6) - E1 (B69)	L-B ↔ BR	Idling	9 - 14
		IG switch ON	0 – 3.0
OD1 (A12) - E1 (B69)	BR-B ↔ BR	IG switch ON	9 - 14
AC1 (A34) - E1 (B69)	L-R ↔ BR	A/C switch ON (At idling)	0 - 1.5
		A/C switch OFF	7.5 - 14
ACMG (A23) - E01 (B80)	W-G ↔ BR	A/C switch ON (At idling)	0 – 3.0
		A/C switch OFF	9 - 14
FPU (B73) - E01 (B80)	W-L ↔ BR	IG switch ON	9 - 14
		Restarting at high engine coolant temp.	Below 2.0
ELS (A15) - E1 (B69)	R-Y ↔ BR	Defogger switch or taillight switch ON	7.5 - 14
		Defogger switch and taillight switch OFF	-0.1 - 1.5
SDL (A8) - E1 (B69)	G ↔ BR	During transmission	Pulse generation
VSV1 (B40) - E1 (B69)	G-B ↔ BR	Immediately after racing	Below 3.0
		Idling	9 - 14
VSV2 (B39) - E1 (B69)	G-Y ↔ BR	For 2 sec. after IG switch ON to OFF	Below 3.0
		Idling	9 - 14
VSV3 (B38) - E1 (B69)	B-Y ↔ BR	Idling	9 - 14
VSV4 (B60) - E1 (B69)	L-W ↔ BR	Idling and other shift position "P" or "N" position (for A/T). Idling (for M/T)	Below 3.0
		Idling and shift position "P" or "N" position (for A/T)	9 - 14
PIM1 (B62) - E2 (B65)	B-Y ↔ W-B	IG switch ON	2.3 - 3.0
		IG switch ON and apply vacuum 26.7 kPa (200 mm Hg, 7.9 in. Hg)	1.0 - 1.5
EFI+ (A27) - E2 (B65)	B ↔ W-B	IG switch ON	Pulse generation (See page DI-285)
EFI- (A26) - E2 (B65)	W ↔ W-B	IG switch ON	Pulse generation (See page DI-285)

ETC+ (A14) - E2 (B65)	Y ↔ W-B	IG switch ON	Pulse generation (See page DI-285)
ETC- (A13) - E2 (B65)	BR ↔ W-B	IG switch ON	Pulse generation (See page DI-285)

DI4SL-01

PROBLEM SYMPTOMS TABLE

When the malfunction code is not confirmed in the DTC check and the problem still can not be confirmed in the basic inspection, then proceed to this step and perform troubleshooting according to the numbered order given in the table below.

Symptom	Suspect Area	See page
Does not start (Engine does not crank)	1. Starter and Starter relay	ST-14 , ST-16
Does not start (No initial combustion)	1. ECM power source circuit 2. Fuel pump control circuit 3. Engine control module (ECM)	DI-304 DI-248 IN-18
Does not start (No complete combustion)	1. Fuel pump control circuit	DI-248
Difficult to start (Engine cranks normally)	1. Starter signal circuit 2. Fuel pump control circuit 3. Compression	DI-301 DI-248 EM-3
Difficult to start (Cold engine)	1. Starter signal circuit 2.Fuel pump control circuit	DI-301 DI-248
Difficult to start (Hot engine)	1. Starter signal circuit 2. Fuel pressure control circuit 3. Fuel pump control circuit	DI-301 DI-309 DI-248
Poor idling (High engine idle speed)	1. A/C signal circuit 2. ECM power source circuit	DI-722 DI-304
Poor idling (Low engine idle speed)	1. A/C signal circuit 2. Fuel pump control circuit	DI-722 DI-248
Poor idling (Rough idling)	1. Compression 2. Fuel pump control circuit	EM-3 DI-248
Poor idling (Hunting)	1. ECM power source circuit 2. Fuel pump control circuit	DI-304 DI-248
Poor Driveability (Hesitation/Poor acceleration)	1. Fuel pump control circuit 2. A/T faulty	DI-248 DI-391
Poor Driveability (Surging)	1. Fuel pump control circuit	DI-248
Engine stall (Soon after starting)	1. Fuel pump control circuit	DI-248
Engine stall (During A/C operation)	1. A/C signal circuit 2. Engine control module (ECM)	DI-722 IN-18

DI4SM-01

CIRCUIT INSPECTION

DTC	P0100	Mass Air Flow Circuit Malfunction

CIRCUIT DESCRIPTION

The mass air flow meter uses a platinum hot wire. The hot wire air flow meter consists of a platinum hot wire, thermistor and a control circuit installed in a plastic housing. The hot wire air flow meter works on the principle that the hot wire and thermistor located in the intake air bypass of the housing detect any changes in the intake air temperature.

The hot wire is maintained at the set temperature by controlling the current flow through the hot wire. This current flow is then measured as the output voltage of the air flow meter.

The circuit is constructed so that the platinum hot wire and thermistor provide a bridge circuit, with the power transistor controlled so that the potential of ”A” and ”B” remains equal to maintain the set temperature.

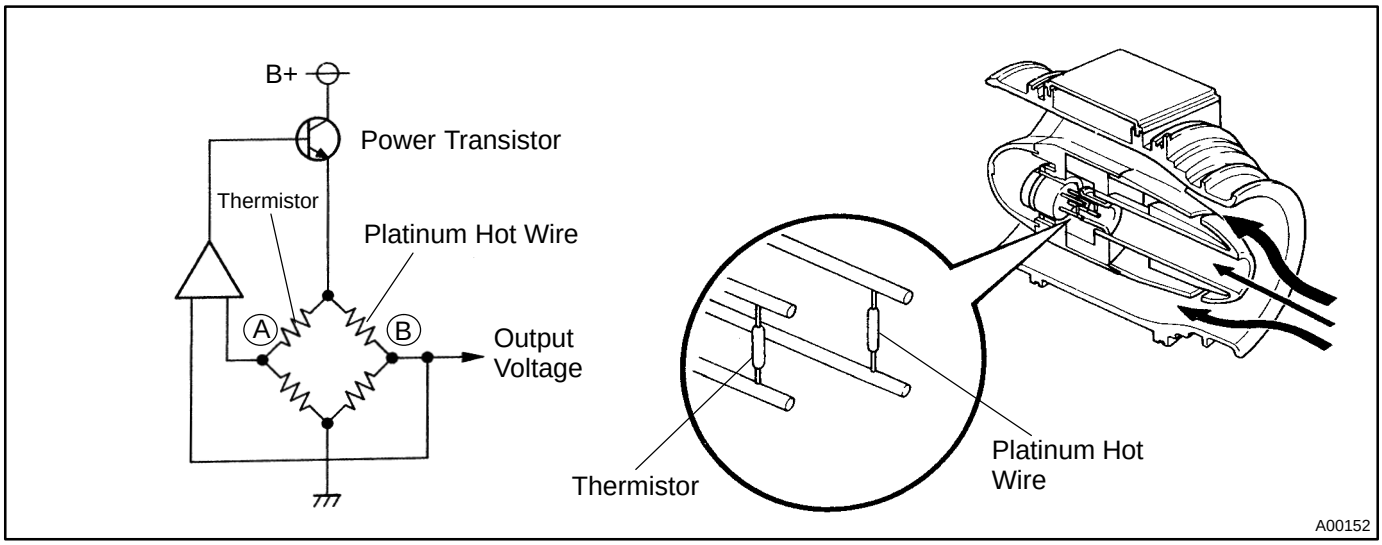

DTC No.	DTC Detecting Condition	Trouble Area
P0100	Open or short in mass air flow meter circuit with engine speed 4,000 rpm or less	• Open or short in mass air flow meter circuit • Mass air flow meter • ECM
	Open or short in mass air flow meter circuit with engine speed 4,000 rpm or more (2 trip detection logic)	

If the ECM detects DTC ”P0100” it operates the fail safe function, keeping the ignition timing and injection volume constant and making it possible to drive the vehicle.

HINT:

After confirming DTC P0100 use the OBD II scan tool or TOYOTA hand-held tester to confirm the mass air flow ration from ”CURRENT DATA”.

Mass Air Flow Value (gm / sec.)	Malfunction
0.0	• Mass Air flow meter power source open • VG circuit open or short
359.0 or more	• VG - circuit open

WIRING DIAGRAM

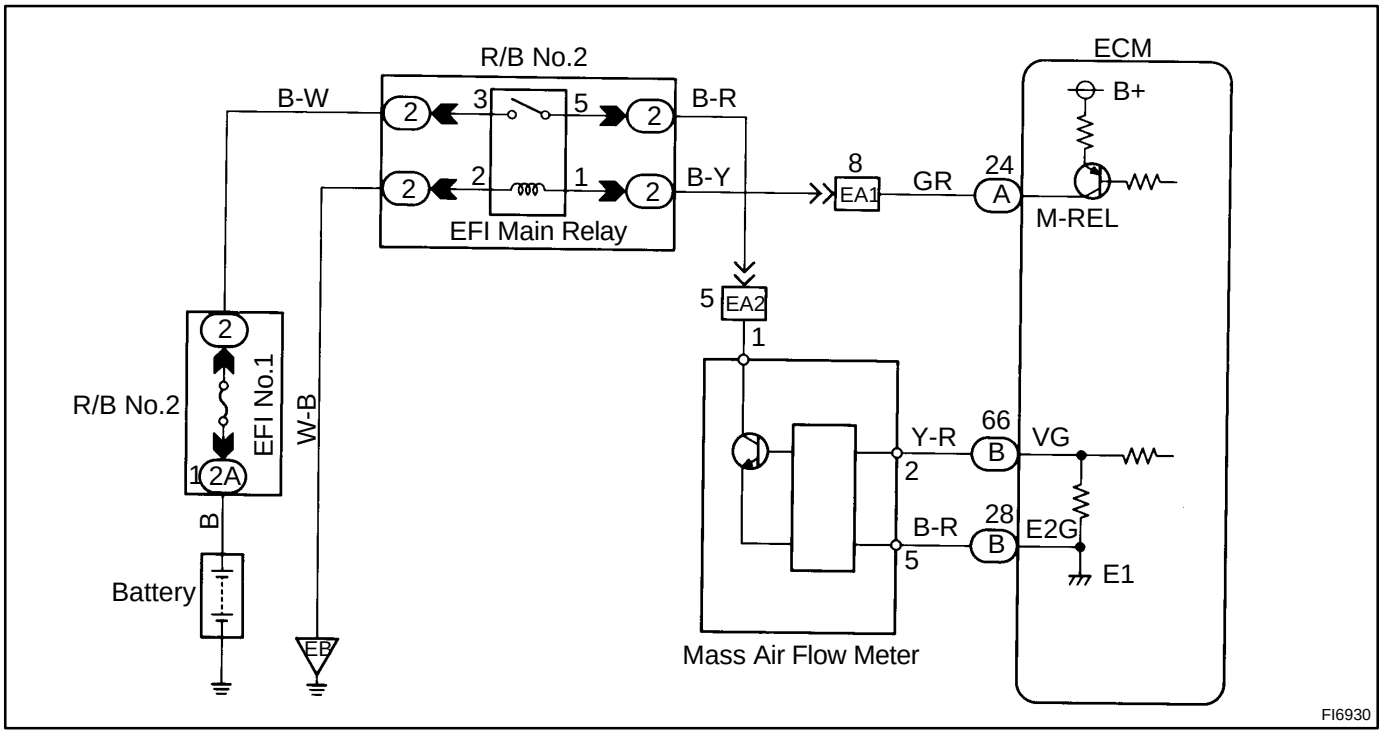

INSPECTION PROCEDURE

1	**Connect the OBD II scan tool or TOYOTA hand-held tester, and read value of mass air flow rate.**

RESULT:

(a) Connect the OBD II scan tool or TOYOTA hand-held tester to the DLC3.
(b) Turn ignition switch ON and push the OBD II scan tool or TOYOTA hand-held tester main switch ON.
(c) Start the engine.

CHECK:

Read mass air flow rate on the OBD II scan tool or TOYOTA hand-held tester.

RESULT:

	Type I	Type II
Mass air flow rate	0.0 gm / sec.	359.0 gm / sec. or more

Type I	**Go to step 2.**
Type II	**Go to step 5.**

2	Check voltage of mass air flow meter power source.

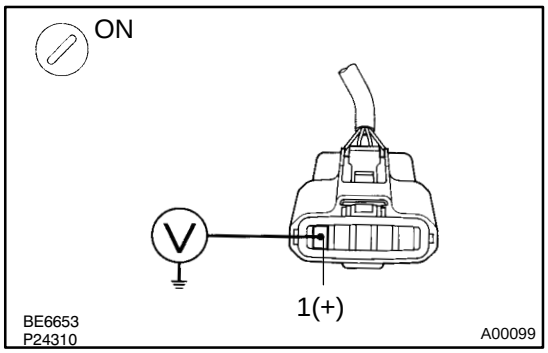

PREPARATION:

(a) Disconnect the mass air flow meter connector.

(b) Turn ignition switch ON.

CHECK:

Measure voltage between terminal 1 of mass air flow meter connector and body ground.

OK:

Voltage: 9 - 14 V

NG	Check for open in harness and connector between EFI main relay (Marking: EFI MAIN) and mass air flow meter (See page IN-28).

OK

3	Check voltage between terminal VG of ECM and body ground.

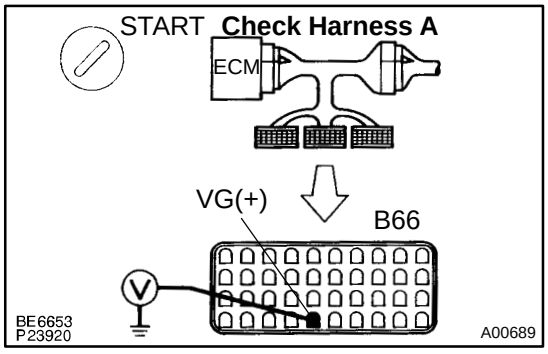

PREPARATION:

(a) Connect Check Harness A (See page DI-164).

(b) Start the engine.

CHECK:

Measure voltage between terminal VG of ECM and body ground while engine is idling, transmission is in park or neutral position and A/C switch is OFF.

OK:

Voltage: 1.1 - 1.5 V

OK	Check and replace ECM (See page IN-28).

NG

4	**Check for open and short in harness and connector between mass air flow meter and ECM (See page IN-28).**

NG → **Repair or replace harness or connector.**

OK

Replace mass air flow meter.

5	**Check continuity between terminal E2G of ECM and body ground.**

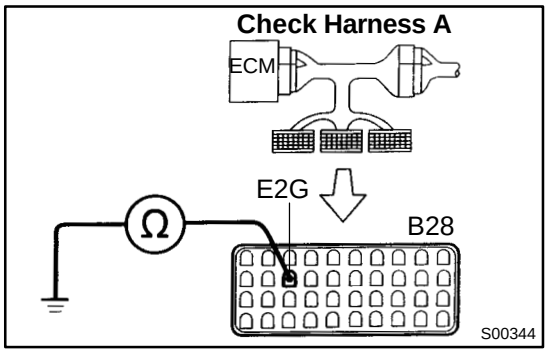

PREPARATION:
Connect Check Harness A (See page DI-164).
CHECK:
Check continuity between terminal E2G of ECM and body ground.
OK:
Continuity (1 Ω or less)

NG → **Check and replace ECM (See page IN-28).**

OK

6	**Check for open in harness and connector between mass air flow meter and ECM (See page IN-28).**

NG → **Repair or replace harness or connector.**

OK

Replace mass air flow meter.

DI4SN-01

DTC	P0101	Mass Air Flow Circuit Range / Performance Problem

CIRCUIT DESCRIPTION

Refer to ”Mass Air Flow Circuit Malfunction” on page DI-170 .

DTC No.	DTC Detecting Condition	Trouble Area
P0101	Conditions (a), (b) and (c) continue with engine speed 900 rpm or less: (2 trip detection logic) (a) Closed throttle position switch: ON (b) Mass air flow meter output > 2.2 V (c) Engien coolant temp. ≧ 70˚C	• Mass air flow meter
	Conditions (a) and (b) continue with engine speed 1,500 rpm or more: (2 trip detection logic) (a) Mass air flow meter output < 1.0 V (b) VTA ≧ 0.72 V	

WIRING DIAGRAM

Refer to page DI-170 or the WARNING DIAGRAM.

INSPECTION PROCEDURE

1	Are there any other codes (besides DTC P0101) being output?

YES → Go to relevant DTC chart.

NO →

Replace mass air flow meter.

DI4SO-01

DTC	P0110	Intake Air Temp. Circuit Malfunction

CIRCUIT DESCRIPTION

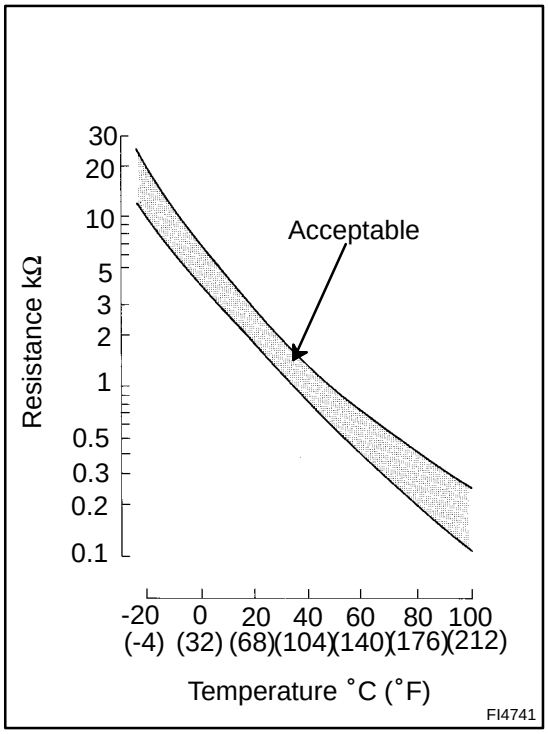

The intake air temperature sensor is built into the air flow meter and senses the intake air temperature.
A thermistor built in the sensor changes the resistance value according to the intake air temperature.
The lower the intake air temperature, the greater the thermistor resistance value, and the higher the intake air temperature, the lower the thermistor resistance value (See Fig. 1).
The intake air temperature sensor is connected to the ECM. The 5 V power source voltage in the ECM is applied to the intake air temperature sensor from the terminal THA via a resistor R.
That is , the resistor R and the intake air temperature sensor are connected in series. When the resistance value of the intake air temperature sensor changes in accordance with changes in the intake air temperature, the potential at terminal THA also changes. Based on this signal, the ECM increases the fuel injection volume to improve driveability during cold engine operation.
If the ECM detects the DTC "P0110", it operates the fail safe function in which the intake air temperature is assumed to be 20˚C (68˚F).
<Reference>

Intake Air Temp. ˚C (˚F)	Resistance (kΩ)	Voltage (V)
-20 (-4)	16.2	4.3
0 (32)	5.9	3.4
20 (68)	2.5	2.4
40 (104)	1.1	1.4
60 (140)	0.6	0.9
80 (176)	0.3	0.5
100 (212)	0.1	0.2

DTC No.	DTC Detecting Condition	Trouble Area
P0110	Open or short in intake air temp. sensor circuit	• Open or short in intake air temp. sensor circuit • Intake air temp. sensor • ECM

HINT:
After confirming DTC P0110 use the OBD II scan tool or TOYOTA hand-held tester to confirm the intake air temperature from "CURRENT DATA".

Temperature Displayed	Malfunction
- 40˚C (- 40˚F)	Open circuit
140˚C (284˚F) or more	Short circuit

WIRING DIAGRAM

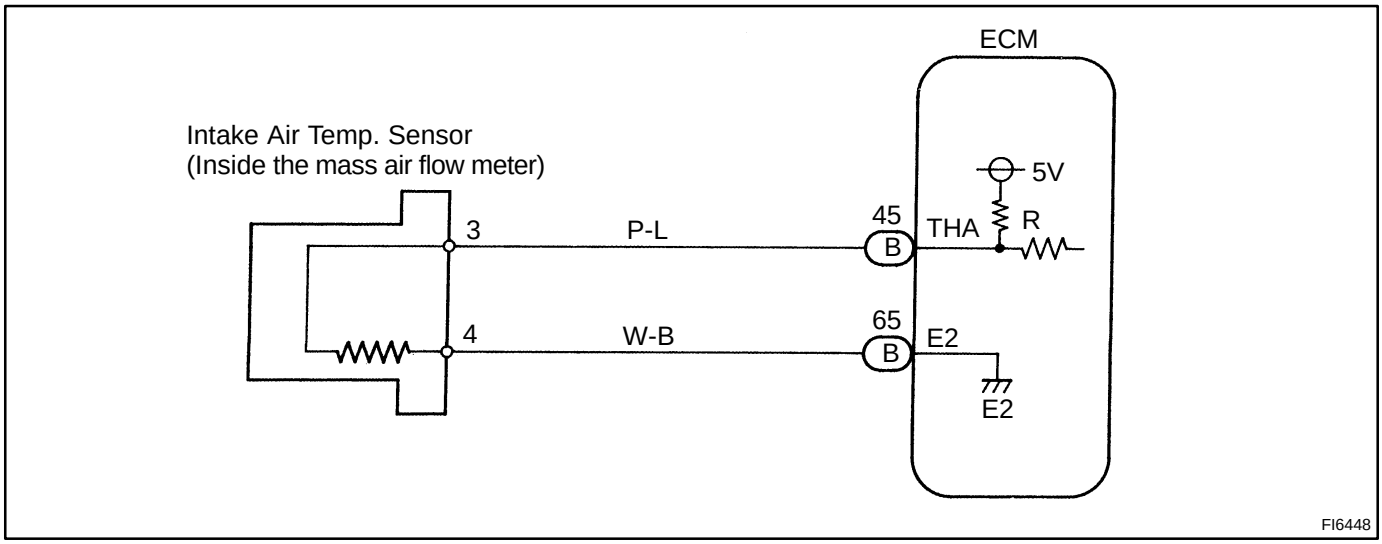

INSPECTION PROCEDURE

HINT:

- If DTC "P0110" (Intake Air Temp. Circuit Malfunction), "P0115" (Engine Coolant Temp. Circuit Malfunction), "P0120" (Throttle/Pedal Position Sensor/Switch "A" Circuit Malfunction), are output simultaneously, E2 (sensor ground) may be open.

1	**Connect the OBD II scan tool or TOYOTA hand-held tester, and read value of intake air temperature.**

PREPARATION:

(a) Connect the OBD II scan tool or TOYOTA hand-held tester to the DLC3.

(b) Turn ignition switch ON and push the OBD II scan tool or TOYOTA hand-held tester main switch ON.

CHECK:

Read temperature value on the OBD II scan tool or TOYOTA hand-held tester.

OK:

Same as actual intake air temperature.

HINT:

- If there is open circuit, OBD II scan tool or TOYOTA hand-held tester indicates - 40˚C (- 40˚F).
- If there is short circuit, OBD II scan tool or TOYOTA hand-held tester indicates 140˚C (284˚F) or more.

NG → **- 40 ˚C (- 40 ˚F) ..... Go to step 2.**
140 ˚C (284 ˚F) or more .. Go to step 4.

OK

Check for intermittent problems.
(See page DI-147)

2	Check for open in harness or ECM.

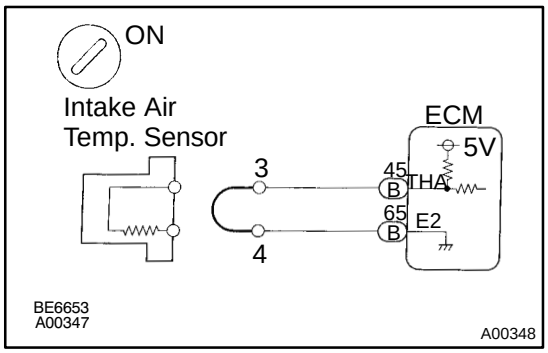

PREPARATION:

(a) Disconnect the mass air flow meter connector.
(b) Connect sensor wire harness terminals together.
(c) Turn ignition switch ON.

CHECK:

Read temperature value on the OBD II scan tool or TOYOTA hand-held tester.

OK:

Temperature value: 140˚C (284˚F) or more

OK	Confirm good connection at sensor. If OK, replace mass air flow meter.

NG

3	Check for open in harness or ECM.

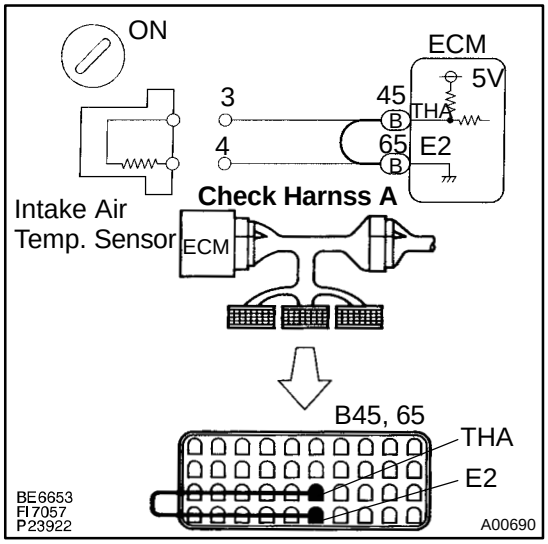

PREPARATION:

(a) Connect Check Harness A (See page DI-164).
(b) Connect between terminals THA and E2 of ECM connector.

HINT:

Mass air flow meter connector is disconnected. Before checking, do a visual and contact pressure check for the ECM connector (See page IN-28).

(c) Turn ignition switch ON.

CHECK:

Read temperature value on the OBD II scan tool or TOYOTA hand-held tester.

OK:

Temperature value: 140˚C (284˚F) or more

OK	Open in harness between terminals E2 or THA, repair or replace harness.

NG

Confirm good connection at ECM.
If OK, replace ECM.

4	Check for short in harness and ECM.

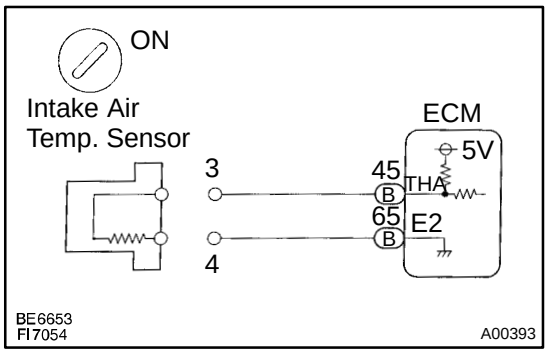

PREPARATION:

(a) Disconnect the mass air flow meter connector.

(b) Turn ignition switch ON.

CHECK:

Read temperature value on the OBD II scan tool or TOYOTA hand-held tester.

OK:

Temperature value: - 40˚C (- 40˚F).

OK	Replace mass air flow meter.

NG

5	Check for short in harness or ECM.

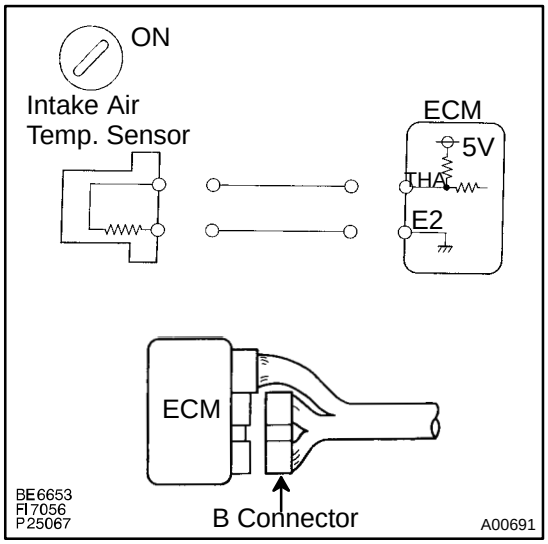

PREPARATION:

(a) Disconnect the B connector from ECM (See page DI-164).

HINT:

Mass air flow meter connector is disconnected.

(b) Turn ignition switch ON.

CHECK:

Read temperature value on the OBD II scan tool or TOYOTA hand-held tester.

OK:

Temperature value: - 40˚C (- 40˚F)

OK	Repair or replace harness or connector.

NG

Check and replace ECM (See page IN-28).

DI4SP-01

DTC	P0115	Engine Coolant Temp. Circuit Malfunction

CIRCUIT DESCRIPTION

A thermistor built into the engine coolant temperature sensor changes the resistance value according to the engine coolant temperature.

The structure of the sensor and connection to the ECM is the same as in the intake air temperature circuit malfunction shown on page DI-175 .

If the ECM detects the DTC P0115, it operates the fail safe function in which the engine coolant temperature is assumed to be 80˚C (176˚F).

DTC No.	DTC Detecting Condition	Trouble Area
P0115	Open or short in engine coolant temp. sensor circuit	• Open or short in engine coolant temp. sensor circuit • Engine coolant temp. sensor • ECM

HINT:

After confirming DTC P0115 use the OBD II scan tool or TOYOTA hand-held tester to confirm the engine coolant temperature from ”CURRENT DATA”.

Temperature Displayed	Malfunction
- 40˚C (- 40˚F)	Open circuit
140˚C (284˚F) or more	Short circuit

WIRING DIAGRAM

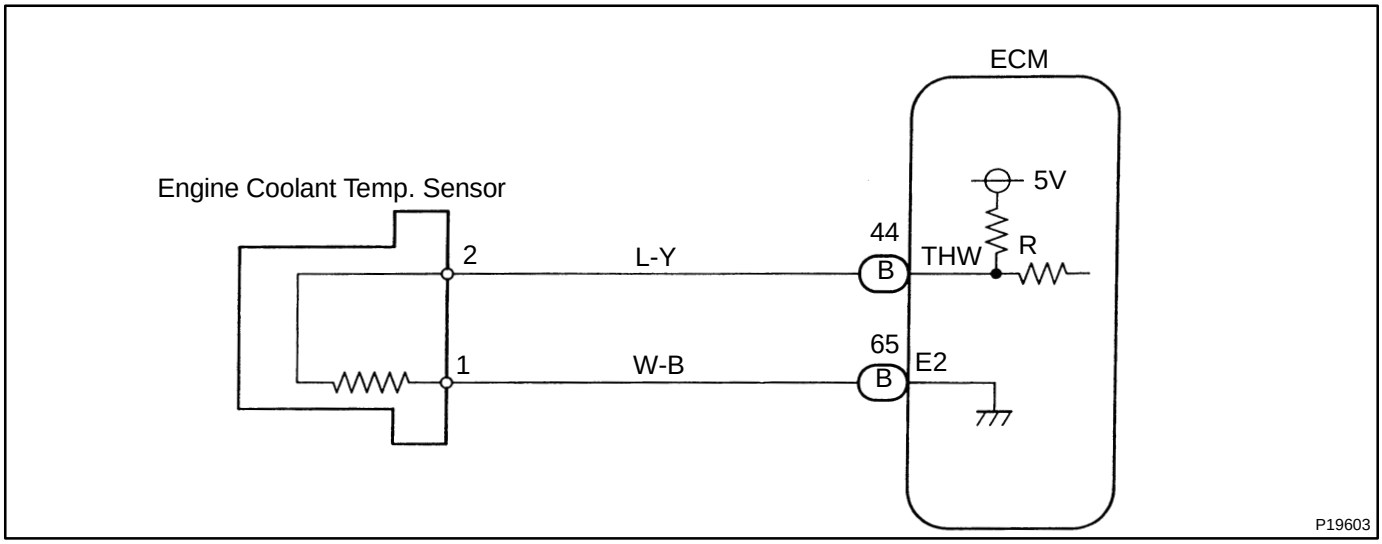

INSPECTION PROCEDURE

HINT:

- If DTC ”P0110” (Intake Air Temp. Circuit Malfunction), ”P0115” (Engine Coolant Temp. Circuit Malfunction), ”P0120” (Throttle/Pedal Position Sensor/Switch ”A” Circuit Malfunction) are output simultaneously, E2 (sensor ground) may be open.

1	**Connect the OBD II scan tool or TOYOTA hand-held tester, and read value of engine coolant temperature.**

PREPARATION:

(a) Connect the OBD II scan tool or TOYOTA hand-held tester to the DLC3.

(b) Turn ignition switch ON and push the OBD II scan tool or TOYOTA hand-held tester main switch ON.

CHECK:

Read temperature value on the OBD II scan tool or TOYOTA hand-held tester.

OK:

Same as actual engine coolant temperature.

HINT:

- If there is open circuit, OBD II scan tool or TOYOTA hand-held tester indicates - 40˚C (- 40˚F).
- If there is short circuit, OBD II scan tool or TOYOTA hand-held tester indicates 140˚C (284˚F) or more.

NG → **- 40˚C (- 40˚F) ..... Go to step 2.**
140˚C (284˚F) or more .... Go to step 4.

OK

Check for intermittent problems
(See page DI-147).

2	**Check for open in harness or ECM.**

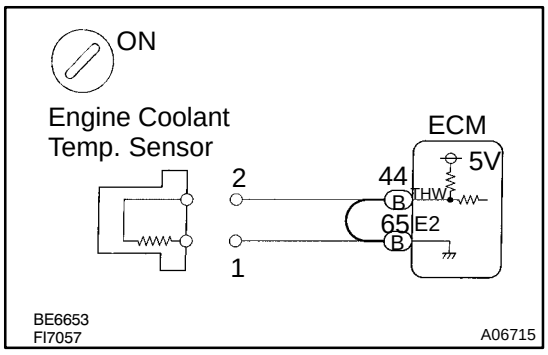

PREPARATION:

(a) Disconnect the engine coolant temp. sensor connector.

(b) Connect sensor wire harness terminals together.

(c) Turn ignition switch ON.

CHECK:

Read temperature value on the OBD II scan tool or TOYOTA hand-held tester.

OK:

Temperature value: 140˚C (284˚F) or more

OK → **Confirm good connection at sensor. If OK, replace engine coolant temp. sensor.**

NG

3	Check for open in harness or ECM.

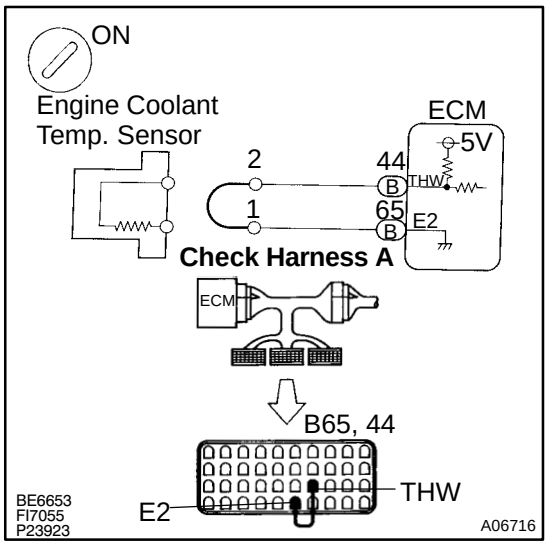

PREPARATION:

(a) Connect Check Harness A (See page DI-164).

(b) Connect between terminals THW and E2 of ECM connector.

HINT:

Engine coolant temp. sensor connector is disconnected. Before checking, do a visual and contact pressure check for the ECM connector (See page IN-28).

(c) Turn ignition switch ON.

CHECK:

Read temperature value on the OBD II scan tool or TOYOTA hand-held tester.

OK:

Temperature value: 140˚C (284˚F) or more

OK	Open in harness between terminals E2 or THW, repair or replace harness.

NG

Confirm good connection at ECM.
If OK, replace ECM.

4	Check for short in harness and ECM.

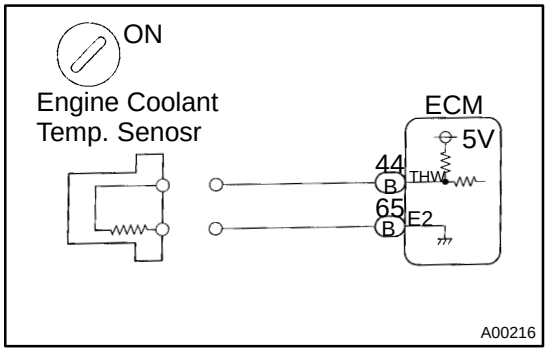

PREPARATION:

(a) Disconnect the engine coolant temp. sensor connector.

(b) Turn ignition switch ON.

CHECK:

Read temperature value on the OBD II scan tool or TOYOTA hand-held tester.

OK:

Temperature value: - 40˚C (- 40˚F)

OK	Replace engine coolant temp. sensor.

NG

5	Check for short in harness or ECM.

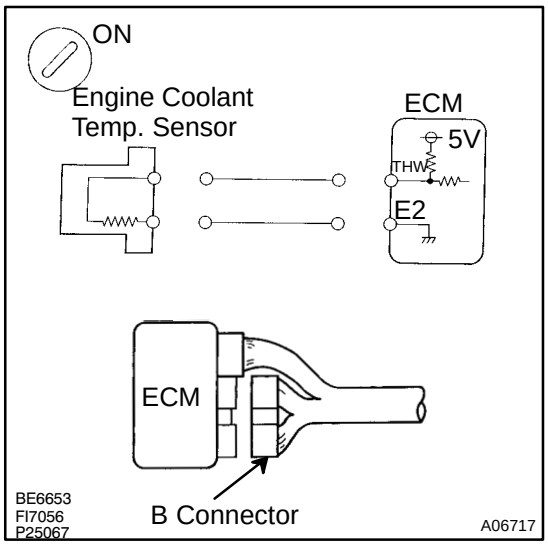

PREPARATION:

(a) Disconnect the B connector of ECM (See page DI-164).

HINT:

Engine coolant temp. sensor connector is disconnected.

(b) Turn ignition switch ON.

CHECK:

Read temperature value on the OBD II scan tool or TOYOTA hand-held tester.

OK:

Temperature value: - 40˚C (- 40˚F)

OK → **Repair or replace harness or connector.**

NG

Check and replace ECM (See page IN-28).

DI4SQ-01

DTC	P0116	Engine Coolant Temp. Circuit Range/ Performance Problem

CIRCUIT DESCRIPTION

Refer to "Engine Coolant Temp. Circuit Malfunction" on page DI-179 .

DTC No.	DTC Detecting Condition	Trouble Area
P0116	When the engine starts, the water temp. is -7°C (20°F) or less. And, 20 min. or more after the engine starts, the engine coolant temp. sensor value is 20°C (68°F) or less (2 trip detection logic)	• Engine coolant temp. sensor • Cooling system
	When the engine starts, the water temp. is between -7°C (20°F) and 10°C (50°F). And, 5 min. or more after the engine starts, the engine coolant temp. sensor value is 20°C (68°F) or less (2 trip detection logic)	
	When the engine starts, the water temp. is 10°C (50°F) or more. And, 2 min. or more after the engine starts, the engine coolant temp. sensor value is 20°C (68°F) or less (2 trip detection logic)	

INSPECTION PROCEDURE

HINT:

If DTC "P0115" (Engine Coolant Temp. Circuit Malfunction) and "P0116" (Engine Coolant Temp. Circuit Range/Performance) are output simultaneously, engine coolant temp. sensor circuit may be open. Perform troubleshooting of DTC P0115 first.

1	Are there any other codes (besides DTC P0116) being output?

YES → Go to relevant DTC chart.

NO

2	Check thermostat (See page CO-15).

NG → Replace thermostat.

OK

Replace engine coolant temp. sensor.

DI4SR-01

DTC	P0120	Throttle/Pedal Position Sensor/Switch "A" Circuit Malfunction

CIRCUIT DESCRIPTION

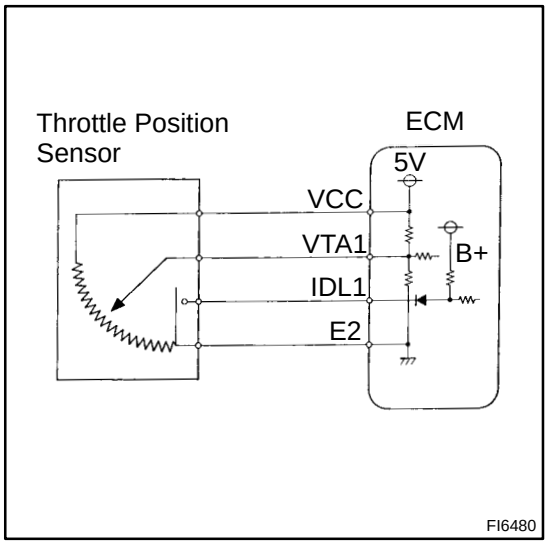

The throttle position sensor is mounted in the throttle body and detects the throttle valve opening angle. When the throttle valve is fully closed, the IDL1 contacts in the throttle position sensor are on, so the voltage at the terminal IDL1 of the ECM becomes 0 V. At this time, a voltage of approximately 0.7 V is applied to terminal VTA1 of the ECM. When the throttle valve is opened, the IDL1 contacts go off and thus the power source voltage of approximately 12 V in the ECM is applied to the terminal IDL1 of the ECM. The voltage applied to the terminal VTA1 of the ECM increases in proportion to the opening angle of the throttle valve and becomes approximately 3.2 - 4.9 V when the throttle valve is fully opened. The ECM judges the vehicle driving conditions from these signals input from terminals VTA1 and IDL1, and uses them as one of the conditions for deciding the air-fuel ratio correction, power increases correction and fuel-cut control etc.

DTC No.	DTC Detecting Condition	Trouble Area
P0120	Condition (a) or (b) conditions: (a) VTA < 0.25 V, and closed throttle position switch is OFF (b) VTA > 4.9 V	• Open or short in throttle position sensor circuit • Throttle position sensor • ECM

HINT:

- If there is open circuit in IDL line, DTC P0120 does not indicate.
- After confirming DTC P0120 use the OBD II scan tool or TOYOTA hand-held tester to confirm the throttle valve opening percentage and closed throttle position switch condition.

Throttle valve opening position expressed as percentage		Trouble Area
Throttle valve fully closed	Throttle valve fully open	
0 %	0 %	VC line open VTA1 line open or short
Approx. 100 %	Approx. 100 %	E2 line open

WIRING DIAGRAM

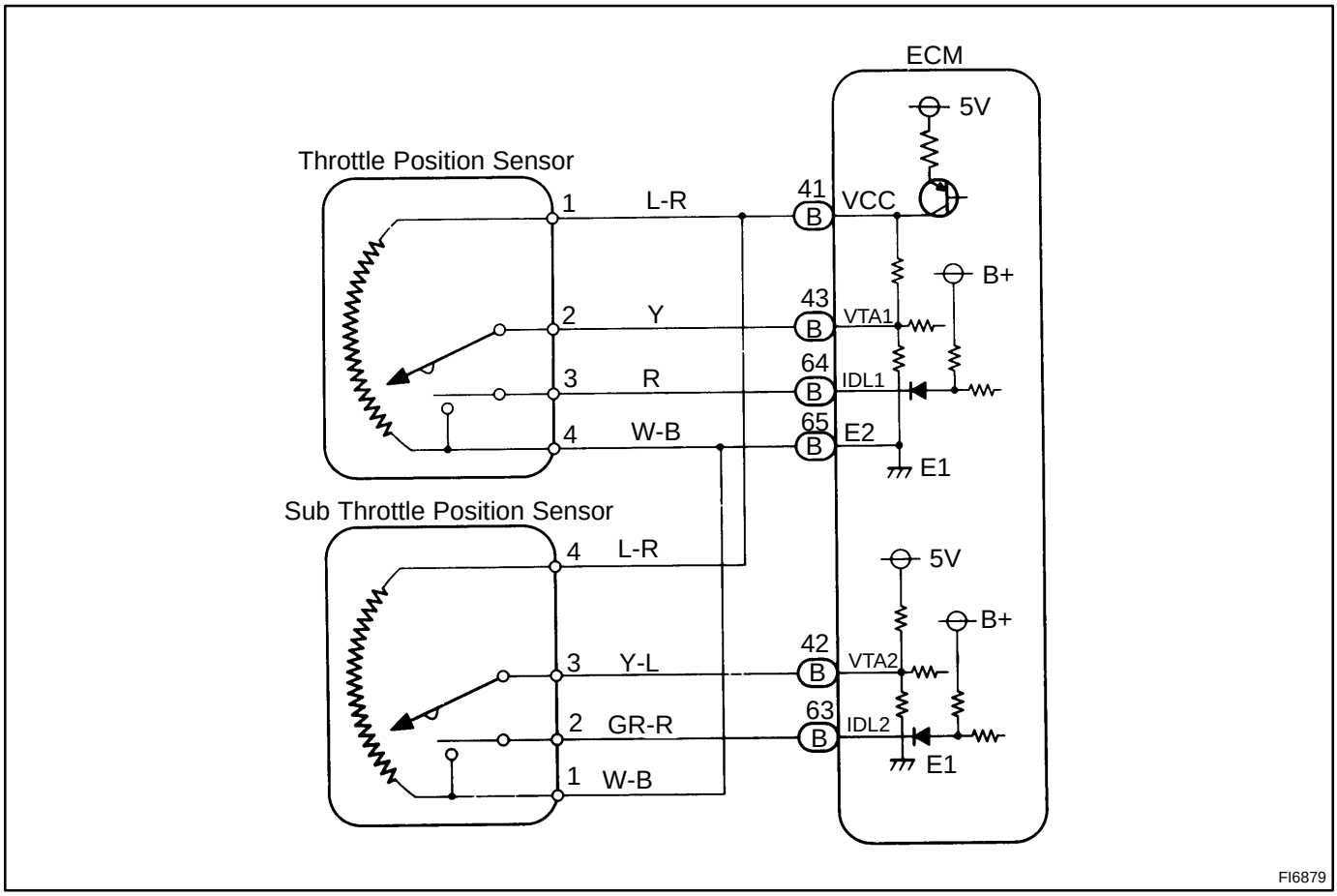

INSPECTION PROCEDURE

HINT:

If DTC P0110, P0115 and P0120 are output simultaneously, E2 (sensor ground) may be open.

1	**Connect the OBD II scan tool or TOYOTA hand-held tester and read the throttle valve opening percentage.**

PREPARATION:

(a) Connect the OBD II scan tool or TOYOTA hand-held tester to the DLC 3.

(b) Turn ignition switch ON and push the OBD II scan tool or TOYOTA hand-held tester main switch ON.

CHECK:

Read the throttle valve opening percentage.

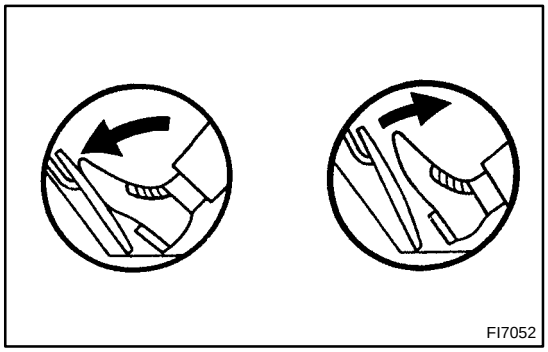

OK:

Throttle valve	Throttle valve opening position expressed as percentage
Fully open	Approx. 70 %
Fully closed	Approx. 10 %

OK → **Check for intermittent problems (See page DI-147).**

NG

2	**Check voltage between terminal 1 of wire harness side connector and body ground.**

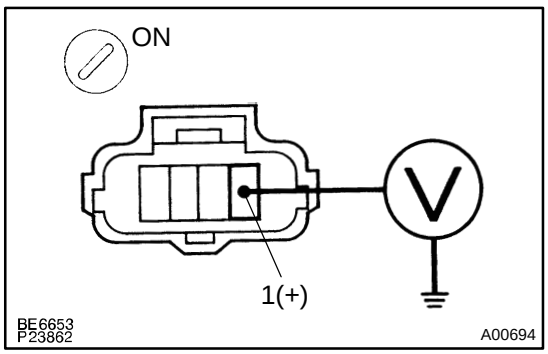

PREPARATION:

(a) Disconnect the throttle position sensor connector.

(b) Turn ignition switch ON.

CHECK:

Measure voltage between terminal 1 of wire harness side connector and body ground.

OK:

Voltage: 4.5 - 5.5 V

NG → **Go to step 5.**

OK

3	Check throttle position sensor.

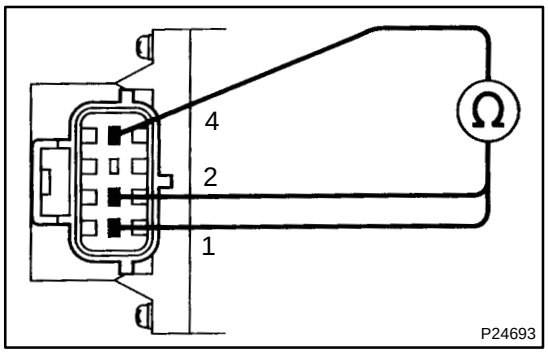

PREPARATION:

Disconnect the throttle position sensor connector.

CHECK:

Measure resistance between terminals 1, 2 and 4 of throttle position sensor.

OK:

Terminals	Throttle valve	Resistance
1 - 4	-	3.1 - 7.2 kΩ
2 - 4	Fully closed	0.34 - 6.3 kΩ
	Fully open	2.4 - 11.2 kΩ

NG → **Replace throttle position sensor (See page SF-44).**

OK ↓

4	Check voltage between terminals VTA1 and E2 of ECM.

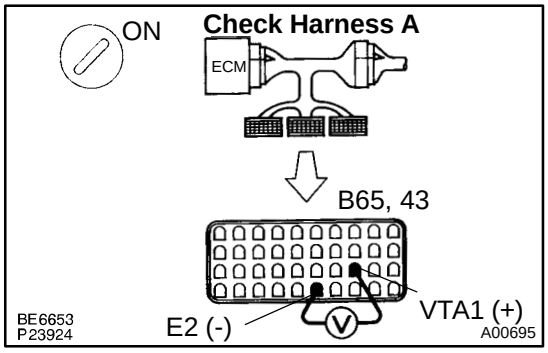

PREPARATION:

(a) Connect Check Harness A (See page DI-164).

(b) Turn ignition switch ON.

CHECK:

Measure voltage between terminals VTA1 and E2 of ECM.

OK:

Throttle Valve	Voltage
Fully closed	0.3 - 0.8 V
Fully open	3.2 - 4.9 V

NG → **Check for open and short in harness and connector between ECM and throttle position sensor (VTA line) (See page IN-28).**

OK ↓

Check and replace ECM (See page IN-28).

5	Check voltage between terminals VCC and E2 of ECM.

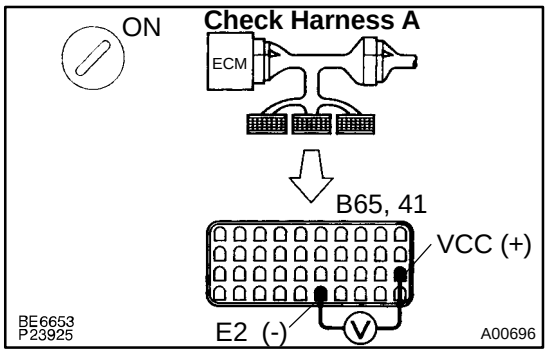

PREPARATION:

(a) Connect Check Harness A (See page DI-164).

(b) Turn ignition switch ON.

CHECK:

Measure voltage between terminals VCC and E2 of ECM connector.

OK:

Voltage 4.5 - 5.5 V

NG → **Check and replace ECM (See page IN-28).**

OK

Check for open in harness and connector between ECM and sensor (VC line) (See page IN-28).

DI4SS-01

DTC	P0121	Throttle/Pedal Position Sensor/Switch ”A” Circuit Range/Performance Problem

CIRCUIT DESCRIPTION

Refer to ”Throttle/Pedal Position Sensor/Switch ”A” circuit malfunction” on page DI-184 .

DTC No.	DTC Detecting Condition	Trouble Area
P0121	After the vehicle speed has been exceeded 30 km/h (19 mph) even once, the output value of the throttle position sensor is out of the applicable range while the vehicle speed between 30 km/h (19 mph) and 0 km/h (0 mph) (2 trip detection logic)	• Throttle position sensor

INSPECTION PROCEDURE

1	Are there any other codes (besides DTC P0121) being output?

YES → Go to relevant DTC chart.

NO

Replace throttle position sensor.

DTC	P0125	Insufficient Coolant Temp. for Closed Loop Fuel Control

CIRCUIT DESCRIPTION

To obtain a high purification rate for the CO, HC and NOx components of the exhaust gas, a three-way catalytic converter is used, but for the most efficient use of the three-way catalytic converter, the air-fuel ratio must be precisely controlled so that it is always close to the stoichiometric air-fuel ratio.
The oxygen sensor has the characteristic whereby its output voltage changes suddenly in the vicinity of the stoichiometric air-fuel ratio. This characteristic is used to detect the oxygen concentration in the exhaust gas and provide feedback to the computer for control of the air-fuel ratio.
When the air-fuel ratio becomes LEAN, the oxygen concentration in the exhaust increases and the oxygen sensor informs the ECM of the LEAN condition (small electromotive force: 0 V).
When the air-fuel ratio is RICHER than the stoichiometric air-fuel ratio the oxygen concentration in the exhaust gas is reduced and the oxygen sensor informs the ECM of the RICH condition (large electromotive force: 1 V).
The ECM judges by the electromotive force from the oxygen sensor whether the air-fuel ratio is RICH or LEAN and controls the injection time accordingly. However, if malfunction of the oxygen sensor causes output of abnormal electromotive force, the ECM is unable to perform accurate air-fuel ratio control.
The heated oxygen sensors include a heater which heats the Zirconia element. The heater is controlled by the ECM. When the intake air volume is low (the temperature of the exhaust gas is low) current flows to the heater to heat the sensor for accurate oxygen concentration detection.

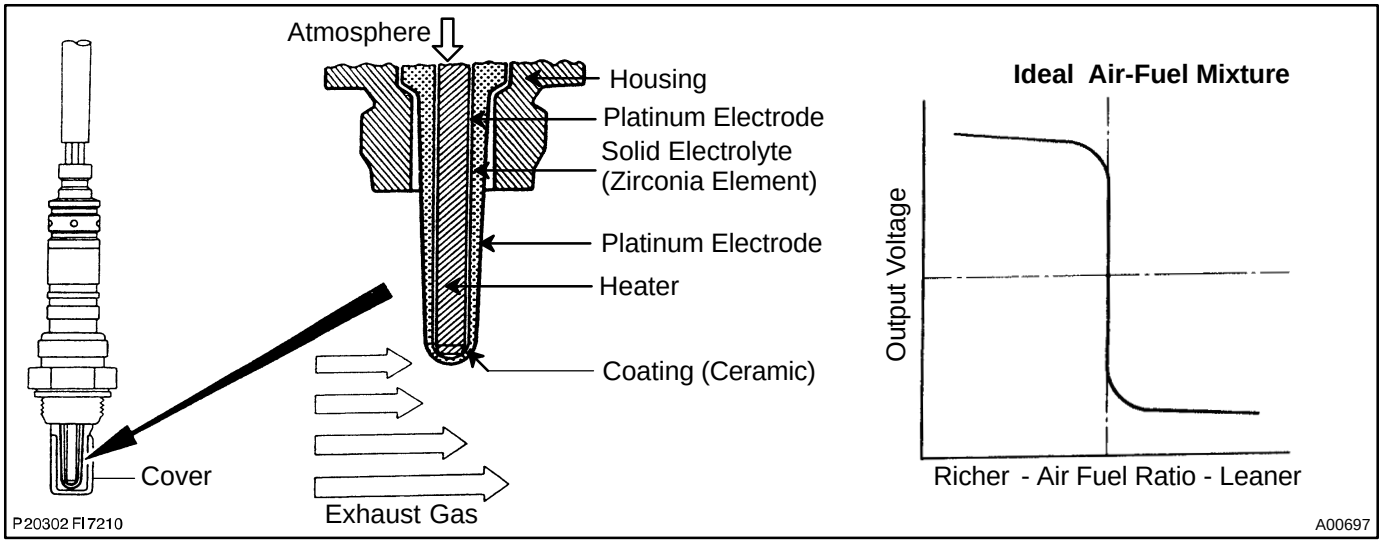

DTC No.	DTC Detecting Condition	Trouble Area
P0125	After the engine is warmed up, heated oxygen sensor output does not indicate RICH even once when conditions (a), (b) and (c) continue for at least 2 min. : (a) Engine speed: 1,500 rpm or more (b) Vehicle speed: 40 - 100 km/h (25 - 62 mph) (c) Closed throttle position SW: OFF	• Open or short in heated oxygen sensor circuit • Heated oxygen sensor

HINT:
After confirming DTC P0125 use the OBD II scan tool or TOYOTA hand-held tester to confirm voltage output of heated oxygen sensor from ”CURRENT DATA”.
If voltage output of heated oxygen sensor is 0 V, heated oxygen sensor circuit may be open or short.

WIRING DIAGRAM

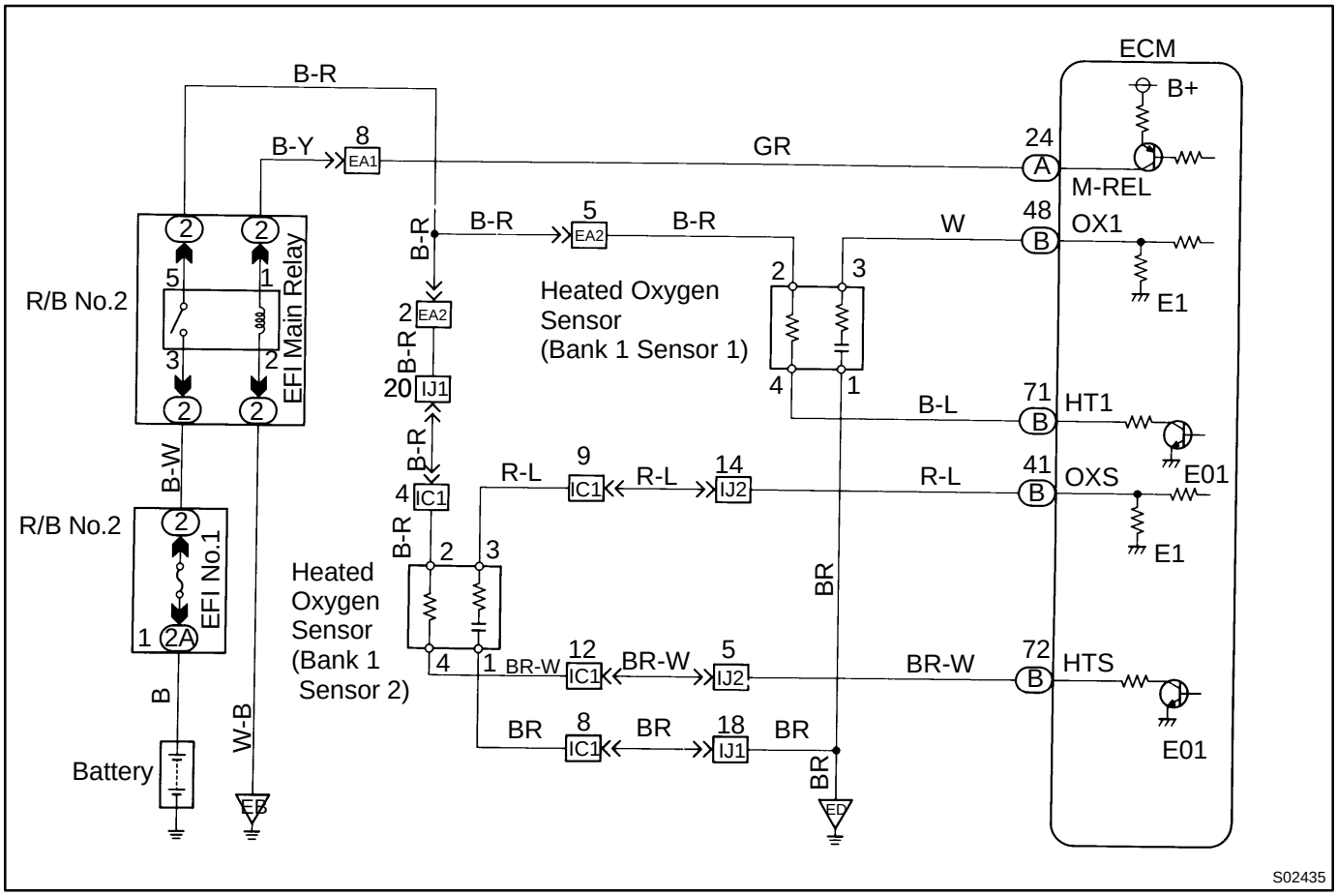

INSPECTION PROCEDURE

1	**Connect the OBD II scan tool or TOYOTA hand-held tester and read value for voltage output of heated oxygen sensor.**

PREPARATION:

(a) Connect the OBD II scan tool or TOYOTA hand-held tester to the DLC 3.

(b) Warm up engine to normal operation temperature.

CHECK:

Read voltage output of heated oxygen sensor (bank 1 sensor 1) when engine is suddenly raced.

HINT:

Perform quick racing to 4,000 rpm 3 times using accelerator pedal.

OK:

Both heated oxygen sensors (bank 1 sensor 1) output a RICH signal (0.45 V or more) at least once.

OK → **Check and replace ECM (See page IN-28).**

NG

2	**Check for open and short in harness and connector between ECM and heated oxygen sensor (See page IN-28).**

NG → **Repair or replace harness or connector.**

OK

Replace heated oxygen sensor.

DI4SU-01

DTC	P0130	Heated Oxygen Sensor Circuit Malfunction (Bank 1 Sensor 1)

CIRCUIT DESCRIPTION

Refer to ”Insufficient Coolant Temp. for Closed Loop Fuel Control” on page DI-190 .

DTC No.	DTC Detecting Condition	Trouble Area
P0130	Voltage output of heated oxygen sensor remains at 0.4 V or more, or 0.55 V or less, during idling after the engine is warmed up (2trip detection logic)	• Heated oxygen sensor • Fuel trim malfunction

HINT:

- Bank 1 refers to the bank that includes cylinder No.1.
- Sensor 1 refers to the sensor closer to the engine body.

The heated oxygen sensor output voltage and the short-term fuel trim value can be read using the OBD II scan tool or TOYOTA hand-held tester.

WIRING DIAGRAM

Refer to page DI-190 for the WIRING DIAGRAM.

CONFIRMATION DRIVING PATTEN

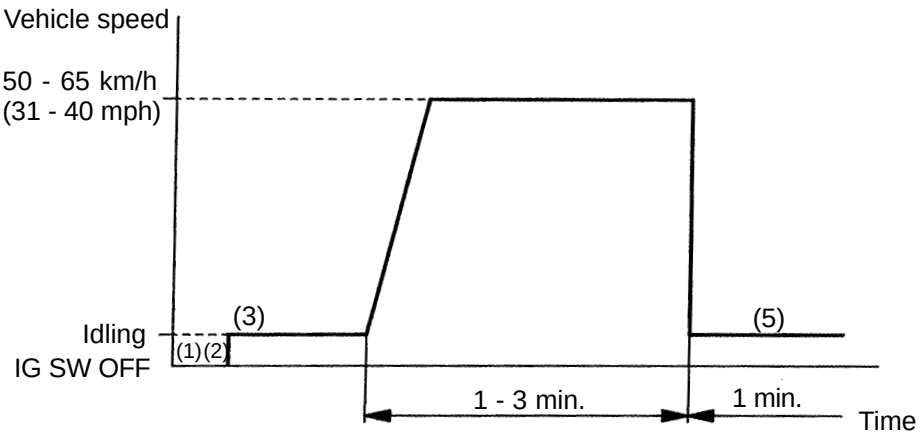

FI7130

(1) Connect the TOYOTA hand-held tester to the DLC3.
(2) Switch the TOYOTA hand-held tester from normal mode to check mode (See page DI-147).
(3) Start the engine and warm it up with all accessory switches OFF.
(4) Drive the vehicle at 50 - 65 km/h (31 - 40 mph) for 1 - 3 min. to warm up the heated oxygen sensor.
(5) Let the engine idle for 1 min.

HINT:

If a malfunction exists, the MIL will light up during step (5).

NOTICE:

If the conditions in this test are not strictly followed, detection of the malfunction will not be possible. If you do not have a TOYOTA hand-held tester, turn the ignition switch OFF after performing steps (3) to (5), then perform steps (3) to (5) again.

INSPECTION PROCEDURE

1	**Check for open and short in harness and connector between ECM and heated oxygen sensor (See page IN-28).**

NG → **Repair or replace harness or connector.**

OK

2	**Check for heated oxygen sensor data.**

PREPARATION:

(a) Connect the OBD II scan tool or TOYOTA hand-held tester to the DLC 3.

(b) Warm up engine to normal operating temperature.

CHECK:

Read the heated oxygen sensor output voltage and short-term fuel trim.

RESULT:

Pattern	Heated oxygen sensor output voltage	Short-term fuel trim
1	Lean condition (Changes at 0.55 V or less)	Changes at about +20 %
2	Rich condition (Changes at 0.4 V or more)	Changes at about -20 %
3	Except 1 and 2	

1, 2 → **Check fuel trim system (See page DI-201).**

3

3	**Check the output voltage of heated oxygen sensor during idling.**

PREPARATION:

Warm up the heated oxygen sensor with the engine at 2,500 rpm for approx. 90 sec.

CHECK:

Use the OBD II scan tool or TOYOTA hand-held tester read the output voltage of the heated oxygen sensor during idling.

OK:

Heated oxygen sensor output voltage:
Alternates repeatedly between less than 0.4 V and more than 0.55 V (See the following table).

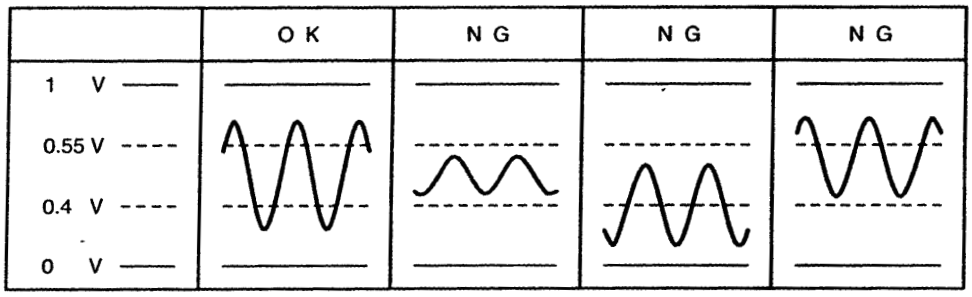

P18349

OK → **Perform confirmation driving pattern (See page DI-193).**

NG

Replace heated oxygen sensor.

DI4SV-01

DTC	P0133	Heated Oxygen Sensor Circuit Slow Response (Bank 1 Sensor 1)

CIRCUIT DESCRIPTION

Refer to ”Insufficient Coolant Temp. for Closed Loop Fuel Control” on page DI-190 .

DTC No.	DTC Detecting Condition	Trouble Area
P0133	Response time for the heated oxygen sensor voltage output to change from rich to lean, or from lean to rich, is 1 sec. or more during idling after the engine is warmed up (2trip detection logic)	• Heated oxygen sensor

HINT:

- Bank 1 refers to the bank that includes cylinder No.1.
- Sensor 1 refers to the sensor closer to the engine body.

INSPECTION PROCEDURE

1	Are there any other codes (besides DTC P0133) being output?

YES → Go to relevant DTC chart.

NO →

Replace heated oxygen sensor.

DI4SW-01

DTC	P0135	Heated Oxygen Sensor Heater Circuit Malfunction (Bank 1 Sensor 1)

DTC	P0141	Heated Oxygen Sensor Heater Circuit Malfunction (Bank 1 Sensor 2)

CIRCUIT DESCRIPTION

Refer to "Insufficient Coolant Temp. for Closed Loop Fuel Control" on page DI-190 .

DTC No.	DTC Detecting Condition	Trouble Area
P0135 P0141	When the heater operates, heater current exceeds 2 A (2 trip detection logic)	• Open or short in heater circuit of heated oxygen sensor • Heated oxygen sensor heater • ECM
	Heater current of 0.25 A or less when the heater operates (2 trip detection logic)	

HINT:

- Bank 1 refers to the bank that includes cylinder No.1.
- Sensor 1 refers to the sensor closer to the engine body.
- Sensor 2 refers to the sensor farther away from the engine body.

WIRING DIAGRAM

Refer to page DI-190 for the WIRING DIAGRAM.

INSPECTION PROCEDURE

1	Check voltage between terminals HT1, HTS of ECM connector and body ground.

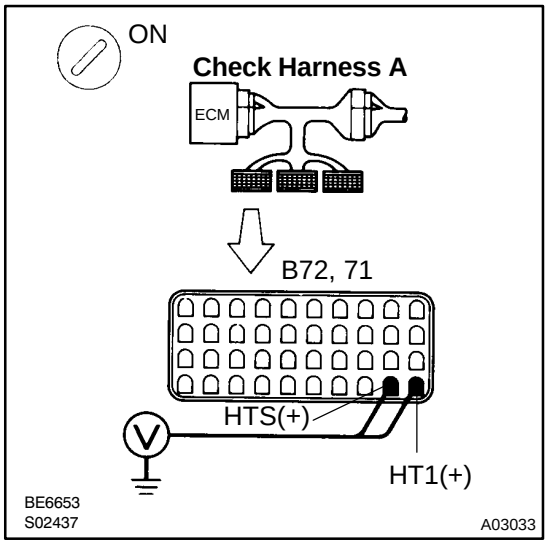

PREPARATION:

(a) Connect Check Harness A (See page DI-164).

(b) Turn ignition switch ON.

CHECK:

Measure voltage between terminals HT1, HTS of ECM connector and body ground.

HINT:

- Connect terminal HT1 to bank 1 sensor 1.
- Connect terminal HTS to bank 1 sensor 2.

OK:

Voltage: 9 - 14 V

OK	Check and replace ECM (See page IN-28).

NG

2	Check resistance of heated oxygen sensor heater (See page SF-82).

NG → Replace heated oxygen sensor.

OK

Check and repair harness or connector between EFI main relay (Making: EFI MAIN) and heated oxygen sensor and ECM.

DI4SX-01

DTC	P0136	Heated Oxygen Sensor Circuit Malfunction (Bank 1 Sensor 2)

CIRCUIT DESCRIPTION

Refer to ”Insufficient Coolant Temp. for Closed Loop Fuel Control” on page DI-190 .

DTC No.	DTC Detecting Condition	Trouble Area
P0136	Voltage output of the heated oxygen sensor (bank 1 sensor 2) remains at 0.4 V or more or 0.5 V or less when the vehicle is driven at 40 km/h (25 mph) or more after the engine is warmed up (2 trip detection logic)	• Heated oxygen sensor

HINT:

- Bank 1 refers to the bank that includes cylinder No.1.
- Sensor 2 refers to the sensor farther away from the engine body.

WIRING DIAGRAM

Refer to page DI-190 for the WIRING DIAGRAM.

INSPECTION PROCEDURE

1	**Are there any other codes (besides DTC P0136) being output?**

YES → **Go to relevant DTC chart.**

NO

2	**Check for open and short in harness and connector between ECM and heated oxygen sensor (See page IN-28).**

NG → **Repair or replace harness or connector.**

OK

3	**Check the output voltage of heated oxygen sensor (bank 1 sensor 2).**

PREPARATION:

(a) Connect the OBD II scan tool or TOYOTA hand-held tester to the DLC 3.

(b) Warm up engine to normal operating temperature.

CHECK:

Read the output voltage of heated oxygen sensor (bank 1 sensor 2) when engine is suddenly raced.

HINT:

Perform quick racing to 4,000 rpm for 3 min. using accelerator pedal.

OK:

Heated oxygen sensor output voltage: Alternates from 0.4 V or less to 0.5 V or more.

OK → **Check that each connector is properly connected.**

NG

Replace heated oxygen sensor (bank 1 sensor 2).

DI4SY-01

DTC	P0171	System too Lean (Fuel Trim)

DTC	P0172	System too Rich (Fuel Trim)

CIRCUIT DESCRIPTION

”Fuel trim” refers to the feedback compensation value compared against the basic injection time. Fuel trim includes short-term fuel trim and long-term fuel trim.
”Short-term fuel trim” is the short-term fuel compensation used to maintain the air-fuel ratio at its ideal theoretical value. The signal from the heated oxygen sensor indicates whether the air-fuel ratio is RICH or LEAN compared to the ideal theoretical value, triggering a reduction in fuel volume if the air-fuel ratio is rich, and an increase in fuel volume if it is lean.
”Long-term fuel trim” is overall fuel compensation carried out long-term to compensate for continual deviation of the short-term fuel trim from the central value due to individual engine differences, wear over time and changes in the usage environment.
If both the short-term fuel trim and long-term fuel trim are LEAN or RICH beyond a certain value, it is detected as a malfunction and the MIL lights up.

DTC No.	DTC Detecting Condition	Trouble Area
P0171	When the air fuel ratio feedback is stable after engine warning up, the fuel trim is considerably in error on the RICH side (2 trip detection logic)	• Air intake (hose loose) • Fuel line pressure • Injector blockage • Heated oxygen sensor malfunction • Mass air flow meter • Engine coolant temp. sensor
P0172	When the air fuel ratio feedback is stable after engine warning up, the fuel trim is considerably in error on the LEAN side (2 trip detection logic)	• Fuel line pressure • Injector blockage, leak • Heated oxygen sensor malfunction • Mass air flow meter • Engine coolant temp. sensor

HINT:

- When DTC P0171 is recorded, the actual air-fuel ratio is on the LEAN side. When DTC P0172 is recorded, the actual air-fuel ratio is on the RICH side.
- If the vehicle runs out of fuel, the air-fuel ratio is LEAN and DTC P0171 is recorded. The MIL then comes on.
- If the total of the short-term fuel trim value and long-term fuel trim value is within ± 35 %, the system is functioning normally.

INSPECTION PROCEDURE

1	**Check air induction system (See page SF-1).**

NG → **Repair or replace.**

OK

2	**Check for heated oxygen sensor data.**

PREPARATION:

(a) Connect the OBDII scan tool or TOYOTA hand-held tester to the DLC3.

(b) Warm up engine to normal operating temperature.

CHECK:

Read the heated oxygen sensor output voltage and short-term fuel trim.

HINT:

Read the values for the same bank.

RESULT:

Pattern	Heated oxygen sensor output voltage	Short-term fuel trim
1	Lean condition (Changes at 0.55 V or less)	Changes at about + 20 %
2	Rich condition (Changes at 0.4 V or more)	Changes at about - 20 %
3	Except 1 and 2	

3 → **Check for heated oxygen sensor (See page DI-193).**

1,2 ↓

3	**Check fuel pressure (See page SF-5).**

NG → **Check and repair fuel pump, pressure regulator, fuel pipe line and filter (See page SF-1).**

OK ↓

4	**Check injector injection (See page SF-25).**

NG → **Replace injector.**

OK ↓

5	**Check mass air flow meter and engine coolant temp. sensor (See page DI-170 , DI-179).**

NG → **Repair or replace.**

OK

6	**Check for spark and ignition (See page IG-1).**

NG → **Repair or replace.**

OK

Check and replace ECU (See page IN-28).

DI4SZ-01

DTC	P0300	Random/Multiple Cylinder Misfire Detected

DTC	P0301	Cylinder 1 Misfire Detected

DTC	P0302	Cylinder 2 Misfire Detected

DTC	P0303	Cylinder 3 Misfire Detected

DTC	P0304	Cylinder 4 Misfire Detected

DTC	P0305	Cylinder 5 Misfire Detected

DTC	P0306	Cylinder 6 Misfire Detected

CIRCUIT DESCRIPTION

Misfire: The ECM uses the crankshaft position sensor and camshaft position sensor to monitor changes in the crankshaft rotation for each cylinder.

The ECM counts the number of times the engine speed change rate indicates that misfire has occurred. When the misfire rate equals or exceeds the count indicating that the engine condition has deteriorated, the MIL lights up.

If the misfire rate is high enough and the driving conditions will cause catalyst overheating, the MIL blinks when misfiring occurs.

DTC No.	DTC Detecting Condition	Trouble Area
P0300	Misfiring of random cylinders is detected during the any particular 200 or 1,000 revolutions	• Ignition system • Injector • Fuel line pressure • EGR • Compression pressure • Valve clearance not to specification • Valve timing • Mass air flow meter • Engine coolant temp. sensor
P0301 P0302 P0303 P0304 P0305 P0306	For any particular 200 revolutions of the engine, misfiring is detected which can cause catalyst overheating (This causes MIL to blink)	
	For any particular 1,000 revolutions of the engine, misfiring is detected which causes a deterioration in emission (2 trip detection logic)	

HINT:

When the 2 or more codes for a misfiring cylinder are recorded repeatedly but no Random Misfire code is recorded, it indicates that the misfires were detected and recorded at different times.

WIRING DIAGRAM

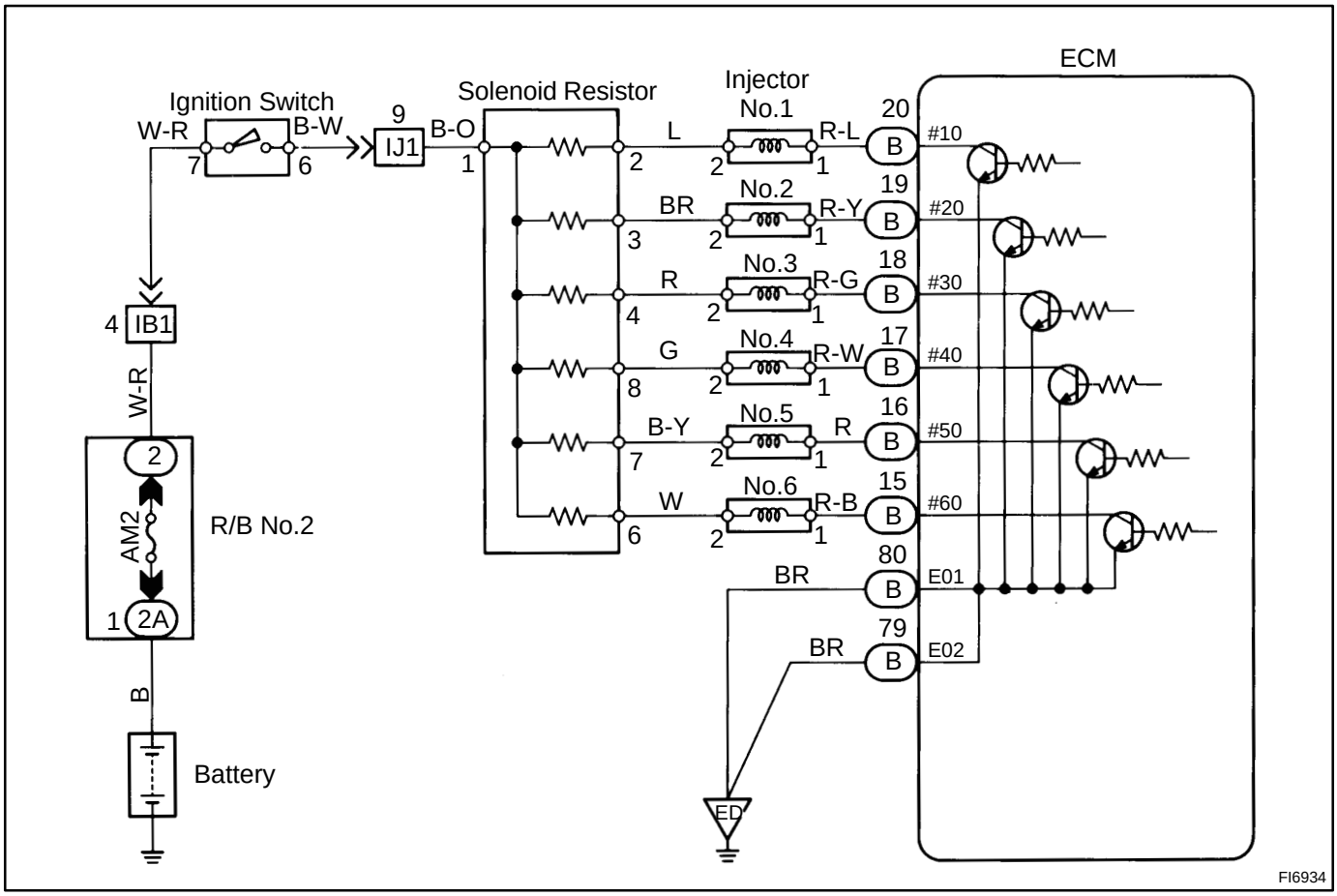

Reference INSPECTION USING OSCILLOSCOPE

INJECTOR SIGNAL WAVEFORM

With the engine idling, measure between terminals #10 - #60 and E01 of ECM.

HINT:

The correct waveform is as shown.

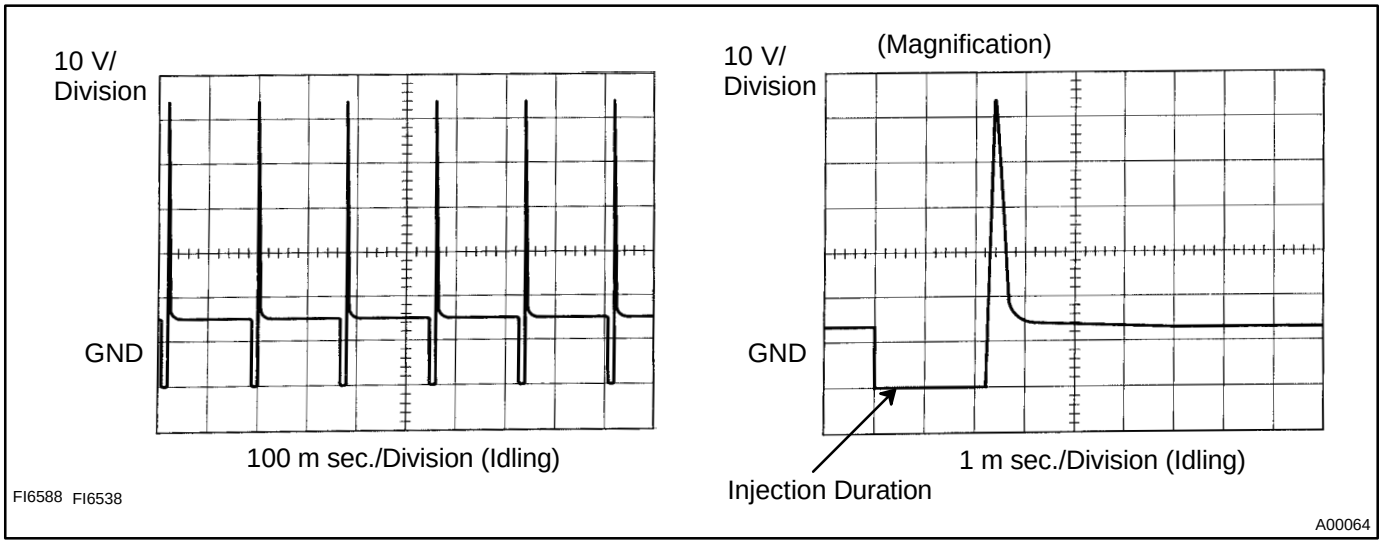

INSPECTION PROCEDURE

1	**Check spark plug and spark of misfiring cylinder.**

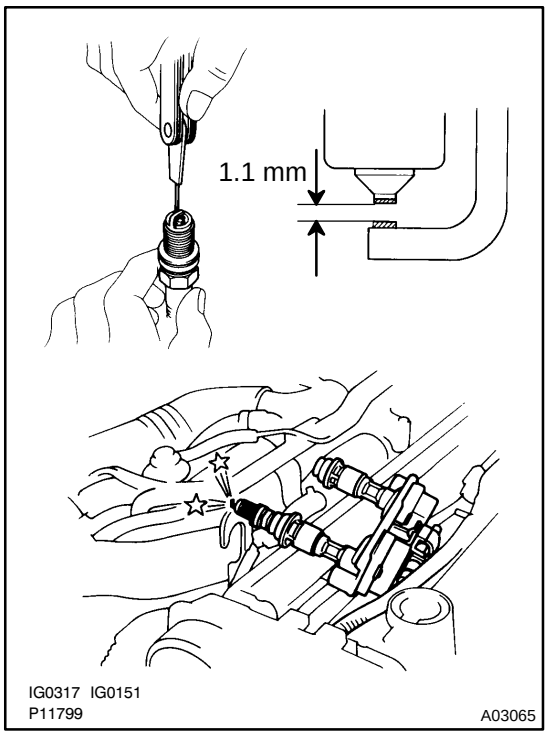

PREPARATION:

(a) Remove the ignition coil (See page IG-6).

(b) Remove the spark plug.

CHECK:

(a) Check the carbon deposits on electrode.

(b) Check electrode gap.

OK:

(1) No large carbon deposit present.
Not wet with gasoline or oil.
(2) Electrode gap: 1.1 - 1.3 mm
(0.043 - 0.051 in.)

PREPARATION:

(a) Install the spark plug to the ignition coil, and connect the ignition coil connector.

(b) Ground the spark plug.

(c) Disconnect injector connector.

CHECK:

Check if spark occurs while the engine is being cranked.

NOTICE:

To prevent excess fuel being injected from the injectors during this test, don't crank the engine for more than 5 - 10 sec. at a time.

OK:

Spark jumps across electrode gap.

NG → **Replace or check ignition system (See page IG-1).**

OK

2	Check voltage of ECM terminal for injector of failed cylinder.

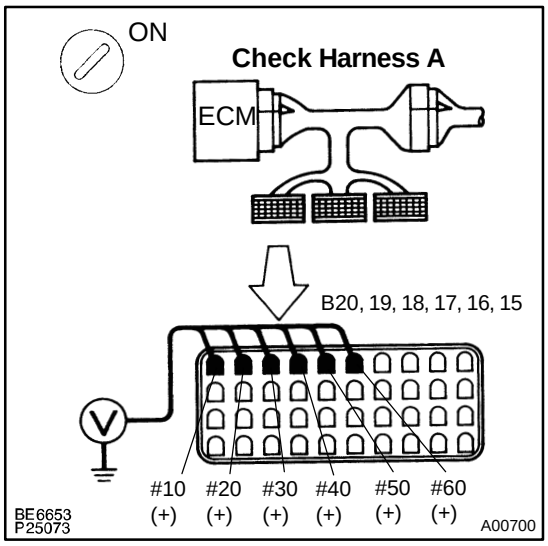

PREPARATION:

(a) Connect Check Harness A (See page DI-164 .).

(b) Turn ignition switch ON.

CHECK:

Measure voltage between applicable terminal of ECM and body ground.

OK:

Voltage: 9 - 14 V

OK → **Go to step 4.**

NG

3	Check resistance of injector of misfiring cylinder (See page SF-25).

NG → **Replace injector.**

OK

Check for open and short in harness and connector between injector and ECM (See page IN-28).

4	Check fuel pressure (See page SF-5).

NG → **Check and repair fuel pump, pressure regulator, fuel pipe line and filter (See page SF-1).**

OK

5	Check injector injection (See page SF-25).

NG → Replace injector.

OK

6	Check EGR system (See page EC-7).

NG → Repair EGR system.

OK

7	Check mass air flow meter and engine coolant temp. sensor (See page SF-38 , SF-73).

NG → Repair or replace.

OK

Check the compression pressure (See page EM-3), valve clearance (See page EM-4) and valve timing (See page EM-15).

DI4T0-01

DTC	P0325	Knock Sensor 1 Circuit Malfunction

DTC	P0330	Knock Sensor 2 Circuit Malfunction

CIRCUIT DESCRIPTION

Knock sensors are fitted one each to the front and rear of the left side of the cylinder block to detect engine knocking. This sensor contains a piezoelectric element which generates a voltage when it becomes deformed, which occurs when the cylinder block vibrates due to knocking. If engine knocking occurs, ignition timing is retarded to suppress it.

DTC No.	DTC Detecting Condition	Trouble Area
P0325	No knock sensor 1 signal to ECM with engine speed between 2,050 rpm and 5,950 rpm	• Open or short in knock sensor 1 circuit • Knock sensor 1 (looseness) • ECM
P0330	No knock sensor 2 signal to ECM with engine speed between 2,050 rpm and 5,950 rpm	• Open or short in knock sensor 2 circuit • Knock sensor 2 (looseness) • ECM

If the ECM detects the above diagnosis conditions, it operates the fail safe function in which the corrective retard angle value is set to the maximum value.

WIRING DIAGRAM

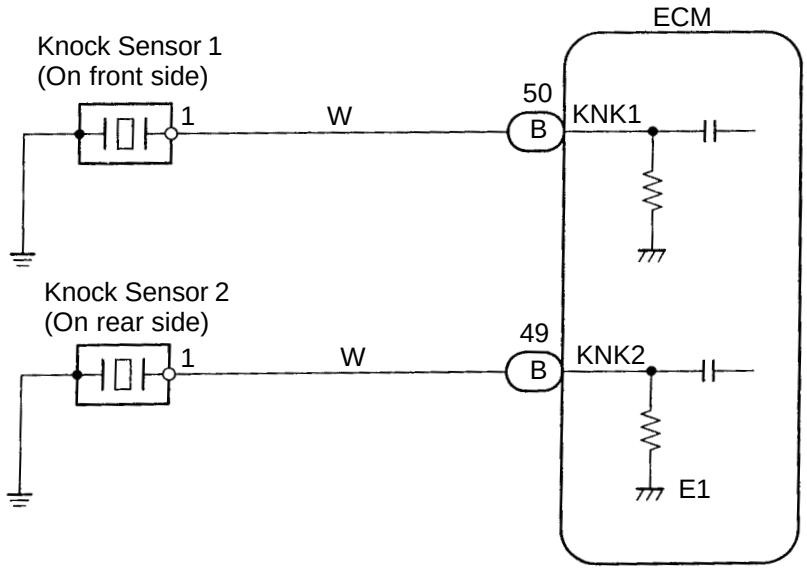

P22425

INSPECTION PROCEDURE

HINT:

- DTC P0325 is for the knock sensor circuit on the front side.
- DTC P0330 is for the knock sensor circuit on the rear side.

1	**Check continuity between terminal KNK1, KNK2 of ECM connector and body, ground.**

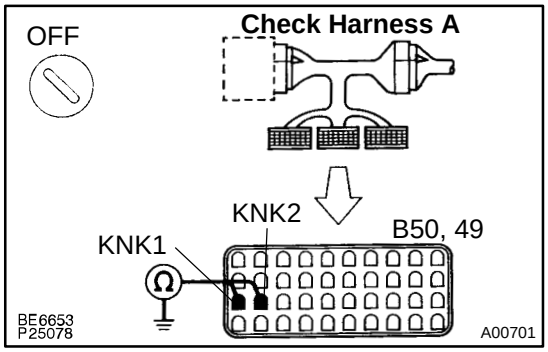

PREPARATION:

Connect Check Harness A to the connectors on the wire harness side (See page DI-164).

HINT:

The other side of Check Harness A is not connected to the ECM terminals.

CHECK:

Measure resistance between terminal KNK1, KNK2 of ECM connector and body ground.

HINT:

Connect terminal KNK1 to knock sensor 1.

Connect terminal KNK2 to knock sensor 2.

OK:

Resistance: 1 MΩ or higher

OK	**Go to step 3.**

NG

2	**Check knock sensor (See page SF-75).**

NG	**Replace knock sensor.**

OK

3	**Check for open and short in harness and connector between ECM and knock sensor (See page IN-28).**

NG	**Repair or replace harness or connector.**

OK

4	**Does malfunction disappear when a good knock senor is installed?**

YES → **Replace knock sensor.**

NO

Check and replace ECM (See page IN-28).

Reference INSPECTION USING OSCILLOSCOPE

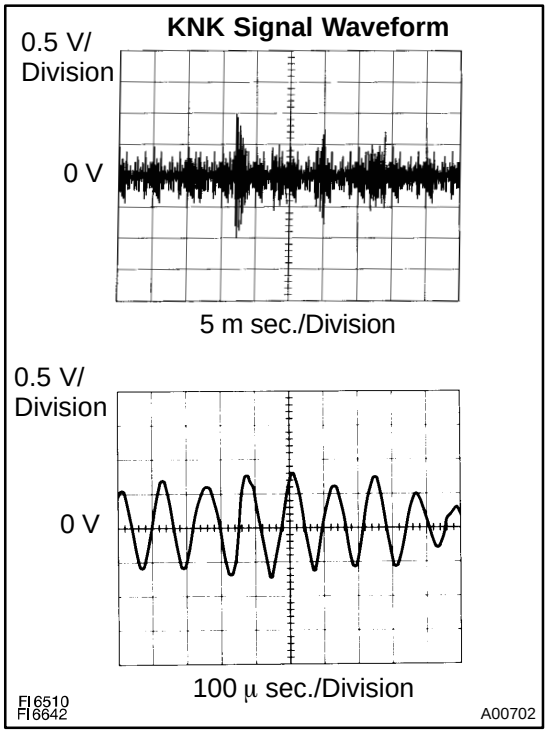

- With the engine racing (4,000 rpm) measure waveform between terminals KNK1, KNK2 of ECM and body ground.

HINT:
The correct waveform is as shown.

- Spread the time on the horizontal axis, and confirm that period of the wave is 123 ¿ sec. (Normal, mode vibration frequency of knock sensor: 8.1 KHz).

HINT:
If normal mode vibration frequency is not 8.1 KHz, the sensor is malfunctioning.

DI4T1-01

DTC	P0335	Crankshaft Position Sensor ”A” Circuit Malfunction

CIRCUIT DESCRIPTION

The crankshaft position sensor (NE signal) consist of a signal plate and a pick up coil. The NE plate has 24 teeth and is mounted on the crankshaft.
When the camshaft rotates, the protrusion on the signal plate and the air gap on the pick up coil change, causing fluctuations in the magnetic field and generating an electromotive force in the pick up coil.
The NE signal sensor generates 24 signals for every engine revolution. The ECM detects the standard crankshaft angle based on the G1, G2 signals, detects the actual crankshaft angle and the engine speed by the NE signals.

DTC No.	DTC Detecting Condition	Trouble Area
P0335	No crankshaft position sensor signal (NE signal) to ECM during cranking (2 trip detection logic)	• Open or short in crankshaft position sensor circuit for NE signal • Crankshaft position sensor for NE signal • Starter • ECM
	No crankshaft position sensor signal (NE signal) to ECM with engine speed 600 rpm or more (2 trip detection logic)	

WIRING DIAGRAM

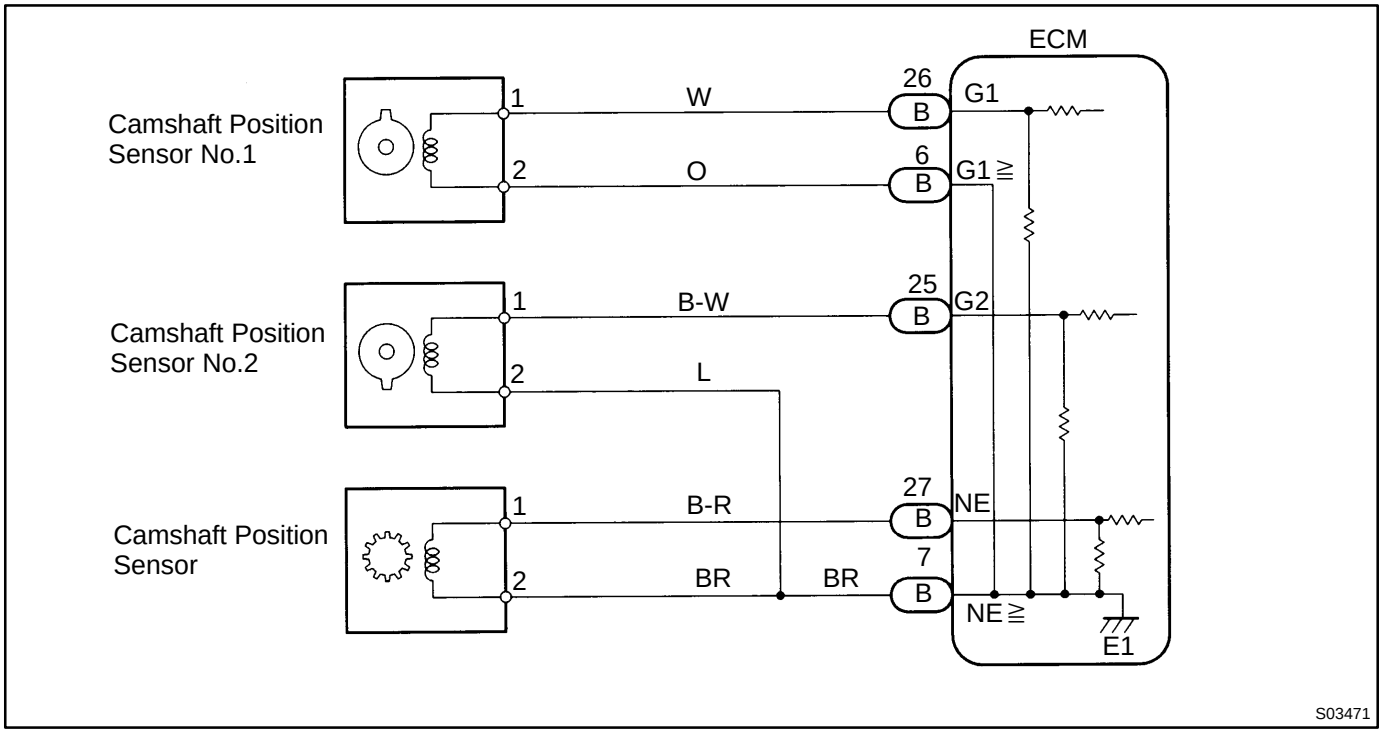

INSPECTION PROCEDURE

1	**Check resistance of crankshaft position sensor for NE signal.**

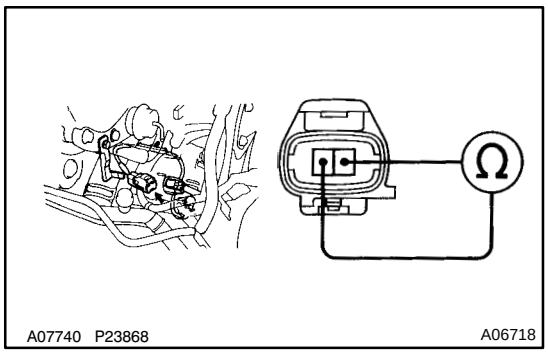

PREPARATION:
Disconnect crankshaft position sensor connector.
CHECK:
Measure resistance of crankshaft position sensor.
OK:

	Resistance
Cold	835 ~ 1,400 Ω
Hot	1,060 ~ 1,645 Ω

"Cold" is from -10˚C (14˚F) to 50˚C (122˚F) and "Hot" is from 50˚C (122˚F) to 100˚C (212˚F).

Reference INSPECTION USING OSCILLOSCOPE

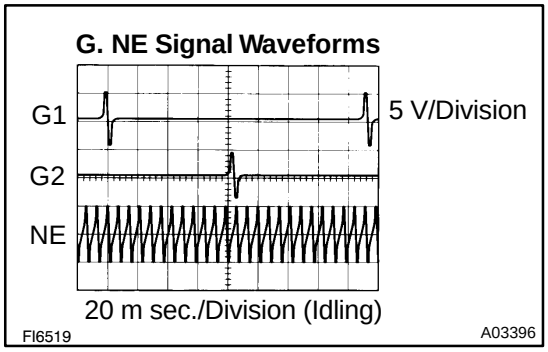

- During cranking or idling, check between ECM terminals G1, G2 and G1≧, NE and NE≧of engine control module.

HINT:
The correct waveforms are as shown.

NG → **Replace distributor.**

OK

2	**Check for open and short in harness and connector between ECM and crankshaft position sensor for NE signal (See page IN-28).**

NG → **Repair or replace harness or connector.**

OK

3	**Inspect sensor installation and teeth of signal plate.**

NG → **Tighten the sensor.**
Replace signal plate.

OK

Check and replace ECM (See page IN-28).

DTC	P0401	Exhaust Gas Recirculation Flow Insufficient Detected

CIRCUIT DESCRIPTION

The EGR system recirculates exhaust gas, which is controlled to the proper quantity to suit the driving conditions, into the intake air mixture to slow down combustion, reduce the combustion temperature and reduce NOx emissions. The amount of EGR is regulated by the EGR vacuum modulator according to the engine load.

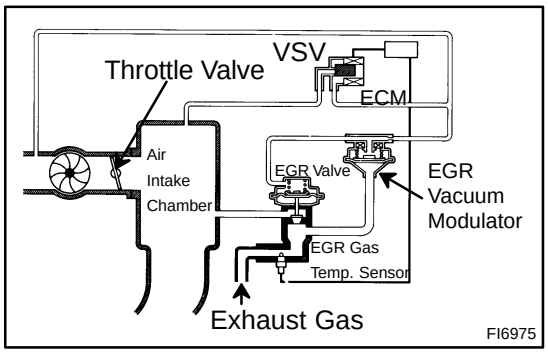

If even one of the following conditions is fulfilled, the VSV is turned ON by a signal from the ECM. This results in atmospheric air acting on the EGR valve, closing the EGR valve and shutting off the exhaust gas (EGR cut-off).
Under the following conditions, EGR is cut to maintain driveability.

- Before the engine is warmed up.
- During deceleration (throttle valve closed).
- Light engine load (amount of intake air very small).
- Engine racing.

DTC No.	DTC Detecting Condition	Trouble Area
P0401	After the engne is warmed up and run at 80 km/h (50 mph) for 3 to 5 min., the EGR gas temperature sensor value does not exceed 45˚C (113˚F) above the ambient air temperature (2 trip detection logic)	• EGR valve stuck closed • Short in VSV circuit for EGR • Open in EGR gas temp. sensor circuit • EGR hose disconnected • ECM

WIRING DIAGRAM

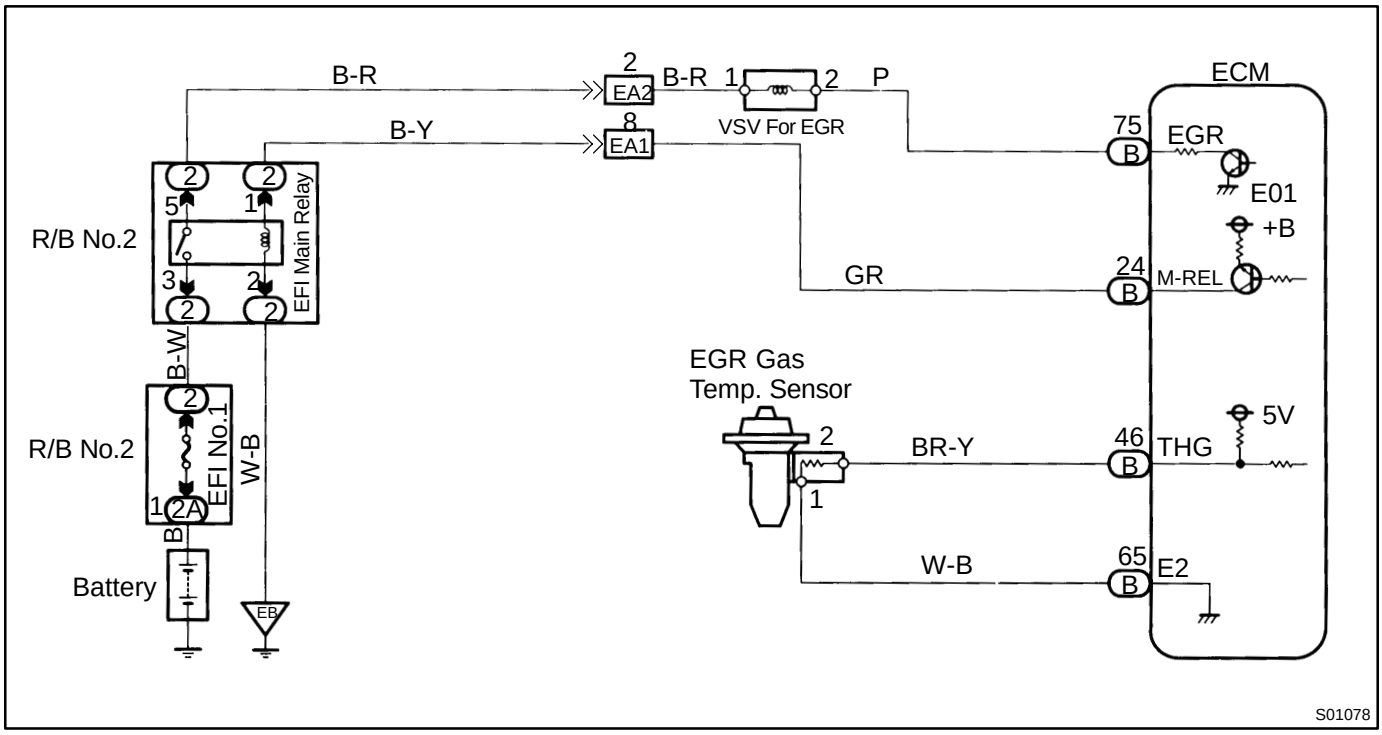

SYSTEM CHECK DRIVING PATTERN

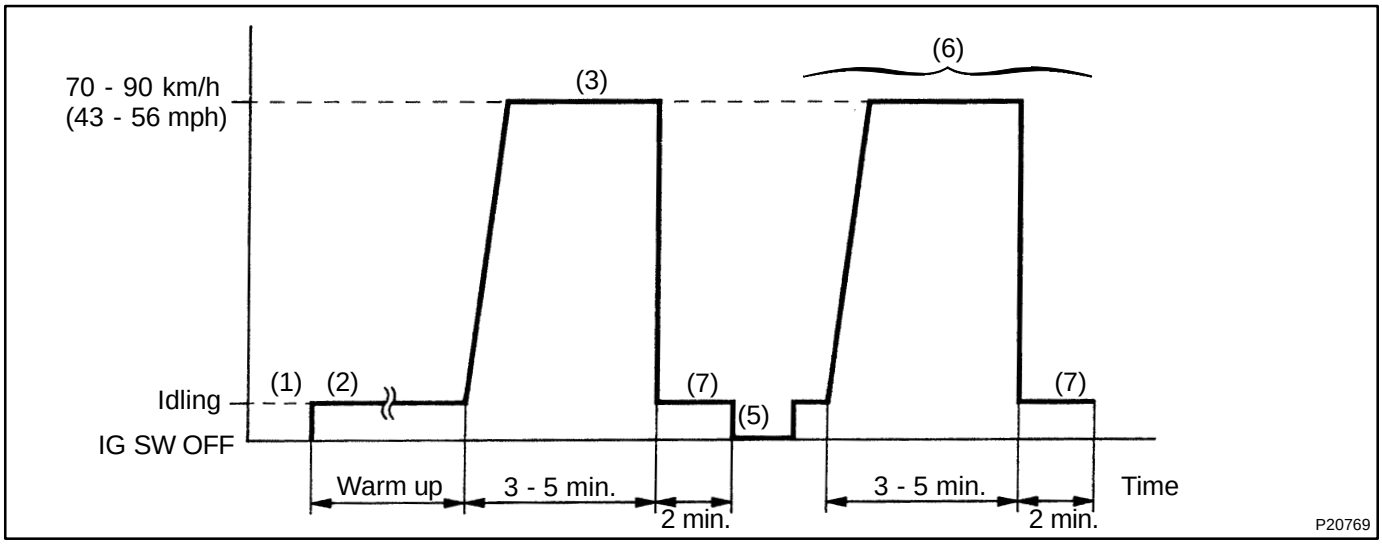

(1) Connect the OBDII scan tool or TOYOTA hand-held tester to the DLC3.
(2) Start the engine and warm it up with all accessories switched OFF.
(3) Run the vehicle at 70 - 90 km/h (43 - 56 mph) for 3 min. or more.
(4) Idle the engine for about 2 min.
(5) Stop at safe place and turn the ignition switch OFF.
(6) Start the engine and do steps (3) and (4) again.
(7) Check the "READINESS TESTS" mode on the OBDII scan tool or TOYOTA hand-held tester. If "COMPL" is displayed and the MIL does not light up, the system is normal. If "INCMPL" is displayed and the MIL does not light up, run the vehicle again and check it.

HINT:

"INCMPL" is displayed when either condition (a) or (b) exists.

- The system check is incomplete.
- There is a malfunction in the system.

If there is a malfunction in the system, the MIL will light up after steps (2) to (6) above are done.

INSPECTION PROCEDURE
TOYOTA hand-held tester

1	**Connect the TOYOTA hand-held tester and read value of EGR gas temperature.**

PREPARATION:

(a) Connect the TOYOTA hand-held tester to the DLC3.

(b) Turn ignition switch ON and TOYOTA hand-held tester main switch ON.

CHECK:

Read EGR gas temperature on the TOYOTA hand-held tester.

OK:

EGR gas temp.: 10˚C (50˚F) or more

HINT:

If there is an open circuit, the TOYOTA hand-held tester indicates 3.1˚C (37.6˚F).

OK → **Go to step 4.**

NG

2	**Check for open in harness or ECM.**

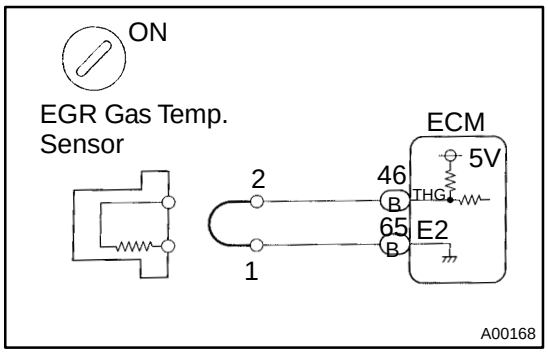

PREPARATION:

(a) Disconnect the EGR gas temp. sensor connector.

(b) Connect sensor wire harness terminals together.

(c) Turn ignition switch ON.

CHECK:

Read EGR gas temperature on the TOYOTA hand-held tester.

OK:

EGR gas temp.: 159.3˚C (318.7˚F)

OK → **Confirm good connection at sensor. If OK, replace EGR gas temp. sensor.**

NG

3	Check for open in harness or ECM.

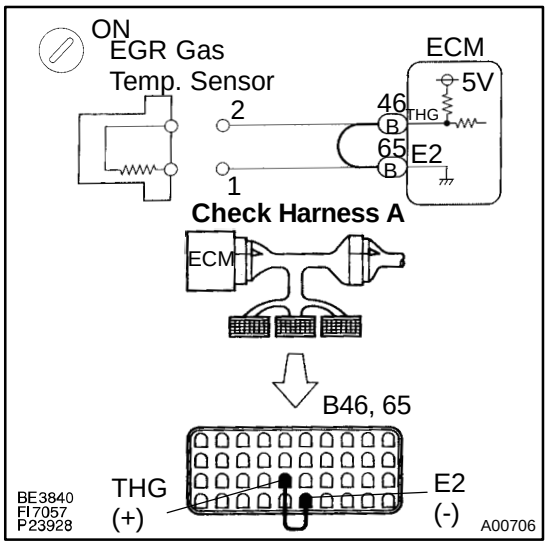

PREPARATION:

(a) Connect Check Harness A (See page DI-164).

(b) Connect between terminals THG and E2 of ECM.

HINT:

EGR gas temp. sensor connector is disconnected. Before checking, do a visual check and connect pressure check for the ECM connector (See page IN-28).

CHECK:

Read EGR gas temperature on the TOYOTA hand-held tester.

OK:

EGR gas temp.: 159.3˚C (318.7˚F)

OK	Open in harness between terminals E2 or THG. Repair or replace harness.

NG

Confirm connection at ECM.
If OK, replace ECM.

4	Check connection of vacuum hose, EGR hose (See page EC-2).

NG	Repair or replace.

OK

5	Check EGR system (See page EC-7).

OK	Check and replace ECM (See page IN-28).

NG

6	Check the VSV for EGR.

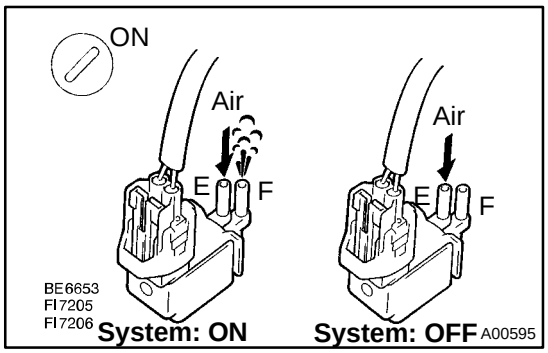

PREPARATION:
Select the ACTIVE TEST mode on the TOYOTA hand-held tester.

CHECK:
Check operation of VSV when it is operated by the TOYOTA hand-held tester.

OK:

EGR system is ON:
Air from pipe E flows out through pipe F.
EGR system is OFF:
Air does not flow from pipe E to pipe F.

OK → **Go to step 8.**

NG

7	Check operation of the VSV for EGR (See page SF-69).

NG → **Replace VSV for EGR.**

OK

Check for open in harness and connector between VSV and ECM (See page IN-28).

8	Check EGR vacuum modulator (See page EC-7).

NG → **Repair or replace.**

OK

9	**Check EGR valve (See page EC-7).**

NG → **Repair or replace.**

OK

10	**Check value of EGR gas temp. sensor.**

PREPARATION:

(a) Connect the TOYOTA hand-held tester to the DLC3.
(b) Turn ignition switch ON and push the TOYOTA hand-held tester main switch ON.
(c) Select the ACTIVE TEST mode on the TOYOTA hand-held tester. (EGR system ON)
(d) Race the engine at 4,000 rpm for 3 min.

CHECK:

Measure the EGR gas temp. while racing engine at 4,000 rpm.

OK:

EGR gas temp. after 3 min.: 120˚C (248˚F) or more

NG → **Replace EGR gas temp. sensor.**

OK

Check and replace ECM (See page IN-28).

OBDII scan tool (excluding TOYOTA hand-held tester)

1	Check resistance of EGR gas temp. sensor.

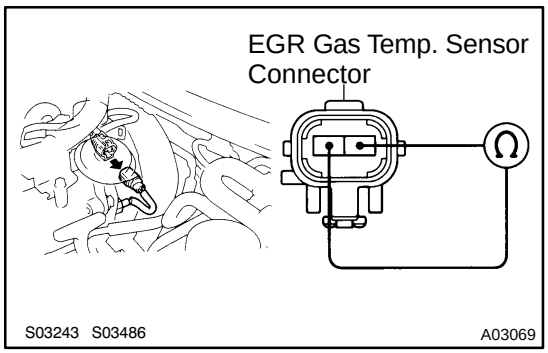

PREPARATION:
Disconnect EGR gas temp. sensor connector.
CHECK:
Measure resistance between terminals of EGR gas temp. sensor connector.
OK:

Resistance: 600 kΩ or less.

HINT:
If there is open circuit, ohmmeter indicates 720 kΩ or more.

NG → **Check and replace EGR gas temp. sensor (See page SF-77).**

OK

2	Check for open in harness or ECM.

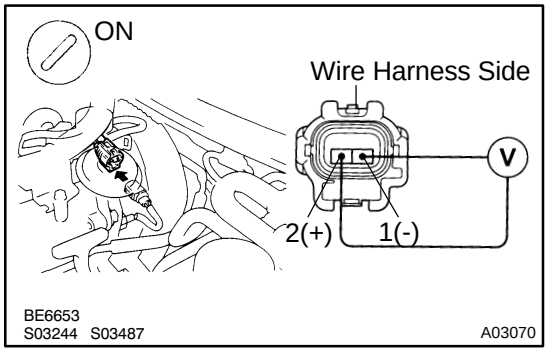

PREPARATION:
(a) Disconnect EGR gas temp. sensor connector.
(b) Turn ignition switch ON.
CHECK:
Measure voltage between terminals of EGR gas temp. sensor wire harness side connector.
OK:

Voltage: 4.5 - 5.5 V

OK → **Go to step 4.**

NG

3	Check for open in harness or ECM.

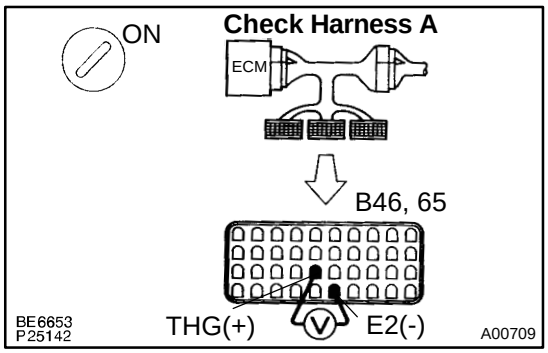

PREPARATION:

(a) Connect Check Harness A (See page DI-164).

(b) Turn ignition switch ON.

CHECK:

Measure voltage between terminals THG and E2 of ECM connector.

HINT:

EGR gas temp. sensor connector is disconnected.

OK:

Voltage: 4.5 - 5.5 V

OK	Open in harness between terminal E2 or THG. repair or replace harness.

NG

Confirm connection at ECM.
If OK, replace ECM.

4	Check connection of vacuum hose, EGR hose (See page EC-2).

NG	Repair or replace.

OK

5	Check EGR system (See page EC-7).

OK	Check and replace ECM (See page IN-28).

NG

6	Check the VSV for EGR.

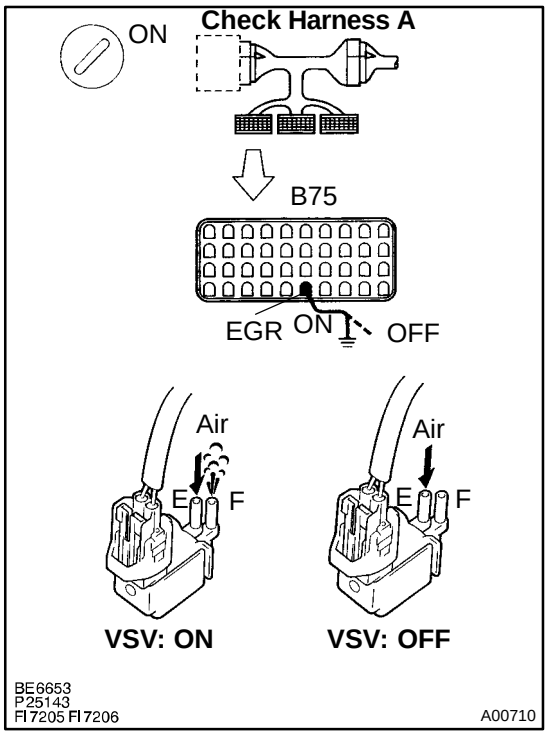

PREPARATION:

(a) Connect Check Harness A to the connectors on the wire harness side (See page DI-164).

HINT:

The other side of Check Harness A is not connected to the ECM terminals.

(b) Turn ignition switch ON.

CHECK:

Check VSV function

(1) Connect between terminal EGR of ECM connector and body ground (ON).

(2) Disconnect between terminal EGR of ECM connector and body ground (OFF).

OK:

(1) VSV is ON:
Air from pipe E flows out through pipe F.
(2) VSV is OFF:
Air does not flow from pipe E to pipe F.

OK	Go to step 8.

NG

7	Check operation of the VSV for EGR (See page SF-77).

NG	Replace VSV for EGR.

OK

Check for open in harness and connector between engine room R/B and ECM (See page IN-28).

8	**Check EGR vacuum modulator (See page EC-7).**

NG → **Repair or replace.**

OK

9	**Check EGR valve (See page EC-7).**

NG → **Repair or replace.**

OK

10	**Check resistance of EGR gas temp. sensor.**

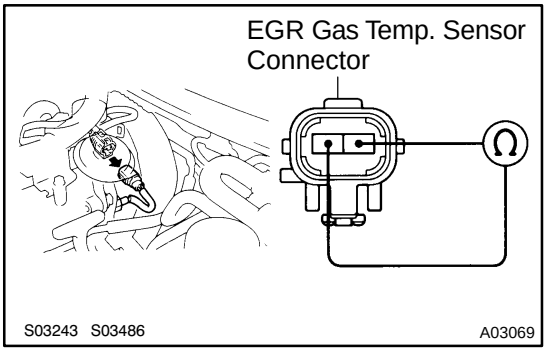

PREPARATION:

(a) Disconnect EGR gas temp. sensor connector.
(b) For EGR system is ON, connect between terminal EGR of ECM connector and body ground
(See page DI-217 , step 5).
(c) Start the engine and warm it up.
(d) Race the engine at 4,000 rpm for 3 min.

CHECK:

Measure the resistance of the EGR gas temp. sensor while racing the engine at 4,000 rpm.

OK:

Resistance of EGR gas temp. senor after 3 min. 9.0 kΩ or less

HINT:

Resistance: 188.6 - 439.0 kΩ at 20˚C (68˚F).

NG → **Replace EGR gas temp. sensor.**

OK

Check and replace ECM (See page IN-28).

DI4T4-01

DTC	P0402	Exhaust Gas Recirculation Flow Excessive Detected

CIRCUIT DESCRIPTION

Refer To Exhaust Gas Recirculation Flow Insufficient Detected on page DI-217 .

DTC No.	DTC Detecting Condition	Trouble Area
P0402	EGR gas temp. sensor value is high during EGR cut-off when engine is cold (Race engine at about 4,000 rpm without load so that vacuum is applied to port E) (2 trip detection logic)	• EGR valve stuck open • EGR VSV open malfunction • Open in VSV circuit for EGR • Short in EGR gas temp. sensor circuit • ECM
	EGR valve is always open (2 trip detection logic)	

See DTC P0401 for CONFIRMATION CHECK DRIVING PATTERN and WIRING DIAGRAM.

INSPECTION PROCEDURE

TOYOTA hand-held tester

1	**Connect the TOYOTA hand-held tester and read EGR gas temperature value.**

PREPARATION:

(a) Connect the TOYOTA hand-held tester to the DLC3.

(b) Turn ignition switch ON and push the TOYOTA hand-held tester main switch ON.

CHECK:

Read EGR gas temperature on the TOYOTA hand-held tester.

OK:

EGR gas temp.: 150˚C (302˚F) or less. (Not immediately after driving)

HINT:

If there is a short circuit, the TOYOTA hand-held tester indicates 159.3˚C (318.7˚F).

OK → **Go to step 4.**

NG

2	Check for short in harness and ECM.

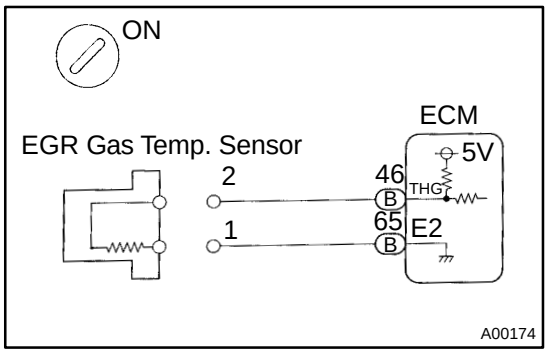

PREPARATION:
Disconnect the EGR gas temp. sensor connector.
CHECK:
Read EGR gas temp. on the TOYOTA hand-held tester.
OK:
EGR gas temp.: 3.1˚C (37.6˚F)

OK	Replace EGR gas temp. sensor.

NG

3	Check for short in harness or ECM.

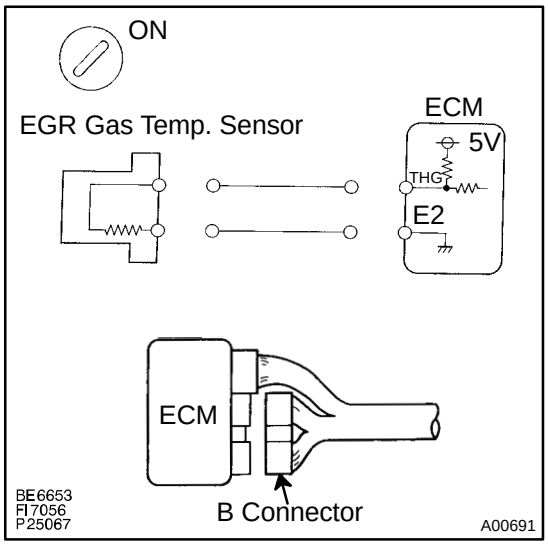

PREPARATION:
(a) Disconnect the B connector from ECM (See page DI-164).
HINT:
EGR gas temp. sensor is disconnected.
(b) Turn ignition switch ON.
CHECK:
Read EGR gas temp. on the TOYOTA hand-held tester.
OK:
EGR gas temp.: 3.1˚C (37.6˚F)

OK	Repair or replace harness or connector.

NG

Check and replace ECM (See page IN-28).

4	Check the VSV for EGR (See page DI-217 , step 6).

OK → Check EGR valve (See page EC-7).

NG

5	Check operation of the VSV for EGR (See page SF-77).

NG → Replace VSV for EGR.

OK

Check for short in harness and connector between VSV and ECM (See page IN-28).

OBDII scan tool (excluding TOYOTA hand-held tester)

1	Check resistance of EGR gas temp. sensor.

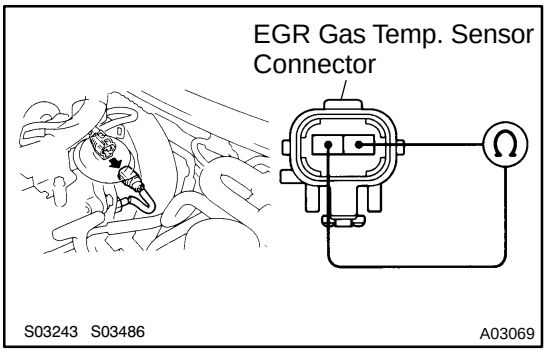

PREPARATION:
Disconnect the EGR gas temp. sensor connector.
CHECK:
Measure resistance between terminals of EGR gas temp. sensor connector.
OK:

Resistance: 2.5 kΩ or more.
(Not immediately after driving)

HINT:
If there is short circuit, ohmmeter indicates 200 Ω or less.

NG → Replace EGR gas temp. sensor.

OK

2	Check for short in harness and connector between EGR gas temp. sensor and ECM (See page EC-7).

NG → Repair or replace harness or connector.

OK ↓

3	Check the VSV for EGR (See page DI-217 , step 6).

OK → Check EGR valve (See page EC-7).

NG ↓

4	Check operation of the VSV for EGR (See page IN-18).

NG → Replace VSV for EGR.

OK ↓

5	Check for short in harness and connector between VSV and ECM (See page EC-7).

NG → Repair or replace harness or connector.

OK ↓

Check and replace ECM (See page EC-7).

DI4T5-01

DTC	P0420	Catalyst System Efficiency Below Threshold

CIRCUIT DESCRIPTION

The ECM compares the waveform of the oxygen sensor located before the catalyst with the waveform of the oxygen sensor located after the catalyst to determine whether or not catalyst performance has deteriorated.

Air-fuel ratio feedback compensation keeps the waveform of the oxygen sensor before the catalyst repeatedly changing back and forth from rich to lean.

If the catalyst is functioning normally, the waveform of the oxygen sensor after the catalyst switches back and forth between rich and lean much more slowly than the waveform of the oxygen sensor before the catalyst.

But when both wavaforms change at a similar rate, it indicates that catalyst performance has deteriorated.

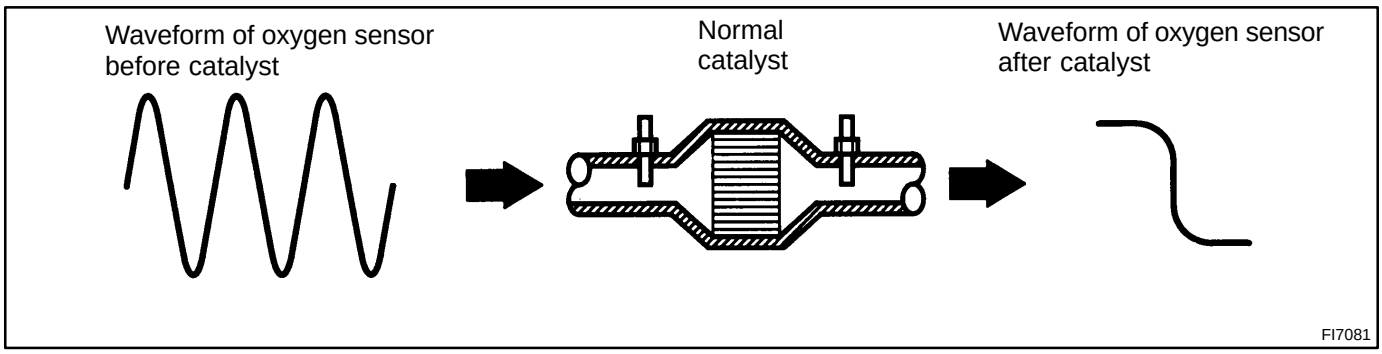

DTC No.	DTC Detecting Condition	Trouble Area
P0420	After the engine and the catalyst are warmed up, and while the vehicle is driven within the set vehicle and engine speed range, the waveforms of the heated oxygen sensors (bank 1 sensor 1 and bank 1 sensor 2) have the same amplitude (2 trip detection logic)	• Three-way catalytic converter • Open or short in heated oxygen sensor circuit • Heated oxygen sensor

CONFIRMATION ENGINE RACING PATTERN

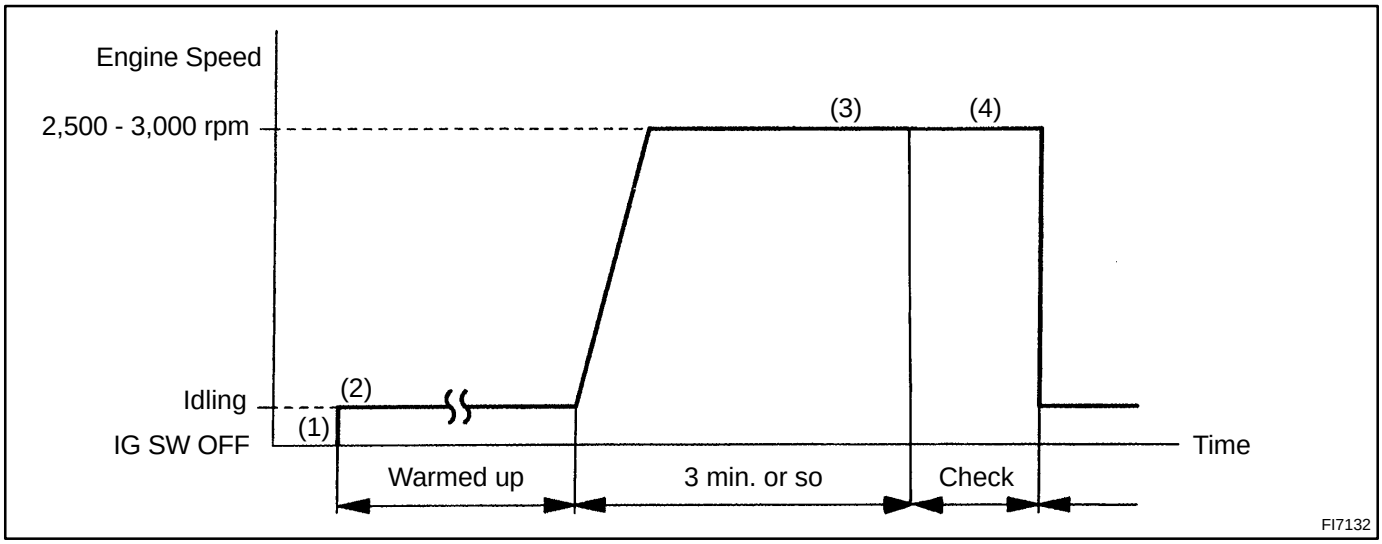

(1) Connect the TOYOTA hand-held tester to the DLC3, or connect the probe of the oscilloscope between terminals OX1, OX2, and E1 of ECM.
(2) Start engine and warm it up with all accessories switched OFF until water temperature is stable.
(3) Race the engine at 2,500 ~ 3,000 rpm for about 3 min.
(4) After confirming that the waveforms of the heated oxygen sensors, bank 1 sensor 1 (OX1), oscillate around 0.5 V during feedback to the ECM, check the waveform of the heated oxygen senor, bank 1 sensor 2 (OX2).

OX Signal Waveform (Oscilloscope)

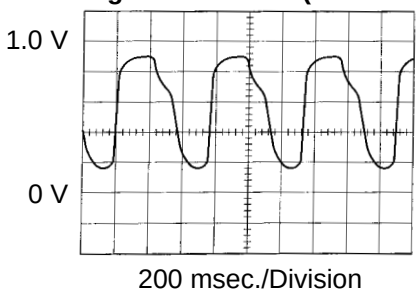

HINT:
If there is a malfunction in the system, the waveform of the heated oxygen senor, bank1 sensor 2 (OX2), is almost the same as that of the heated oxygen sensors, bank 1 senor 1 (OX1), on the left.
There are some cases where, even though a malfunction exists, the MIL may either light up or not light up.

INSPECTION PROCEDURE

1	Are there any other code (besides DTC P0420) being output?

YES → Go to relevant DTC chart.

NO

2	Check heated oxygen senor (bank 1, sensor 1) (See page DI-193).

NG → Repair or replace.

OK

3	Check heated oxygen senor (bank1, sensor 2) (See page DI-199).

NG → Repair or replace.

OK

Replace three-way catalytic converter.

DI4T6-01

DTC	P0441	Evaporative Emission Control System Incorrect Purge Flow

CIRCUIT DESCRIPTION

To reduce HC emissions, evaporated fuel from the fuel tank is routed through the charcoal canister to the intake manifold for combustion in the cylinders.

The ECM changes the duty signal to the VSV for EVAP so that the intake quantity of HC emissions is appropriate for the driving conditions (engine load, engine speed, etc.) after the engine is warme up.

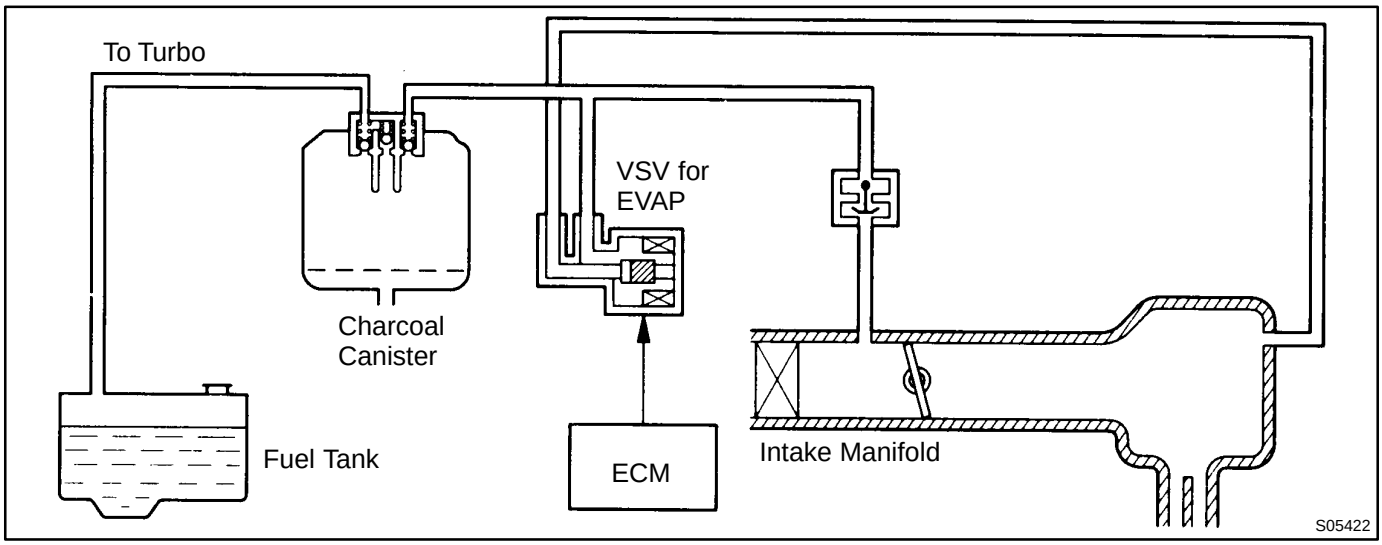

DTC No.	DTC Detecting Condition	Trouble Area
P0441	The proper response to the computer command does not occur (2 trip detection logic)	• Open or short in VSV circuit for EVAP • VSV for EVAP • Vacuum hose blocked or disconnected • ECM • Charcoal canister

WIRING DIAGRAM

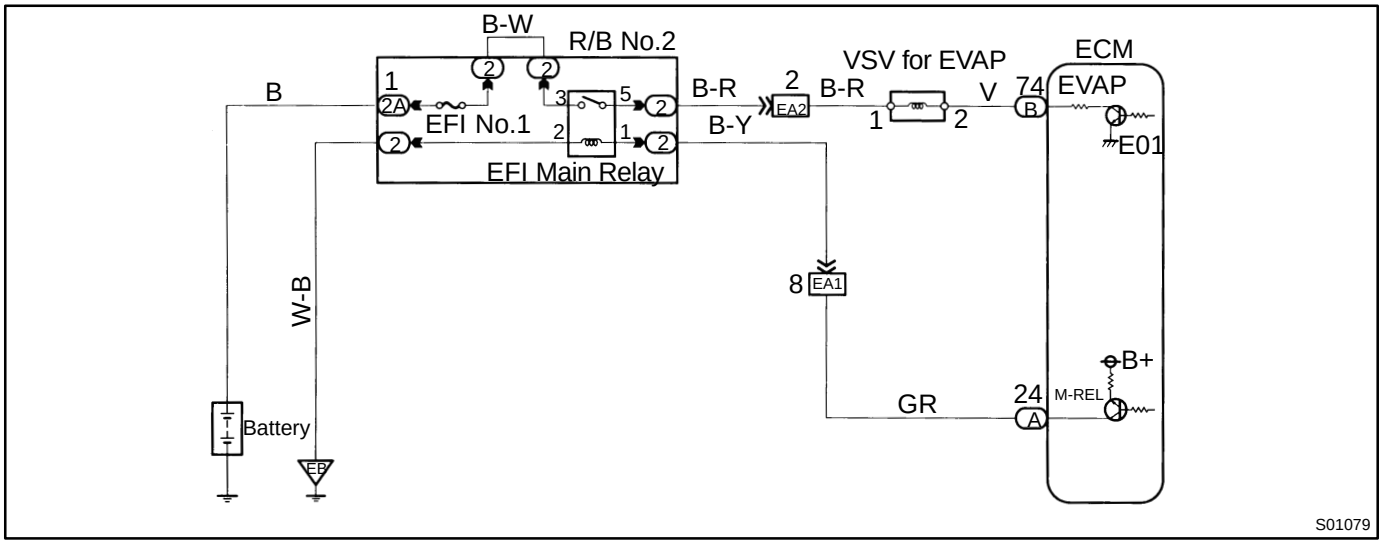

INSPECTION PROCEDURE
TOYOTA hand-held tester

1	**Connect the TOYOTA hand-held tester and check operation of VSV for EVAP.**

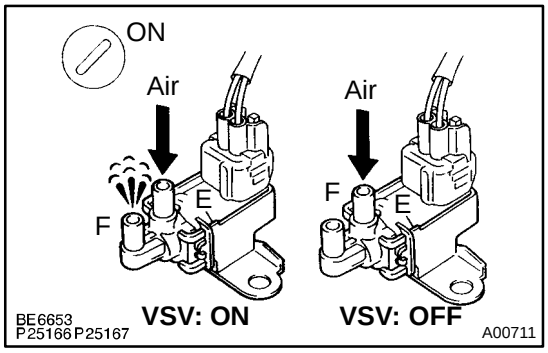

PREPARATION:

(a) Connect the TOYOTA hand-held tester to the DLC3.
(b) Turn ignition switch ON and push the TOYOTA hand-held tester main switch ON.
(c) Select the ACTIVE TEST mode on the TOYOTA hand-held tester.

CHECK:

Check operation of VSV when VSV is operated by the TOYOTA hand-held tester.

OK:

VSV is ON:
Air from pipe E flows out through pipe F.
VSV is OFF:
Air does not flow from pipe E to pipe F.

OK	**Go to step 4.**

NG

2	**Check VSV for EVAP (See page SF-71).**

NG	**Replace VSV for EVAP.**

OK

3	**Check for open and short in harness and connector between EFI main relay (Marking: EFI MAIN) and ECM (See page IN-28).**

NG	**Repair or replace harness or connector.**

OK

Check and replace ECM (See page IN-28).

4	Check connection of vacuum hose (See page EC-5).

NG → Repair or replace.

OK

Check and repair charcoal canister (See page EC-5).

OBDII scan tool (excluding TOYOTA hand-held tester)

1	Check VSV for EVAP (See page SF-71).

NG → Replace VSV for EVAP.

OK

2	Check voltage between terminal EVAP of ECM connector and body ground.

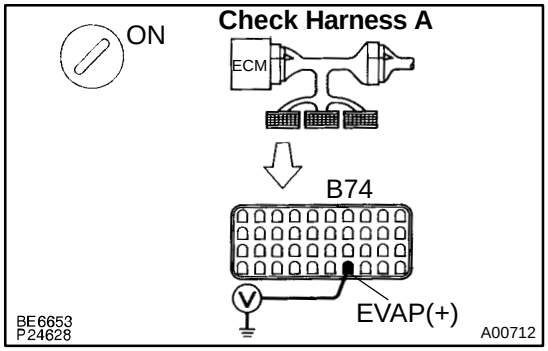

PREPARATION:

(a) Connect Check Harness A (See page DI-164).

(b) Turn ignition switch ON.

CHECK:

Measure voltage between terminal EVAP of ECM connector and body ground.

OK:

Voltage: 9 - 14 V

NG → Check and repair harness or connector.

OK

3	Check connection of vacuum hose (See page EC-5).

NG → Repair or replace.

OK

4	Check charcoal canister (See page EC-5).

NG → Repair or replace.

OK

Check and replace ECM (See page IN-28).

DI4T7-01

DTC	P0500	Vehicle Speed Sensor Malfunction

CIRCUIT DESCRIPTION

The No.1 vehicle speed senor outputs a 4-pulse signal for every revolution of the rotor shaft, which is rotated by the transmission output shaft via the driven gear. After this signal is converted into a more precise rectangular waveform by the waveform shaping circuit inside the combination meter, it is then transmitted to the ECM. The ECM determines the vehicle speed based on the frequency of these pulse signals.

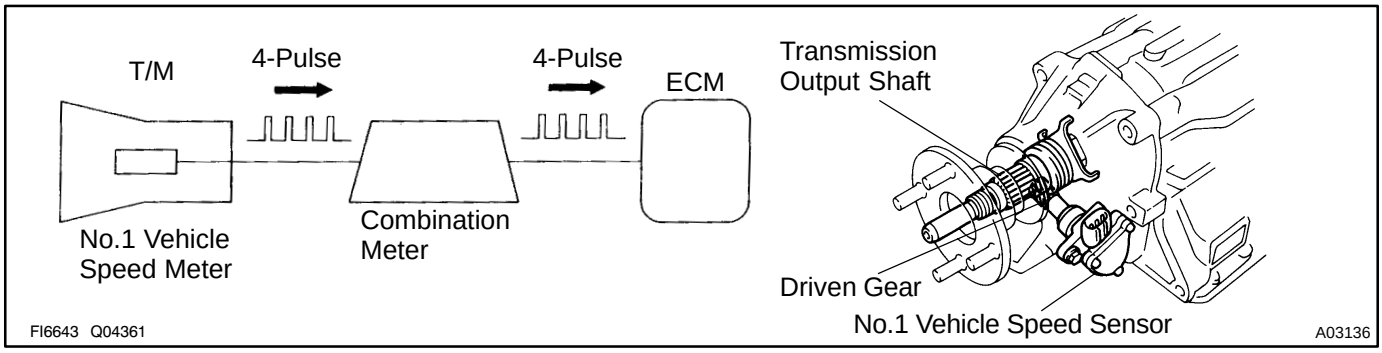

DTC No.	DTC Detecting Condition	Trouble Area
P0500	No vehicle speed sensor signal to ECM under the following conditions: (2 trip detection logic) (a) Park/neutral position switch is OFF (b) Vehicle is being driven	• Open or short in vehicle speed sensor circuit • Vehicle speed sensor • Combination meter • ECM

WIRING DIAGRAM

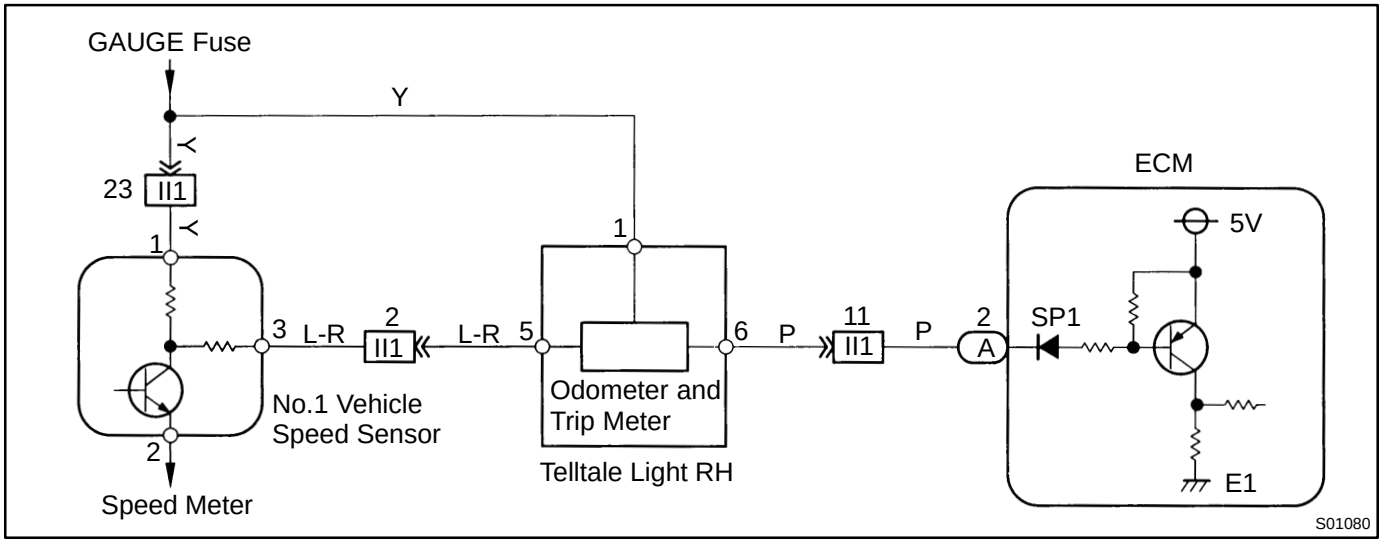

INSPECTION PROCEDURE

1	**Check operation of speedometer.**

CHECK:

Drive the vehicle and check if the operation of the speedometer in the combination meter is normal.

HINT:

The No.1 vehicle speed sensor is operating normally if the speedometer display is normal.

NG → **Check speedometer circuit (See page BE-43).**

OK

2	**Check voltage between terminal SP1 of ECM connector and body ground.**

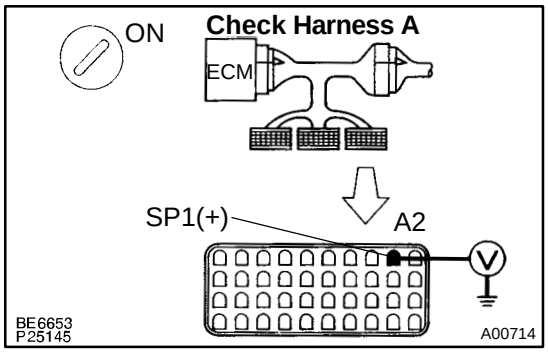

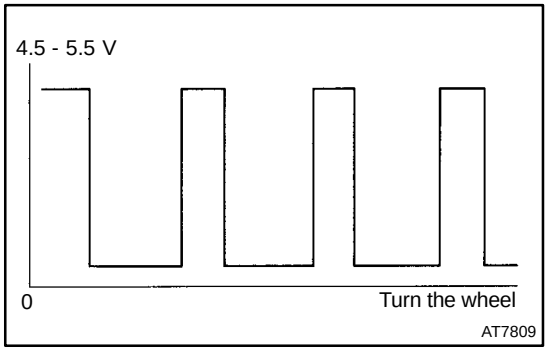

PREPARATION:

(a) Shift the shift lever to neutral position.
(b) Jack up one of rear wheels.
(c) Connect Check Harness A (See page DI-164).
(d) Disconnect power steering ECU connector and cruise control ECU connector.
(e) Turn ignition switch ON.

CHECK:

Measure voltage between terminal SP1 of ECM connector and body ground when rear wheel is turned slowly.

OK:

Voltage is generated intermittently.

NG → **Check and repair harness and connector between combination meter and ECM.**

OK

Check and replace ECM (See page IN-28).

DI4T8-01

DTC	P0505	Idle Control System Malfunction

CIRCUIT DESCRIPTION

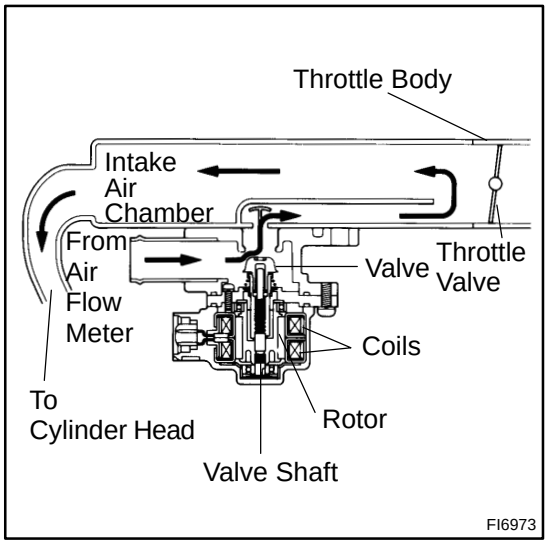

The step motor type IAC valve is located in front of the intake air chamber. Intake air bypassing the throttle valve is directed to the IAC valve through a passage. A step motor is built into the IAC valve. It consists of 4 coils, a magnetic rotor, valve shaft and valve.

When current flows to the coils due to signals from the ECM, the rotor turns and moves the valve shaft forward or backward, changing the clearance between the valve and the valve seat. In this way the intake air volume bypassing the throttle valve is regulated, controlling the engine speed.

There are 125 possible positions to which the valve can be opened.

DTC No.	DTC Detecting Condition	Trouble Area
P0505	Idle speed continues to vary greatly from the target speed (2 trip detection logic)	• IAC valve is stuck or closed • Open or short in IAC valve circuit • Open or short in A/C signal circuit • Air intake (hose loose)

WIRING DIAGRAM

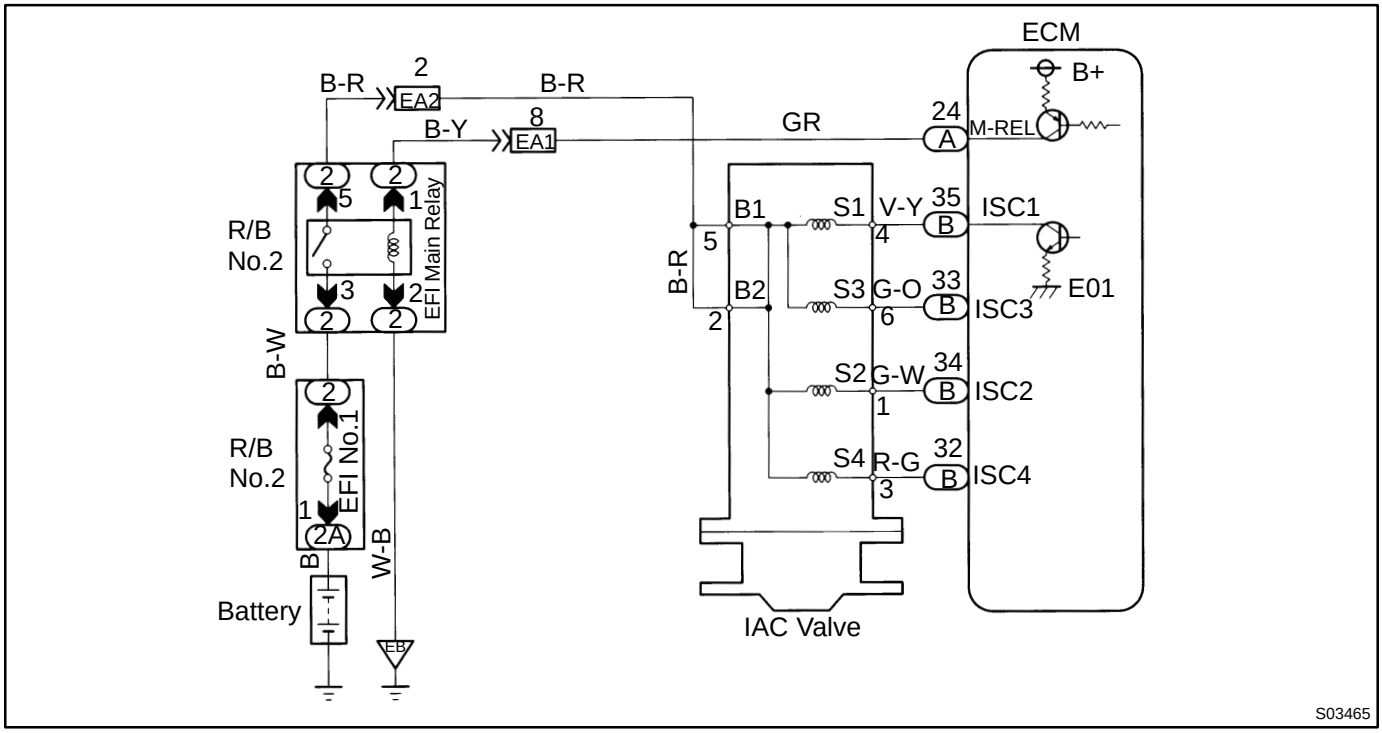

Reference INSPECTION USING OSCILLOSCOPE

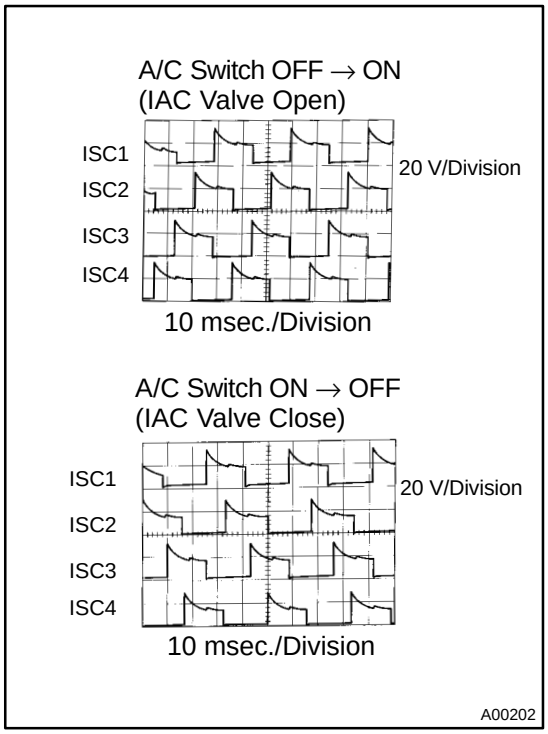

- With engine idling measure waveforms between terminals ISC1, ISC2, ISC3, ISC4 and E01 of ECM when A/C switch ON or OFF.

HINT:
The correct waveforms are as shown.

INSPECTION PROCEDURE

1	**Check air induction system (See page SF-1).**

NG → **Repair or replace.**

OK

2	**Check voltage between terminals ISC1, ISC2, ISC3, ISC4 of ECM connector and body ground.**

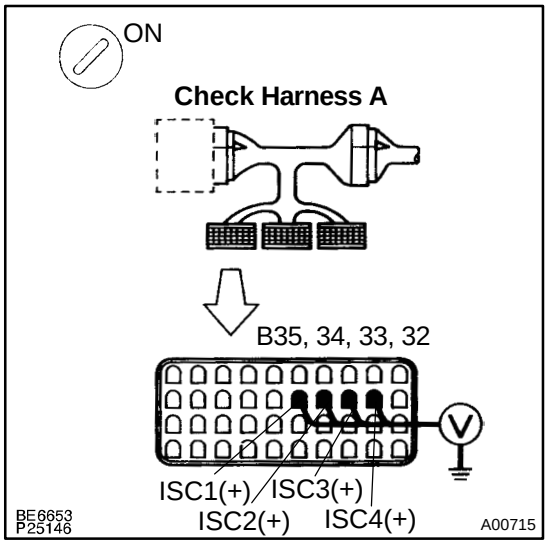

PREPARATION:

(a) Connect Check Harness A to the connectors on the wire harness side (See page DI-164).

HINT:

The other side of Check Harness A is not connected to the ECM terminals.

(b) Turn ignition switch ON.

CHECK:

Measure voltage between terminals ISC1, ISC2, ISC3, ISC4 of ECM connector and body ground.

OK:

Voltage: 9 - 14 V

OK	**Go to step 4.**

NG

3	**Check IAC valve (See page SF-52).**

NG	**Replace IAC valve.**

OK

Check for open and short in harness and connector between EFI main relay (Marking: EFI MAIN) and IAC valve, IAC valve and ECM (See page IN-28).

4	**Check operation of the IAC valve (See page SF-52).**

NG	**Repair or replace IAC valve.**

OK

Check and replace ECM (See page IN-28).

DI4T9-01

DTC	P0510	Closed Throttle Position Switch Malfunction

CIRCUIT DESCRIPTION

Refer to ”Throttle/Pedal Position Sensor/Switch ”A” Circuit Malfunction” on page DI-184 .

DTC No.	DTC Detecting Condition	Trouble Area
P0510	The closed throttle position switch does not turn ON or OFF even once when the vehicle is driven (2 trip detection logic)	• Open or short in closed throttle position switch circuit • Closed throttle position switch • ECM

HINT:

After confirming DTC P0510 use the TOYOTA hand-held tester to confirm the closed throttle position switch signal from ”CURRENT DATA”.

Throttle Valve	Closed throttle position switch signal	Malfunction
Fully Closed	OFF	Open Circuit
Fully Open	ON	Short Circuit

WIRING DIAGRAM

Refer to page DI-184 for the WIRING DIAGRAM.

INSPECTION PROCEDURE

HINT:

If DTC P0110, P0115 and P0120 are output simultaneously, E2 (sensor ground) may be open.

TOYOTA hand-held tester

1	**Connect the TOYOTA hand-held tester and read CTP switch signal.**

PREPARATION:

(a) Connect the TOYOTA hand-held tester to the DLC3.

(b) Turn ignition switch ON and push the TOYOTA hand-held tester main switch ON.

CHECK:

Read CTP switch signal on the TOYOTA hand-held tester.

RESULT:

Throttle Valve	Closed throttle position switch signal	Malfunction
Fully Closed	OFF	Open Circuit: Go to step 2.
Fully Open	ON	Open Circuit: Go to step 4.

2	Check for open in harness or ECM.

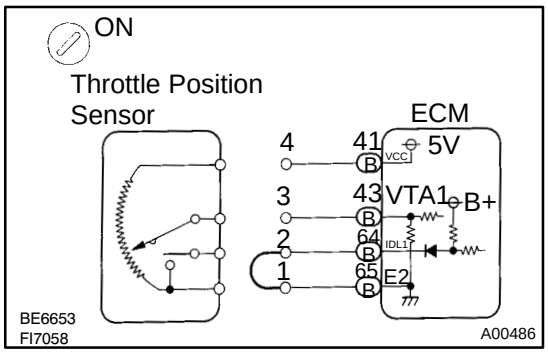

PREPARATION:

(a) Connect the TOYOTA hand-held tester to the DLC3.
(b) Disconnect the throttle position sensor connector.
(c) Connect sensor wire harness terminals between terminals 1 and 2.
(d) Turn ignition switch ON.

CHECK:

Read CTP switch signal on the TOYOTA hand-held tester.

OK:

CTP switch signal: ON

OK	Confirm good connection at sensor. If OK, replace throttle position sensor.

NG

3	Check for open in harness or ECM.

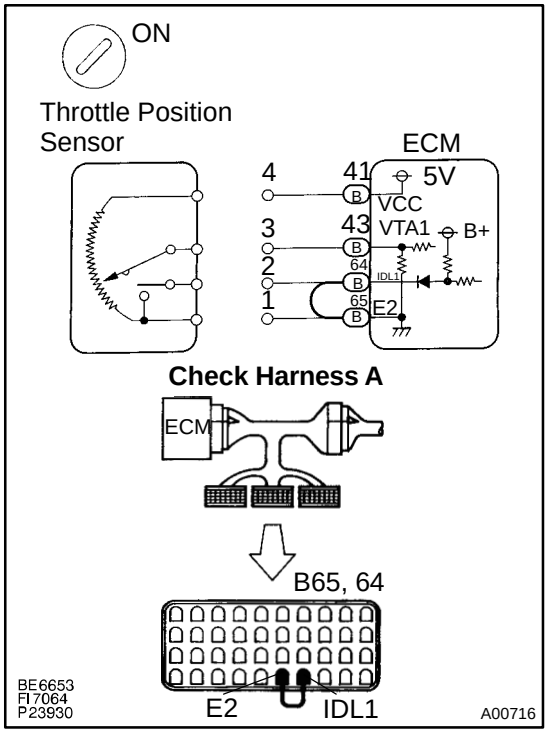

PREPARATION:

(a) Connect Check Harness A (See page DI-164).
(b) Connect between terminals IDL and E2 of ECM connector.

HINT:

Throttle position sensor connector is disconnected.

Before checking, do a visual check and contact pressure check for the connector (See page IN-28).

(c) Turn ignition switch ON.

CHECK:

Read CTP switch signal on the TOYOTA hand-held tester.

OK:

CTP switch signal: ON

OK	Open in harness between ECM and throttle position sensor, repair or replace harness.

NG

Confirm connection at ECM.
If OK, replace ECM.

4	Check for short in harness or ECM.

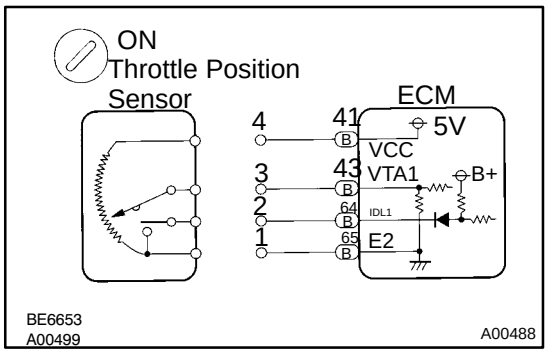

PREPARATION:

(a) Connect the TOYOTA hand-held tester to the DLC3.
(b) Disconnect the throttle position sensor connector.
(c) Turn ignition switch ON.

CHECK:

Read CTP switch signal on the TOYOTA hand-held tester.

OK:

CTP switch signal: OFF

OK	Confirm good connection at sensor. If OK, replace throttle position sensor.

NG

5	Check for short in harness or ECM.

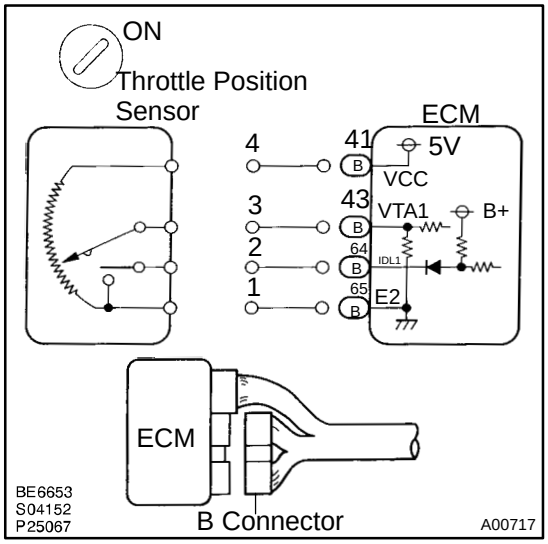

PREPARATION:

(a) DIsconnect the B connector from ECM
(See page DI-164).

HINT:

Throttle position sensor connector is disconnected.

(b) Turn ignition switch ON.

CHECK:

Read CTP switch signal on the TOYOTA hand-held tester.

OK:

CTP switch signal: OFF

OK	Short in harness between ECM and throttle position sensor, repair or replace harness.

NG

Confirm connection at ECM.
If OK, replace ECM.

OBDII scan tool (excluding TOYOTA hand-held tester)

1	**Check for open and short in harness or ECM.**

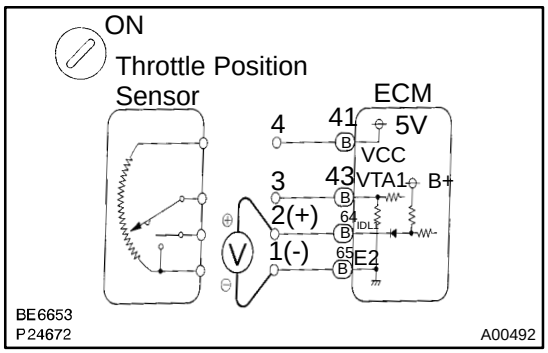

PREPARATION:

(a) Disconnect the throttle position sensor connector.

(b) Turn ignition switch ON.

CHECK:

Measure voltage between terminals 1 and 2 of throttle position sensor connector.

OK:

Voltage: 9 - 14 V

OK	**Confirm good connection at sensor. If OK, replace throttle position sensor.**

NG

2	**Check for open and short in harness and connector between throttle position sensor and ECM (See page IN-28).**

NG	**Open or short in harness between ECM and throttle position sensor.**

OK

**Confirm connection at ECM.
If OK, replace ECM.**

DTC	P0340	Camshaft Position Sensor Circuit Malfunction

CIRCUIT DESCRIPTION

The camshaft position sensors (G1 and G2 signals) consist of a signal plate and a pick up coil.
The G1, G2 signal plates each have one tooth on the outer circumference and are mounted on the intake side of the cylinder head.
When the camshaft rotates, the protrusion on the signal plate and the air gap on the pick up coil change, causing fluctuations in the magnetic field and generating an electromotive force in the pick up coil.
The ECM detects the standard crankshaft angle based on the G1, G2 signals, detects the actual crankshaft angle and engine speed by the NE signals.

DTC No.	DTC Detecting Condition	Trouble Area
P0340	No camshaft position sensor signal to ECM with engine speed 600 rpm or more	• Open or short in camshaft position sensor circuit • Camshaft position sensor • Starter • ECM
	No crankshaft position sensor signal to ECM during cranking	

WIRING DIAGRAM

Refer to page DI-212 for the WIRING DIAGRAM.

INSPECTION PROCEDURE

1	Check resistance of camshaft position sensors.

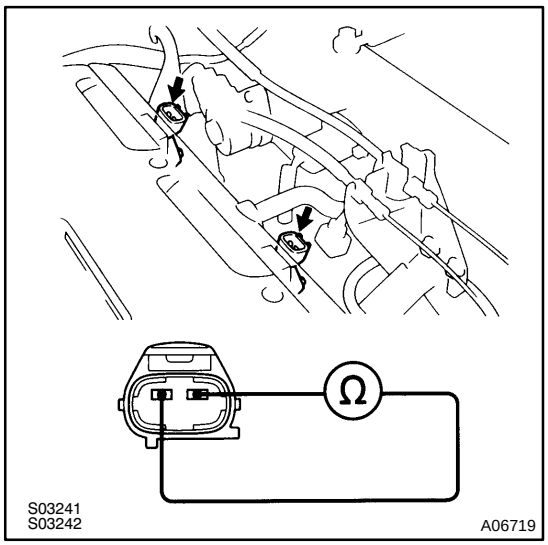

PREPARATION:
Disconnect camshaft position sensor connector.
CHECK:
Measure resistance of camshaft position sensors.
OK:

	Resistance
Cold	835 - 1,400 Ω
Hot	1,060 - 1,645 Ω

”Cold” is from - 10˚C (14˚F) to 50˚C (122˚F) and ”Hot” is from 50˚C (122˚F) to 100˚C (212˚F).

Reference INSPECTION USING OSCILLOSCOPE

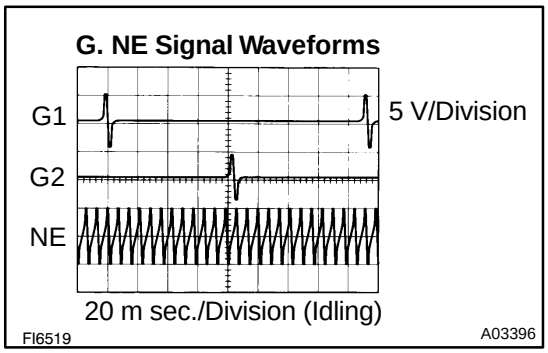

- During cranking or idling, check between ECM terminals G1, G2 and G1≧, NE and NE≧ of ECM.

HINT:
The correct waveforms are as shown.

NG → **Replace distributor.**

OK

2	**Check for open and short in harness and connector between ECM and camshaft position sensor (See page IN-28).**

NG → **Repair or replace harness or connector.**

OK

3	**Inspection sensor installation.**

NG → **Tighten the sensor.**

OK

Check and replace ECM (See page IN-28).

DI4TA-01

DTC	P1100	Barometric Pressure Sensor Circuit Malfunction

CIRCUIT DESCRIPTION

The BARO sensor is built into the ECM. This is a semiconductor pressure sensor with properties which cause its electrical resistance to change when stress is applied to the sensor's crystal (silicon) (piezoelectric effect). This sensor is used to detect the atmospheric (absolute) pressure and outputs corresponding electrical signals. Fluctuations in the air pressure cause changes in the intake air density, which can cause deviations in the air-fuel ratio. The signals from BARO sensor are used to make corrections for these fluctuations. If the ECM detects DTC P1100, the fail safe function operates and the atmospheric pressure is set at a constant 760 mmHg.

DTC No.	DTC Detecting Condition	Trouble Area
P1100	Open or short detected in barometric pressure sensor circuit (2 trip detection logic)	• ECM

INSPECTION PROCEDURE

1	**Are there any other codes (besides DTC P1100) being output?**

YES → **Go to relevant DTC chart.**

NO →

Replace ECM.

DI4TB-01

DTC	P1200	Fuel Pump Relay/ECU Circuit Malfunction

CIRCUIT DESCRIPTION

The fuel pump speed is controlled at 2 steps (high speed, low speed) by the condition of the engine (starting, light load, heavy load), when the engine starts (STA ON), the ECM sends a Hi signal (about 5 V) to the fuel pump ECU (FPC terminal).
The fuel pump ECU then outputs Hi voltage (battery positive voltage) to the fuel pump so that the fuel pump operates at high speed.
After the engine starts, during idling or light loads, the ECM outputs a Low signal (about 2.5 V) to the fuel pump ECU, the fuel pump ECU outputs Low voltage (about 9 V) to the fuel pump and causes the fuel pump to operate at low speed.
If the intake air volume increases (high engine load), the ECM sends a Hi signal to the fuel pump ECU and causes the fuel pump to operate at high speed.

DTC No.	DTC Detecting Condition	Trouble Area
P1200	Open or short in fuel pump circuit for 1 sec. or more with engine speed 1,000 rpm or less (2 trip detection logic)	• Open or short in fuel pump ECU circuit • Fuel pump ECU • ECM power source circuit • Fuel pump • ECM
	Open in input circuit of fuel pump ECU (FPC) with engine speed 1,000 rpm or less (2 trip detection logic)	
	Open or short in diagnostic signal line (DI) of fuel pump ECU with engine speed 1,000 rpm or less (2 trip detection logic)	

WIRING DIAGRAM

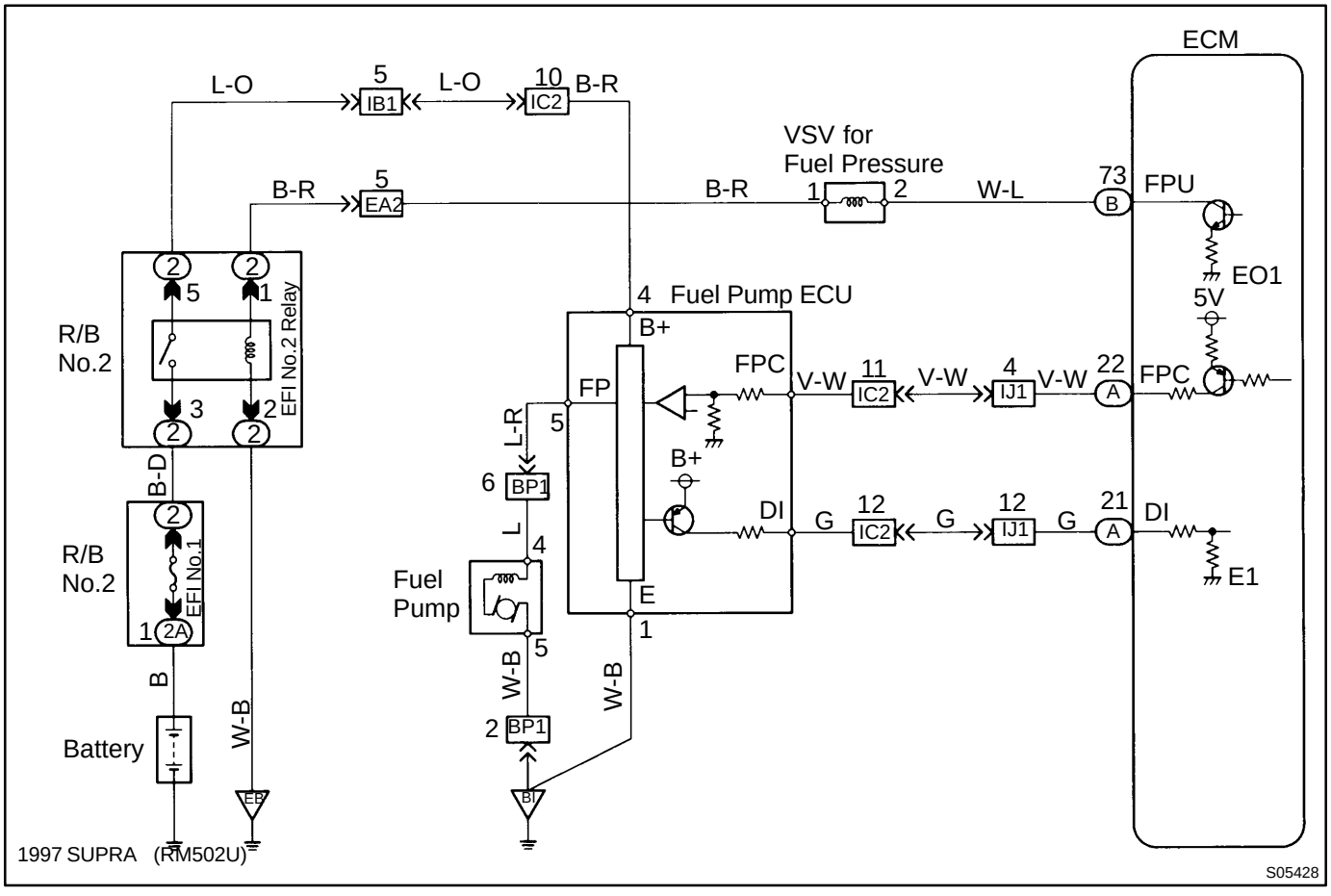

INSPECTION PROCEDURE

1	**Connect the TOYOTA hand-held tester and check operation of fuel pump (See page SF-5).**

OK → **Go to step 7.**

NG

2	**Check voltage of fuel pump ECU power source.**

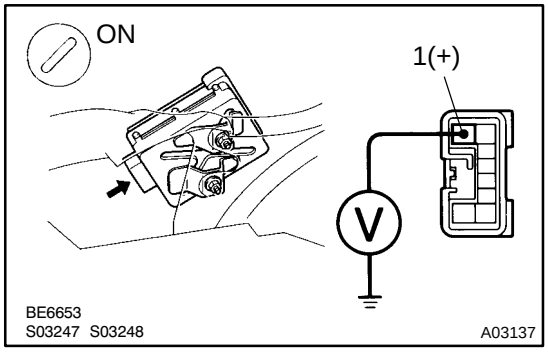

PREPARATION:
(a) Remove LH quarter trim panel (See page SF-83).
(b) Disconnect fuel pump ECU connector.
(c) Turn ignition switch ON.

CHECK:
Measure voltage between terminal 1 of fuel pump ECU connector and body ground.

OK:
Voltage: 9 - 14 V

NG → **Check for open and short in harness and connector between EFI main relay (Marking: EFI MAIN) and fuel pump ECU (See page IN-28).**

OK

3	**Check voltage between terminals 5 and 8 of fuel pump ECU connector.**

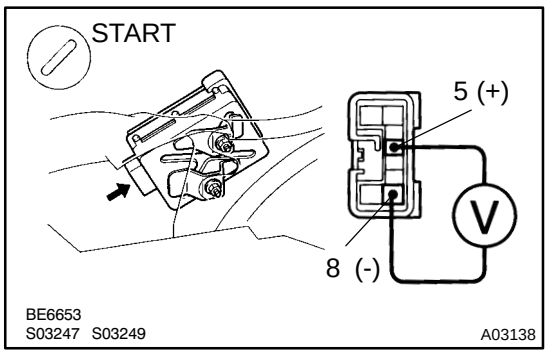

PREPARATION:
(a) Remove LH quarter trim panel (See page SF-83).
(b) Disconnect fuel pump ECU connector.

CHECK:
Measure voltage between terminals 5 and 8 of fuel pump ECU connector when ignition switch is turned to start.

OK:
Voltage: 4.5 - 5.5 V

OK → **Go to step 5.**

NG

4	Check for open and short in harness and connector between terminals FPC of ECM and 5 of fuel pump ECU, terminal 8 of fuel pump ECU and body ground (See page IN-28).

NG → Repair or replace harness or connector.

OK

Check and replace ECM.

5	Check fuel pump (See page SF-5).

NG → Repair or replace fuel pump.

OK

6	Check for open and short in harness and connector between terminal 2 and fuel pump and body ground (See page IN-28).

NG → Repair or replace harness or connector.

OK

Replace fuel pump ECU.

7	**Check for open and short in harness and connector between terminals DI of ECM and 6 of fuel pump ECU (See page IN-28).**

NG → **Repair or replace harness or connector.**

OK

Check and replace ECM.

DI4TC-01

DTC	P1300	Igniter Circuit Malfunction

CIRCUIT DESCRIPTION

The ECM determines the ignition timing, turns on Tr1 at a predetermined angle (˚CA) before the desired ignition timing and outputs an ignition signal (IGT) ”1” to the igniter.
Since the width of the IGT signal is constant, the dwell angle control circuit in the igniter determines the time the control circuit starts primary current flow to the ignition coil based on the engine rpm and ignition timing one revolution ago, that is, the time the Tr2 turns on.
When it reaches the ignition timing, the ECM turns Tr1 off and outputs the IGT signal ”0”.
This turns Tr2 off, interrupting the primary current flow and generating a high voltage in the secondary coil which causes the spark plug to spark. Also, by the counter electromotive force generated when the primary current is interrupted, the igniter sends an ignition confirmation signal (IGF) to the ECM.
The ECM stops fuel injection as a fail safe function when the IGF signal is not input to the ECM.

DTC No.	DTC Detecting Condition	Trouble Area
P1300	No IGF signal to ECM for 6 consecutive IGT signals during engine running	• Open or short in IGF or IGT circuit from igniter to ECM • Igniter • ECM

WIRING DIAGRAM

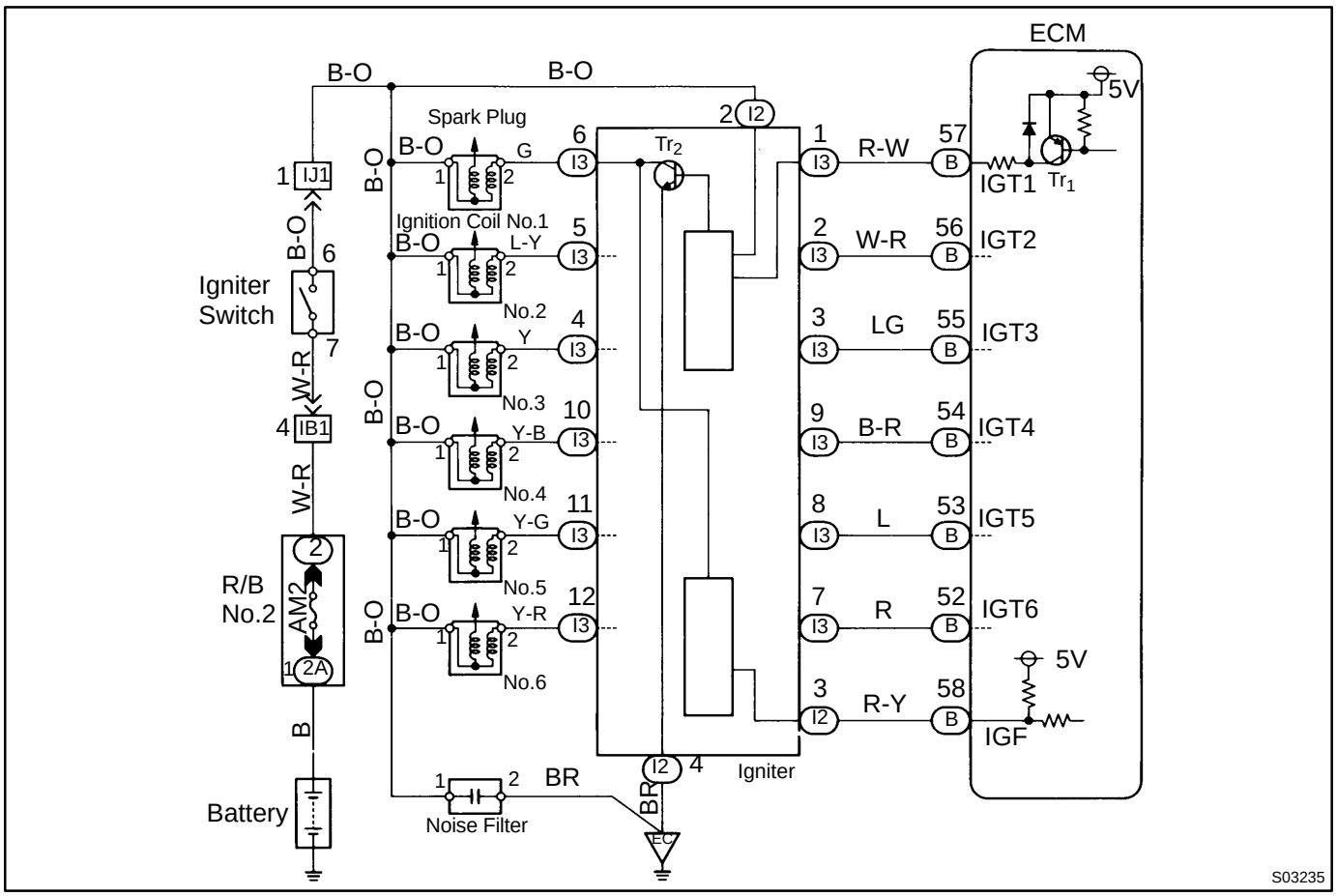

INSPECTION PROCEDURE

1	Check spark plug and spark of misfiring cylinder (See page DI-204).

NG → Go to step 4.

OK

2	Check for open and short in harness and connector in IGF signal circuit between ECM and igniter (See page IN-28).

NG → Repair or replace harness or connector.

OK

3	Disconnect igniter connector and check voltage between terminal IGF of ECM connector and body ground.

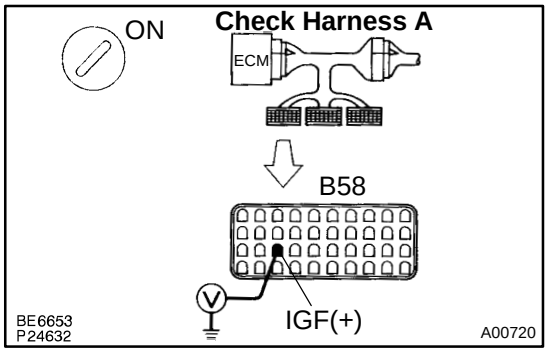

PREPARATION:

(a) Connect Check Harness A (See page DI-164).

(b) Turn ignition switch ON.

CHECK:

Measure voltage between terminal IGF of ECM connector and body ground.

OK:

Voltage: 4.5 - 5.5 V

OK → Replace igniter.

NG

Check and replace ECM (See page IN-28).

4	**Check for open and short in harness and connector in IGT 1 ~ 6 signal circuit between ECM and igniter (See page IN-28).**

NG → **Repair or replace harness or connector.**

OK

5	**Check voltage between terminal IGT 1 - 6 of ECM connector and body ground.**

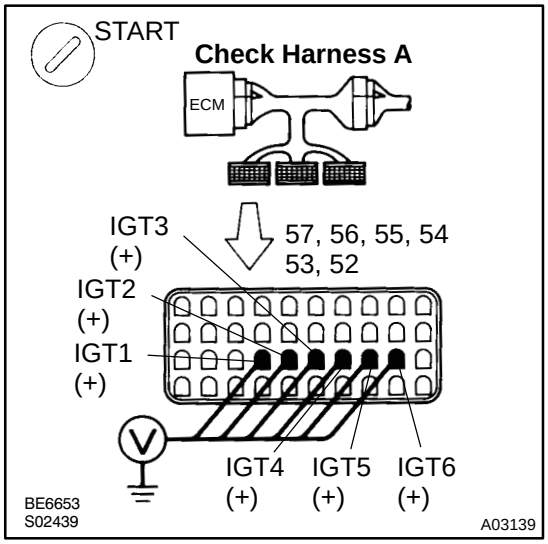

PREPARATION:

Connect Check Harness A (See page DI-164).

CHECK:

Measure voltage between terminal IGT 1 ~ 6 of ECM connector and body ground when engine is cranked.

OK:

Voltage: More than 0.1 V and less than 4.5 V

Reference INSPECTION USING OSCILLOSCOPE

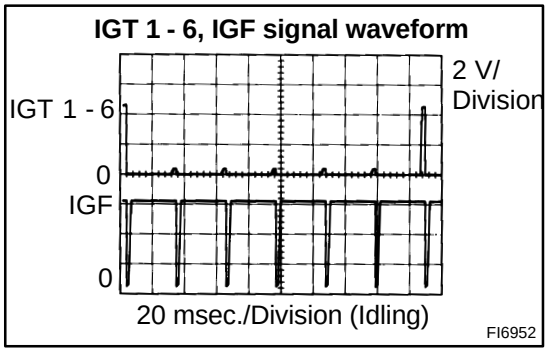

During cranking or idling, check waveforms between terminal IGT 1 - 6, IGF and E1 of ECM.

HINT:

The correct rectangular waveforms are as shown.

NG → **Check and replace ECM (See page IN-28).**

OK

6	Disconnect igniter connector and check voltage between terminal IGT 1 ~ 6 of ECM connector and body ground.

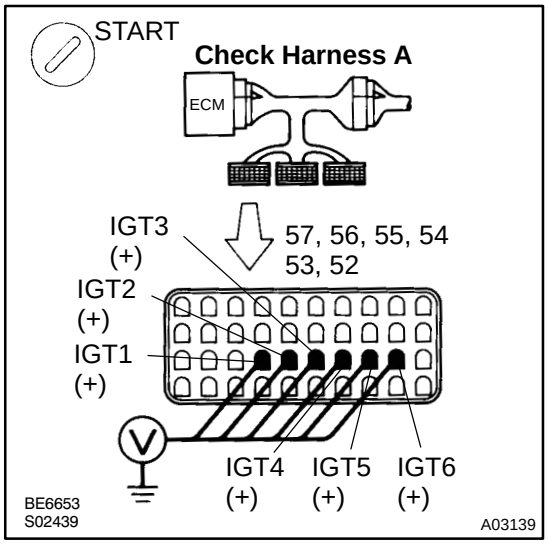

PREPARATION:

(a) Disconnect igniter connector.

(b) Connect Check Harness A (See page DI-164).

CHECK:

Measure voltage between terminal IGT 1 - 6 of ECM connector and body ground when engine is cranked.

OK:

Voltage: More than 0.1 V and less than 4.5 V

NG → **Check and replace ECM (See page IN-28).**

OK

7	Check voltage between terminal 2 of igniter connector and body ground.

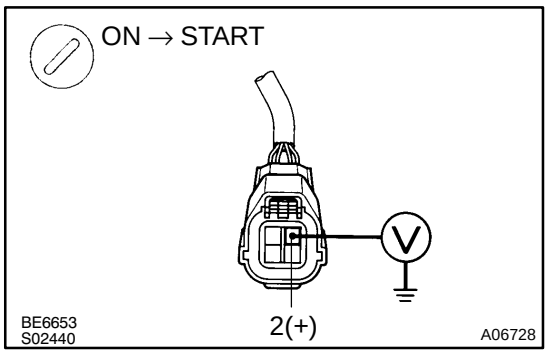

PREPARATION:

Disconnect igniter connector.

CHECK:

Measure voltage between terminal 2 of igniter connector and body ground, when ignition switch is turned to ”ON” and ”START” position.

OK:

Voltage: 9 - 14 V

NG → **Check and repair igniter power source circuit.**

OK

8	Check for open and short in harness and connector between ignition switch and ignition coil, ignition coil and igniter (See page IN-28).

NG → Repair or replace harness or connector.

OK

9	Check ignition coil (See page IG-1).

NG → Replace ignition coil.

OK

Replace igniter.

DI4TD-01

DTC	P1335	Crankshaft Position Sensor Circuit Malfunction (during engine running)

CIRCUIT DESCRIPTION

Refer to ”Crankshaft Position Sensor ”A” Circuit Malfunction” on page DI-212 .

DTC No.	DTC Detecting Condition	Trouble Area
P1335	No crankshaft position sensor signal (NE signal) to ECM with engine speed 1,000 rpm or more	• Open or short in crankshaft position sensor circuit for NE signal • Crankshaft position sensor for NE signal • Starter • ECM

See DTC P0335 for the WIRING DIAGRAM and INSPECTION PROCEDURE.

DI4TE-01

DTC	P1400	Sub Throttle Position Sensor Malfunction

CIRCUIT DESCRIPTION

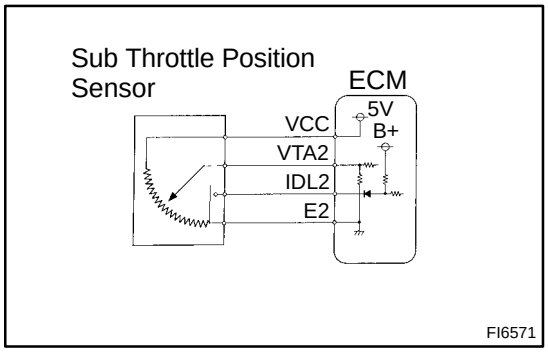

The sub throttle position sensor is built and operates in the same way as the main throttle position sensor. This sensor is used for traction control. The sub throttle valve is opened and closed by the sub throttle actuator according to signals from the throttle control ECU to control the engine output.

DTC No.	DTC Detecting Condition	Trouble Area
P1400	Condition (a) or (b) continues: (a) VTA 2 < 0.25 V, and closed sub throttle position switch is OFF (b) VTA 2 > 4.9 V	• Open or short in sub throttle position sensor circuit • Sub throttle position sensor • ECM

WIRING DIAGRAM

Refer to page DI-184 for the WIRING DIAGRAM.

INSPECTION PROCEDURE

1	Check voltage between terminals VTA2, IDL2 and E2 of ECM.

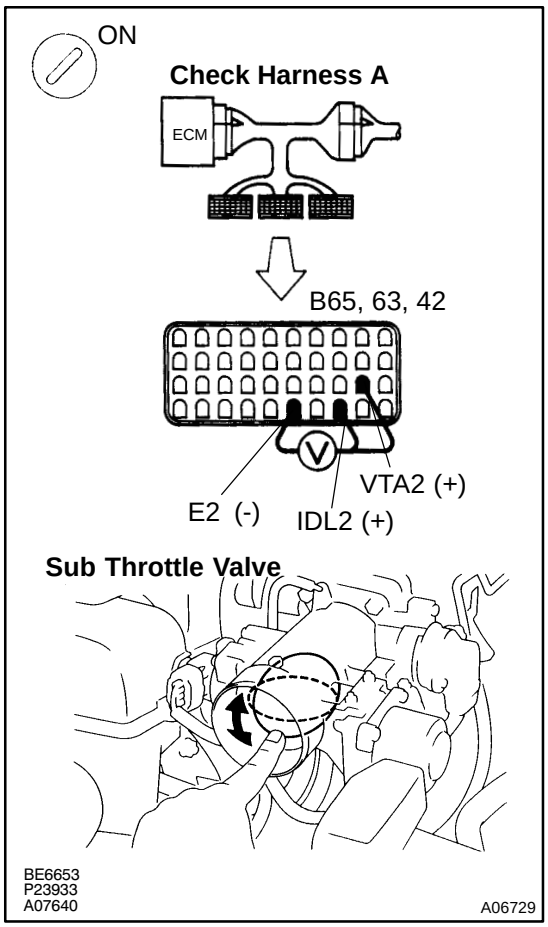

PREPARATION:

(a) Connect Check Harness A (See page DI-164).
(b) Turn ignition switch ON.
(c) Remove intake air connector pipe and disconnect sub throttle valve actuator connector.

CHECK:

Measure voltage between terminals VTA2, IDL2 and E2 of ECM when the sub throttle valve is opened gradually from the closed condition.

OK:

Throttle Valve	Terminal VTA2	Terminal IDL2
Fully Closed	0.3 - 0.8 V	0 - 3.0 V
Fully Open	3.2 - 4.9 V	9 - 14 V

HINT:

The voltage should increase steadily in proportion to the throttle valve opening angle.

NG

OK → **Check for intermittent problems (See page DI-147).**

2	Check sub throttle position sensor.

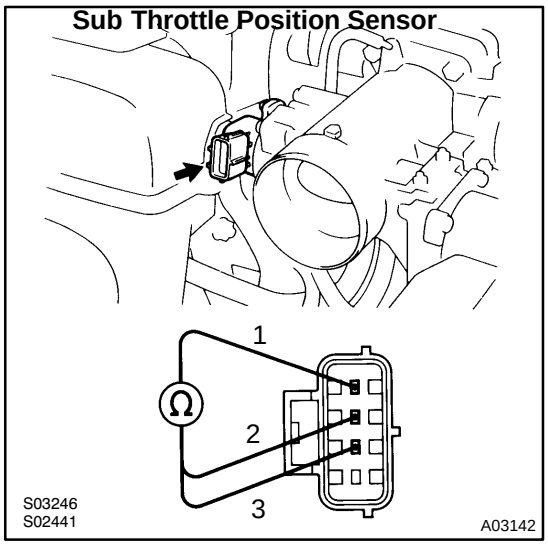

PREPARATION:

Disconnect sub throttle position sensor connector.

CHECK:

Measure resistance between terminals 3, 2 and 1 of sub throttle position sensor connector when the sub throttle valve is opened gradually from the closed condition.

OK:

Throttle Valve	Terminal 3 - 1	Terminal 2 - 1
Fully Closed	0.34 - 6.3 kΩ	Less than 0.5 kΩ
Fully Open	2.0 - 10.8 kΩ	1 MΩ or higher

HINT:

Resistance between terminals 3 and 1 should increase gradually in accordance witch the sub throttle valve opening angle.

NG → **Adjust or replace sub throttle position sensor (See page SF-44).**

OK

3	Check for open and short in harness and connector between ECM and sub throttle position sensor (See page IN-28).

NG → **Repair or replace harness or connector.**

OK

Check and replace ECM.

DI4TF-01

DTC	P1401	Sub Throttle Position Sensor Range/ Performance Problem

CIRCUIT DESCRIPTION

Refer to "Sub Throttle Position Sensor Malfunction" on page DI-258 .

DTC No.	DTC Detecting Condition	Trouble Area
P1401	Condition (a) and (b) continue for 10 sec. or more (2 trip detection logic) (a) During driving the road that difficult to slip with "AUTO mode" (b) The difference of the throttle valve open angle and the sub throttle valve opening angle is greater than 35°	• Sub throttle position sensor

INSPECTION PROCEDURE

1	**Are there any other codes (besides DTC P1401) being output?**

YES → **Go to relevant DTC chart.**

NO

Replace sub throttle position sensor.

DI4TG-01

DTC	P1405	Turbo Pressure Sensor Circuit Malfunction

CIRCUIT DESCRIPTION

The sensor detects the air intake chamber pressure and converts the pressure reading into a voltage which is used to control the turbo pressure by the ECM.
If the ECM detects the below diagnosis conditions, it operates the fail safe function to open the waste gate valve fully.

DTC No.	DTC Detecting Condition	Trouble Area
P1405	Open or short in turbo pressure sensor circuit	• Open or short in turbo pressure sensor circuit • Turbo pressure sensor • ECM

If the ECM detects DTC ”P1405” it operates the fail safe function, keeping the ignition timing and infection volume constant and making it possible to drive the vehicle.
HINT:
After confirming DTC P1405 use the OBD II scan tool or TOYOTA hand-held tester to confirm the turbo absolute pressure from ”CURRENT DATA”.

Turbo Absolute Pressure	Malfunction
0 kPa	PIM circuit short
130 kPa or more	VC circuit open or short PIM circuit open E2 circuit open

WIRING DIAGRAM

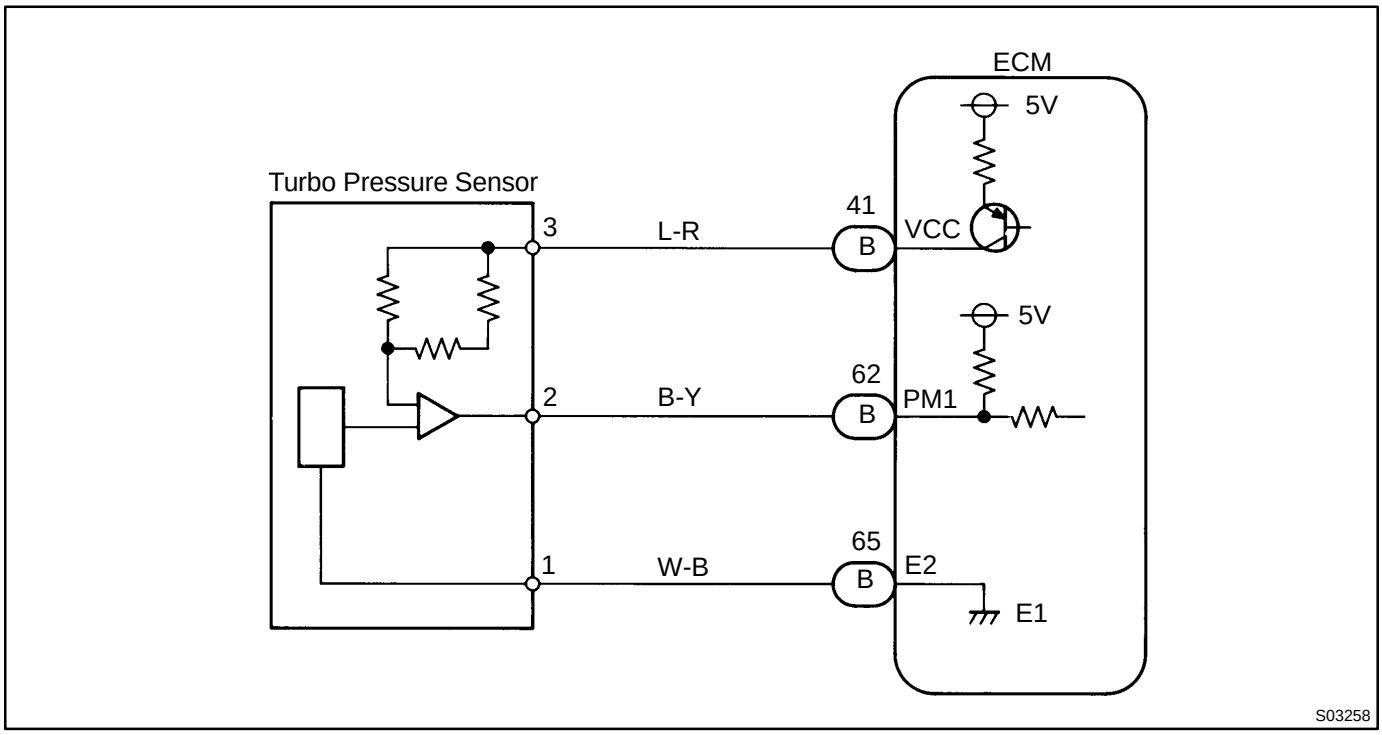

INSPECTION PROCEDURE

1	**Connect the OBD II scan tool or TOYOTA hand-held tester, and read value of manifold absolute pressure.**

PREPARATION:

(a) Connect the OBD II scan tool or TOYOTA hand-held tester to the DLC3.

(b) Turn ignition switch ON and push the OBD II scan tool or TOYOTA hand-held tester main switch ON.

CHECK:

Read value of turbo absolute pressure on the OBD II scan tool or TOYOTA hand-held tester.

OK:

Same as atmospheric pressure.

OK → **Check for intermittent problems (See page DI-147).**

NG

2	**Check voltage between terminals VCC and E2 of ECM connector.**

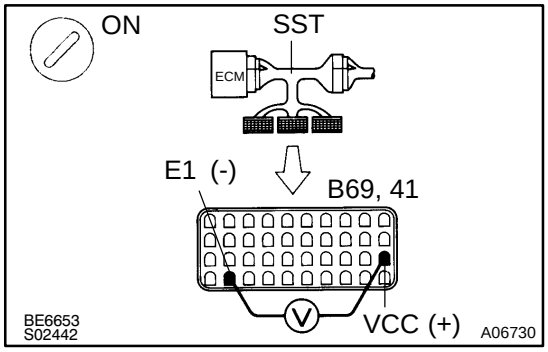

PREPARATION:

(a) Connect Check Harness A (See page DI-164).

(b) Turn ignition switch ON.

CHECK:

Measure voltage between terminals VCC and E2 of ECM connector.

OK:

Voltage: 4.5 - 5.5 V

NG → **Check and replace ECM (See page IN-28).**

OK

3	Check voltage between terminals PM1 and E2 of ECM connector.

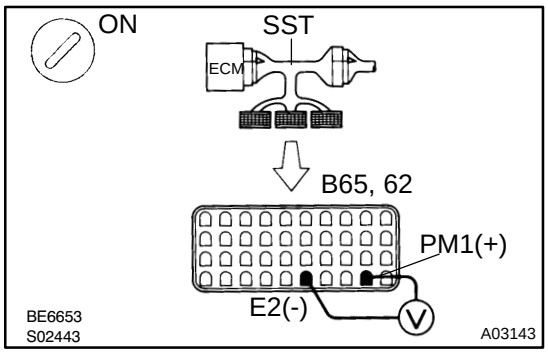

PREPARATION:

(a) Connect Check Harness A (See page DI-164).

(b) Turn ignition switch ON.

CHECK:

Measure voltage between terminals PM1 and E2 of ECM connector.

OK:

Voltage: 2.3 - 3.0 V

OK	Check and replace ECM (See page IN-28).

NG

4	Check for open and short in harness and connector between turbo pressure sensor and ECM.

NG	Repair or replace harness or connector.

OK

Replace turbo pressure sensor.

DI4TH-01

DTC	P1406	Turbo Pressure Sensor Circuit Range/ Performance Problem

CIRCUIT DESCRIPTION

Refer to ”Turbo Pressure Sensor Malfunction” on page DI-262 .

DTC No.	DTC Detecting Condition	Trouble Area
P1406	Conditions (a) and (b) continue for 5 sec. or more (2 trip detection logic) (a) Turbo pressure sensor output < 1.2 V (b) Mass air flow > 1.3 g/rev	• Turbo pressure sensor
	Conditions (a) and (b) continue for 5 sec. or more (2 trip detection logic) (a) Turbo pressure sensor output > 4.2 V (b) Mass air flow < 0.45 g/rev	

WIRING DIAGRAM

Refer to page DI-262 for the WIRING DIAGRAM.

INSPECTION PROCEDURE

1	Are there any other codes (besides DTC P1406) being output?

YES → Go to relevant DTC chart.

NO →

Replace turbo pressure sensor.

DI4TI-01

DTC	P1511	Boost Pressure Low Malfunction

CIRCUIT DESCRIPTION

To control maximum turbocharging pressure the turbocharger system includes a waste gate valve or exhaust bypass valve controlled by an actuator. The actuator is controlled by the manifold pressure which is duty controlled by the VSV based on signals from the ECM.

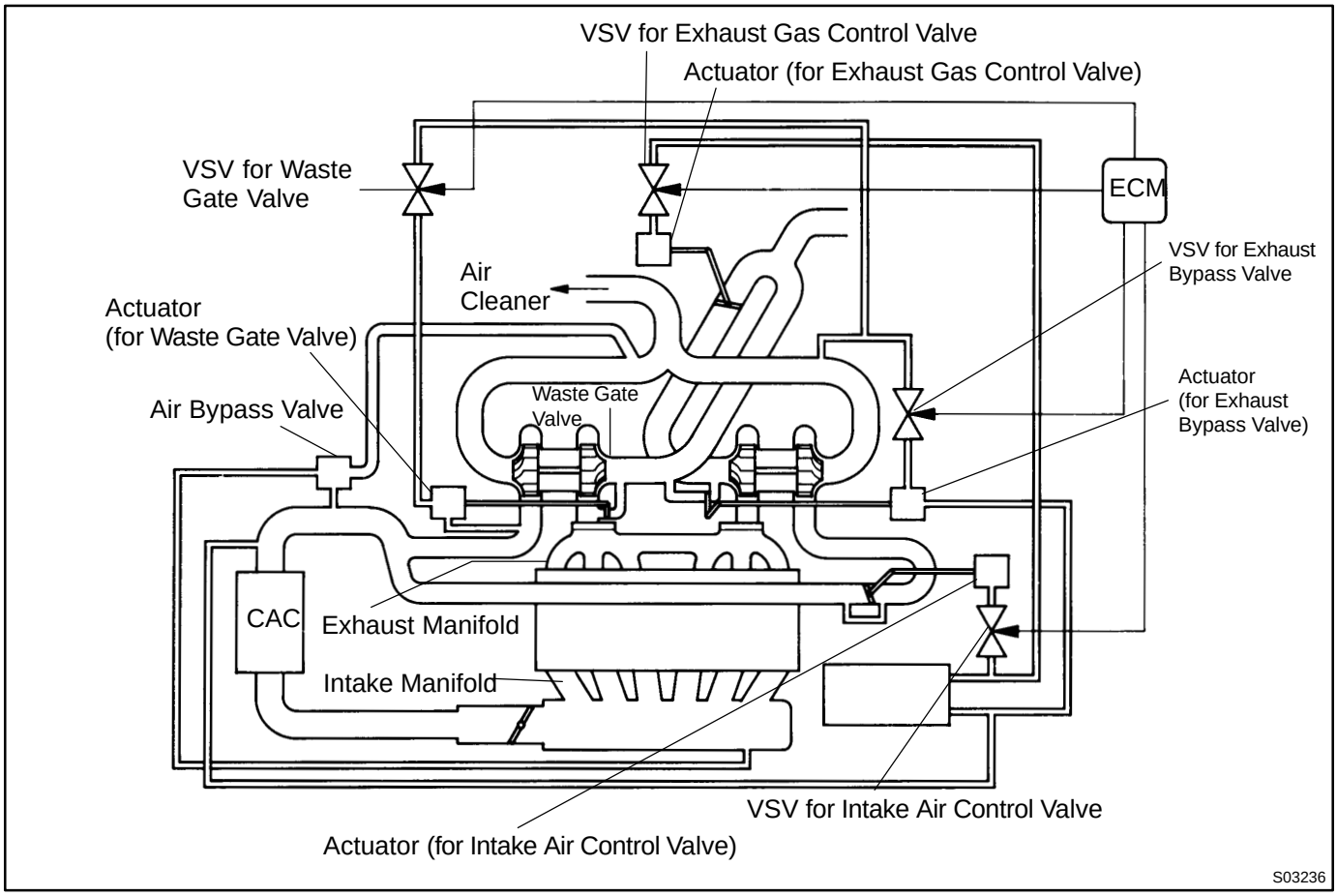

DTC No.	DTC Detecting Condition	Trouble Area
P1511	Under the following conditions (a), (b) and (c): (a) After the engine is warmed up (b) Engine rotation speed is 2,600 rpm is more (c) At the time of WOT, under the condition with +150 mmHg or less of intake pipe pressure (2 trip detection logic)	• Actuator (for waste gate valve, intake air control valve, exhaust gas control valve, and exhaust bypass valve) • Short in VSV for waste gate valve, intake air control valve, exhaust gas control valve and exhaust bypass valve circuit • ECM • Air intake (leakage or clogging)

INSPECTION PROCEDURE

TOYOTA hand-held tester

1	**Connect the TOYOTA hand-held tester and check operation of VSV for waste gate valve.**

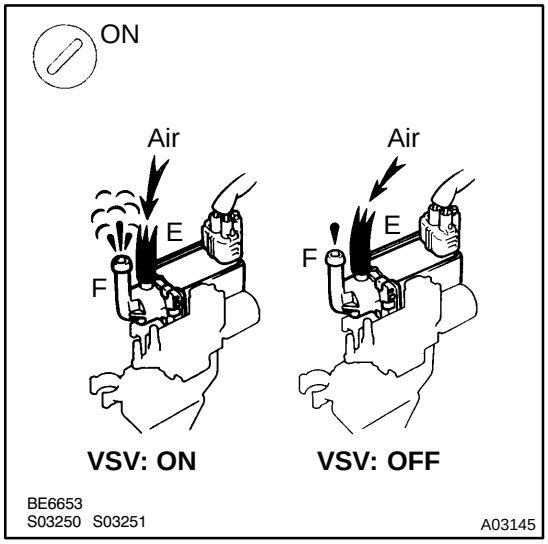

PREPARATION:

(a) Connect the TOYOTA hand-held tester to the DLC3.
(b) Turn ignition switch ON and TOYOTA hand-held tester main switch ON.
(c) Select the ACTIVE TEST mode on the TOYOTA hand-held tester.

CHECK:

Check operation of VSV when VSV is operated by the TOYOTA hand-held tester.

OK:

VSV is ON:
Air from pipe E flows out through pipe F.
VSV is OFF:
Air does not flow from pipe E to pipe F.

OK	**Go to step 3.**

NG

2	**Check VSV for waste gate valve (See page SF-63).**

NG	**Replace VSV for waste gate valve.**

OK

3	Connect the TOYOTA hand-held tester and check operation of VSV for exhaust bypass valve.

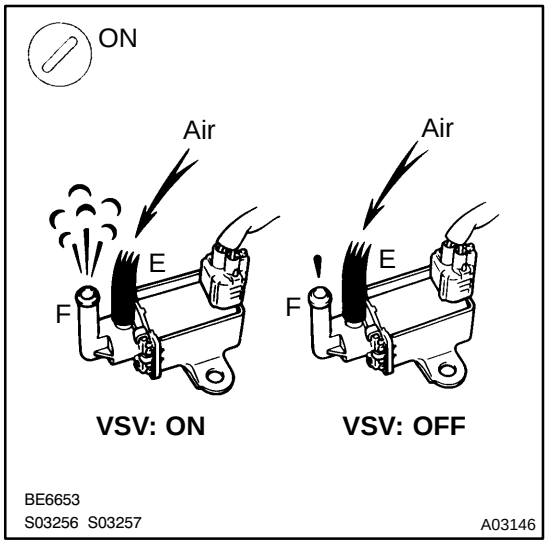

PREPARATION:

(a) Connect the TOYOTA hand-held tester to the DLC3.
(b) Turn ignition switch ON and TOYOTA hand-held tester main switch ON.
(c) Select the ACTIVE TEST mode on the TOYOTA hand-held tester.

CHECK:

Check operation of VSV when VSV is operated by the TOYOTA hand-held tester.

OK:

VSV is ON:
Air from pipe E flows out through pipe F.
VSV is OFF:
Air does not flow from pipe E to pipe F.

OK	Go to step 5.

NG

4	Check VSV for exhaust bypass valve (See page SF-67).

NG	Replace VSV for exhaust bypass valve.

OK

5	**Connect the TOYOTA hand-held tester and check operation of VSV for intake air control valve.**

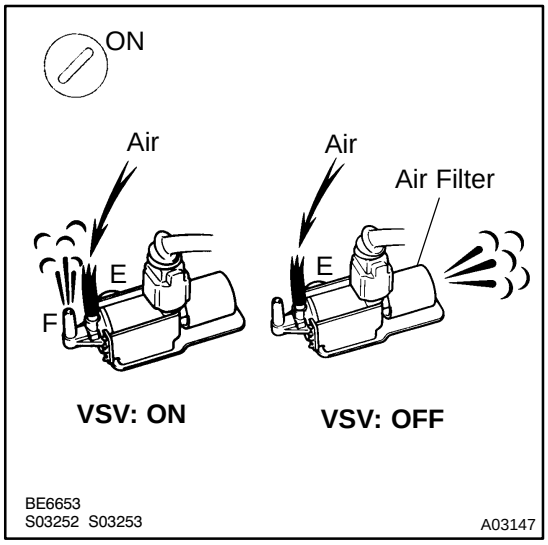

PREPARATION:

(a) Connect the TOYOTA hand-held tester to the DLC3.
(b) Turn ignition switch ON and TOYOTA hand-held tester main switch ON.
(c) Select the ACTIVE TEST mode on the TOYOTA hand-held tester.

CHECK:

Check operation of VSV when VSV is operated by the TOYOTA hand-held tester.

OK:

VSV is ON:
Air from pipe E flows out through pipe F.
VSV is OFF:
Air does not flow from pipe E to pipe F.

OK	**Go to step 7.**

NG

6	**Check VSV for intake air control valve (See page SF-61).**

NG	**Replace VSV for intake air control valve.**

OK

7	**Connect the TOYOTA hand-held tester and check operation of VSV for exhaust gas control valve.**

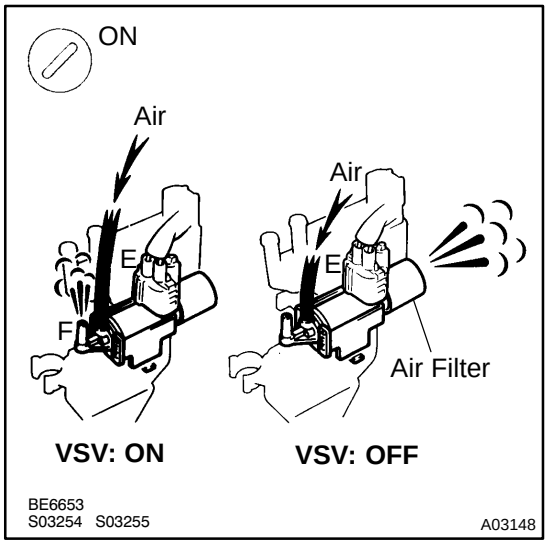

PREPARATION:

(a) Connect the TOYOTA hand-held tester to the DLC3.
(b) Turn ignition switch ON and TOYOTA hand-held tester main switch ON.
(c) Select the ACTIVE TEST mode on the TOYOTA hand-held tester.

CHECK:

Check operation of VSV when VSV is operated by the TOYOTA hand-held tester.

OK:

VSV is ON:
Air from pipe E flows out through pipe F.
VSV is OFF:
Air does not flow from pipe E to pipe F.

OK	**Go to step 10.**

NG

8	**Check VSV for exhaust gas control valve (See page SF-65).**

NG	**Replace VSV for exhaust gas control valve.**

OK

9	**Check for open and short in harness and connector between EFI main relay (Marking: EFI MAIN) and ECM (See page IN-28).**

NG	**Repair or replace harness or connector.**

OK

Check and replace ECM (See page IN-28).

10	Check connection of vacuum hose (See page EC-2).

NG → Repair or replace.

OK

11	Check turbocharger components (See page TC-18).

NG → Replace turbocharger components.

OK

Check and replace ECM (See page IN-28).

OBDII scan tool (excluding TOYOTA hand-held tester)

1	Check VSV for waste gate valve (See page SF-63).

NG → Replace VSV for waste gate valve.

OK

2	Check VSV for exhaust bypass valve (See page SF-67).

NG → Replace VSV for exhaust bypass valve.

OK

3	**Check VSV for intake air control valve (See page SF-61).**

NG → **Replace VSV for intake air control valve.**

OK

4	**Check VSV for exhaust gas control valve (See page SF-65).**

NG → **Replace VSV for exhaust gas control valve.**

OK

5	**Check voltage between terminal VSV1 ~ VSV4 of ECM connector and body ground.**

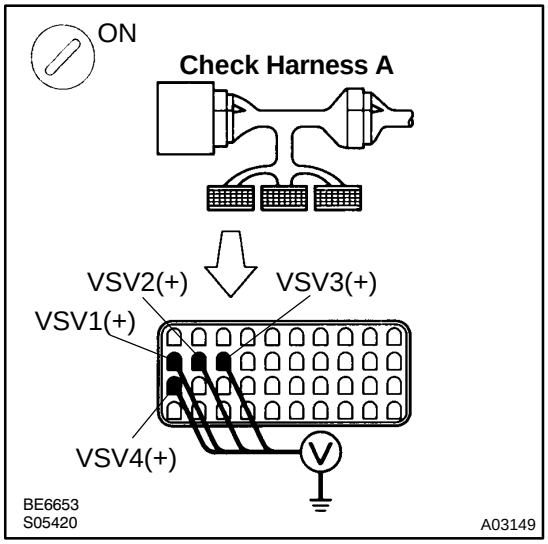

PREPARATION:

(a) Connect Check Harness A (See page DI-164).

(b) Turn ignition switch ON.

CHECK:

Measure voltage between terminal VSV1 ~ VSV4 of ECM connector and body ground.

OK:

Voltage: 9 - 14 V

NG → **Check and repair harness or connector between VSV for waste gate valve and ECM (See page IN-28).**

OK

6	Check connection of vacuum hose (See page EC-2).

NG → Repair or replace.

OK

7	Check operation of turbocharger components (See page TC-18).

NG → Replace turbocharger components.

OK

Check and replace ECM (See page IN-28).

DI4TJ-01

DTC	P1512	Boost Pressure High Malfunction

CIRCUIT DESCRIPTION

To control maximum turbocharging pressure the turbocharger system includes a waste gate valve or exhaust bypass valve controlled by an actuator. The actuator is controlled by the manifold pressure which is duty controlled by the VSV based on signals from the ECM.
If the ECM detects the below diagnosis conditions, it operates the fail safe function in which the ECM stops fuel injection.

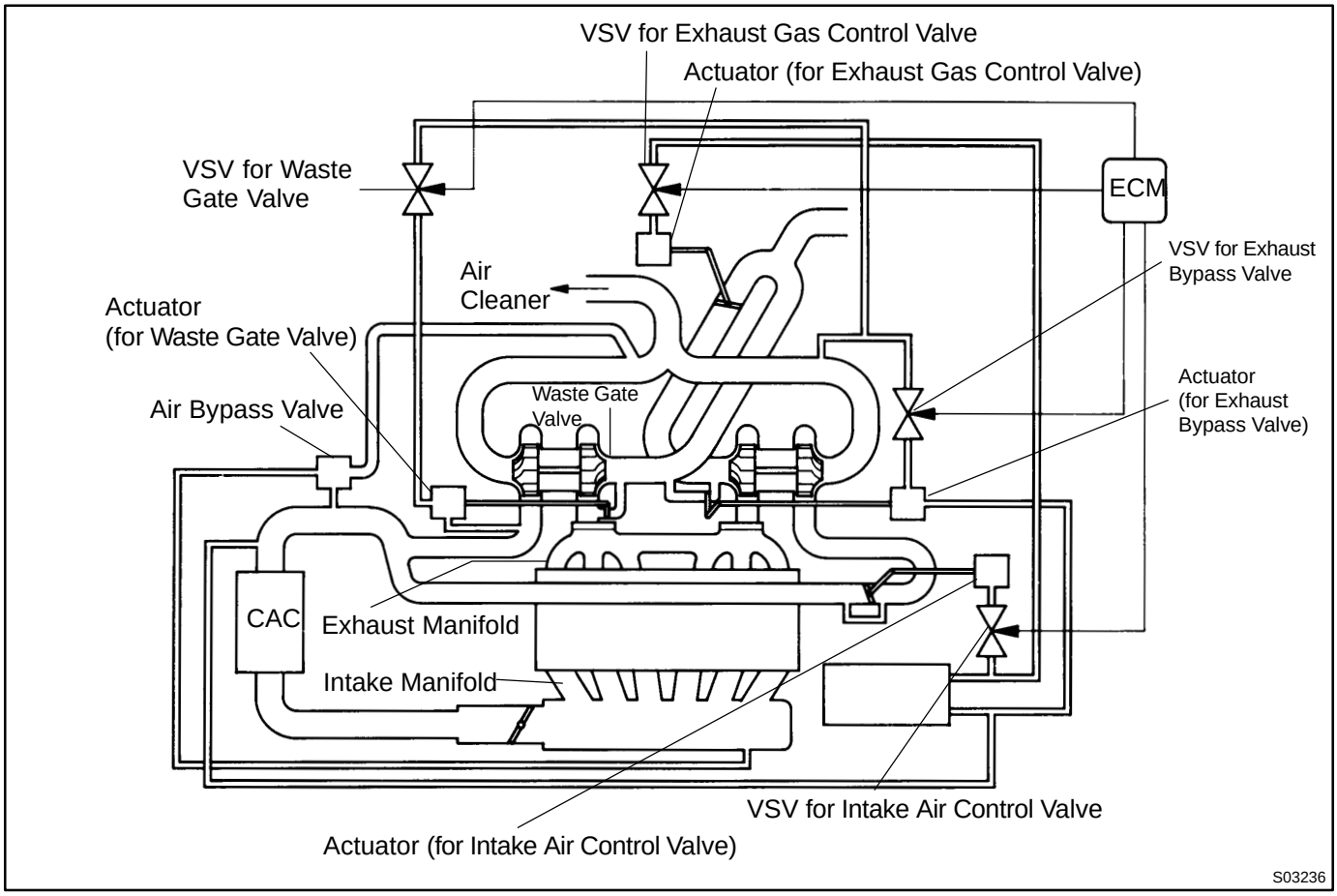

DTC No.	DTC Detecting Condition	Trouble Area
P1512	Under the following conditions (a), (b) and (c): (a) After the engine is warmed up (b) Engine rotation speed 3,400 rpm or less (c) Under the condition with +740 mmHg or more of intake pipe pressure (2 trip detection logic)	• Actuator (for waste gate valve and exhaust bypass valve) • Short in VSV for waste gate valve and exhaust bypass valve circuit • ECM

INSPECTION PROCEDURE

TOYOTA hand-held tester

1	Connect the TOYOTA hand-held tester and check operation of VSV for waste gate valve.

OK → Go to step 3.

NG

2	Check VSV for waste gate valve (See page SF-63).

NG → Replace VSV for waste gate valve.

OK

3	Connect the TOYOTA hand-held tester and check operation of VSV for exhaust bypass valve (See page DI-266).

OK → Go to step 6.

NG

4	Check VSV for exhaust bypass valve (See page SF-67).

NG → Replace VSV for exhaust bypass valve.

OK

5	Check for open and short in harness and connector between EFI main relay (Marking: EFI MAIN) and ECM (See page IN-28).

NG → Repair or replace harness or connector.

OK →

Check and replace ECM (See page IN-28).

6	Check connection of vacuum hose (See page EC-2).

NG → Repair or replace.

OK →

7	Check operation of waste gate valve (See page TC-18).

NG → Replace No.1 turbocharger.

OK →

8	Check operation of exhaust bypass valve (See page TC-18).

NG → Replace No.2 turbocharger.

OK →

Check and replace ECM (See page IN-28).

OBDII scan tool (excluding TOYOTA hand-held tester)

1	Check VSV for waste gate valve (See page SF-63).

NG → Replace VSV for waste gate valve.

OK

2	Check VSV for exhaust bypass valve (See page SF-67).

NG → Replace VSV for exhaust bypass valve.

OK

3	Check voltage between terminal VSV3, VSV4 of ECM connector and body ground.

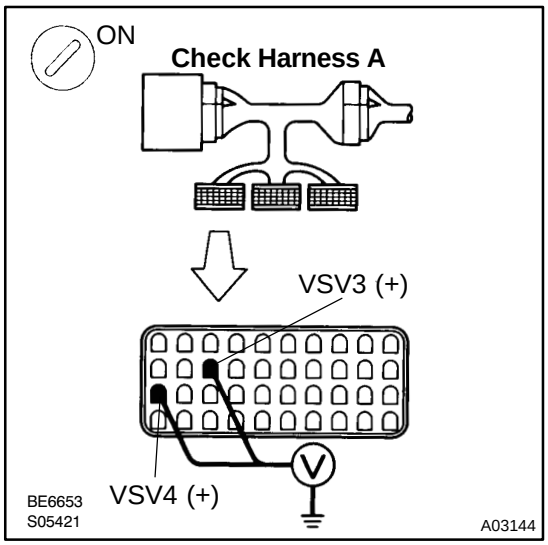

PREPARATION:
(a) Connect Check Harness A (See page DI-164).
(b) Turn ignition switch ON.

CHECK:
Measure voltage between terminal VSV3, VSV4 of ECM connector and body ground.

OK:
Voltage: 9 - 14 V

NG → Check and repair harness or connector between VSV for waste gate valve and ECM (See page IN-28).

OK

4	Check connection of vacuum hose (See page EC-2).

NG → Repair or replace.

OK

5	Check operation of waste gate valve (See page TC-18).

NG → Replace No.1 turbocharger.

OK

6	Check operation of exhaust bypass valve (See page TC-18).

NG → Replace No.2 turbocharger.

OK

Check and replace ECM (See page IN-28).

DI4TK-01

DTC	P1520	Stop Light Switch Signal Malfunction Only for A/T

CIRCUIT DESCRIPTION

This signal is used to detect when the brakes have been applied. The STP signal voltage is the same as the voltage supplied to the stop lights.

The STP signal is used mainly to control the fuel cut-off engine speed. (The fuel cut-off engine speed is reduced slightly when the vehicle is braking.)

DTC No.	DTC Detecting Condition	Trouble Area
P1520	The stop light switch does not turn off even once the vehicle is driven. (2 trip detection logic)	• Short in stop light switch signal circuit • Stop light switch • ECM

WIRING DIAGRAM

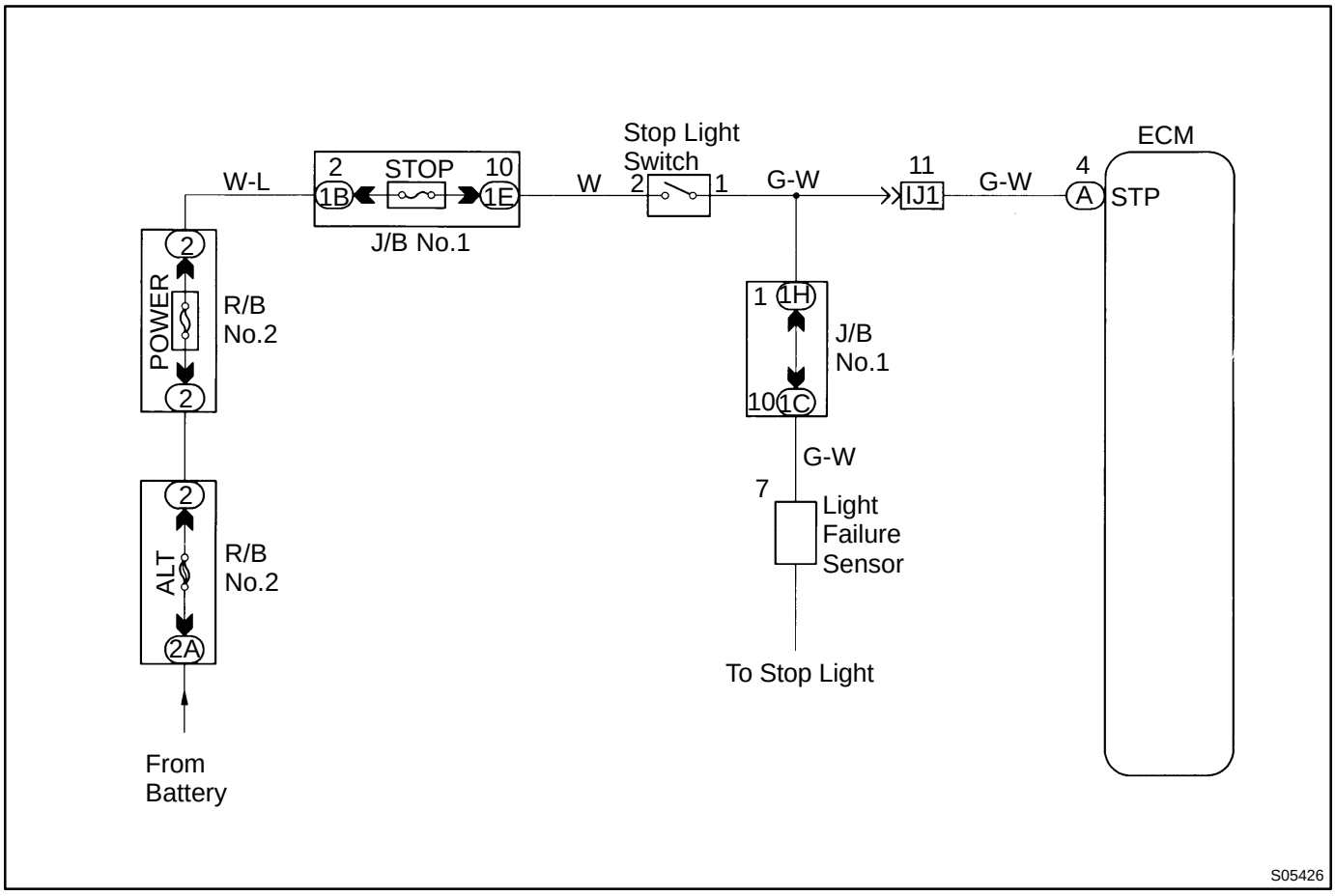

INSPECTION PROCEDURE

1	**Check operation of stop light.**

PREPARATION:
Check if the stop lights go on and off normally when the brake pedal is operated and released.

NG → **Check and repair stop light circuit.**

OK

2	**Check STP signal.**

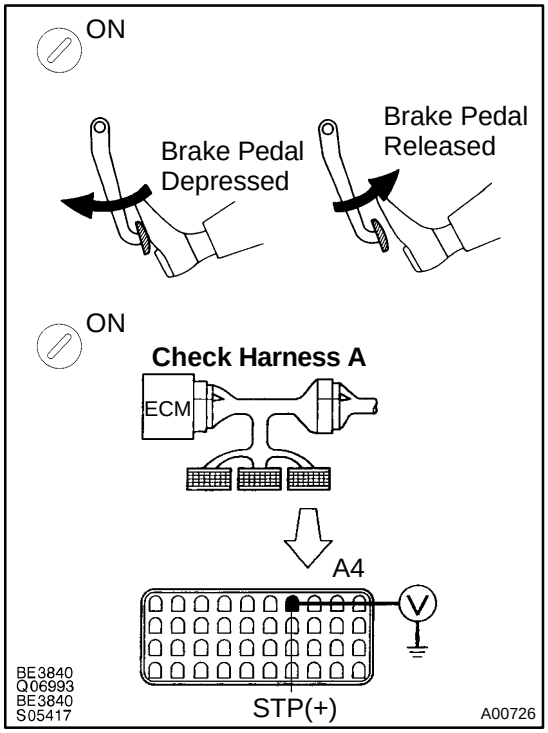

When using TOYOTA hand-held tester:

PREPARATION:

(a) Connect the TOYOTA hand-held tester to the DLC3.
(b) Turn the ignition switch ON and TOYOTA hand-held tester main switch ON.

CHECK:

Read the STP signal on the TOYOTA hand-held tester.

OK:

Break pedal is depressed: STP ... ON
Break pedal is released: STP ... OFF

When not using TOYOTA hand-held tester:

PREPARATION:

(a) Connect Check Harness A (See page DI-164).
(b) Turn ignition switch ON.

CHECK:

Check voltage between terminal STP of ECM and body ground.

OK:

Brake pedal	Voltage
Depressed	7.5 - 14 V
Released	Below 1.5 V

OK → **Check for intermittent problems (See page DI-147).**

NG

3	**Check harness and connector between ECM and stop light switch (See page IN-28).**

NG → **Repair or replace harness or connector.**

OK

Check and replace ECM.

DI4TL-01

DTC	P1600	ECM BATT Malfunction

CIRCUIT DESCRIPTION

Battery positive voltage is supplied to terminal BATT of the ECM even when the ignition switch is OFF for use by the DTC memory and air-fuel ratio adaptive control value memory, etc.

DTC No.	DTC Detecting Condition	Trouble Area
P1600	Open in back up power source circuit	• Open in back up power source circuit • ECM

HINT:

If DTC P1600 appear, the ECM does not store another DTC.

WIRING DIAGRAM

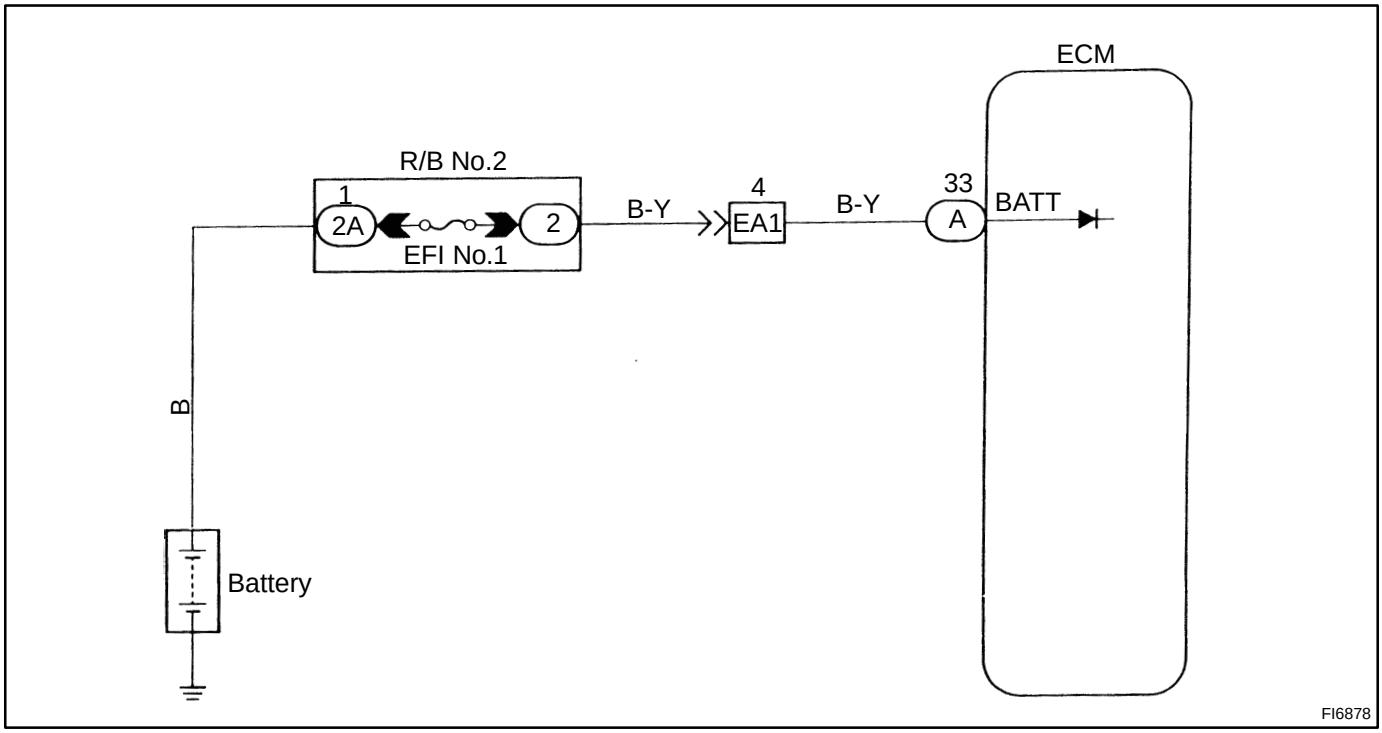

INSPECTION PROCEDURE

1	**Check voltage between terminal BATT of ECM connector and body ground.**

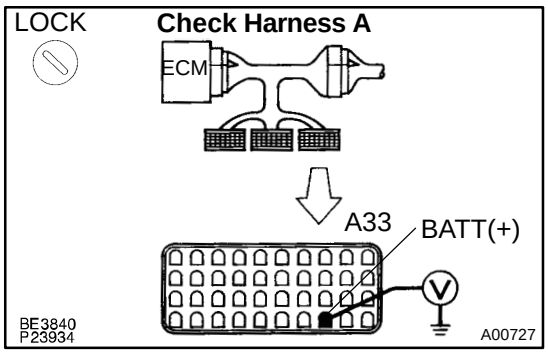

PREPARATION:
Connect Check Harness A (See page DI-164).
CHECK:
Measure voltage between terminal BATT of ECM connector and body ground.
OK:
Voltage: 9 - 14 V

OK → **Check and replace ECM (See page IN-28).**

NG

2	**Check EFI fuse.**

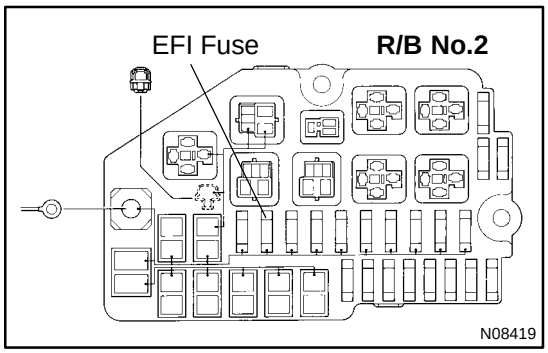

PREPARATION:
Remove EFI fuse from R/B No.2.
CHECK:
Check continuity of EFI fuse.
OK:
Continuity

NG → **Check for short in all the harness and components connected to EFI fuse.**

OK

Check and repair harness or connector between battery, EFI fuse and ECM.

DI4TM-01

DTC	P1605	Knock Control CPU Malfunction

CIRCUIT DESCRIPTION

Refer to Knock Sensor 1, 2 Circuit Malfunction on page DI-209 .

DTC No.	DTC Detecting Condition	Trouble Area
P1605	Engine control computer malfunction (for knock contorl)	• ECM

WIRING DIAGRAM

Refer to page DI-209 for WIRING DIAGRAM.

INSPECTION PROCEDURE

1	**Are there any other codes (besides DTC P1605) being output?**

YES → **Go to relevant DTC chart.**

NO →

Check and replace ECM. (See page IN-28).

DI4TN-01

DTC	P1630	Traction Control System Malfunction

CIRCUIT DESCRIPTION

This circuit is used send TRAC control information from throttle control ECU to the ECM (ETC+, ETC-), and engine control information from the ECM to the throttle control ECU (EFI+, EFI-).

DTC No.	DTC Detecting Condition	Trouble Area
P1630	Condition (a) or (b) continued for 5 sec. or more (a) No EFI ± data is received from the ECM. (b) A signal is received from the ECM indicating trouble in TRAC.	• Open or short in ETC+ or ETC- circuit • Open or short in EFI+ or EFI- circuit • Throttle control ECU • ECM

WIRING DIAGRAM

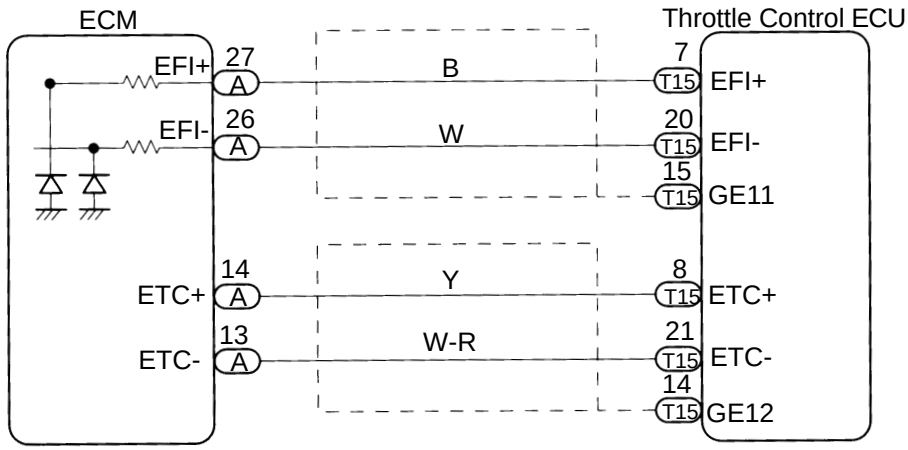

S03451

INSPECTION PROCEDURE

HINT:

When TRAC OFF indicator is OFF, there is a problem in the EFI ± circuit, and when the TRAC OFF indicator is ON, there is problem in the ETC ± circuit.

1	**Check TRAC system (See page DI-501).**

NG → **Repair or replace TRAC systems.**

OK

2	**Check for open and short in harness and connector between terminals EFI+, EFI-, ETC+ and ETC- of throttle control ECU and ECM (See page IN-28).**

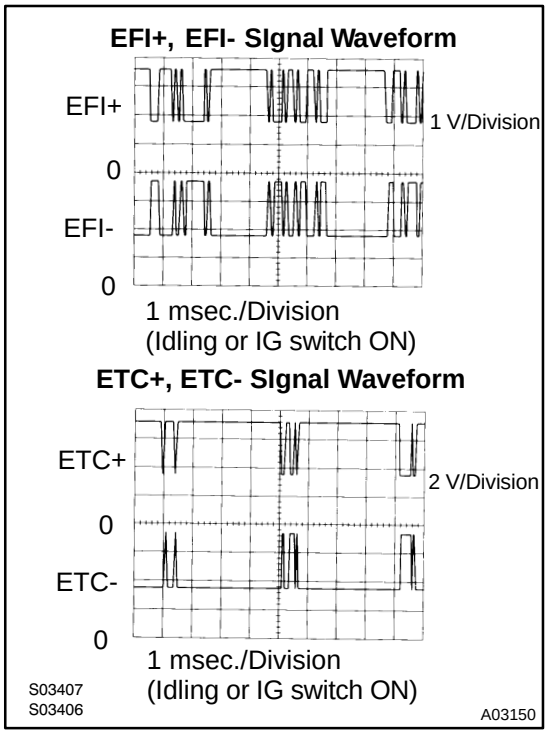

Reference INSPECTION USING OSCILLOSCOPE

- With engine idling or IG switch ON measure waveforms between terminals EFI+, EFI- and E2 of ECM.
- With engine idling or IG switch ON measure waveforms between terminals ETC+, ETC- and E2 of ECM.

NG → **Repair or replace harness or connector.**

OK

Check and replace ECM (See page IN-28).

DI4TO-01

DTC	P1652	IACV Control Circuit Malfunction

CIRCUIT DESCRIPTION

The valve controls the opening or closing of the No.2 intake air passage in order to pass the charge air from No.2 turbocharger.

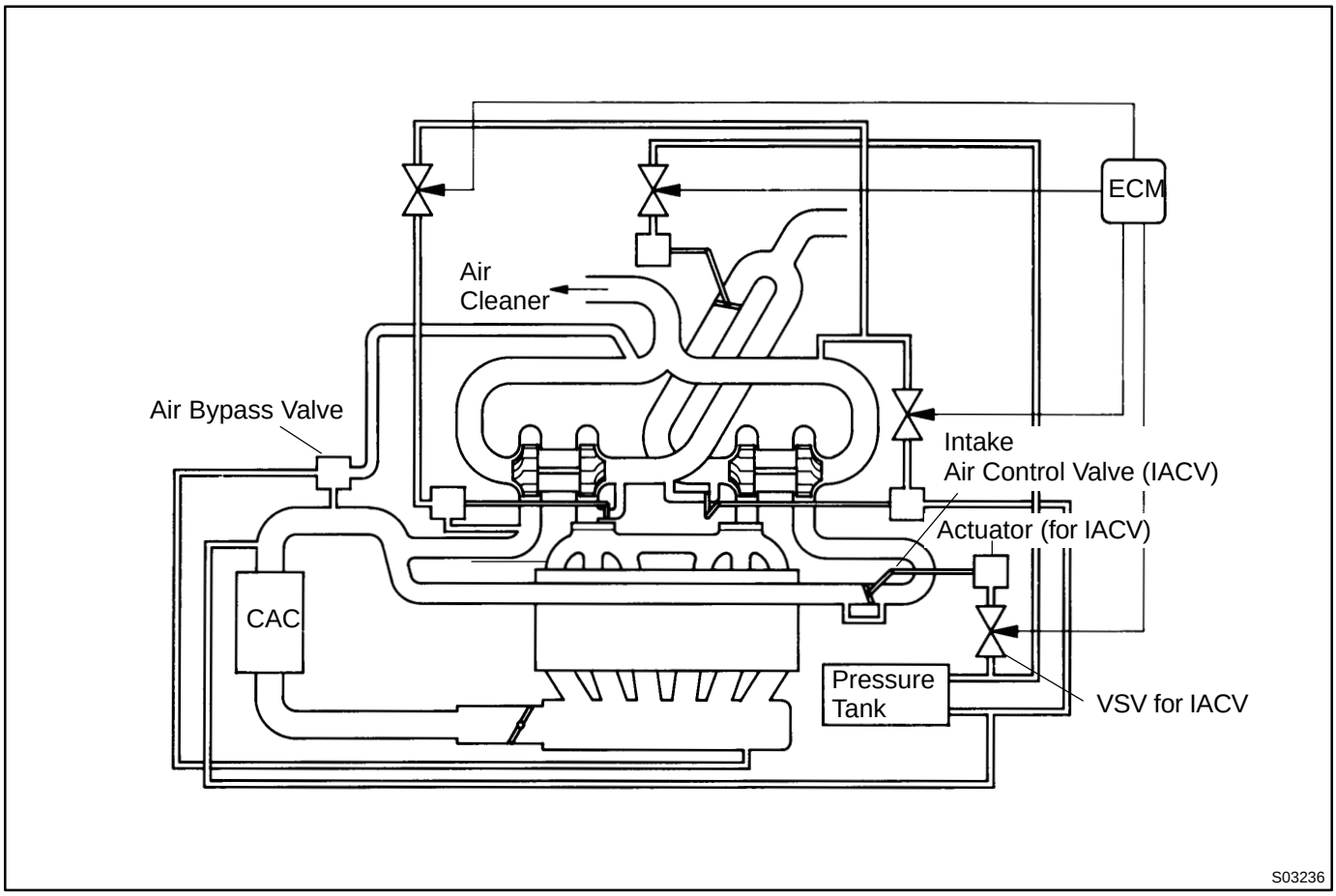

DTC No.	DTC Detecting Condition	Trouble Area
P1652	During idling, voltage level at the output terminal (VSV1) of ECM is low (2 trip detection logic)	• Open or short in VSV circuit for IACV • VSV for IACV • ECM

WIRING DIAGRAM

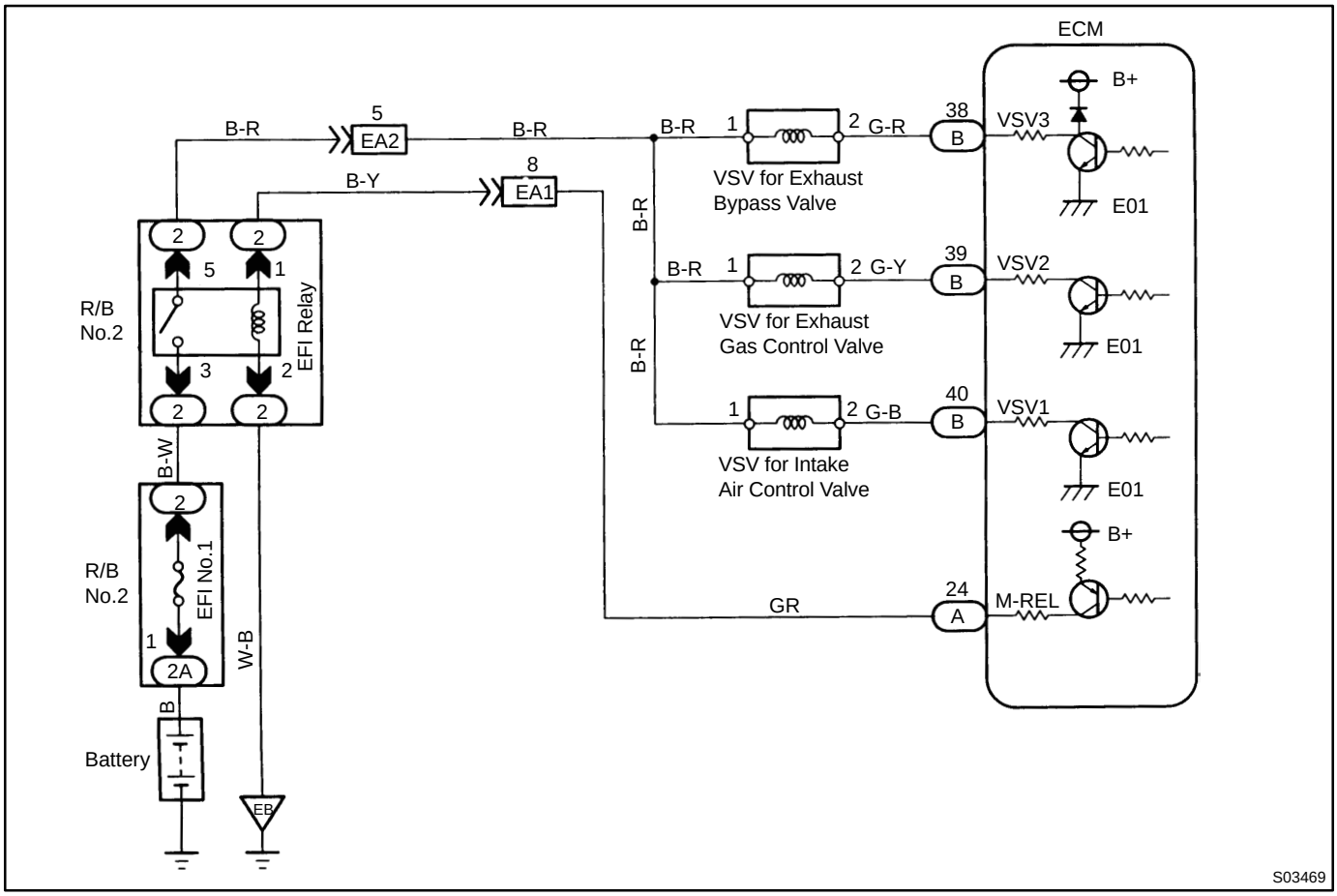

INSPECTION PROCEDURE

TOYOTA hand-held tester

1	**Connect the TOYOTA hand-held tester and check operation of VSV for IACV.**

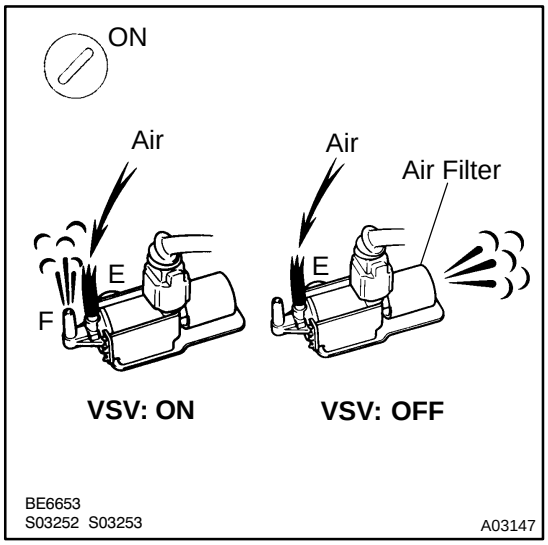

PREPARATION:

(a) Connect the TOYOTA hand-held tester to DLC3.
(b) Turn ignition switch ON and TOYOTA hand-held tester main switch ON.
(c) Select the ACTIVE TEST mode on the TOYOTA hand-held tester.

CHECK:

Check operation of VSV when VSV is operated by the TOYOTA hand-held tester.

OK:

VSV is ON:
Air from pipe E flows out through pipe F.
VSV is OFF:
Air from pipe E flows out through the air filter.

OK → **Check for intermittent problems (See page DI-147).**

NG

2	**Check VSV for IACV (See page SF-61).**

NG → **Replace VSV for IACV.**

OK

3	**Check for open and short in harness and connector between EFI main relay (Marking: EFI MAIN) and ECM (See page IN-28).**

NG → **Repair or replace harness or connector.**

OK

Check and replace ECM (See page IN-28).

OBDII scan tool (excluding TOYOTA hand-held tester)

1	**Check VSV for IACV (See page SF-61).**

NG → **Replace VSV for IACV.**

OK

2	**Check voltage between terminal VSV1 of ECM connector and body ground.**

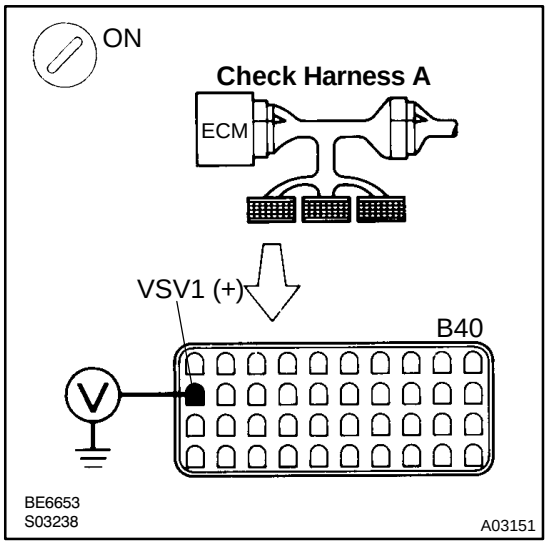

PREPARATION:

(a) Connect Check Harness A (See page DI-164).

(b) Turn ignition switch ON.

CHECK:

Measure voltage between terminal VSV1 of ECM connector and body ground.

OK:

Voltage: 9 - 14 V

NG → **Check and repair harness or connector.**

OK

Check and replace ECM (See page IN-28).

DI4TP-01

DTC	P1658	Waste Gate Valve Control Circuit Malfunction

CIRCUIT DESCRIPTION

Refer to ”Boost Pressure High Malfunction” on page DI-274 .

DTC No.	DTC Detecting Condition	Trouble Area
P1658	Under VSV operation condition of the waste gate at repid accelerating, changes of voltage level can be found at the output terminal (VSV4) of ECM (2 trip detection logic)	• Open or short in VSV circuit for waste gate valve • VSV for waste gate valve • ECM

WIRING DIAGRAM

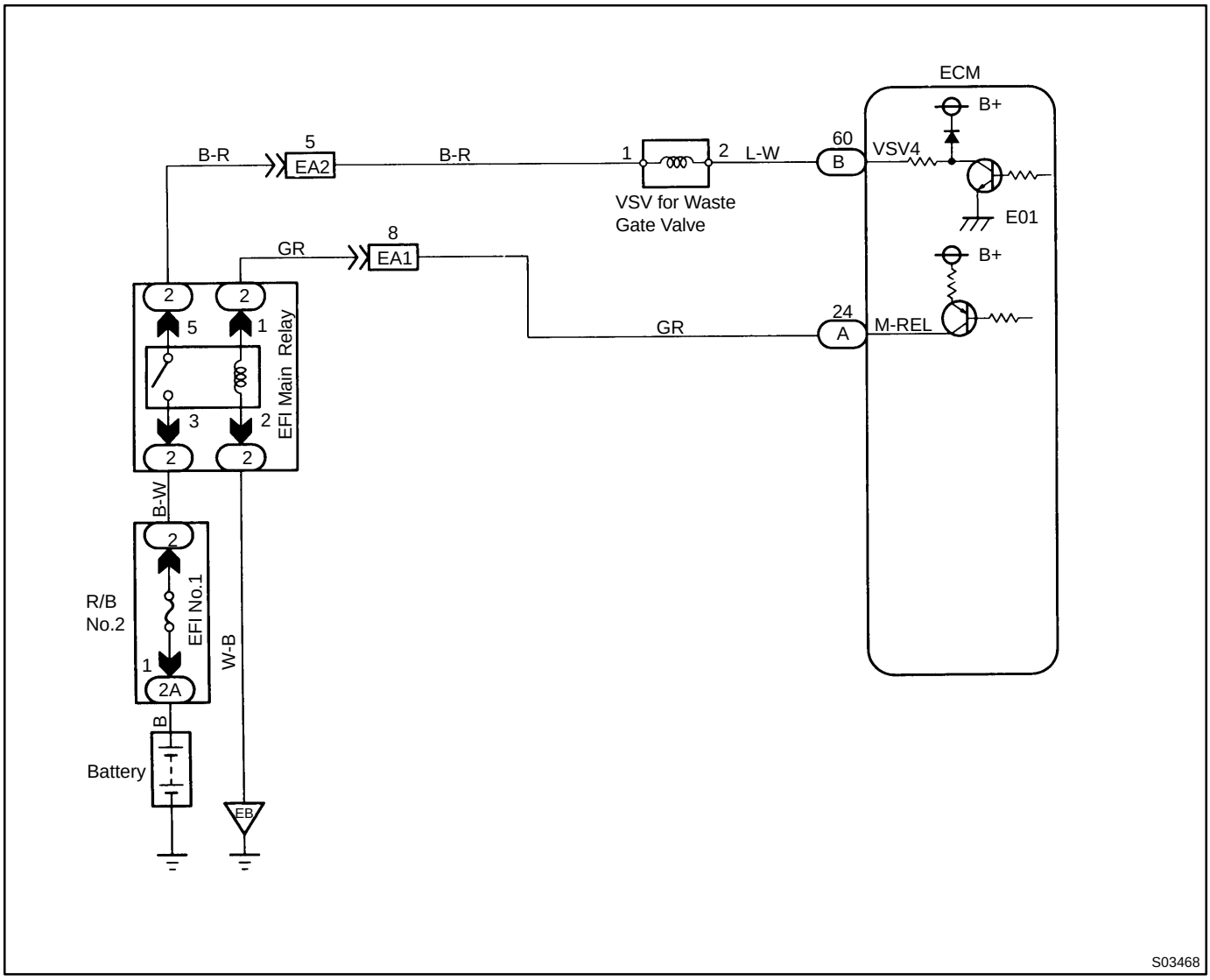

S03468

INSPECTION PROCEDURE

TOYOTA hand-held tester

1	Connect the TOYOTA hand-held tester and check operation of VSV for waste gate valve (See page DI-266).

OK → Go to step 3.

NG

2	Check VSV for waste gate valve (See page SF-63).

NG → Replace VSV for waste gate valve.

OK

3	Check for open and short in harness and connector between EFI main relay (Marking: EFI MAIN) and ECM (See page IN-28).

NG → Repair or replace harness or connector.

OK

Check and replace ECM (See page IN-28).

OBDII scan tool (excluding TOYOTA hand-held tester)

1	Check VSV for waste gate valve (See page DI-266).

NG → Replace VSV for waste gate valve.

OK

2	Check voltage between terminal VSV4 of ECM connector and body ground.

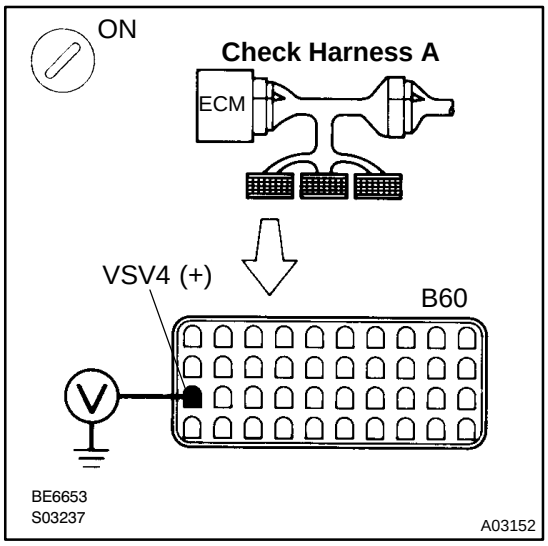

PREPARATION:

(a) Connect Check Harness A (See page DI-164).

(b) Turn ignition switch ON.

CHECK:

Measure voltage between terminal VSV4 of ECM connector and body ground.

OK:

Voltage: A/T 9 - 14 V
M/T3 V or less

NG → **Check and repair harness or connector between VSV for waste gate valve and ECM (See pageIN-28).**

OK

Check and replace ECM (See page IN-28).

DI4TQ-01

DTC	P1661	Exhaust Gas Control Valve Control Circuit Malfunction

CIRCUIT DESCRIPTION

The valve controls the opening or closing of the No.2 exhaust passage in order to operate No.2 turbocharger.

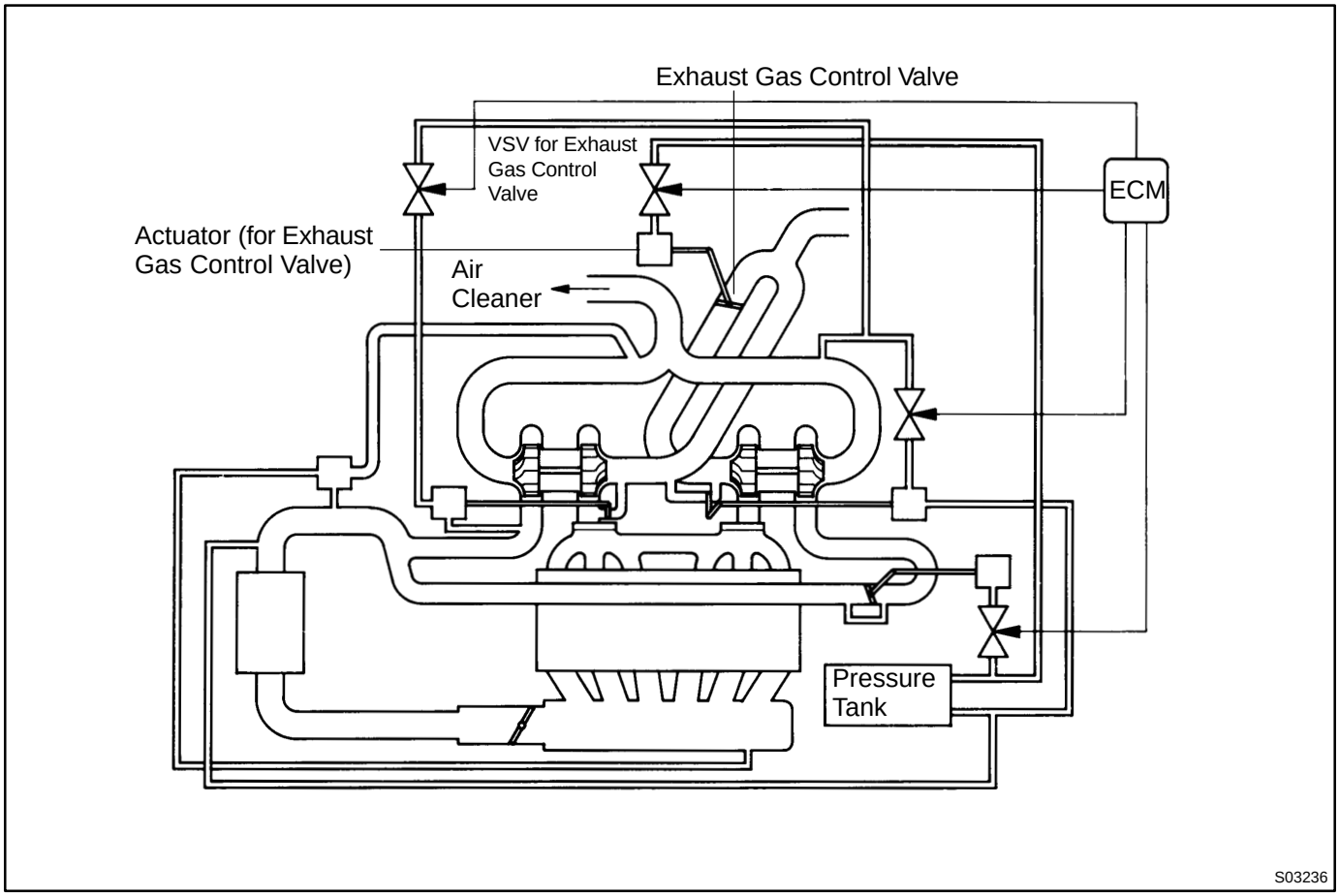

DTC No.	DTC Detecting Condition	Trouble Area
P1661	During idling, voltage level at the output terminal (VSV2) of ECM is low (2 trip detection logic)	• Open or short in VSV circuit for exhaust gas control valve • VSV for exhaust gas control valve • ECM

WIRING DIAGRAM

Refer to page DI-266 for the WIRING DIAGRAM.

INSPECTION PROCEDURE

TOYOTA hand-held tester

1	**Connect the TOYOTA hand-held tester and check operation of VSV for exhaust gas control valve.**

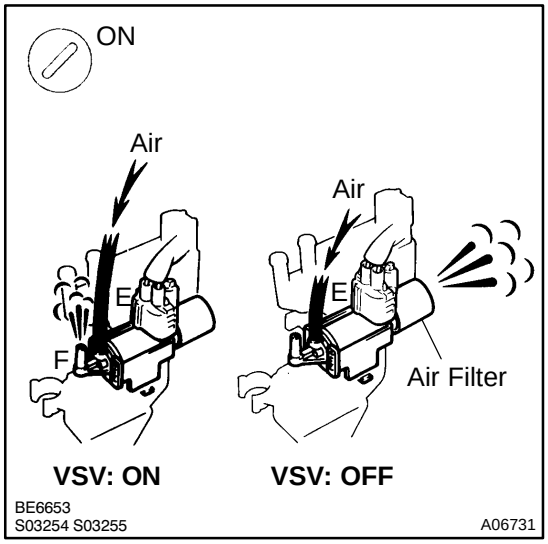

PREPARATION:

(a) Connect the TOYOTA hand-held tester to DLC3.
(b) Turn ignition switch ON and TOYOTA hand-held tester main switch ON.
(c) Select the ACTIVE TEST mode on the TOYOTA hand-held tester.

CHECK:

Check operation of VSV when VSV is operated by the TOYOTA hand-held tester.

OK:

VSV is ON:
Air from pipe E flows out through pipe F.
VSV is OFF:
Air from pipe E flows out through the air filter.

OK	**Check for intermittent problems (See page DI-147).**

NG

2	**Check VSV for exhaust gas control valve (See page SF-65).**

NG	**Replace VSV for exhaust gas control valve.**

OK

3	**Check for open and short in harness and connector between EFI main relay (Marking: EFI MAIN) and ECM (See page IN-28).**

NG → **Repair or replace harness or connector.**

OK

Check and replace ECM (See page IN-28).

OBDII scan tool (excluding TOYOTA hand-held tester)

1	**Check VSV for exhaust gas control valve (See page SF-65).**

NG → **Replace VSV for exhaust gas control valve.**

OK

2	**Check voltage between terminal VSV2 of ECM connector and body ground.**

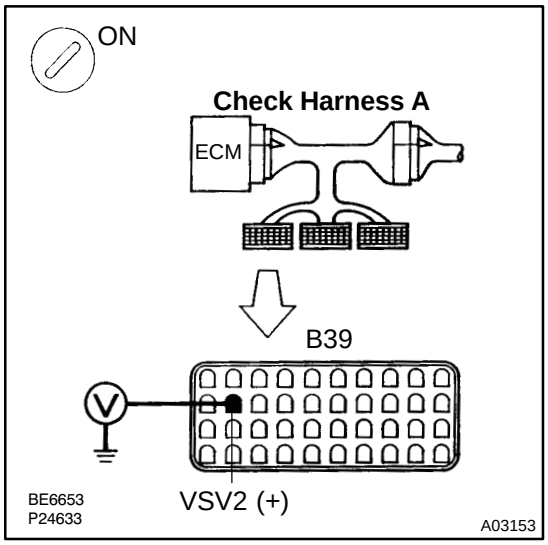

PREPARATION:

(a) Connect Check Harness A (See page DI-164).

(b) Turn ignition switch ON.

CHECK:

Measure voltage between terminal VSV2 of ECM connector and body ground.

OK:

Voltage: 9 - 14 V

NG → **Check and repair harness or connector.**

OK

Check and replace ECM (See page IN-28).

DTC	P1662	Exhaust Bypass Valve Control Circuit Malfunction

CIRCUIT DESCRIPTION

This valve controls the opening or closing of the exhaust bypass passage to ensure a smooth transition from 1 turbo operation to 2 turbo operation.

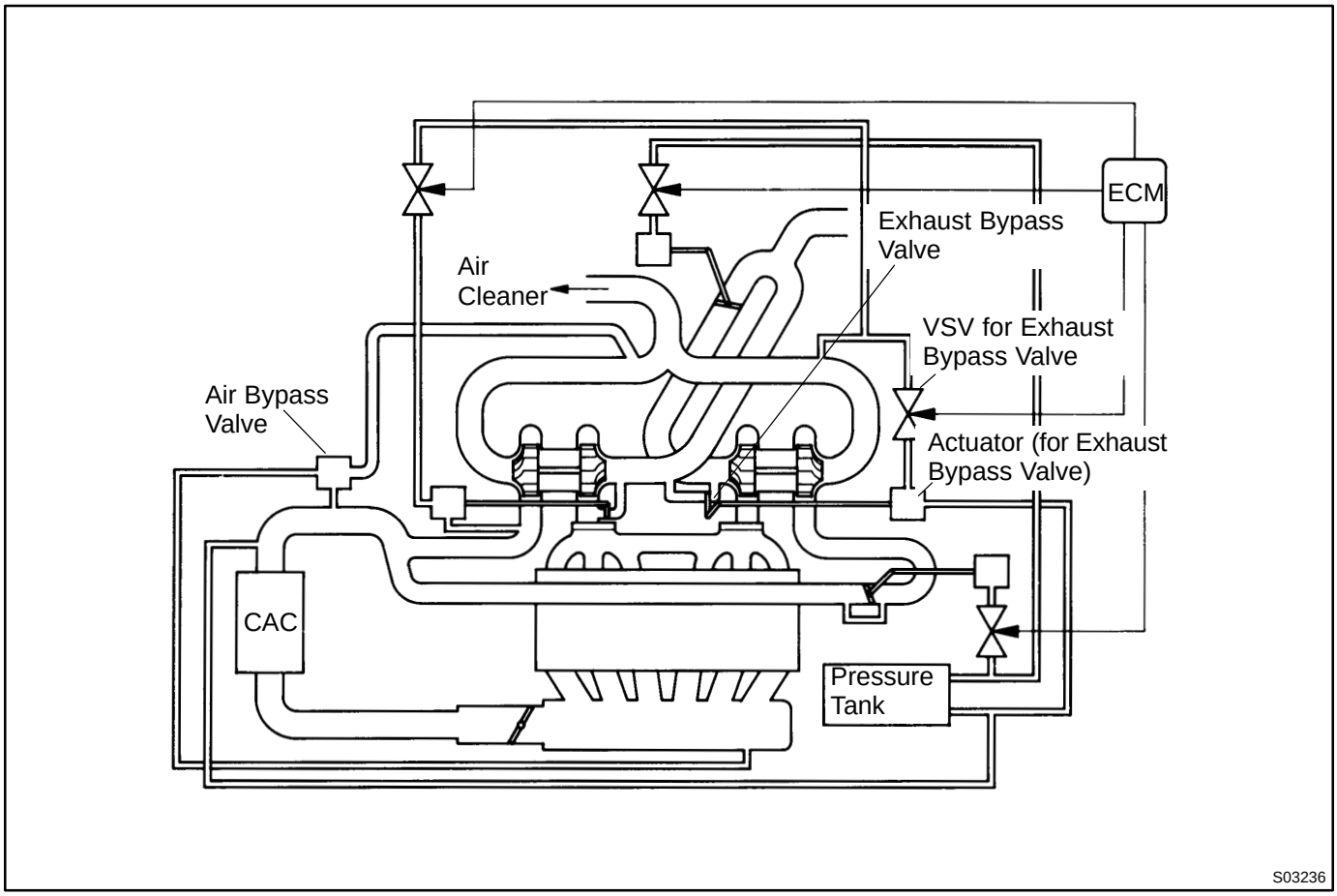

DTC No.	DTC Detecting Condition	Trouble Area
P1662	During idling, voltage level at the output terminal (VSV3) of ECM is low (2 trip detection logic)	• Open or short in VSV circuit for exhaust bypass valve • VSV for exhaust bypass valve • ECM

WIRING DIAGRAM

Refer to page DI-266 for the WIRING DIAGRAM.

INSPECTION PROCEDURE

TOYOTA hand-held tester

1	**Connect the TOYOTA hand-held tester and check operation of VSV for exhaust bypass valve.**

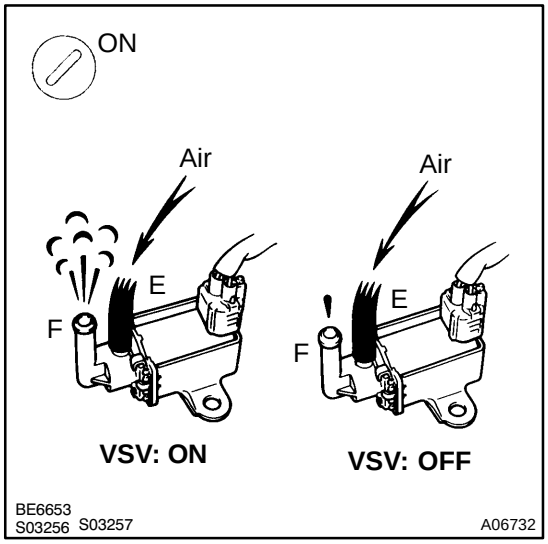

PREPARATION:

(a) Connect the TOYOTA hand-held tester to the DLC3.
(b) Turn ignition switch ON and TOYOTA hand-held tester main switch ON.
(c) Select the ACTIVE TEST mode on the TOYOTA hand-held tester.

CHECK:

Check operation of VSV when VSV is operated by the TOYOTA hand-held tester.

OK:

VSV is ON:
Air from pipe E flows out through pipe F.
VSV is OFF:
Air does not flow from pipe E to pipe F.

OK	**Check for intermittent problems (See page DI-147).**

NG

2	**Check VSV for exhaust bypass valve (See page SF-67).**

NG	**Replace VSV for exhaust bypass valve.**

OK

3	**Check for open and short in harness and connector between EFI main relay (Marking: EFI MAIN) and ECM (See page IN-28).**

NG → **Repair or replace harness or connector.**

OK

Check and replace ECM (See page IN-28).

OBDII scan tool (excluding TOYOTA hand-held tester)

1	**Check VSV for exhaust bypass valve (See page SF-67).**

NG → **Replace VSV for exhaust bypass valve.**

OK

2	**Check voltage between terminal VSV3 of ECM connector and body ground.**

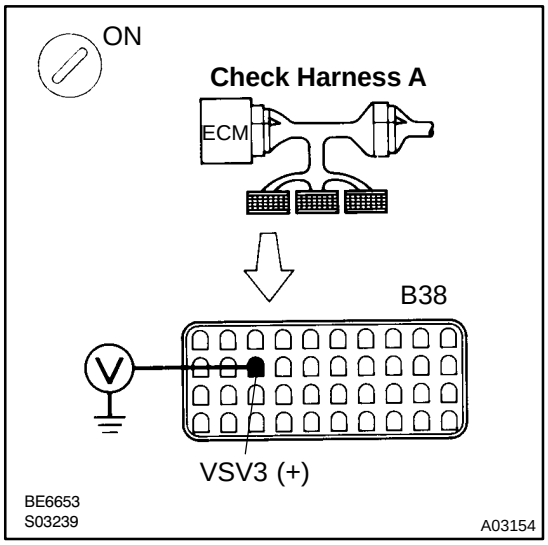

PREPARATION:

(a) Connect Check Harness A (See page DI-164).

(b) Turn ignition switch ON.

CHECK:

Measure voltage between terminal VSV3 of ECM connector and body ground.

OK:

Voltage: 9 - 14 V

NG → **Check and repair harness or connector.**

OK

Check and replace ECM (See page IN-28).

DI4TS-01

DTC	P1780	Park/Neutral Position Switch Malfunction

CIRCUIT DESCRIPTION

The park/neutral position switch goes on when the shift lever is in the N or P shift position. When it goes on terminal NSW of the ECM is grounded to body ground via the starter relay thus the terminal NSW voltage becomes 0 V. When the shift lever is in the D, 2, L or R position, the park/neutral position switch goes off, so the voltage of ECM terminal NSW becomes battery voltage, the voltage of the ECM internal power source. If the shift lever is moved from the N position to the D position, this signal is used for air-fuel ratio correction and for idle speed control (estimated control), etc.

DTC No.	DTC Detecting Condition	Trouble Area
P1780	2 or more switches are ON simultaneously for "N", "2" and "L" position (2 trip detection logic)	• Short in park/neutral position switch circuit • Park/neutral position switch • ECM
	When driving under conditions (a) and (b) for 30 sec. or more the park/neutral position switch is ON (N position) (2 trip detection logic) (a) Vehicle speed: 70 km/h (44 mph) or more (b) Engine speed: 1,500 ~ 2,500 rpm	

HINT:
After confirming DTC P1780 use the TOYOTA hand-held tester to confirm the PNP switch signal from "CURRENT DATA".

WIRING DIAGRAM

Refer to page DI-373 for the WIRING DIAGRAM

INSPECTION PROCEDURE

Refer to page DI-373 for the INSPECTION PROCEDURE

DI4TT-01

Starter Signal Circuit

CIRCUIT DESCRIPTION

When the engine is cranked, the intake air flow is slow, so fuel vaporization is poor. A rich mixture is therefore necessary in order to achieve good startability. While the engine is being cranked, the battery positive voltage is applied to terminal STA of the ECM. The starter signal is mainly used to increase the fuel injection volume for the starting injection control and after-start injection control.

WIRING DIAGRAM

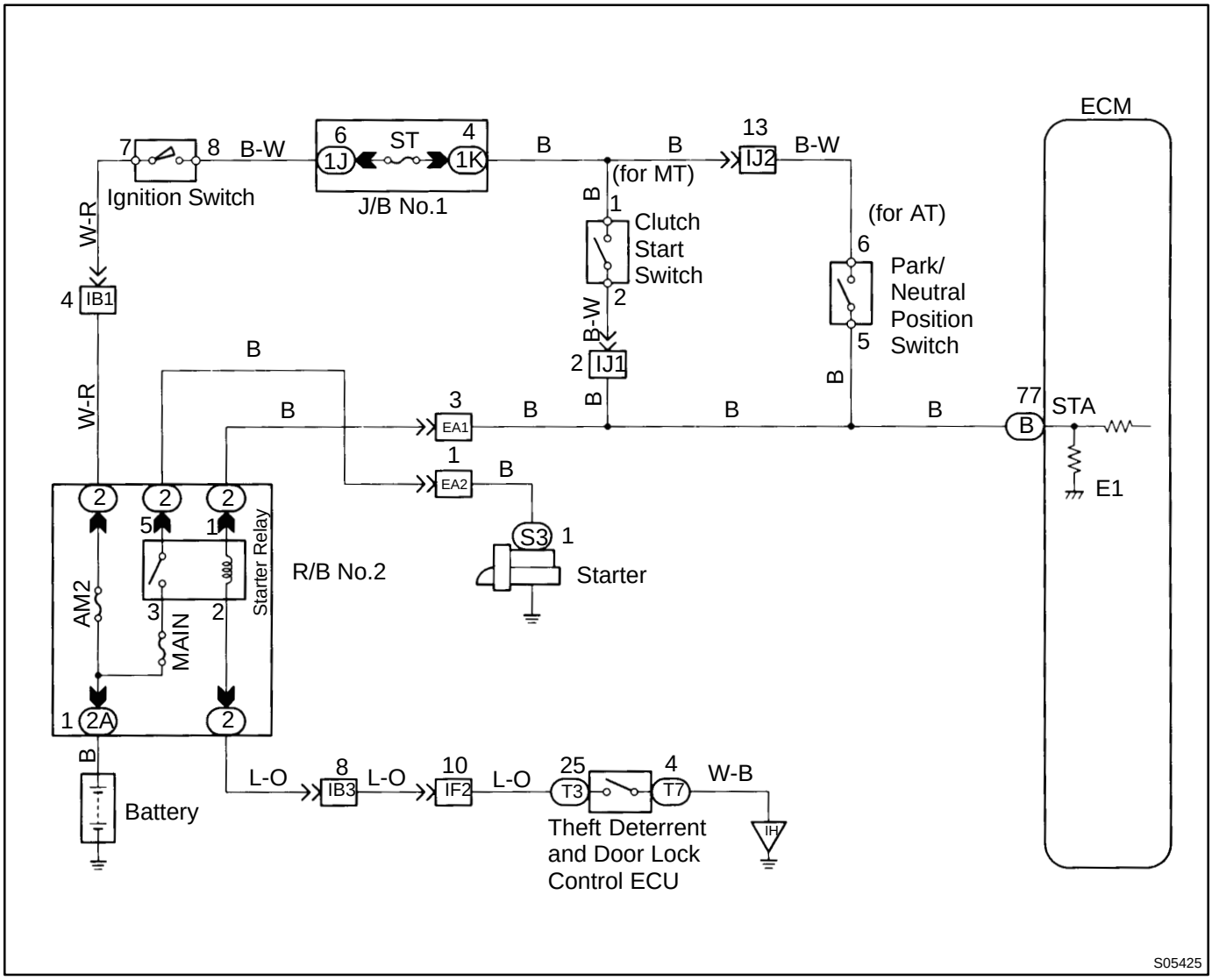

INSPECTION PROCEDURE

HINT:

This diagnostic chart is based on the premise that the engine is cranked normally. If the engine is not cranked, proceed to the matrix chart of problem symptoms on page DI-169 .

TOYOTA hand-held tester

1	**Connect the TOYOTA hand-held tester and check STA signal.**

PREPARATION:

(a) Connect the TOYOTA hand-held tester to the DLC3.

(b) Turn ignition switch ON and push TOYOTA hand-held tester main switch ON.

CHECK:

Read STA signal on the TOYOTA hand-held tester while starter operates.

Ignition Switch Position	ON	START
STA Signal	OFF	ON

OK → **Proceed to next circuit inspection shown on matrix chart (See page DI-169).**

NG

2	**Check for open in harness and connector between ECM and starter relay (See page IN-28).**

NG → **Repair or replace harness or connector.**

OK

Check and replace ECM (See page IN-28).

OBDII scan tool (excluding TOYOTA hand-held tester)

1	**Check voltage between terminal STA of ECM connector and body ground.**

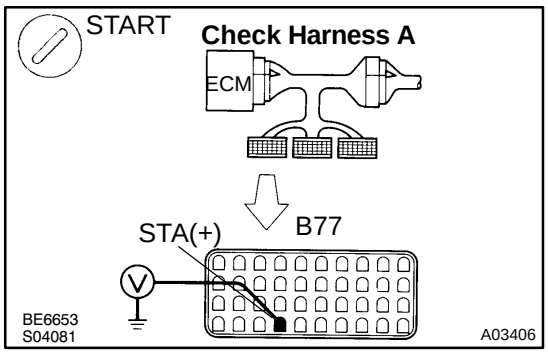

PREPARATION:

Connect Check Harness A (See page DI-164).

CHECK:

Measure voltage between terminal STA of ECM connector and body ground, during engine cranking.

OK:

Voltage: 6.0 V or more

OK → **Proceed to next circuit inspection shown on matrix chart (See page DI-169).**

NG

2	**Check for open in harness and connector between ECM and starter relay (See page IN-28).**

NG → **Repair or replace harness or connector.**

OK

Check and replace ECM (See page IN-28).

DI4TU-01

ECM Power Source Circuit

CIRCUIT DESCRIPTION

When the ignition switch is turned ON, battery positive voltage is applied to the coil, closing the contacts of the EFI main relay (Marking: EFI) and supplying power to the terminals +B of the ECM.

WIRING DIAGRAM

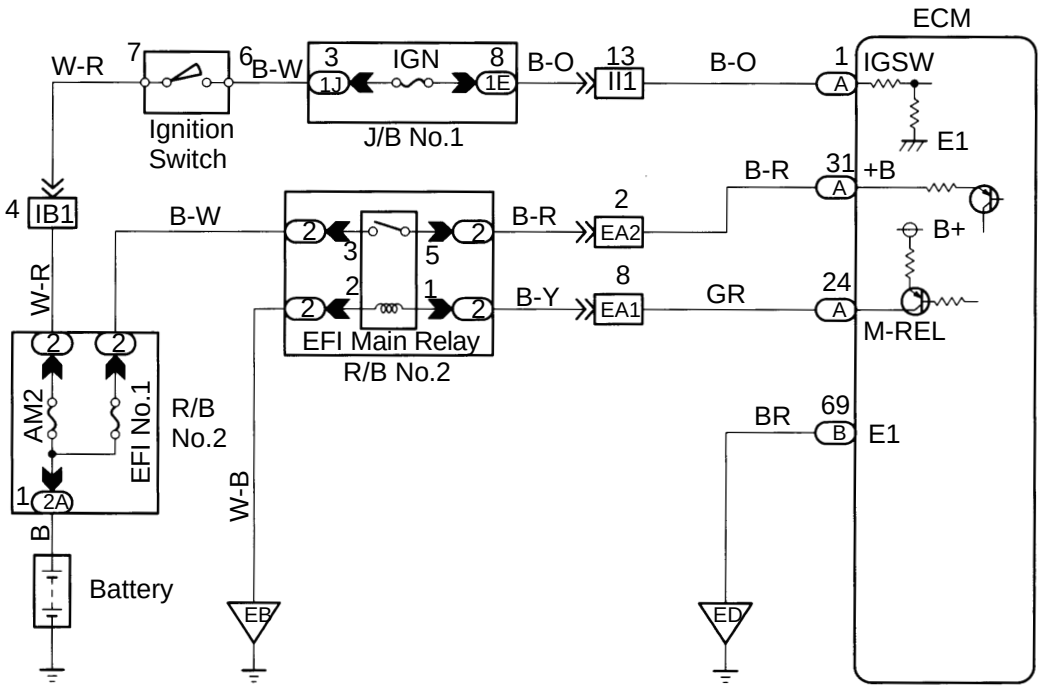

S03470

INSPECTION PROCEDURE

1	**Check voltage between terminals +B and E1 of ECM connector.**

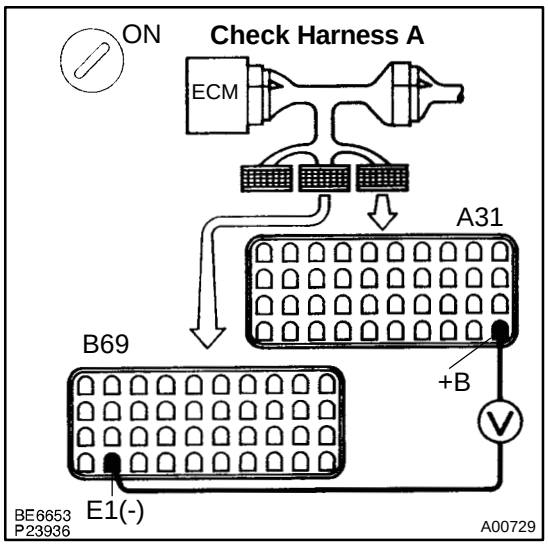

PREPARATION:

(a) Connect Check Harness A (See page DI-164).

(b) Turn ignition switch ON.

CHECK:

Measure voltage between terminals +B and E1 of ECM connector.

OK:

Voltage: 9 - 14 V

OK	**Proceed to next circuit inspection shown on matrix chart (See page DI-169).**

NG

2	**Check for open in harness and connector between terminal E1 of ECM connector and body ground (See page IN-28).**

NG	**Repair or replace harness or connector.**

OK

3	Check voltage between terminal IGSW of ECM connector and body ground.

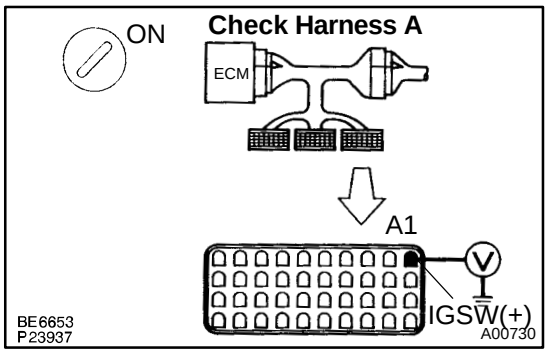

PREPARATION:
Turn ignition switch ON.
CHECK:
Measure voltage between terminal IGSW of ECM and body ground.
OK:
Voltage: 9 - 14 V

OK	Go to step 6.

NG

4	Check IGN fuse.

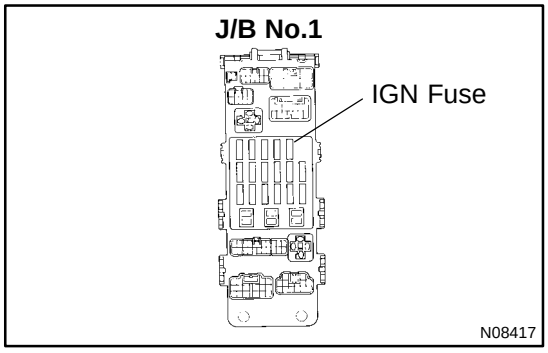

PREPARATION:
Remove IGN fuse from J/B No.1.
CHECK:
Check continuity of IGN fuse.
OK:
Continuity

NG	Check for short in all the harness and components connected to IGN fuse.

OK

5	**Check ignition switch (See page BE-13).**

NG → **Replace ignition switch.**

OK

Check for open and short in harness and connector between battery and ignition switch, ignition switch and ECM (See page IN-28).

6	**Check voltage between terminal M-REL of ECM connector and body ground.**

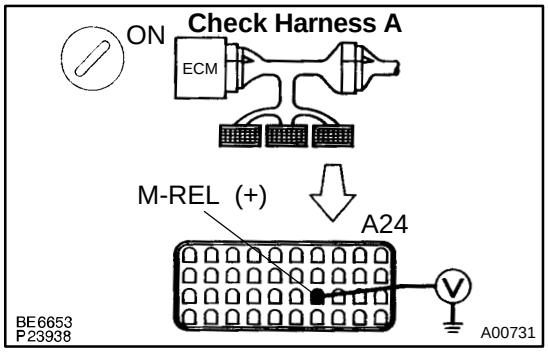

PREPARATION:
Turn ignition switch ON.
CHECK:
Measure voltage between terminal M-REL of ECM and body ground.
OK:
Voltage: 9 - 14 V

NG → **Check and replace ECM.**

OK

7	**Check EFI fuse (See page DI-284).**

NG → **Check for short in all the harness and components connected to EFI fuse.**

OK

8	Check EFI main relay (Marking: EFI MAIN) (See page SF-54).

NG → Replace EFI main relay (Marking: EFI MAIN).

OK

9	Check for open and short in harness and connector between terminal M-REL of ECM connector and body ground (See page IN-28).

NG → Repair or replace harness or connector.

OK

Check for open and short in harness and connector between terminal +B of ECM connector and battery (See page IN-28).

DI4TV-01

Fuel Pressure Control Circuit

CIRCUIT DESCRIPTION

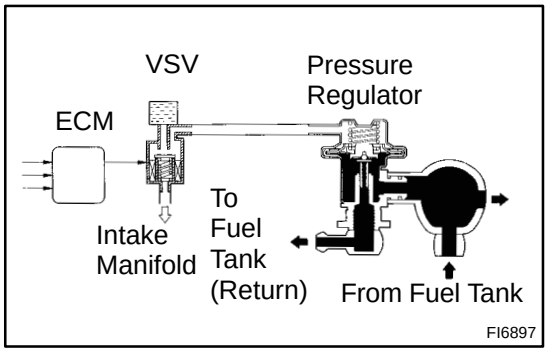

The ECM turns on a VSV (Vacuum Switching Valve) to draw the air into the diaphragm chamber of the pressure regulator if it detects that the temperature of the engine coolant is too high during engine staring.
The air drawn into the chamber increases the fuel pressure to prevent fuel vapor lock at high engine temperature in order to help the engine start when it is warm.
Fuel pressure control ends approx. 120 sec. after the engine is started.

WIRING DIAGRAM

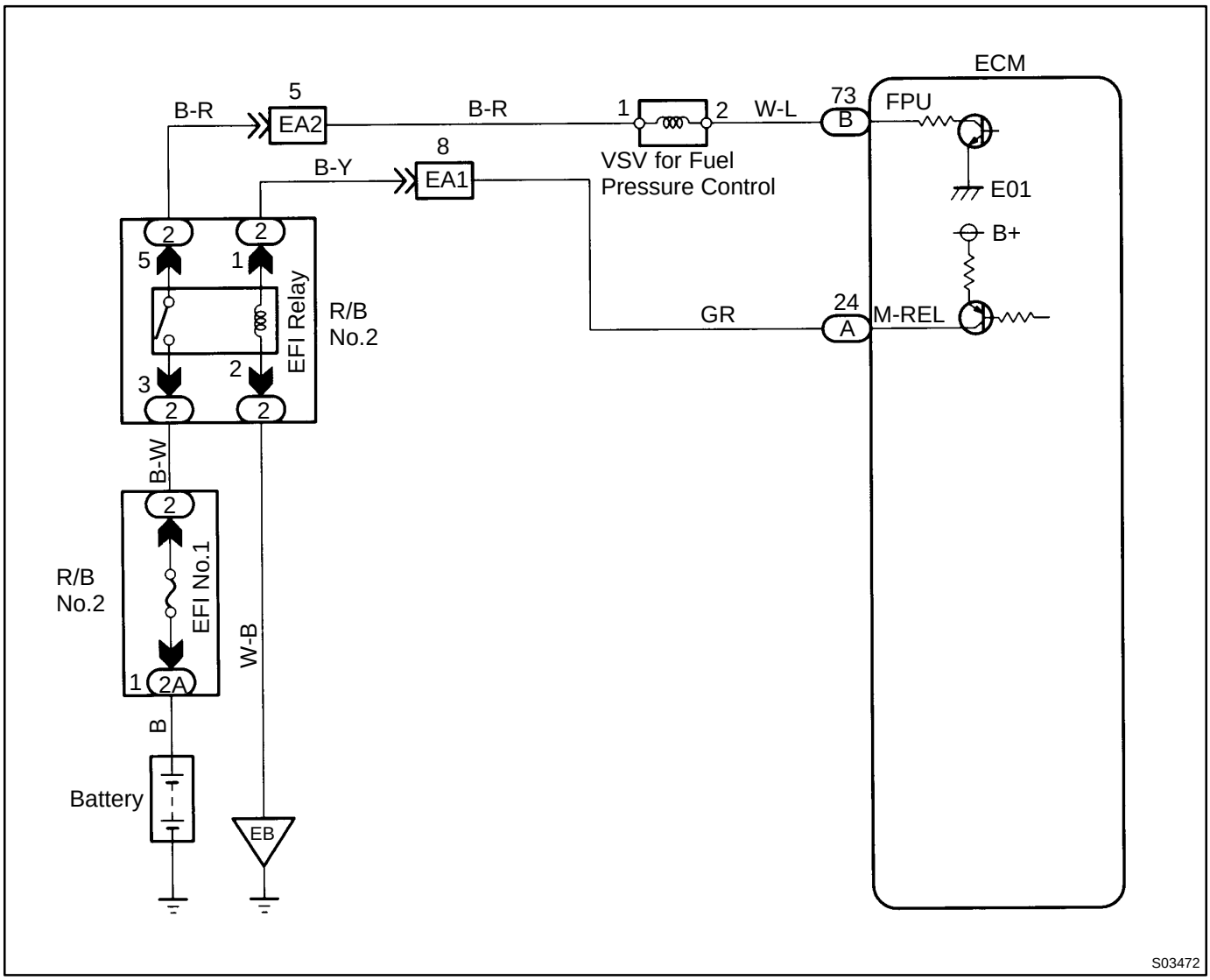

INSPECTION PROCEDURE

TOYOTA hand-held tester

1	**Connect the TOYOTA hand-held tester and check operation of VSV for fuel pressure control.**

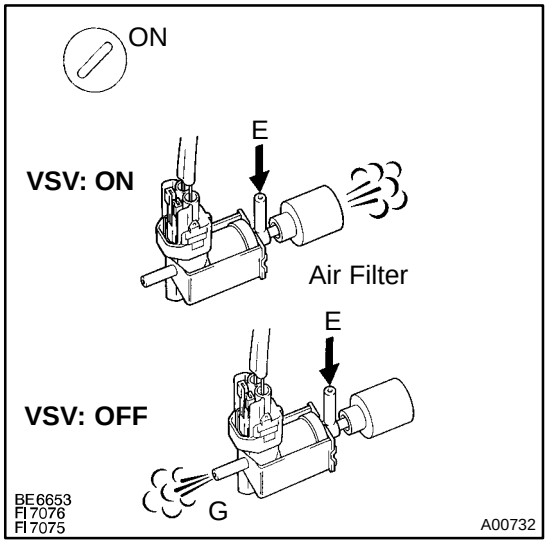

PREPARATION:

(a) Connect the TOYOTA hand-held tester to the DLC3.
(b) Turn ignition switch ON and TOYOTA hand-held tester main switch ON.
(c) Select the ACTIVE TEST mode on the TOYOTA hand-held tester.

CHECK:

Check operation of VSV when VSV is operated by the TOYOTA hand-held tester.

OK:

VSV is ON:
Air from pipe E flows out through the air filter.
VSV is OFF:
Air from pipe E flows out through pipe G.

OK → **Check and repair fuel pressure regulator (See page SF-1).**

NG

2	**Check VSV for fuel pressure control (See page SF-59).**

NG → **Replace VSV for fuel pressure control.**

OK

3	**Check for open and short in harness and connector between EFI main relay (Marking: EFI MAIN) and ECM (See page IN-28).**

NG → **Repair or replace harness or connector.**

OK

Check and replace ECM (See page IN-28).

OBDII scan tool (excluding TOYOTA hand-held tester)

1	**Check VSV for fuel pressure control (See page SF-59).**

NG → **Replace VSV for fuel pressure control.**

OK

2	**Check voltage between terminal FPU of ECM connector and body ground.**

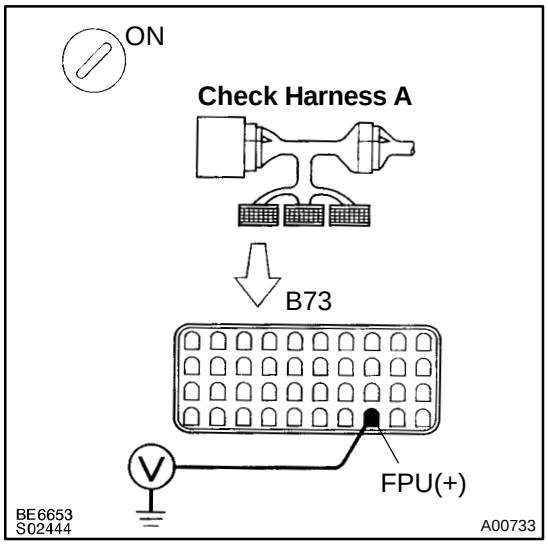

PREPARATION:

(a) Connect Check Harness A (See page DI-164).

(b) Turn ignition switch ON.

CHECK:

Measure voltage between terminal FPU of ECM connector and body ground.

OK:

Voltage: 9 - 14 V

NG → **Check for open and short in harness and connector between EFI main relay (Marking: EFI MAIN) and ECM (See page IN-28).**

OK

3	Check fuel pressure regulator (See page SF-1).

NG → Repair or replace.

OK →

Check and replace ECM (See page IN-28).

DI4TW-01

A/C Cut Control Circuit

CIRCUIT DESCRIPTION

This circuit cuts air conditioning operation during vehicle acceleration in order to increase acceleration performance. During acceleration with the vehicle speed at 25 km/h (16 mph) or less, engine speed at 1,200 rpm or less and throttle valve opening angle at 60° or more, the A/C magnet switch is turned OFF for several seconds.

WIRING DIAGRAM

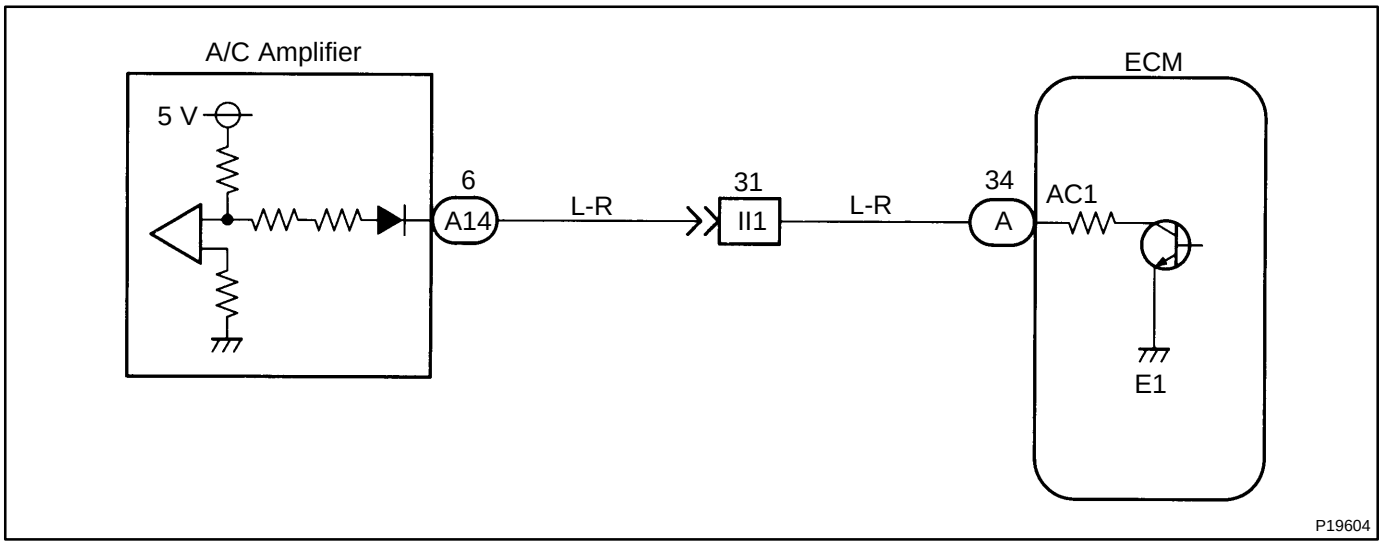

INSPECTION PROCEDURE

TOYOTA hand-held tester

1	**Connect the TOYOTA hand-held tester and check operation of air conditioning cut control.**

PREPARATION:

(a) Connect the TOYOTA hand-held tester to the DLC3.
(b) Turn ignition switch ON and push TOYOTA hand-held tester main switch ON.
(c) Start the engine and air conditioning switch ON.

HINT:

A/C magnetic clutch is turned ON.

(d) Select the ACTIVE TEST mode on the TOYOTA hand-held tester.

CHECK:

Check operation of A/C magnetic clutch cut when air conditioning cut control is operated by the TOYOTA hand-held tester.

OK:

A/C magnetic clutch is turned OFF.

OK → **Proceed to next circuit inspection shown on matrix chart (See page DI-169).**

NG

2	**Check for open and short in harness and connector between ECM and A/C amplifier (See page IN-28).**

NG → **Repair or replace harness or connector.**

OK

3	**Check voltage between terminal AC1 of ECM connector and body ground.**

Check Harness A

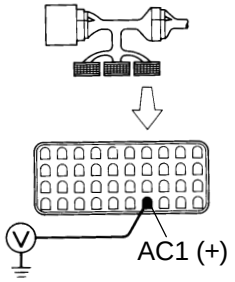

S03240

PREPARATION:

(a) Connect Check Harness A (See page DI-164).

(b) Start the engine.

CHECK:

Measure voltage between terminal AC1 of ECM connector and body ground when A/C switch is turned to ON and OFF.

OK:

A/C Switch Condition	Voltage
ON	0 - 1.5 V
OFF	7.5 - 14 V

NG → **Check and replace A/C amplifier.**

OK

Check and replace ECM (See page IN-28).

OBDII scan tool (excluding TOYOTA hand-held tester)

1	Check voltage between terminal AC1 of ECM and body ground (See page DI-313 , step 3).

OK → Check and replace ECM (See page IN-28).

NG

2	Check for open and short in harness and connector between ECM and A/C amplifier (See page IN-28).

NG → Repair or replace harness or connector.

OK

Check and replace A/C amplifier.

ANTI-LOCK BRAKE SYSTEM

DI4V4-01

HOW TO PROCEED WITH TROUBLESHOOTING

Troubleshooting in accordance with the procedure on the following pages.

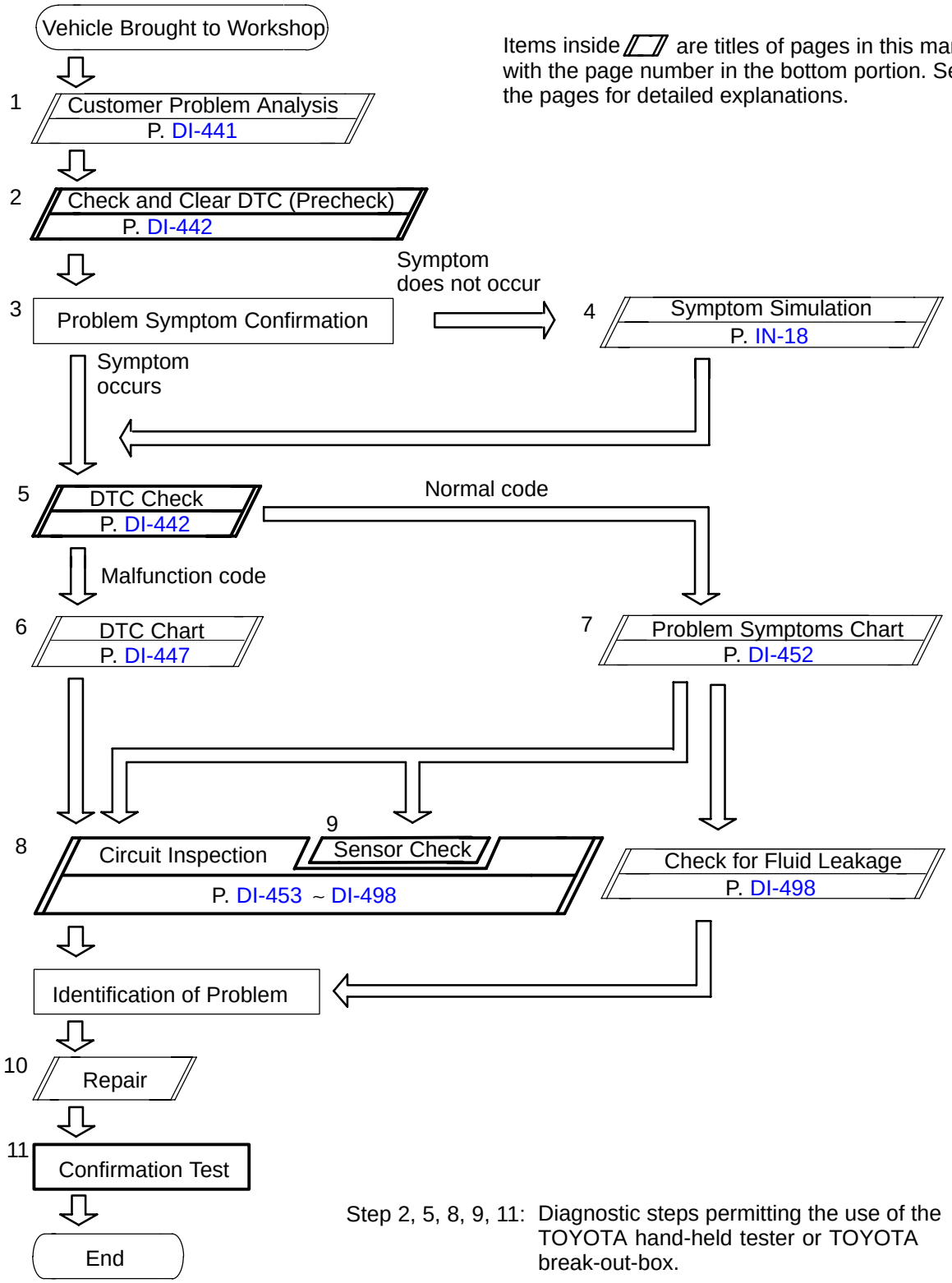

Items inside ▱ are titles of pages in this manual, with the page number in the bottom portion. See the pages for detailed explanations.

Step 2, 5, 8, 9, 11: Diagnostic steps permitting the use of the TOYOTA hand-held tester or TOYOTA break-out-box.

DI4V5-01

CUSTOMER PROBLEM ANALYSIS CHECK

ABS Check Sheet

Inspector's Name :

Customer's Name		**Registration No.**	
		Registration Year	/ /
		Frame No.	
Date Vehicle Brought In	/ /	**Odometer Reading**	km miles

Date Problem First Occurred	/ /
Frequency Problem Occurs	☐ Continuous ☐ Intermittent (times a day)

Symptoms	☐ ABS does not operate.	
	☐ ABS does not operate efficiently.	
	ABS Warning Light Abnormal	☐ Remains ON ☐ Does not Light Up

Check Item	**TRAC Indicator Light**	☐ Normal ☐ Does not Light Up

DTC Check	**1st Time**	☐ Normal Code ☐ Malfunction Code (Code)
	2nd Time	☐ Normal Code ☐ Malfunction Code (Code)

DI4V6-01

PRE-CHECK

1. DIAGNOSIS SYSTEM

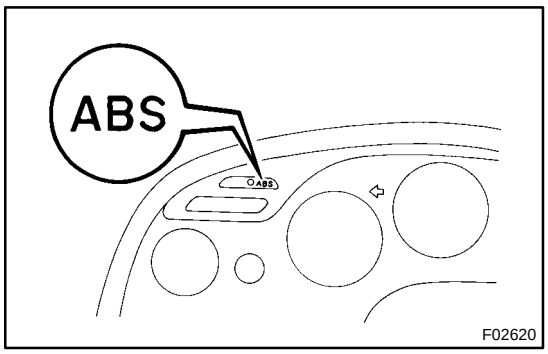

(a) Check the Indicator,
When the ignition switch is turned ON, check that the ABS warning light goes on for 3 seconds.

HINT:
If the indicator check result is not normal, proceed to trouble-shooting for the ABS warning light circuit (See page DI-488).

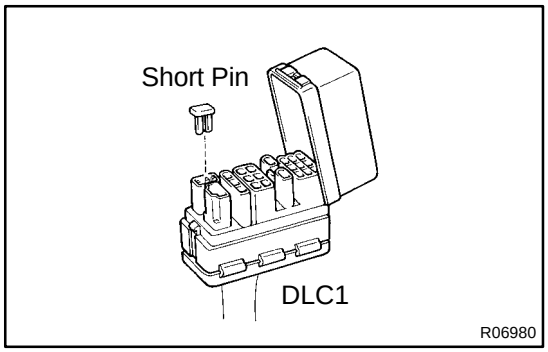

(b) Check the DTC.
(1) Turn the ignition switch ON.
(2) Disconnect the short pin from DLC1.

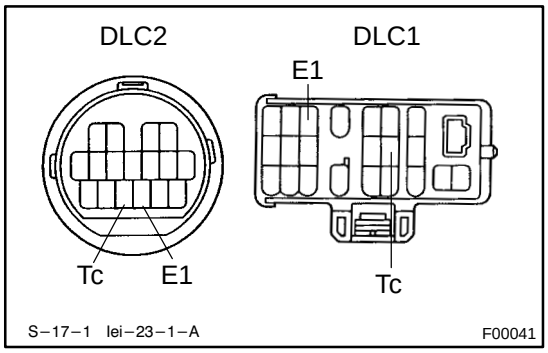

(3) Using SST, connect terminals Tc and E1 of DLC2 or DLC1.
SST 09843-18020
(4) Read the DTC from the ABS warning light on the combination meter.

HINT:
If no code appears, inspect the diagnostic circuit or ABS warning light circuit (See page DI-494 or DI-488).

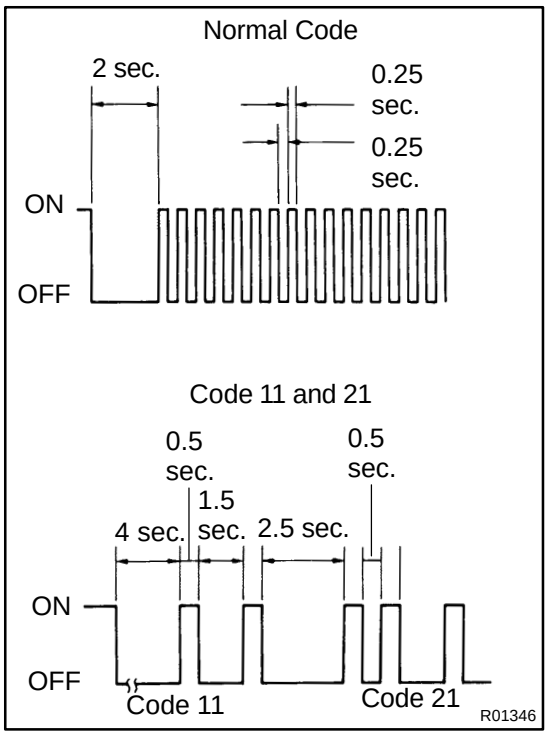

As an example, the blinking patterns for normal code and codes 11 and 21 are shown on the left.
(5) Codes are explained in the code table on page DI-447 .
(6) After completing the check, disconnect terminals Tc and E1, and turn off the display.

If 2 or more malfunctions are indicated at the same time, the lowest numbered DTC will be displayed 1st.

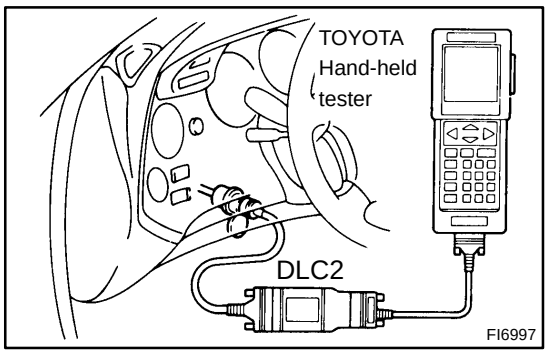

(c) Using TOYOTA hand-held tester, check the DTC.
(1) Hook up the TOYOTA hand- held tester to the DLC2.
(2) Read the DTC by following the prompts on the tester screen.
Please refer to the TOYOTA hand-held tester operator's manual for further details.

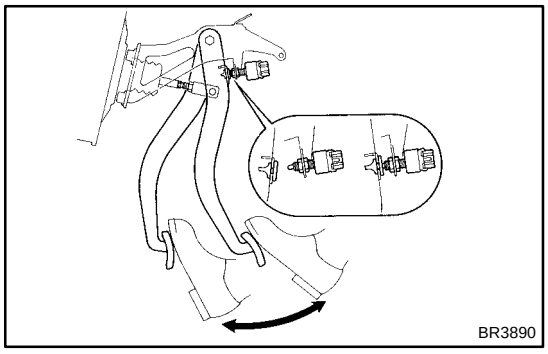

(d) Clear the DTC.
(1) Using SST, connect terminals Tc and E1 of DLC2 or DLC1 and remove the short pin from DLC1.
SST 09843-18020
(2) IG switch ON.
(3) Clear the DTC stored in ECU by depressing the brake pedal 8 or more times within 5 seconds.
(4) Check that the warning light shows the normal code.

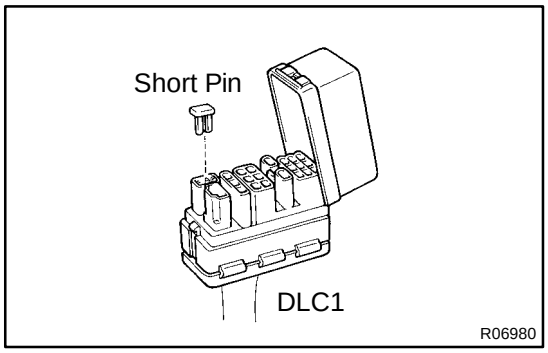

(5) Remove the SST from the terminals of DLC2 or DLC1.
SST 09843-18020
(6) Connect the short pin to DLC1.

HINT:
Disconnecting the battery cable during repairs will not erase the DTC in the ECU.

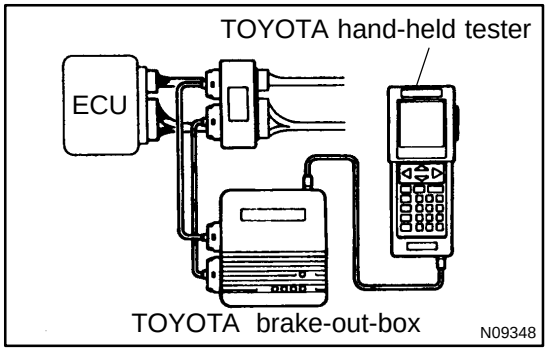

(e) Using TOYOTA brake-out-box and TOYOTA hand-held tester, measure the ECU terminal values.
(1) Turn the IG switch OFF.
(2) Hook up the TOYOTA hand-held tester and TOYOTA break-out-box to the vehicle.
(3) Turn the IG switch ON.
(4) Read the ECU input/output values by following the prompts on the tester screen.

HINT:
TOYOTA hand-held tester has a "Snapshot" function.
This records the measured values and is effective in the diagnosis of intermittent problems.
Please refer to the TOYOTA hand-held tester/TOYOTA break-out-box operator's manual for further details.

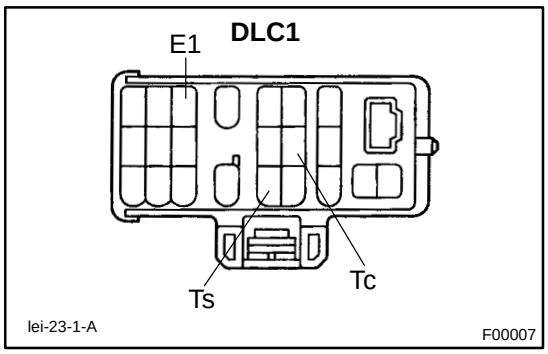

2. SPEED SENSOR SIGNAL AND DECELERATION SENSOR

(a) Check the speed sensor signal and deceleration sensor.

(1) Turn the ignition switch OFF

(2) Using SST, connect terminal Ts and E1 of DLC1.

SST 09843-18020

(3) Start the engine.

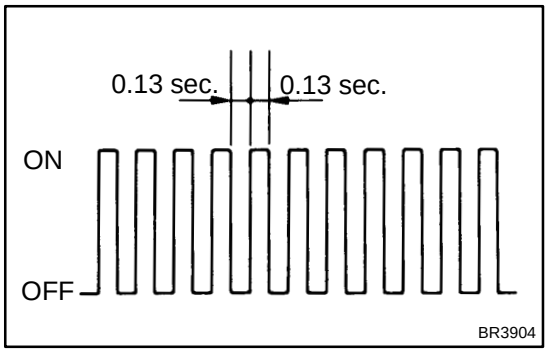

(4) Check that the ABS warning light blinks.

HINT:

- If the ABS warning light does not blink, inspect the ABS warning light circuit (See page DI-488).
- If the ABS warning light is always on, inspect and repair, deceleration sensor.

(5) Drive the vehicle faster than 45 km/h (28 mph) for several seconds.

(6) Stop the vehicle.

(7) Using SST, connect terminals Tc an E1 of DLC1.

SST 09843-18020

(8) Read the number of blinks of the ABS warning light.

HINT:

- See the list of DTC shown on the next page.
- If every sensor is normal, a normal code is output (A cycle of 0.25 sec. ON and 0.25 sec. OFF is repeated).
- If 2 or more malfunctions are indicated at the same time, the lowest numbered code will be displayed 1st.

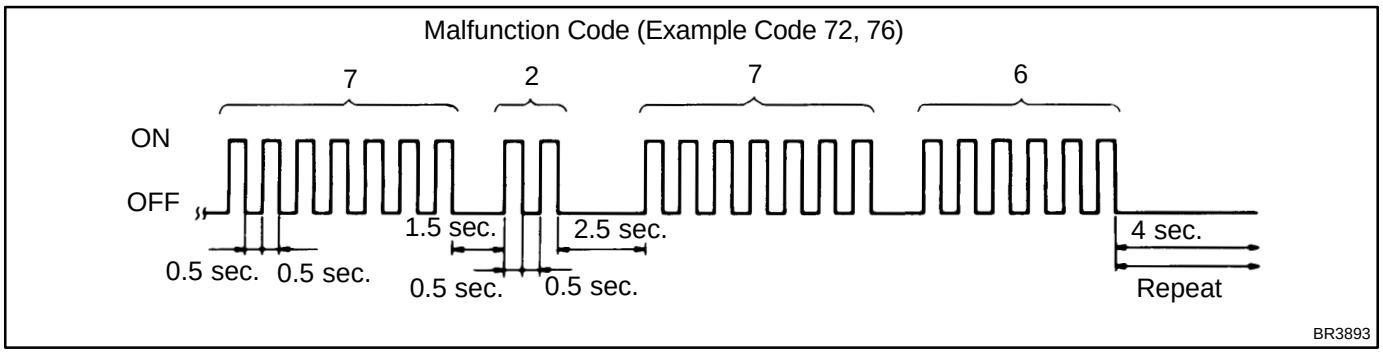

(9) After doing the check, disconnect terminals Ts and E1, Tc and E1 of DLC1, and turn ignition switch OFF.

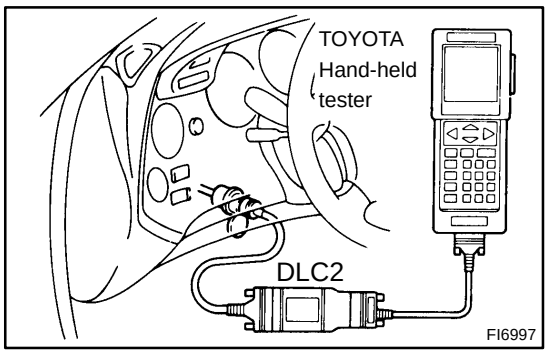

(b) Using TOYOTA hand-held tester, check the DTC.
(1) Do step (1) - (6) on the previous page.
(2) Hook up the TOYOTA hand- held tester to the DLC2.
(3) Read the DTC by following the prompts on the tester screen.
Please refer to the TOYOTA hand-held tester operator's manual for farther details.

DTC of speed sensor check function:

Code No.	Diagnosis	Trouble Area
71	Low output voltage of right front speed sensor	□Right front speed sensor □Sensor installation □Sensor Rotor
72	Low output voltage of left front speed sensor	□Left front speed sensor □Sensor installation □Sensor Rotor
73	Low output voltage of right rear speed sensor	□Right rear speed sensor □Sensor installation □Sensor Rotor
74	Low output voltage of left rear speed sensor	□Left rear speed sensor □Sensor installation □Sensor Rotor
75	Abnormal change in output voltage of right front speed sensor	□Right front speed sensor rotor
76	Abnormal change in output voltage of left front speed sensor	□Left front speed sensor rotor
77	Abnormal change in output voltage of right rear speed sensor	□Right rear speed sensor rotor
78	Abnormal change in output voltage of left rear speed sensor	□Left rear speed sensor rotor
79*	Deceleration sensor is faulty	□Deceleration sensor □Sensor installation

*: SPORT ABS (2JZ-GTE Engine) only

3. DECELERATION SENSOR OPERATION DIAGNOSIS SYSTEM

CAUTION:

While checking the deceleration sensor operating diagnosis system, the Anti-lock Brake System does not work and brake system works as a conventional brake system.

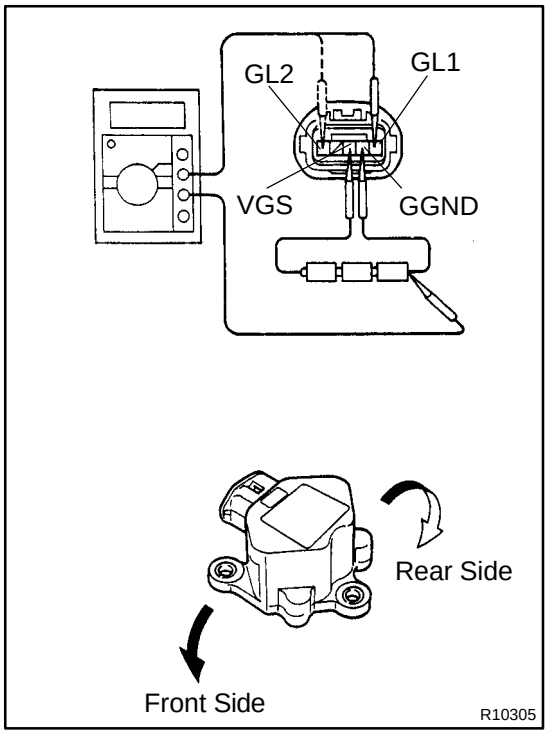

(a) Deceleration sensor inspection check of deceleration sensor output:

(1) Connect 3 dry batteries of 1.5 V in series.

(2) Connect VGS terminal to the batteries' positive (+) terminal, and GGND terminal to the batteries' negative (-) terminal, apply about 4.5 V between VGS-GGND terminals.

NOTICE:

Do not apply voltage of 6 V or more to terminals VGS and GGND.

(3) Check the output of GL1 and GL2 terminals.

Symbols	Condition	Standard Value
GL1	Horizontal	about 2.3 V
GL1	Lean forward	0.4 - about 2.3 V
GL1	Lean rearward	about 2.3 V - 4.1 V
GL2	Horizontal	about 2.3 V
GL2	Lean forward	about 2.3 V - 4.1 V
GL2	Lean rearward	0.4 - about 2.3 V

HINT:

- If the senor is tilted too much it may show the wrong value.
- If dropped, the sensor should be replaced with a new one.
- The sensor removed from the vehicle should not be placed upside down.

DI4V7-01

DIAGNOSTIC TROUBLE CODE CHART

If a malfunction code is displayed during the DTC check, check the circuit listed for that code. For details of each code, turn to the page referred to under the "See page" for the respective "DTC No." in the DTC chart.
HINT:

- Using SST 09843-18020, connect the terminals Tc and E1, and remove the short pin.
- If any abnormality is not found when inspect each inspection parts, inspect the ECU.

DTC No. (See Page)	Detection Item	Trouble Area
11 (DI-453)	Open circuit in ABS solenoid relay circuit	ABS solenoid relay Open or short in ABS solenoid relay circuit
12 (DI-453)	Short circuit in ABS solenoid relay circuit	ABS solenoid relay B+ short in ABS solenoid relay circuit
13*2 (DI-460)	Open circuit in ABS motor relay circuit	ABS motor relay Open or short in ABS motor relay circuit
14 (DI-460)	Short circuit in ABS motor relay circuit	ABS motor relay B+ short in ABS motor relay circuit
21 (DI-466)	Open or short circuit in 2-position solenoid circuit for right front wheel	ABS actuator Open or short in SFRH or SFRR circuit
22 (DI-466)	Open or short circuit in 2-position solenoid circuit for left front wheel	ABS actuator Open or short in SFLH or SFLR circuit
23 (DI-466)	Open or short circuit in 2-position solenoid circuit for right rear wheel	ABS actuator Open or short in SRH (SRRH) or SRR (SRRR) circuit
24*1 (DI-466)	Open or short circuit in 2-position solenoid circuit for left rear wheel	ABS actuator Open or short in SRLH or SRLR circuit
31*2 (DI-469)	Right front wheel speed sensor signal malfunction	Right front, left front, right rear and left rear speed sensor Open or short in each speed sensor circuit Speed sensor rotor
32*2 (DI-469)	Left front wheel speed sensor signal malfunction	
33*2 (DI-469)	Right rear wheel speed sensor signal malfunction	
34*2 (DI-469)	Left rear wheel speed sensor signal malfunction	
41 (DI-475)	Low battery positive voltage	Battery IC regulator Open or short in power source circuit
43*1 (DI-479)	Malfunction in deceleration sensor (constant output)	Deceleration sensor Wire harness for deceleration sensor system
44*1 (DI-480)	Open or short in deceleration sensor circuit	Deceleration sensor Open or short in deceleration sensor circuit
45*1 (DI-479)	Malfunction in deceleration sensor	Deceleration sensor Wire harness for deceleration sensor system
49 (DI-482)	Open circuit in stop light switch circuit	Open in stop light circuit
51*2 (DI-484)	Pump motor is locked Open in pump motor ground	ABS pump motor
Always ON (DI-485)	Malfunction in ECU IG power source circuit	Battery IC regulator Open or short in power source circuit

*1: Short ABS (2JZ-GTE Engine) only
*2: As DTC cannot be erased by replacing parts alone, do either of the following operations.
- ☐ Clear DTC (See page DI-442).
- ☐ At the vehicle speed of 20 km/h (12 mph), drive the vehicle for 30 sec. or more.

DI4V8-01

PARTS LOCATION

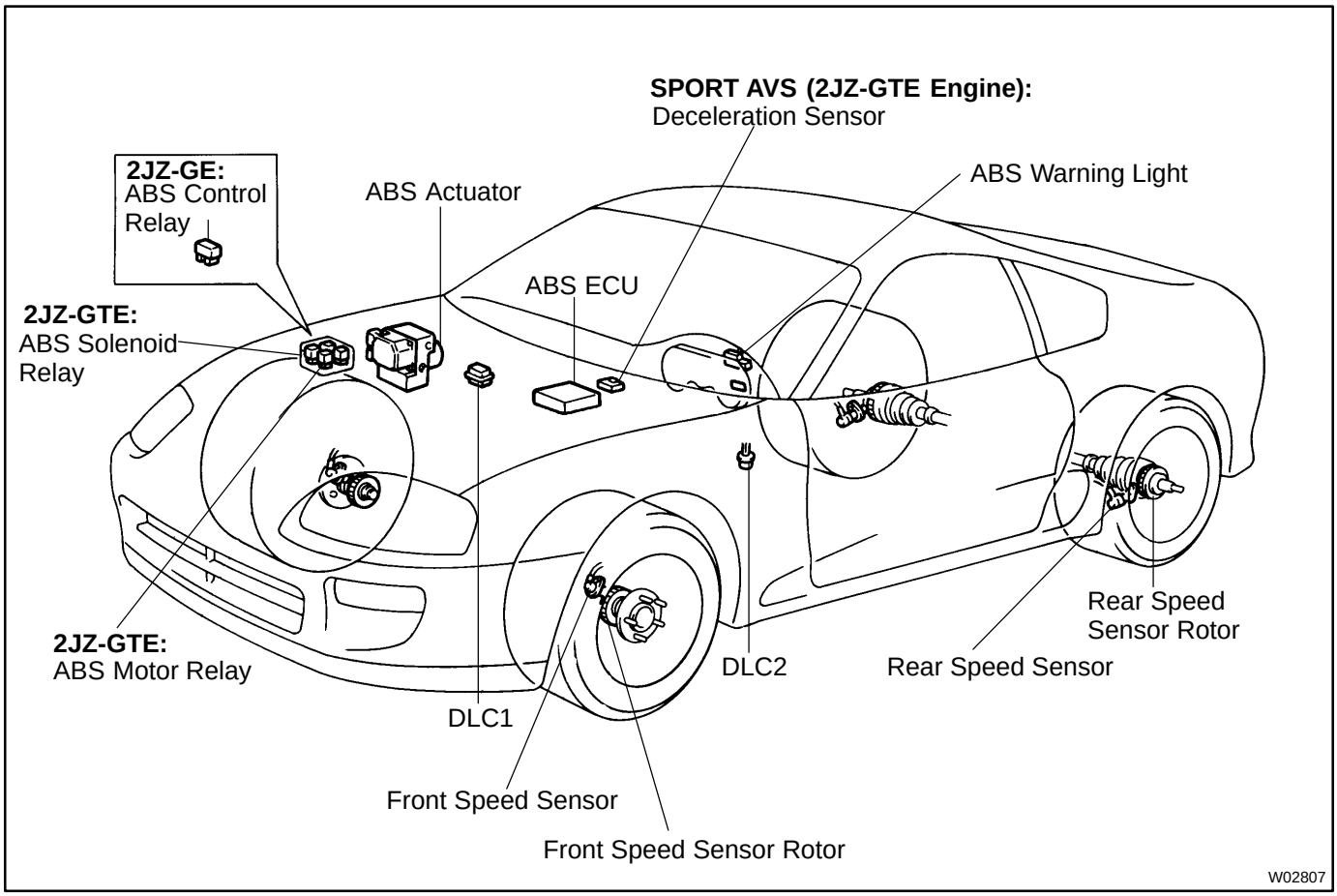

DI7HM-01

TERMINALS OF ECU

NORMAL ABS (2JZ-GE Engine):

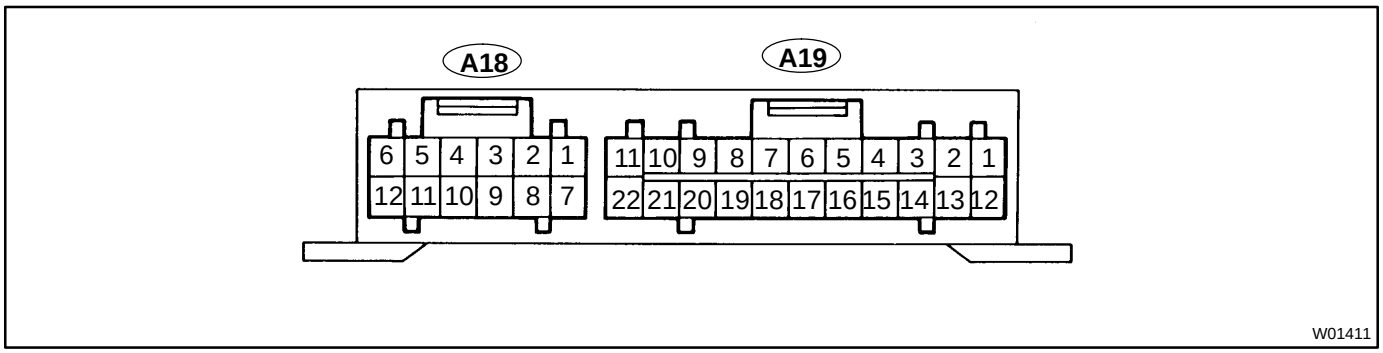

Symbols (Terminal No.)	STD Voltage (V)	Condition
IG1 (A18-2) - GND (A19-2,13)	10 - 14	IG switch ON
SR (A19-18) - R+ (A19-8)	Below 1.5	IG switch ON, ABS warning light OFF
MR (A19-7) - R+ (A19-8)	10 - 14	IG switch ON
SFRH (A19-4) - GND (A19-2,13)	10 - 14	IG switch ON, ABS warning light OFF
SFRR (A19-1) - GND (A19-2,13)	10 - 14	IG switch ON, ABS warning light OFF
SFLH (A19-10) - GND (A19-2,13)	10 - 14	IG switch ON, ABS warning light OFF
SFLR (A19-11) - GND (A19-2,13)	10 - 14	IG switch ON, ABS warning light OFF
SRR (A19-22) - GND (A19-2,13)	10 - 14	IG switch ON, ABS warning light OFF
SRH (A19-21) - GND (A19-2,13)	10 - 14	IG switch ON, ABS warning light OFF
AST (A19-16) - GND (A19-2,13)	10 - 14	IG switch ON, ABS warning light OFF
WA (A18-4) - GND (A19-2,13)	Below 2.0	IG switch ON, ABS warning light ON
	10 - 14	IG switch ON, ABS warning light OFF
STP (A18-12) - GND (A19-2,13)	Below 1.5	Stop light switch OFF
	8 - 14	Stop light switch ON
D/G (A18-11) - GND (A19-2,13)	10 - 14	IG switch ON, ABS warning light OFF
MT (A19-9) - GND (A19-2,13)	Below 1.5	IG switch ON
Tc (A18-9) - GND (A19-2,13)	10 - 14	IG switch ON
Ts (A18-8) - GND (A19-2,13)	10 - 14	IG switch ON
FR+ (A19-3) - FR- (A19-14)	AC generation	IG switch ON Slowly turn right front wheel
FL+ (A19-19) - FL- (A19-20)	AC generation	IG switch ON Slowly turn left front wheel
RR+ (A18-1) - RR- (A18-7)	AC generation	IG switch ON Slowly turn right rear wheel
RL+ (A18-3) - RL- (A18-10)	AC generation	IG switch ON Slowly turn left rear wheel

Sport ABS (2JZ-GTE Engine):

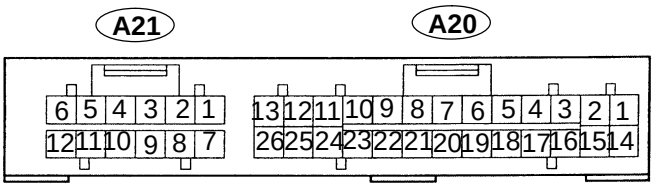

W02803

Symbols (Terminal No.)	STD Voltage (V)	Condition
IG1 (A20-13) - GND (A20-12,25)	10 - 14	IG switch ON
SR (A21-7) - R+ (A20-26)	10 - 14	IG switch ON, ABS warning light OFF
MR (A21-1) - R+ (A20-26)	Below 1.0	IG switch ON
SFRH (A20-2) - GND (A20-12,25)	10 - 14	IG switch ON, ABS warning light OFF
SFRR (A20-1) - GND (A20-12,25)	10 - 14	IG switch ON, ABS warning light OFF
SFLH (A21-5) - GND (A20-12,25)	10 - 14	IG switch ON, ABS warning light OFF
SFLR (A21-6) - GND (A20-12,25)	10 - 14	IG switch ON, ABS warning light OFF
SRRH (A21-11) - GND (A20-12,25)	10 - 14	IG switch ON, ABS warning light OFF
SRRR (A21-12) - GND (A20-12,25)	10 - 14	IG switch ON, ABS warning light OFF
SRLH (A20-15) - GND (A20-12,25)	10 - 14	IG switch ON, ABS warning light OFF
SRLR (A20-14) - GND (A20-12,25)	10 - 14	IG switch ON, ABS warning light OFF
AST (A21-4) - GND (A20-12,25)	10 - 14	IG switch ON, ABS warning light OFF
WA (A20-11) - GND (A20-12,25)	Below 2.0	IG switch ON, ABS warning light ON
	10 - 14	IG switch ON, ABS warning light OFF
STP (A20-5) - GND (A20-12,25)	Below 1.5	Stop light switch OFF
	8 - 14	Stop light switch ON
D/G (A20-24) - GND (A20-12,25)	10 - 14	IG switch ON, ABS warning light OFF
MT (A21-10) - GND (A20-12,25)	Below 1.5	IG switch ON
Tc (A20-8) - GND (A20-12,25)	10 - 14	IG switch ON
Ts (A20-21) - GND (A20-12,25)	10 - 14	IG switch ON
FR+ (A21-3) - FR- (A21-9)	AC generation	IG switch ON Slowly turn right front wheel
FL+ (A21-8) - FL- (A21-2)	AC generation	IG switch ON Slowly turn left front wheel
RR+ (A20-10) - RR- (A20-23)	AC generation	IG switch ON Slowly turn right rear wheel
RL+ (A20-22) - RL- (A20-9)	AC generation	IG switch ON Slowly turn left rear wheel
FRO (A20-7) - GND (A20-12,25)	Pulse generation	Vehicle driving at about 30 km/h (19 mph)
FLO (A20-20) - GND (A20-12,25)	Pulse generation	Vehicle driving at about 30 km/h (19 mph)
RRO (A20-6) - GND (A20-12,25)	Pulse generation	Vehicle driving at about 30 km/h (19 mph)
RLO (A20-19) - GND (A20-12,25)	Pulse generation	Vehicle driving at about 30 km/h (19 mph)
GL1 (A20-4) - GND (A20-12,25)	0.5 - 4.5 V	IG switch ON
GL2 (A20-16) - GND (A20-12,25)	0.5 - 4.5 V	IG switch ON
VGS (A20-3) - GND (A20-12,25)	4.5 - 5.5 V	IG switch ON

DI4VA-01

PROBLEM SYMPTOMS TABLE

If a normal code is displayed during the DTC check but the problem still occurs, check the circuits for each problem symptom in the order given in the table below and proceed to the relevant troubleshooting page.

NOTICE:

When removing the ECU, turn the IG switch OFF.

Symptoms	Inspection Circuit	See page
ABS does not operate.	Only when 1. - 4. are all normal and the problem is still occurring, replace the ABS ECU. 1. Check the DTC, reconfirming that the normal code is output. 2. IG power source circuit. 3. Speed sensor circuit. 4. Check the ABS actuator with a checker. If abnormal, check the hydraulic circuit for leakage (See page DI-498).	 DI-442 DI-475 DI-469 BR-66 or XXX
ABS does not operate efficiently.	Only when 1. - 4. are all normal and the problem is still occurring, replace the ABS ECU. 1. Check the DTC, reconfirming that the normal code is output. 2. Speed sensor circuit. 3. Stop light switch circuit. 4. Check the ABS actuator with a checker. If abnormal, check the hydraulic circuit for leakage (See page DI-498).	 DI-442 DI-469 DI-482 BR-66 or BR-66
ABS warning light abnormal.	1. ABS warning light circuit. 2. ABS ECU.	DI-488
DTC check cannot be done.	Only when 1. and 2. are all normal and the problem is still occurring, replace the ABS ECU. 1. ABS warning light circuit. 2. Tc terminal circuit.	 DI-488 DI-494
Speed sensor signal check cannot be done.	1. Ts terminal circuit. 2. ABS ECU.	DI-496 XXX

DI4VB-01

CIRCUIT INSPECTION

DTC	11, 12	ABS Solenoid Relay Circuit

CIRCUIT DESCRIPTION

This relay supplies power to each ABS solenoid. After the ignition switch is turned ON, if the initial check is OK, the relay goes on.

DTC No.	DTC Detecting Condition	Trouble Area
11	Conditions (1) and (2) continue for 0.2 sec. or more: (1) ABS solenoid relay terminal (SR) voltage: Below 1.5V (2) Solenoid relay monitor terminal (AST) voltage: 0 V	□ ABS solenoid relay □ Open or short in ABS solenoid relay circuit
12	Conditions (1) and (2) continue for 0.2 sec. or more: (1) ABS solenoid relay terminal (SR) voltage: Battery positive voltage (2) Solenoid relay monitor terminal (AST) voltage: Battery positive voltage	□ ABS solenoid relay □ B+ short in ABS solenoid relay circuit

Fail safe function:

If trouble occurs in the ABS solenoid relay circuit, the ECU cuts off current to the ABS solenoid relay and prohibits ABS control.

WIRING DIAGRAM

2JZ-GE Engine (NORMAL ABS):

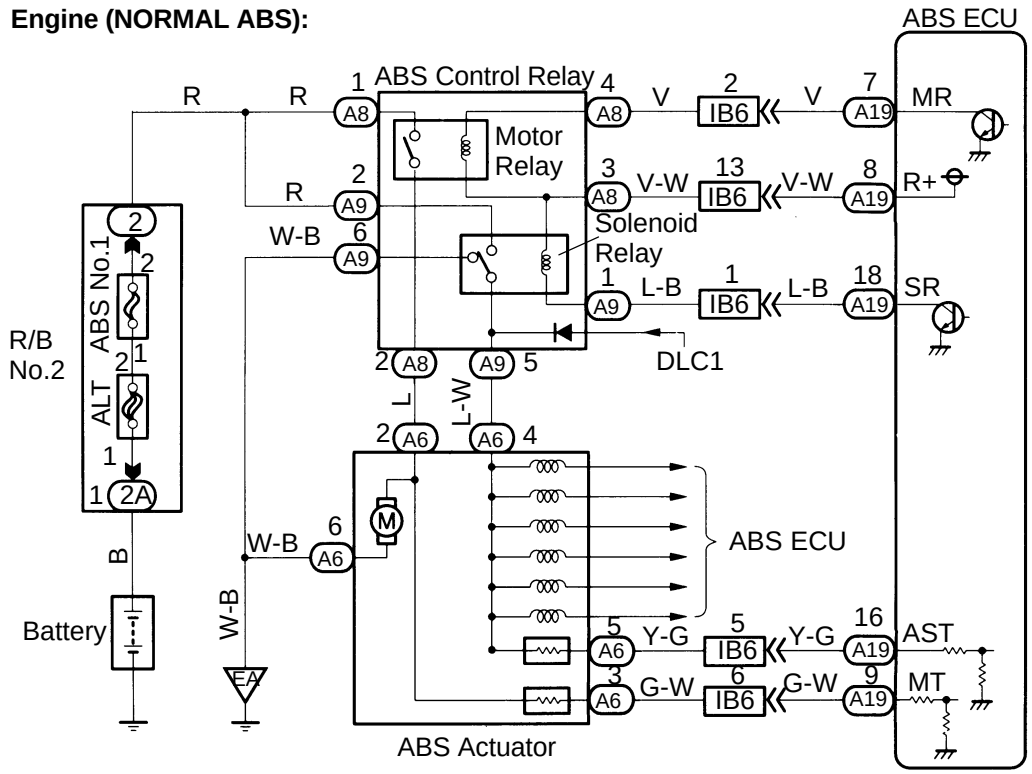

2JZ-GTE Engine (SPORT ABS):

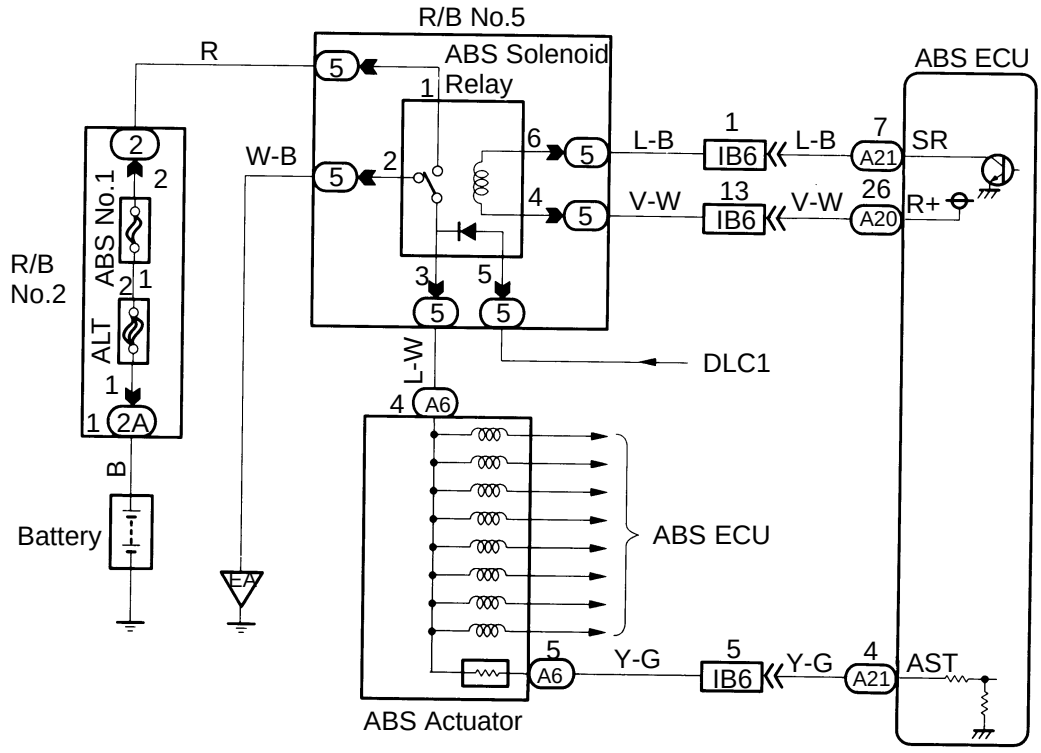

F02626
F02627

F02628

INSPECTION PROCEDURE (2JZ-GE Engine)

1	**Check voltage between terminals A9 - 2 and A9 - 6 of ABS control (solenoid) relay connector.**

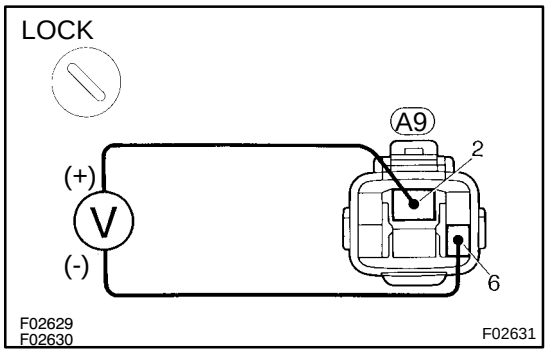

PREPARATION:
Disconnect the ABS control (solenoid) relay connector.
CHECK:
Measure voltage between terminals A9 - 2 and A9 - 6 of ABS control (solenoid) relay harness side connector.
OK:

Voltage: 10 - 14 V

NG → **Check and repair harness or connector.**

OK

2	**Check continuity between terminal A9 - 5 of ABS control (solenoid) relay connector and terminal A19 - 16 of ABS ECU.**

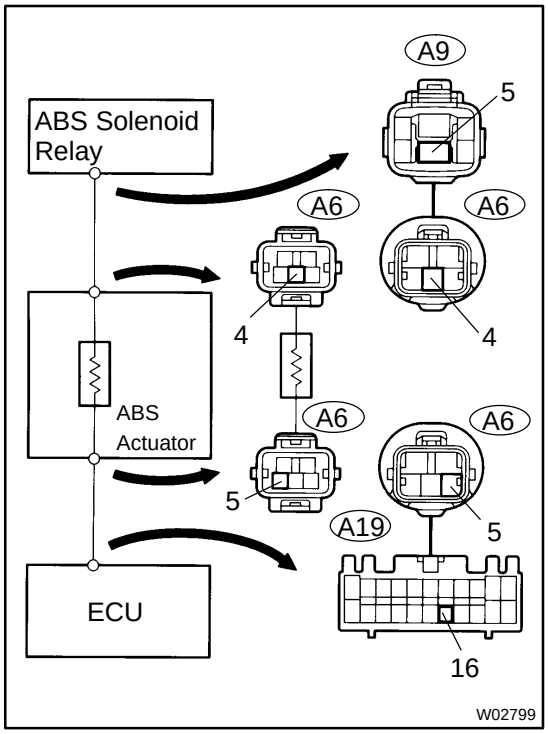

CHECK:
Check continuity between terminal A9 - 5 of ABS control (solenoid) relay connector and terminal A19 - 16 of ABS ECU.
OK:

Continuity

HINT:
There is a resistance of 26 ~ 40 Ω between terminals A6 - 4 and A6 - 5 of ABS actuator.

NG → **Repair or replace harness or ABS actuator.**

OK

3	Check ABS control (solenoid) relay.

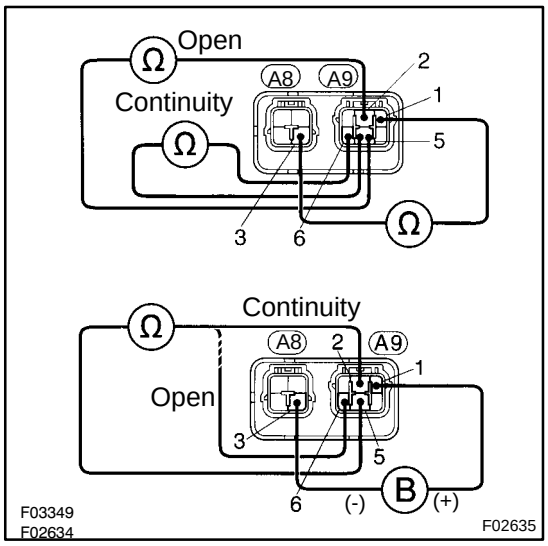

CHECK:

Check continuity between each terminal of ABS control (solenoid) relay.

OK:

Terminals A9 - 1 and A8 - 3	Continuity (Reference value 80 Ω)
Terminals A9 - 5 and A9 - 6	Continuity
Terminals A9 - 2 and A9 - 5	Open

CHECK:

(a) Apply battery voltage between terminals A9 - 1 and A8 - 3.

(b) Check continuity between each terminal of ABS control (solenoid) relay.

OK:

Terminals A9 - 5 and A9 - 6	Open
Terminals A9 - 2 and A9 - 5	Continuity

NG → **Replace ABS control relay.**

OK

4	Check for open and short in harness and connector between ABS control (solenoid) relay and ABS ECU (See page IN-28).

NG → **Repair or replace harness or connector.**

OK

If the same code is still output a after the DTC is deleted, check the contact condition of each connection.
If the connections are normal, the ECU may be defective.

INSPECTION PROCEDURE (2JZ-GTE Engine)

1	**Check voltage between terminals 1 and 2 of R/B No.5 (for ABS solenoid relay).**

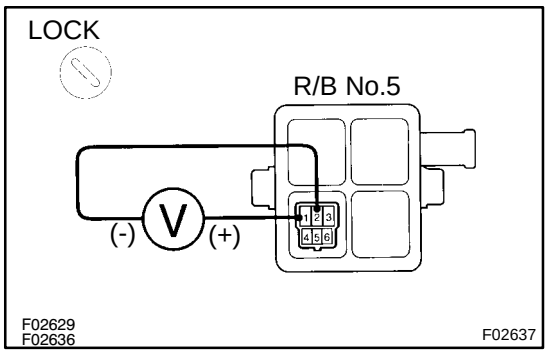

PREPARATION:

Remove ABS solenoid relay from R/B No.5.

CHECK:

Measure voltage between terminals 1 and 2 of R/B No.5 (for ABS solenoid relay).

OK:

Voltage: 10 - 14 V

NG → **Check and repair harness or connector.**

OK

2	**Check continuity between terminal 3 of R/B No.5 (for ABS solenoid relay) and terminal A21 - 4 of ABS ECU.**

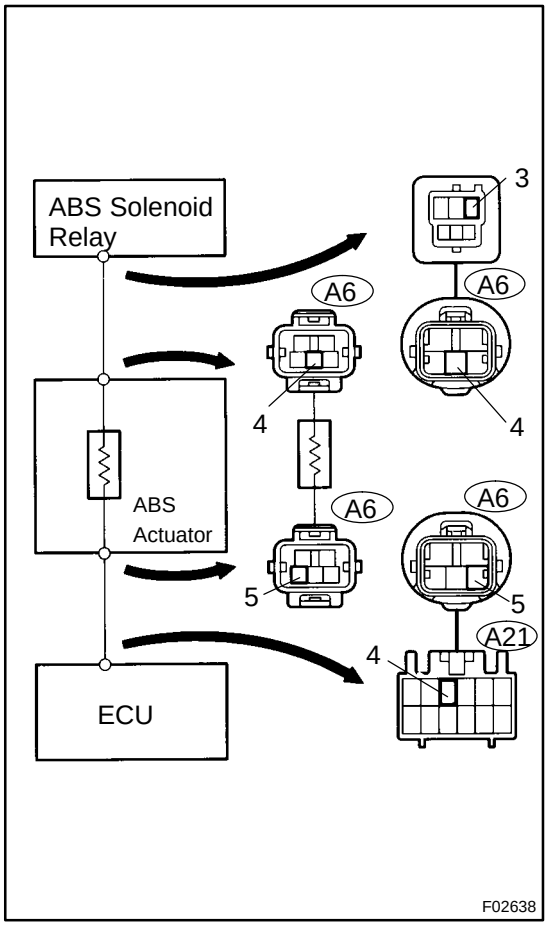

CHECK:

Check continuity between terminal 3 of R/B No.5 (for ABS solenoid relay) and terminal A21 - 4 of ABS ECU.

OK:

Continuity

HINT:

There is a resistance of 26 ~ 40 Ω between terminals A6 - 4 and A6 - 5 of ABS actuator.

NG → **Repair or replace harness or ABS actuator.**

OK

3	Check ABS solenoid relay.

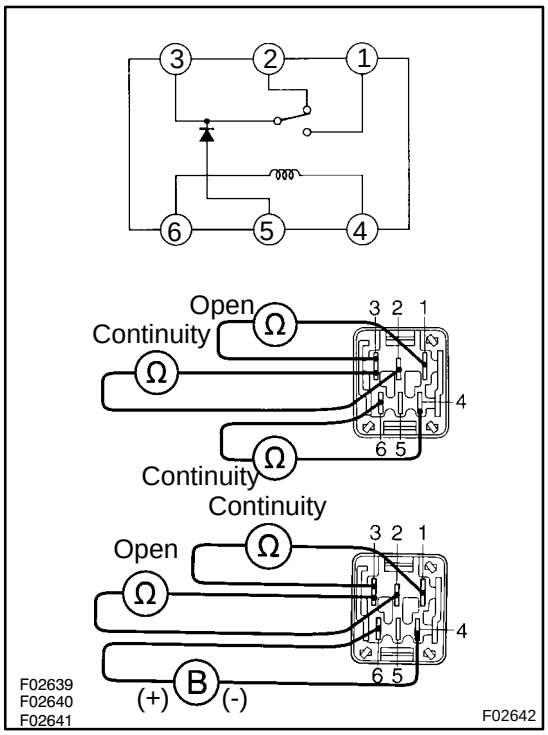

PREPARATION:

Remove solenoid relay from R/B No.5.

CHECK:

Check continuity between each terminal of ABS solenoid relay.

OK:

Terminals 4 and 6	Continuity (Reference value 80 Ω)
Terminals 2 and 3	Continuity
Terminals 1 and 3	Open

CHECK:

(a) Apply battery voltage between terminals 4 and 6.

(b) Check continuity between each terminal of ABS solenoid relay.

OK:

Terminals 2 and 3	Open
Terminals 1 and 3	Continuity

NG → **Replace ABS control relay.**

OK

4	Check for open and short in harness and connector between ABS solenoid relay and ABS ECU (See page IN-28).

NG → **Repair or replace harness or connector.**

OK

If the same code is still output after the DTC is deleted, check the contact condition of each connection.
If the connections are normal, the ECU may be defective.

DI4VD-01

DTC	21, 22, 23, 24	ABS Actuator Solenoid Circuit

CIRCUIT DESCRIPTION

This solenoid goes on when signals are received from the ECU and controls the fluid pressure acting on the brake cylinders, thus controlling the braking force.

DTC No.	DTC Detecting Condition	Trouble Area
21	Conditions (1) through (3) continue for 0.05 sec. or more: (1) ABS solenoid relay terminal (SR) voltage: Below 1.5V (2) Voltage of ABS ECU terminal AST: Battery positive voltage (3) When power transistor of ECU is ON, voltage of terminal SFR is 0 V or battery positive voltage.	□ABS actuator □Open or short in SFR circuit
22	Conditions (1) through (3) continue for 0.05 sec. or more: (1) ABS solenoid relay terminal (SR) voltage: Below 1.5V (2) Voltage of ABS ECU terminal AST: Battery positive voltage (3) When power transistor of ECU is ON, voltage of terminal SFL is 0 V or battery positive voltage.	□ABS actuator □Open or short in SFL circuit
23	Conditions (1) through (3) continue for 0.05 sec. or more: (1) ABS solenoid relay terminal (SR) voltage: Below 1.5V (2) Voltage of ABS ECU terminal AST: Battery positive voltage (3) When power transistor of ECU is ON, voltage of terminal SRH (SRRH) or SRR (SRRR) is 0 V or battery positive voltage.	□ABS actuator □Open or short in SRH (SRRH) or SRR (SRRR) circuit
24*	Conditions (1) through (3) continue for 0.05 sec. or more: (1) ABS solenoid relay terminal (SR) voltage: Below 1.5V (2) Voltage of ABS ECU terminal AST: Battery positive voltage (3) When power transistor of ECU is ON, voltage of terminal SRLH or SRLR is 0 V or battery positive voltage.	□ABS actuator □Open or short in SRLH or SRLR circuit

Fail safe function:

If trouble occurs in the ABS actuator solenoid circuit, the ECU cuts off current to the ABS solenoid relay and prohibits ABS control.

*: SPORT ABS (2JZ-GTE Engine) only

WIRING DIAGRAM

2JZ-GE Engine (NORMAL ABS):

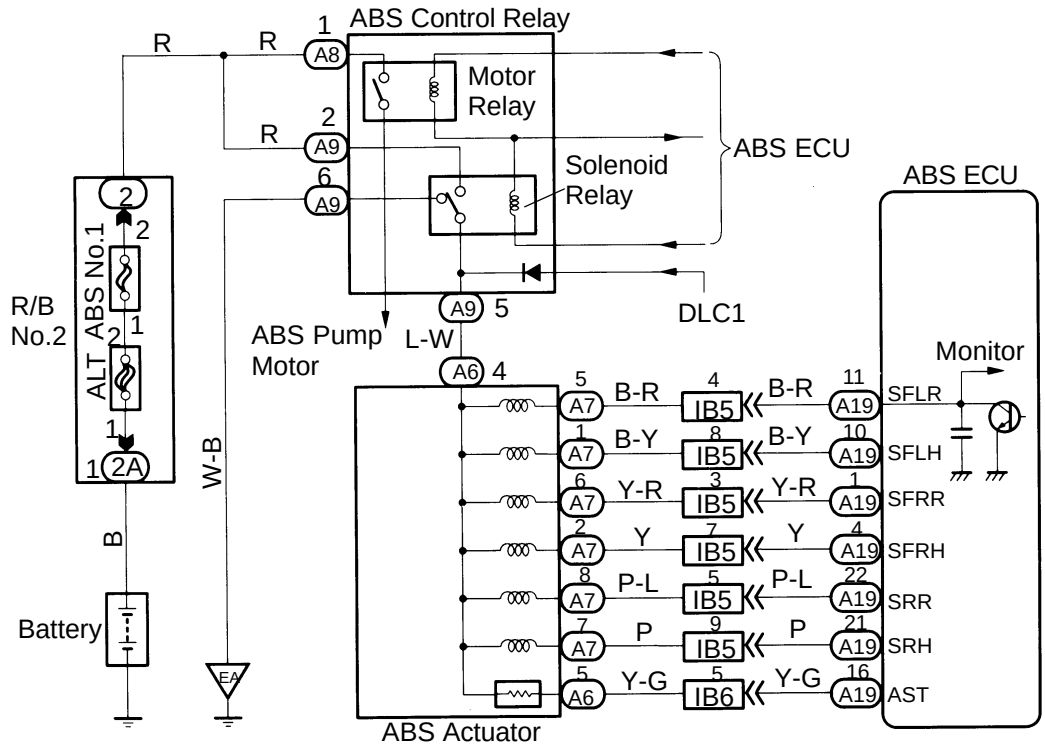

2JZ-GTE Engine (SPORT ABS):

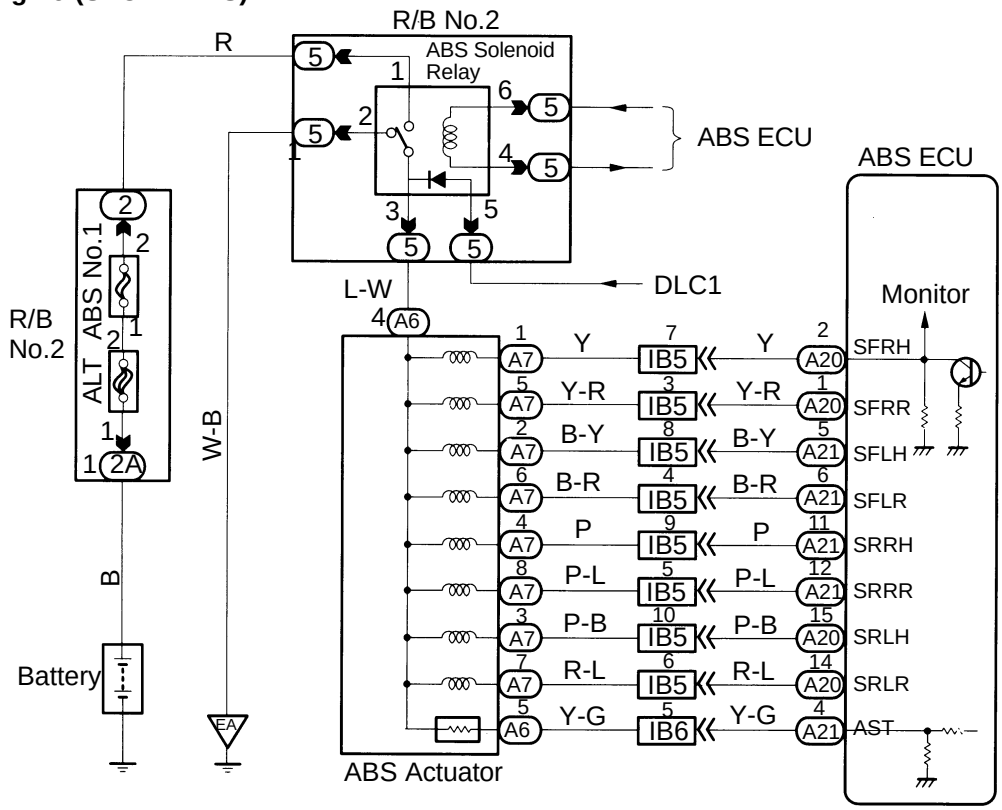

F03320
F03321

F03322

INSPECTION PROCEDURE

1	**Check ABS actuator solenoid.**

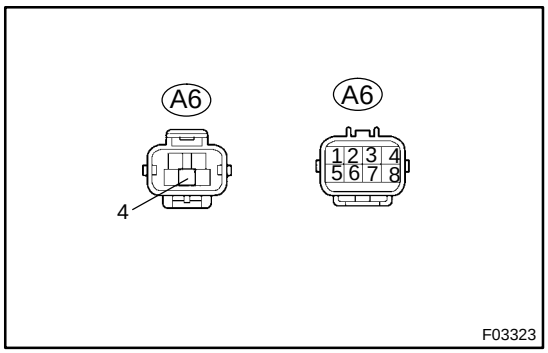

CHECK:

NORMAL ABS (2JZ-GE Engine):

Check continuity between terminal A6 - 4 and A7 - 1, 2, 5, 6, 7, 8 of ABS actuator connector.

SPORT ABS (2JZ-GTE Engine):

Check continuity between terminal A6 - 4 and A7 - 1, 2, 3, 4, 5, 6, 7, 8 of ABS actuator connector.

OK:

Continuity

HINT:

Resistance of each of the solenoids SFRH, SFLH, SRRH and SRLH is 5.0 Ω.

Resistance of each of the solenoids SFRR, SFLR, SRRR and SRLR is 2.2 Ω.

NG → **Replace ABS actuator.**

OK

2	**Check for open and short in harness and connector between ABS ECU and actuator (See page IN-28).**

NG → **Repair or replace harness or connector.**

OK

If the same code is still output after the DTC is deleted, check the contact condition of each connection.
If the connections are normal, the ECU may be defective.

DI4VC-01

DTC	13, 14	ABS Motor Relay Circuit

CIRCUIT DESCRIPTION

This ABS motor relay supplies power to the ABS pump motor. While the ABS is activated, the ECU switches the motor relay ON and operates the ABS pump motor.

DTC No.	DTC Detecting Condition	Trouble Area
13	Conditions (1) and (2) continue for 0.2 sec. or more: (1) ABS motor relay terminal (MR) voltage: Below 1.5V (2) Motor relay monitor terminal (MT) voltage: 0 V	□ ABS motor relay □ Open or short in ABS motor relay circuit
14	Conditions (1) and (2) continue for 4 sec. or more: (1) ABS motor relay terminal (MR) voltage: Battery positive voltage (2) Motor relay monitor terminal (MT) voltage: Battery positive voltage	□ ABS motor relay □ B+ short in ABS motor relay circuit

Fail safe function:

If trouble occurs in the ABS motor relay circuit, the ECU cuts off the current to the ABS solenoid relay and prohibits ABS control.

WIRING DIAGRAM

2JZ-GE Engine (NORMAL ABS):

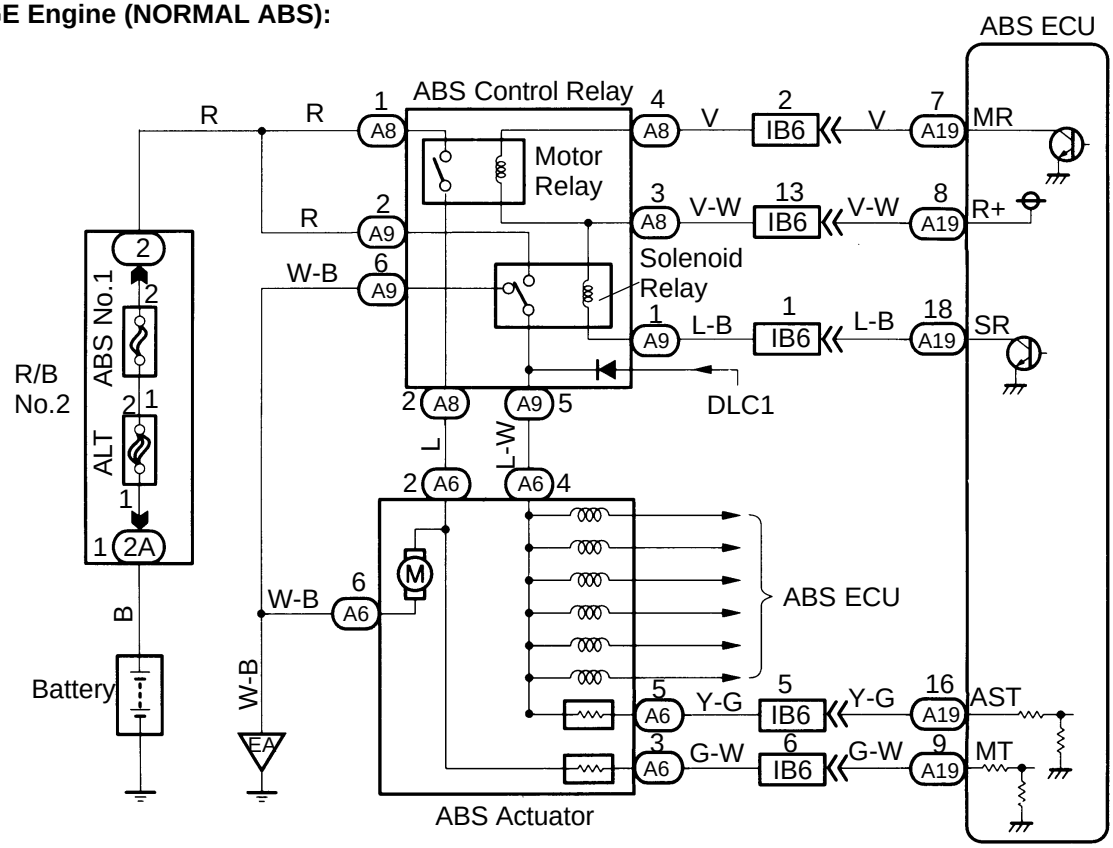

2JZ-GTE Engine (SPORT ABS):

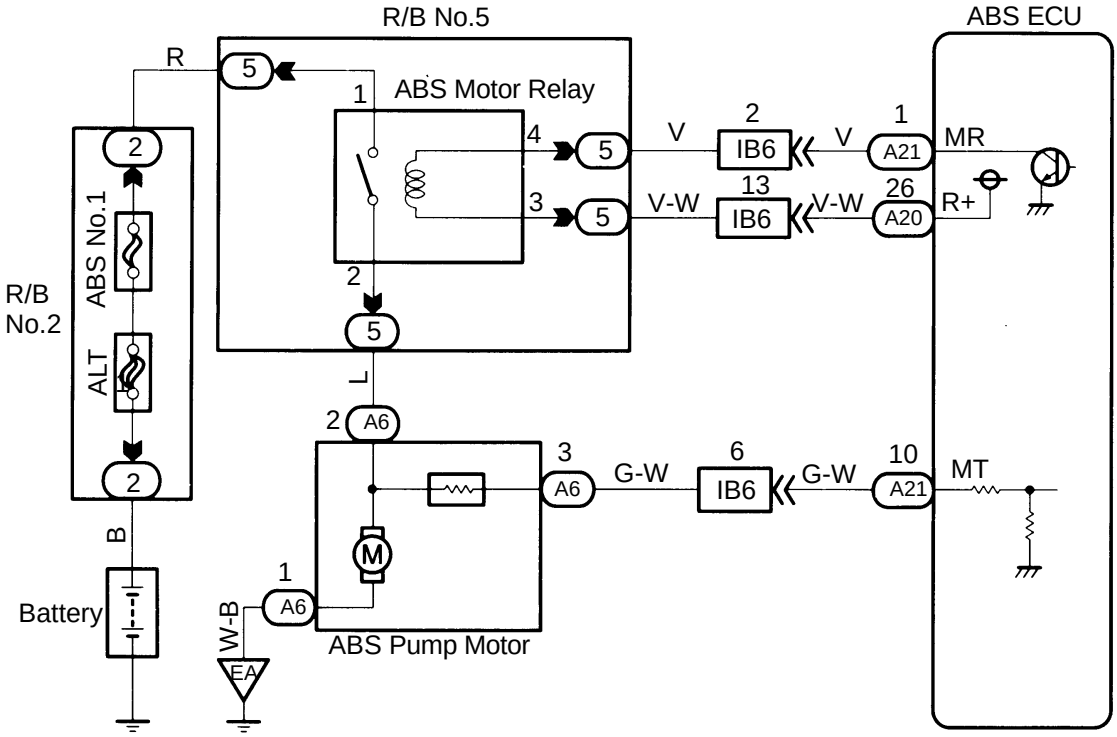

F02626
F02643

F02644

INSPECTION PROCEDURE (2JZ-GE Engine)

1	**Check voltage between terminal A8 - 1 of ABS control (motor) relay connector and body ground.**

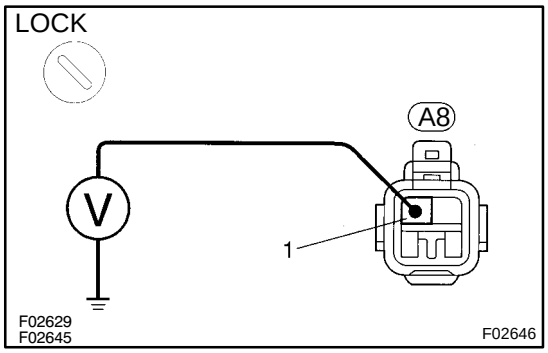

PREPARATION:
Disconnect the ABS control (motor) relay connector.
CHECK:
Measure voltage between terminal A8 - 1 of ABS control (motor) relay connector and body ground.
OK:

Voltage: 10 - 14 V

NG → **Check and repair harness or connector.**

OK

2	**Check continuity between terminal A8 - 2 of ABS control (motor) relay connector and terminal A19 - 9 of ABS ECU.**

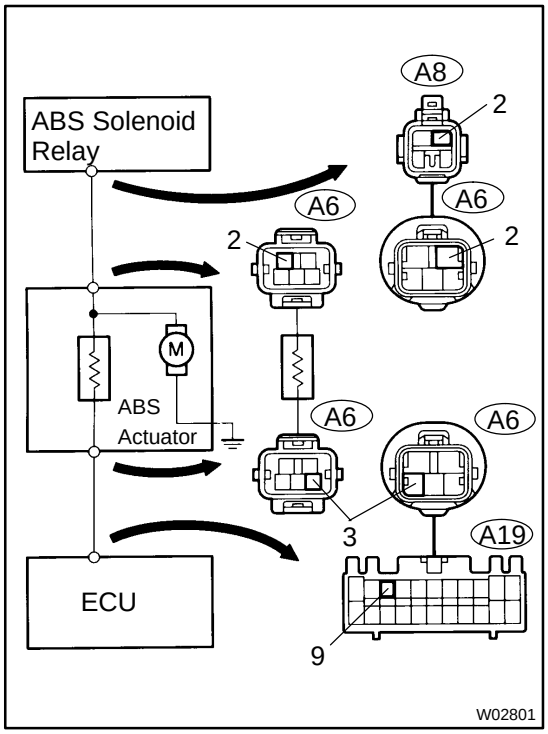

CHECK:
Check continuity between terminal A8 - 2 of ABS control (motor) relay connector and terminal A19 - 9 of ABS ECU.
OK:

Continuity

HINT:
There is a resistance of 26 ~ 40 Ω between terminals A6 - 2 and A6 - 3 of ABS actuator.

NG → **Repair or replace harness or ABS actuator.**

OK

3	Check ABS control (motor) relay.

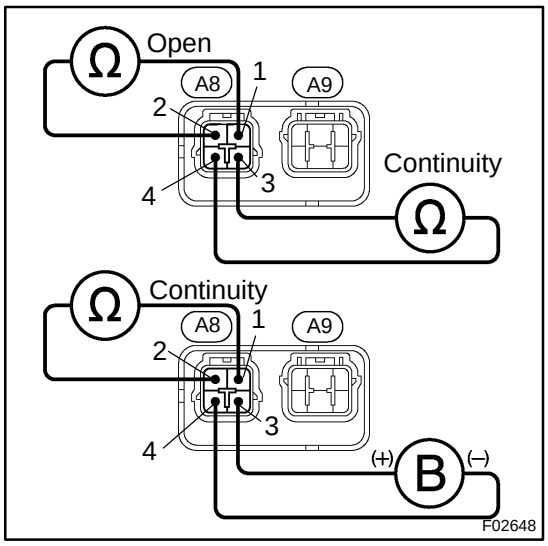

CHECK:

Check continuity between each terminal of ABS control (motor) relay.

OK:

Terminals A8 - 3 and A8 - 4	Continuity (Reference value 62 Ω)
Terminals A8 - 1 and A8 - 2	Open

CHECK:

(a) Apply battery voltage between terminals A8 - 3 and A8 - 4.

(b) Check continuity between terminals of ABS control (motor) relay.

OK:

Terminals A8 - 1 and A8 - 2	Continuity

NG → **Replace ABS control relay.**

OK

4	Check for open and short in harness and connector between ABS motor relay and ABS ECU (See page IN-28).

NG → **Repair or replace harness or connector.**

OK

If the same code is still output after the DTC is deleted, check the contact condition of each connection.
If the connections are normal, the ECU may be defective.

INSPECTION PROCEDURE (2JZ-GTE Engine)

1	**Check voltage between terminal 1 of R/B No.5 (for ABS motor relay) and body ground.**

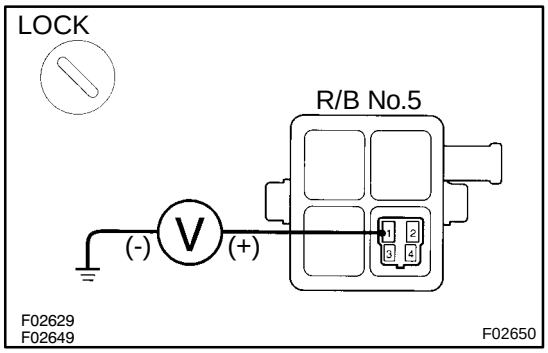

PREPARATION:
Remove ABS motor relay from R/B No.5.
CHECK:
Measure voltage between terminal 1 of R/B No.5 (for ABS motor relay) and body ground.
OK:

Voltage: 10 - 14 V

NG → **Check and repair harness or connector.**

OK

2	**Check continuity between terminal 2 of R/B No.5 (for ABS motor relay) and terminal A21 - 10 of ABS ECU.**

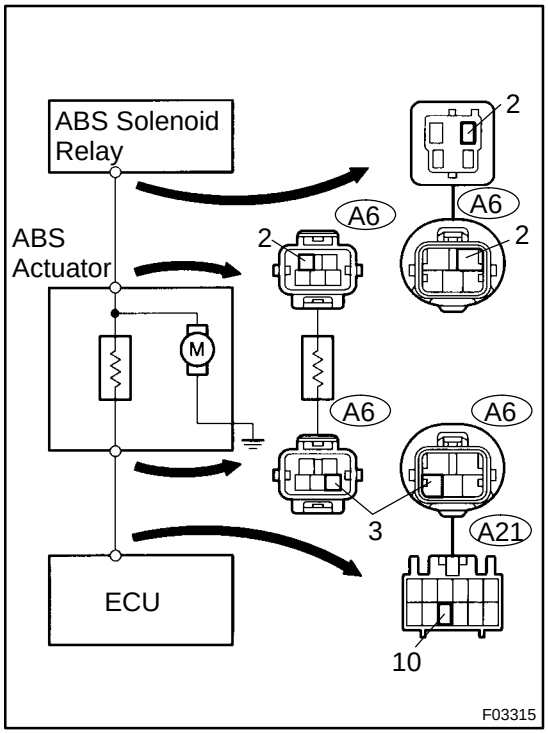

CHECK:
Check continuity between terminal 2 of R/B No.5 (for ABS motor relay) and terminal A21 - 10 of ABS ECU.
OK:

Continuity

HINT:
There is a resistance of 26 ~ 40 Ω between terminals A6 - 2 and A6 - 3 of ABS actuator.

NG → **Repair or replace harness or ABS actuator.**

OK

3	Check ABS motor relay.

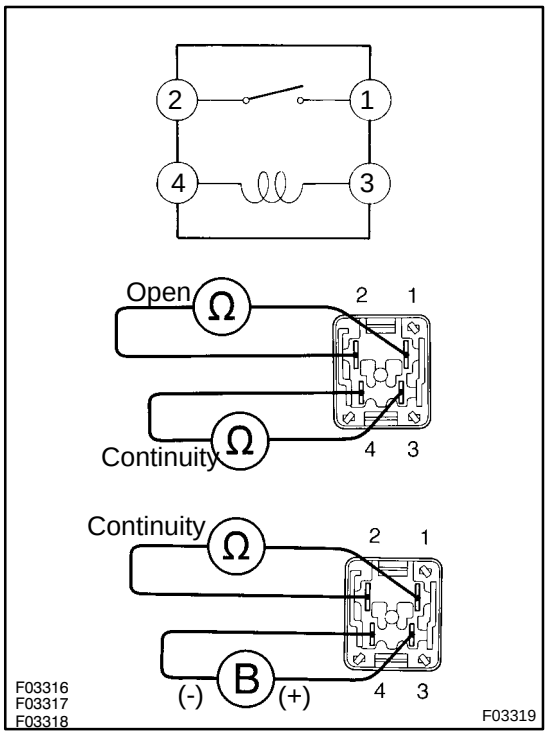

PREPARATION:

Remove motor relay from R/B No.5.

CHECK:

Check continuity between each terminal of motor relay.

OK:

Terminals 3 and 4	Continuity (Reference value 62 Ω)
Terminals 1 and 2	Open

CHECK:

(a) Apply battery voltage between terminals 3 and 4.

(b) Check continuity between terminals.

OK:

Terminals 1 and 2	Continuity

NG → **Replace ABS motor relay.**

OK ↓

4	Check for open and short in harness and connector between ABS motor relay and ABS ECU (See page IN-28).

NG → **Repair or replace harness or connector.**

OK ↓

If the same code is still output after the DTC is deleted, check the contact condition of each connection.
If the connections are normal, the ECU may be defective.

DI4VE-01

DTC	31, 32, 33, 34	Speed Sensor Circuit

CIRCUIT DESCRIPTION

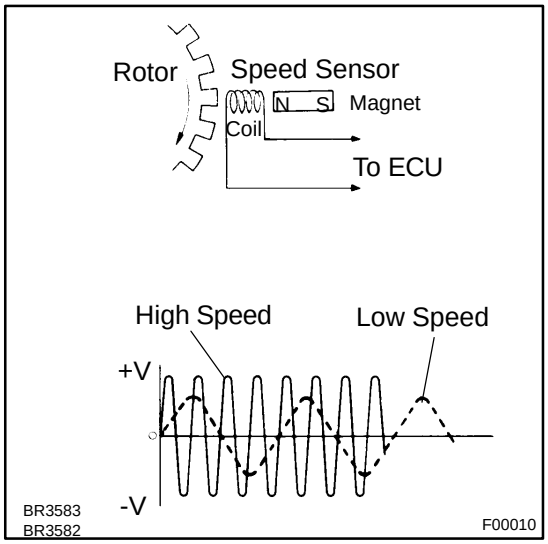

The speed sensor detects the wheel speed and sends the appropriate signals to the ECU. These signals are used to control the ABS control system. The front and rear rotors each have 48 serrations.

When the rotos rotate, the magnetic field emitted by the permanent magnet in the speed sensor generates an AC voltage. Since the frequency of this AC voltage changes in direct proportion to the speed of the rotor, the frequency is used by the ECU to detect the speed of each wheel.

DTC No.	DTC Detecting Condition	Trouble Area
31,32,33,34	Detection of any of conditions (1) through (3): (1) At vehicle speed of 10 km/h (6 mph) or more, pulses are not input for 15 sec. (2) Momentary interruption of the vehicle speed sensor signal occurs at least 7 times in the time between switching the ignition switch ON and switching it OFF. (3) Abnormal fluctuation of speed sensor signals with the vehicle speed 20 km/h (12 mph) or more.	□Right front, left front, right rear and left rear speed sensor □Open or short in each speed sensor circuit □Sensor rotor

HINT:

DTC No.31 is for the right front speed sensor.

DTC No.32 is for the left front speed sensor.

DTC No.33 is for the right rear speed sensor.

DTC No.34 is for the left rear speed sensor.

Fail safe function:

If trouble occurs in the speed sensor circuit, the ECU cuts off current to the ABS solenoid relay and prohibits ABS control.

WIRING DIAGRAM

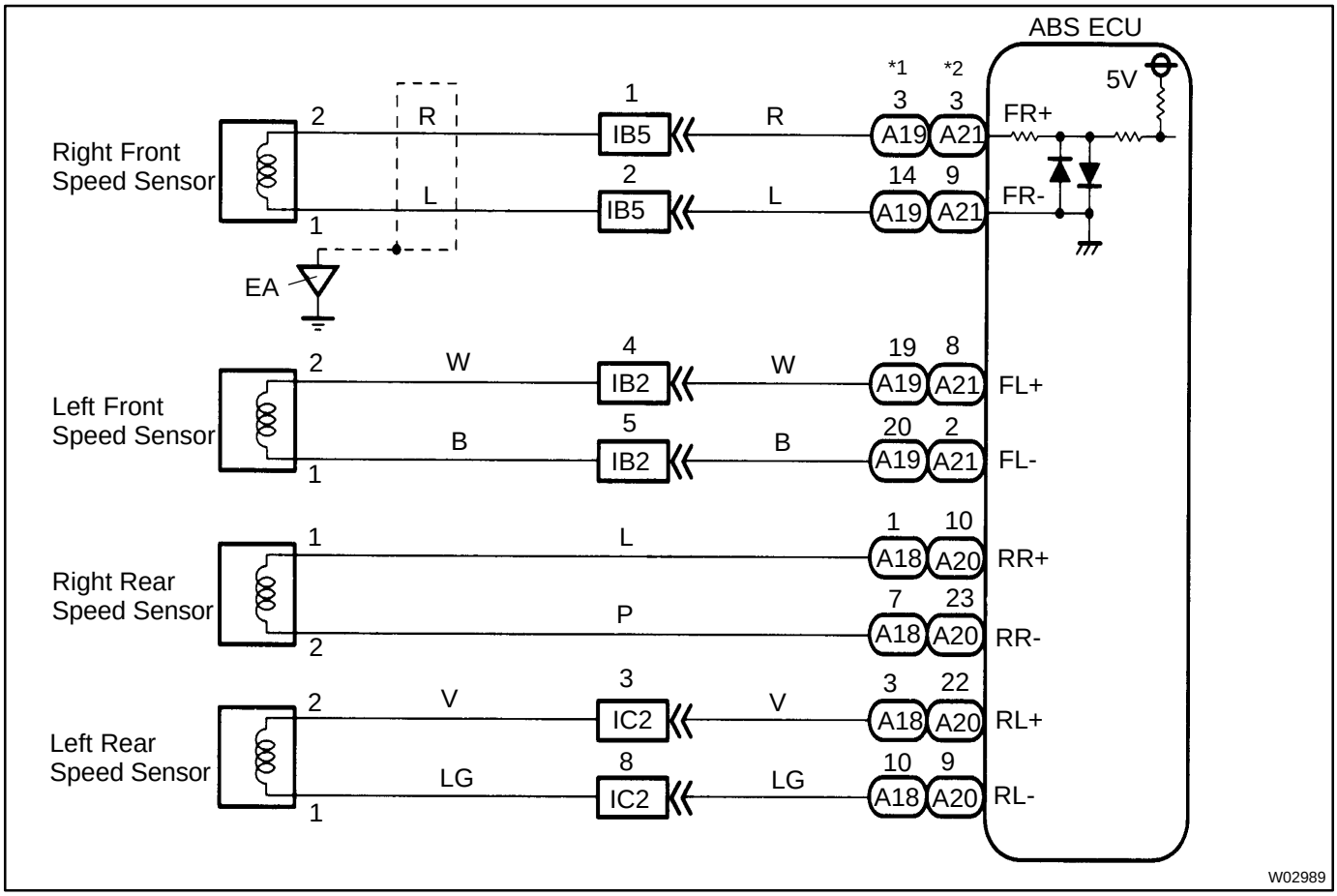

*1: NORMAL ABS (2JZ-GE Engine)
*2: SPORT ABS (2JZ-GTE Engine)

INSPECTION PROCEDURE

1	**Check speed sensor.**

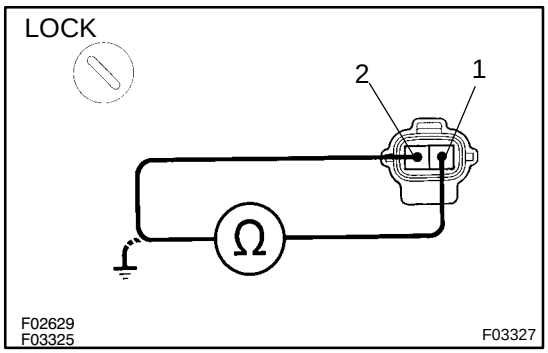

Front

PREPARATION:

(a) Remove front fender splash shield.

(b) Disconnect speed sensor connector.

CHECK:

Measure resistance between terminals 1 and 2 of speed sensor connector.

OK:

Resistance: 0.6 - 2.5 kΩ

CHECK:

Measure resistance between terminals 1 and 2 of speed sensor connector and body ground.

OK:

Resistance: 1 MΩ or higher

CHECK:

Check the sensor connector.

OK:

(1) There is not play on the connector connecting part.

(2) Connectors are connected each other securely.

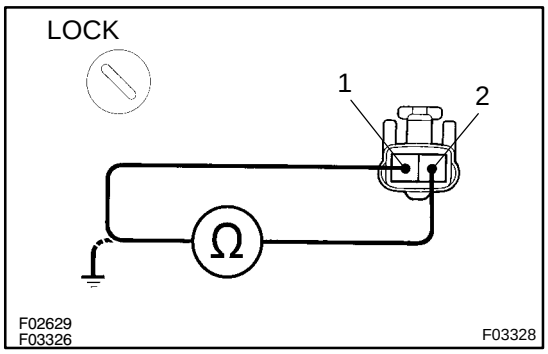

Rear

PREPARATION:

(a) Remove rear, seat cushion, seat back and quarter trim panel.

(b) Disconnect speed sensor connector.

CHECK:

Measure resistance between terminals 1 and 2 of speed sensor connector.

OK:

Resistance: 0.65 - 1.8 kΩ

CHECK:

Measure resistance between terminals 1 and 2 of speed sensor connector and body ground.

OK:

Resistance: 1 MΩ or higher

CHECK:

Check the sensor connector.

OK:

(1) There is not play on the connector connecting part.

(2) Connectors are connected each other securely.

NG	**Replace speed sensor.**

NOTICE:

Check the speed sensor signal last (See page DI-442).

OK

2	**Check for open and short in harness and connector between each speed sensor and ABS ECU (See page IN-28).**

NG	**Repair or replace harness or connector.**

OK

3	Check sensor rotor and sensor installation.

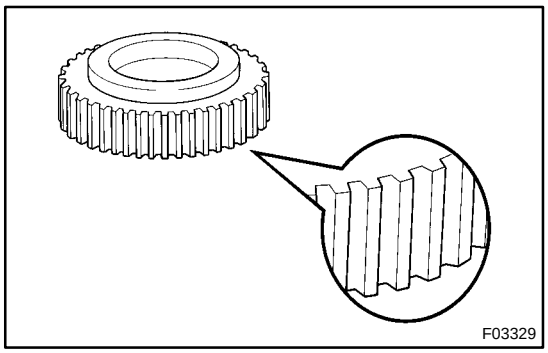

Front

PREPARATION:

Remove front speed sensor rotor (See page SA-12).

CHECK:

Check sensor rotor serrations.

OK:

No scratches, missing teeth or foreign objects.

CHECK:

Check the front speed sensor installation.

OK:

The installation bolt is tightened properly and there is no clearance between sensor and steering knuckle.

CHECK:

Check the sensor tip.

OK:

No scratches or foreign objects on the sensor tip.

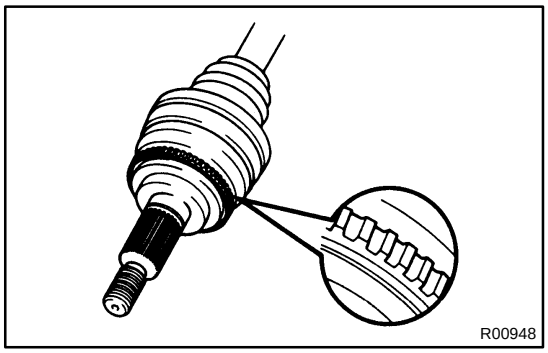

Rear

PREPARATION:

Remove the drive shaft (See page SA-43).

CHECK:

Check the sensor rotor serrations.

OK:

No scratches or missing teeth.

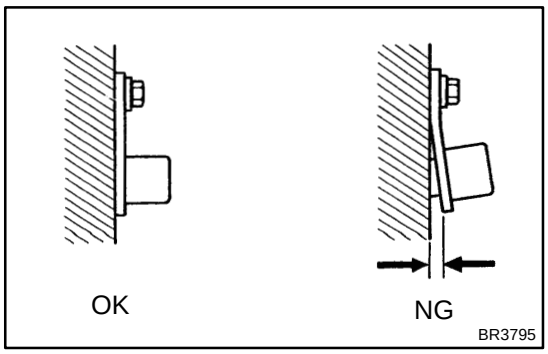

CHECK:

Check the rear speed sensor installation.

OK:

The installation bolt is tightened properly and there is no clearance between the sensor and rear axle carrier.

CHECK:

Check the sensor tip.

OK:

No scratches or foreign objects on the sensor tip.

NG → **Replace speed sensor and grease or rotor and grease.**

NOTICE:

Check the speed sensor signal last (See page DI-442).

OK

Check and replace ABS ECU.

DI4VF-01

DTC	41	IG Power Source Circuit

CIRCUIT DESCRIPTION

This is the power source for the ECU, hence the CPU and the actuators.

DTC No.	DTC Detecting Condition	Trouble Area
41	Voltage at ECU terminal IG1 is less than 9.5 V for more than 10 sec. while vehicle speed is 3 km/h (1.9 mph) or more.	□Battery □IC regulator □Open or short in power source circuit

Fail safe function:

If trouble occurs in the power source circuit, the ECU cuts off current to the ABS solenoid relay and prohibits ABS control.

WIRING DIAGRAM

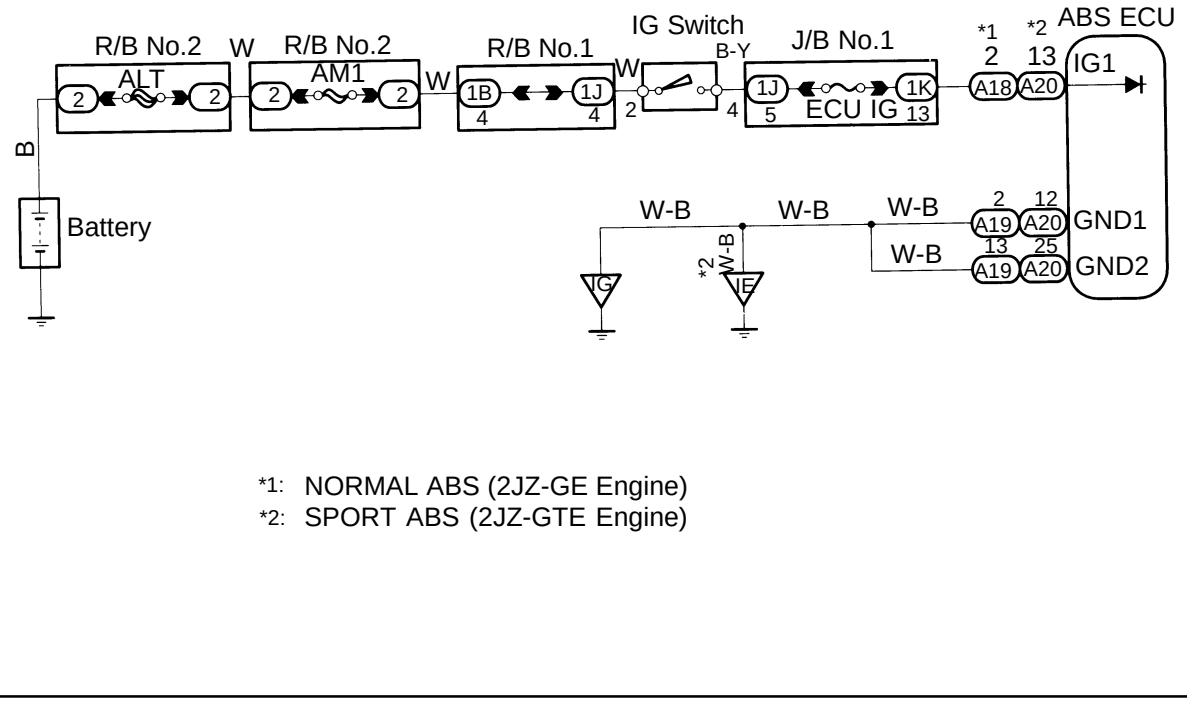

*1: NORMAL ABS (2JZ-GE Engine)
*2: SPORT ABS (2JZ-GTE Engine)

F03330

INSPECTION PROCEDURE

1	**Check battery positive voltage.**

OK:

Voltage: 10 - 14 V

NG → **Check and repair the charging system.**

OK

2	**Check voltage between terminals IG1 and GND of ABS ECU connector.**

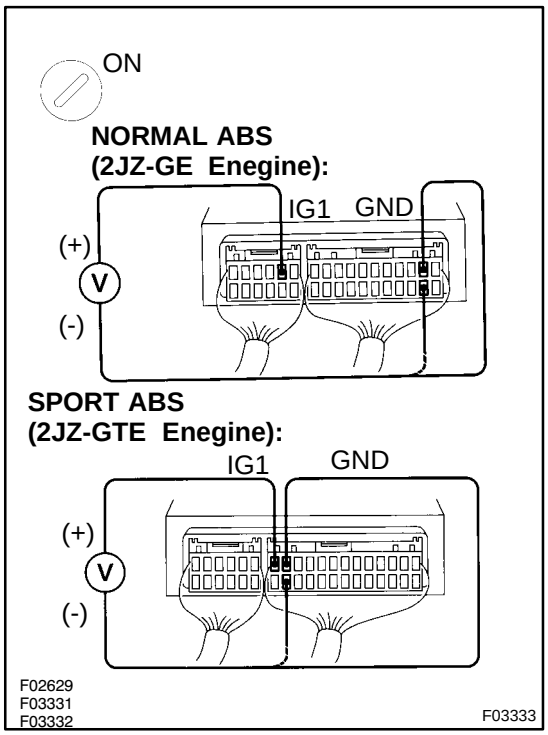

PREPARATION:

Remove ABS ECU with connectors still connected.

CHECK:

(a) Turn ignition switch ON.

(b) Measure voltage between terminals IG1 and GND of ABS ECU connector.

OK:

Voltage: 10 - 14 V

OK → **Check and replace ABS ECU.**

NG

3	**Check continuity between terminal GND of ABS ECU connector and body ground.**

NORMAL ABS (2JZ-GE Engine):

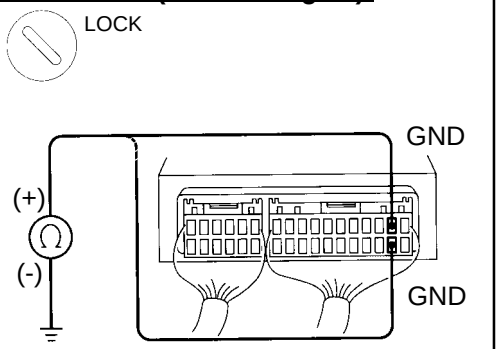

SPORT ABS (2JZ-GTE Engine):

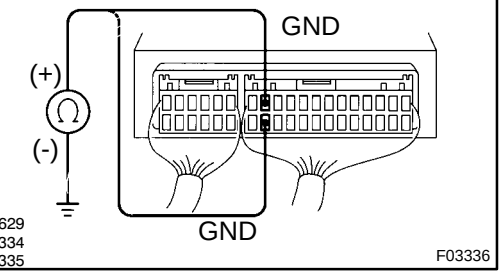

CHECK:

Measure resistance between terminals GND of ABS ECU connector and body ground.

OK:

Resistance: 1 Ω or less

NG → **Repair or replace harness or connector.**

OK

4	Check ECU-IG fuse.

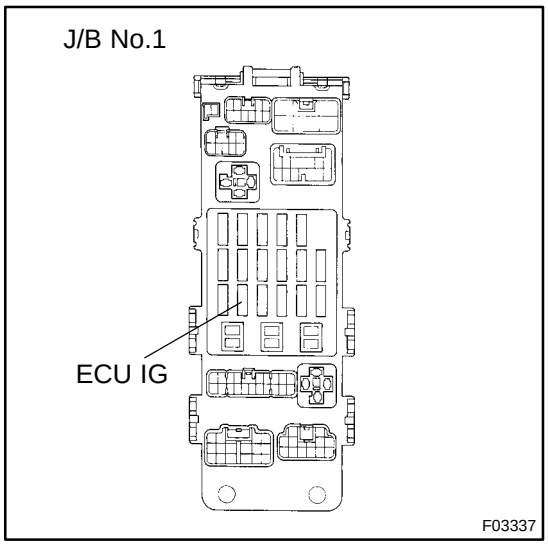

PREPARATION:
Remove ECU-IG fuse from J/B No.1.
CHECK:
Check continuity of ECU-IG fuse.
OK:

Continuity

NG → **Check for short in all the harness and components connected to ECU-IG fuse (See attached wiring diagram).**

OK

Check for open in harness and connector between ABS ECU and battery (See page IN-28).

DI4VG-01

DTC	43, 45	Malfunction is Deceleration Sensor (SPORT ABS (2JZ-GTE Engine) only)

CIRCUIT DESCRIPTION

DTC No.	DTC Detecting Condition	Trouble Area
43	Either of the following (1) or (2) is detected: (1) Input from the deceleration sensor does not change at one cycle (0 km/h → more than 30km/h → 0 km/h) for 16 times continuously. (2) When the brake pedal is not depressed at vehicle speed of 5 km/h or more, forward and backward G (more than 0.4 G) is detected for 30 seconds or more.	□Deceleration sensor □Wire harness for deceleration sensor system
45	At vehicle speed of 30 km/h or more, the deceleration sensor output and vehicle acceleration from wheel speed remain abnormally different for 60 seconds or more.	□Deceleration sensor □Wire harness for deceleration sensor system

INSPECTION PROCEDURE

1	Check deceleration sensor (See page DI-442).

NG → Replace deceleration sensor.

OK

2	Check for open or short in harness and connector between sensor and ABS ECU (See page IN-28).

NG → Repair or replace harness and connector.

OK

Check and replace ABS ECU.

DI4VH-01

DTC	44	Deceleration Sensor Circuit (SPORT ABS (2JZ-GTE Engine) only)

CIRCUIT DESCRIPTION

This sensor detects deceleration on the vehicle. The sensor signal is used in ABS control. If the sensor functions abnormally, the ABS warning light comes on but the ABS still operates.

DTC No.	DTC Detecting Condition	Trouble Area
44	Either of the following (1), (2) or (3) is detected: (1) IG switch ON and output voltage of GL1 or GL2 remains 0.5 V or less or 4.5 V or more for more than 1.2 sec. (2) At vehicle speed of 0 km/h, outputs of GL1 and GL2 remains abnormally different for 60 sec. or more (3) IG switch ON and VGS ⊕ 4.4 V, VGS ⊖ 5.5 V continues for 1.2 sec. or more.	□Deceleration sensor □Open or short in deceleration sensor circuit

WIRING DIAGRAM

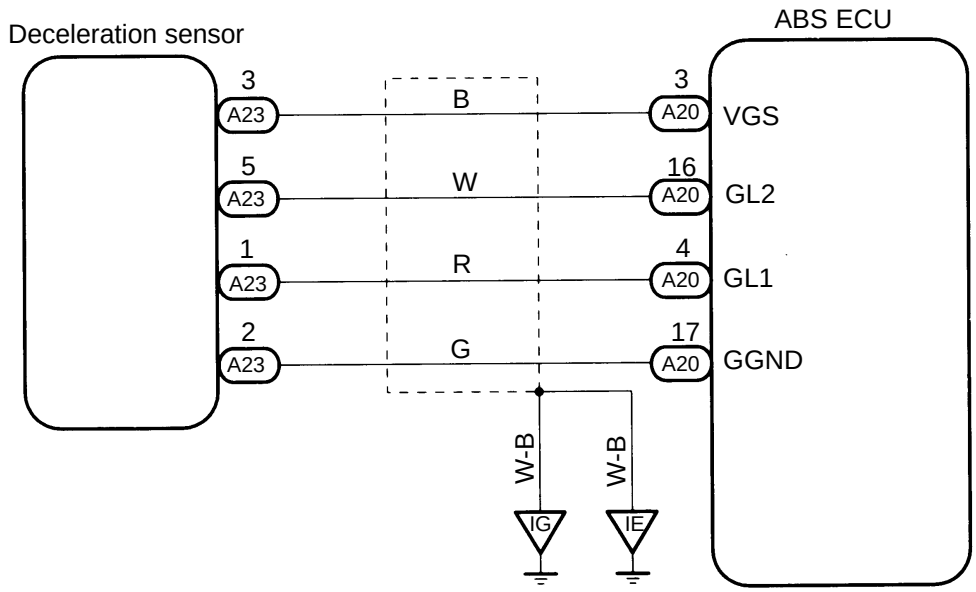

F03338

INSPECTION PROCEDURE

1	**Check for open and short in harness and connector between sensor and ABS ECU (See page IN-28).**

NG → **Repair or replace harness or connector.**

OK

2	**Check voltage between terminals GL1, GL2, VGS of ECU and body ground.**

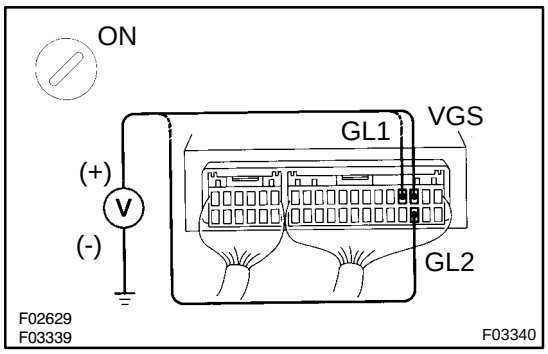

PREPARATION:

(a) Remove ABS ECU with connectors still connected.
(b) Disconnect sensor connector.
(c) Turn the ignition switch ON.

CHECK:

Measure voltage between terminals GL1, GL2, VGS of ECU and body ground.

OK:

Voltage:
GL1, GL2: 0.5 - 4.5 V
VGS: 4.5 - 5.5 V

NG → **Check and replace ABS ECU.**

OK

Check and replace deceleration sensor.

DI4VI-01

DTC	49	Stop Light Switch Circuit

CIRCUIT DESCRIPTION

This stop light switch senses whether the brake pedal is depressed or released, and sends a signal to the ECU.

DTC No.	DTC Detecting Condition	Trouble Area
49	1.2 - 1.7 V of STP voltage is continued for 0.3 sec. or more.	Open in stop light circuit

WIRING DIAGRAM

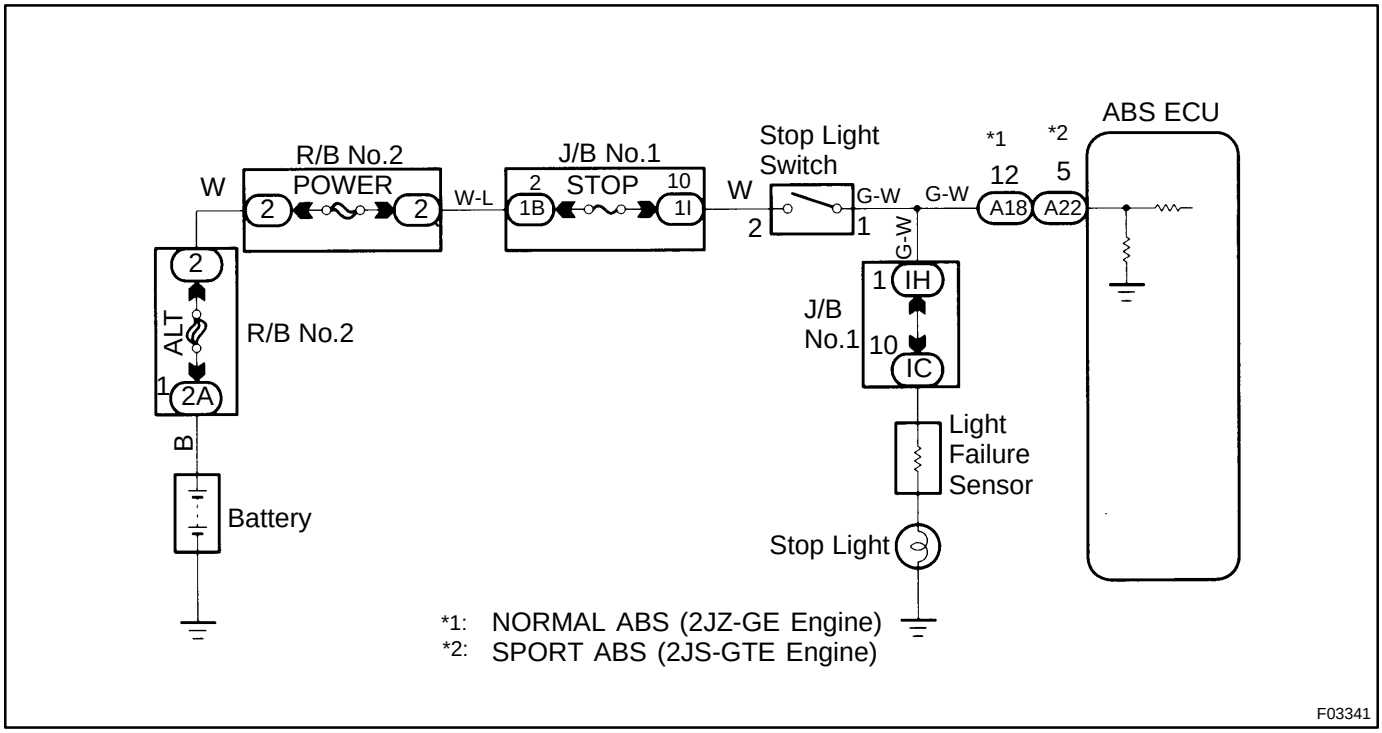

INSPECTION PROCEDURE

1	**Check operation of stop light.**

CHECK:

Check that stop light lights up when brake pedal is depressed and turns off when brake pedal is released.

NG → **Replace stop light bulb.**

OK

2	**Check voltage between terminal STP of ABS ECU and body ground.**

NORMAL ABS (2JZ-GE Engine):

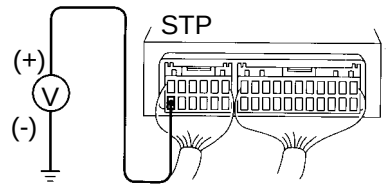

SPORT ABS (2JZ-GTE Engine):

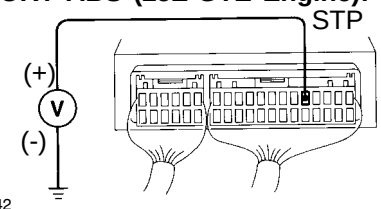

F03342
F03343
F03344

PREPARATION:

Remove ABS ECU with connectors still connected.

CHECK:

Measure voltage between terminal STP of ABS ECU and body ground when brake pedal is depressed.

OK:

Voltage: 8 - 14 V

OK	**Proceed to next circuit inspection shown on problem symptoms chart (See page DI-452).**

NG

3	**Check for open in harness and connector between ABS ECU and stop light switch (See page IN-28).**

NG	**Repair or replace harness or connector.**

OK

Check and replace ABS ECU.

DI4VJ-01

DTC	51	ABS Pump Motor Lock

CIRCUIT DESCRIPTION

DTC No.	DTC Detecting Condition	Trouble Area
51	Pump motor is not operating normally during initial check.	□ABS pump motor

Fail safe function:
If trouble occurs in the ABS pump motor, the ECU cuts off the current to the ABS solenoid relay and prohibits ABS control.

WIRING DIAGRAM

See page DI-460 .

INSPECTION PROCEDURE

See inspection of ABS actuator (See page BR-66 or BR-66).

DI4VK-01

DTC	Always ON	Malfunction in ECU IG Power Source Circuit

CIRCUIT DESCRIPTION

This is the power source for the ECU, hence the CPU, and the actuators.

DTC No.	DTC Detecting Condition	Trouble Area
Always ON	Voltage of ECU terminal IG1 remains at more than 17 V for 1 sec. or more.	□Battery □IC regulator □Open or short in power source circuit □ECU

Fail safe function:
If trouble occurs in the power source circuit, the ECU cuts off current to the ABS solenoid relay and prohibits ABS control.

WIRING DIAGRAM

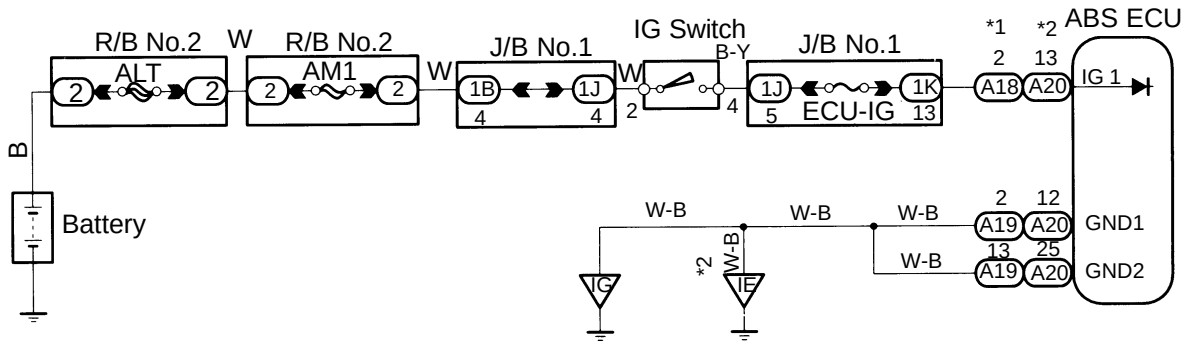

*1: NORMAL ABS (2JZ-GE Engine)
*2: SPORT ABS (2JZ-GTE Engine)

F03345

INSPECTION PROCEDURE

1	**Is DTC output?**

Check DTC on page DI-442 .

YES → **Repair circuit indicated by the code output.**

NO

2	**Is normal code displayed?**

YES → **Check ABS solenoid relay. Check for short in harness and connector between ABS solenoid relay and DLC1 (See page IN-28).**

NO

3	**Is ABS warning light go off?**

YES → **Check for open or short in harness and conector between ECU-IG Fuse and ECU (See page IN-28).**

NO

4	**Check battery positive voltage.**

PREPARATION:
Start the engine.
CHECK:
Check the battery positive voltage.
OK:
Voltage: 10 - 16 V

NG → **Check and repair the charging system.**

OK

5	**Check ABS warning light.**

PREPARATION:

(a) Turn the ignition switch OFF.

(b) Disconnect the conector from the ABS ECU.

(c) Turn the ignition switch ON.

CHECK:

Check the ABS warning light goes off.

OK	**Check and replace ABS ECU.**

NG

Check for short in harness and connector between combination meter and ABS ECU, combination meter and DLC1 (See page IN-28).

DI4VL-01

ABS Warning Light Circuit

CIRCUIT DESCRIPTION

If the ECU detects trouble, it lights the ABS warning light while at the same time prohibiting ABS control. At this time, the ECU records a DTC in memory.

After removing the short pin of the DLC1, connect terminals Tc and E1 of the DLC1 or DLC2 to make the ABS warning light to blink and output the DTC.

WIRING DIAGRAM

2JZ-GE Engine (NORMAL ABS):

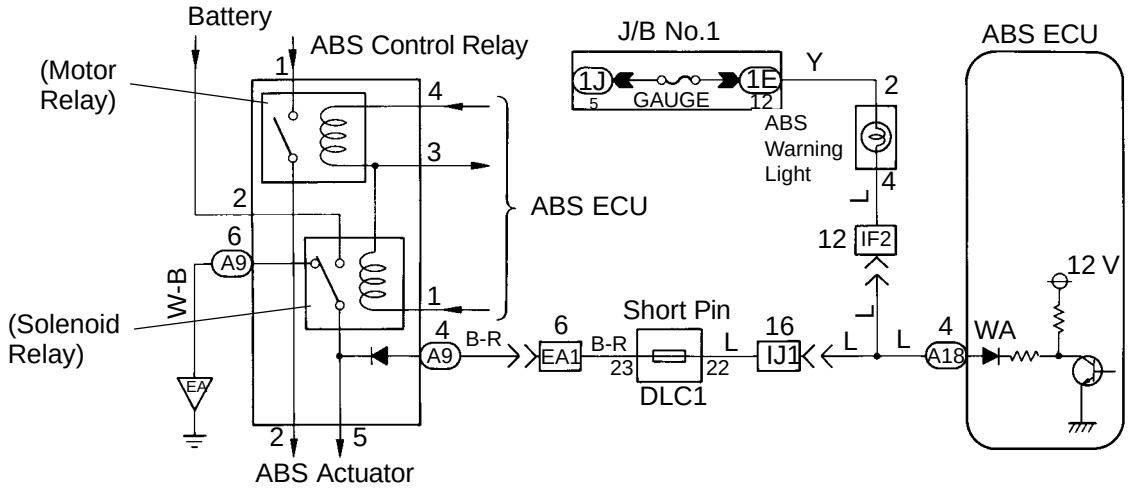

2JZ-GTE Engine (SPORT ABS):

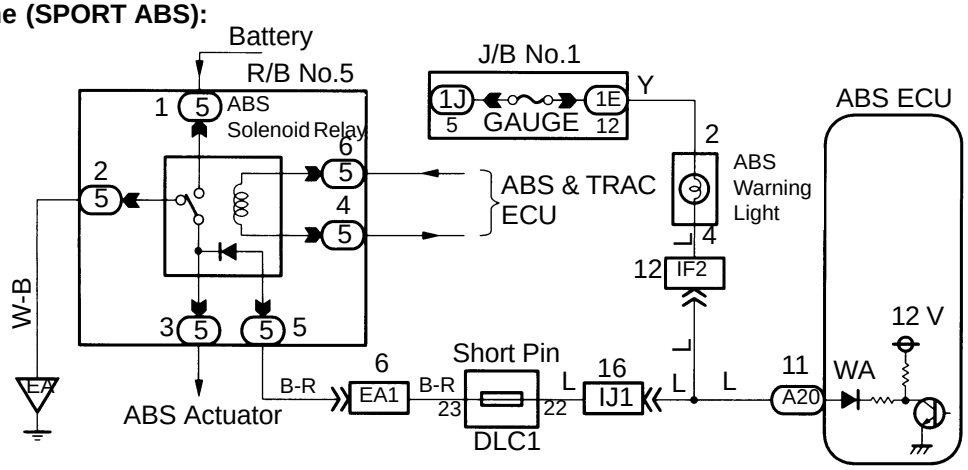

F03346
F03347

F03348

INSPECTION PROCEDURE

2JZ-GE Engine:

Troubleshooting in accordance with the chart below for each trouble symptom.

ABS warning light does not light up	Go to step 1
ABS warning light remains on	Go to step 3

1	**Check ABS warning light.**

See Combination Meter Troubleshooting on page BE-2 .

NG → **Replace bulb or combination meter assembly.**

OK

2	**Check ABS control (solenoid) relay.**

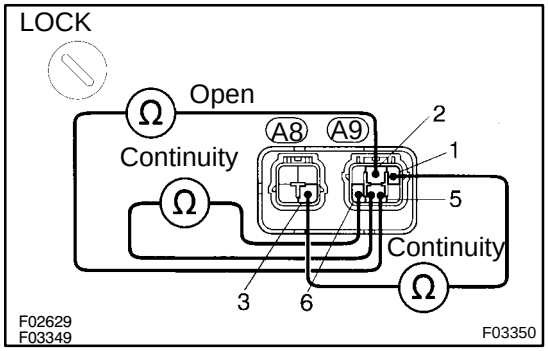

PREPARATION:

Disconnect the connectors from ABS control (solenoid) relay.

CHECK:

Check continuity between each terminal of ABS control (solenoid) relay.

OK:

Terminals A9 - 1 and A8 - 3	Continuity (Reference value 80 Ω)
Terminals A9 - 5 and A9 - 6	Continuity
Terminals A9 - 2 and A9 - 5	Open

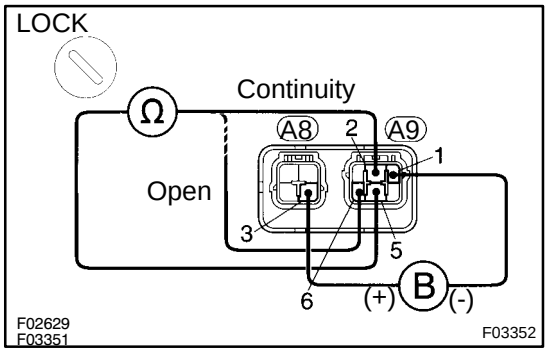

CHECK:

(a) Apply battery positive voltage between terminals A9 - 1 and A8 - 3.

(b) Check continuity between each terminal of ABS solenoid relay.

OK:

Terminals A9 - 5 and A9 - 6	Open
Terminals A9 - 2 and A9 - 5	Continuity

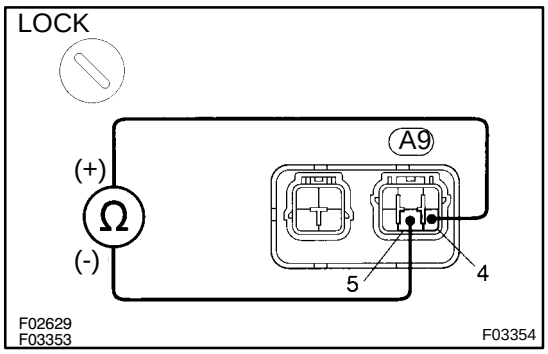

CHECK:

Connect the ⊕ test lead to terminal A9 - 4 and the ⊖ lead to terminal A9 - 5. Check continuity between terminals.

OK:

Continuity

If there is no continuity, connect the ⊖ test lead to terminal A9 - 4 and the ⊕ lead to terminal A9 - 5. Recheck continuity between terminals.

NG	**Replace ABS control relay.**

OK

Repair or replace and check for open in harness and connector between DLC1 and ABS control (solenoid) relay and body ground (See page IN-28).

3	**Is DTC output?**

Check DTC on page DI-442 .

YES	**Repair circuit indicated by the code output.**

NO

4	**Does ABS warning light go off if short pin is removed?**

NO	**Check for short in harness and connector between warning light and DLC1 and ECU (See page IN-28).**

YES

5	**Check ABS control (solenoid) relay (See step No.2).**

NG → **Replace ABS control relay.**

OK

Repair or replace and check for short in harness and connector between DLC1 and ABS control (solenoid) relay (See page IN-18).

2JZ-GTE Engine:

Troubleshoot in accordance with the chart below for each trouble symptom.

ABS warning light does not light up	Go to step 1
ABS warning light remains on	Go to step 3

1	**Check ABS warning light.**

See combination meter troubleshooting on page BE-2 .

NG → **Replace bulb or combination meter assembly.**

OK

2	**Check ABS solenoid relay.**

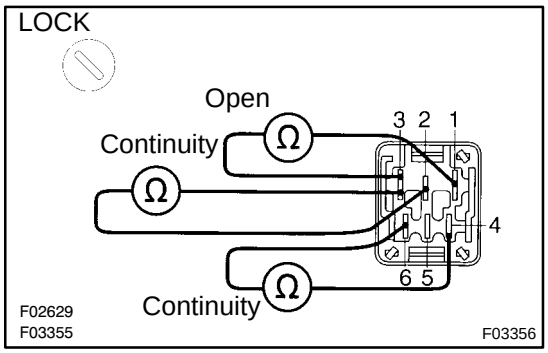

PREPARATION:

Remove solenoid relay from R/B No.5.

CHECK:

Check continuity between each terminal of ABS solenoid relay.

OK:

Terminals 4 and 6	Continuity (Reference value 80 Ω)
Terminals 2 and 3	Continuity
Terminals 1 and 3	Open

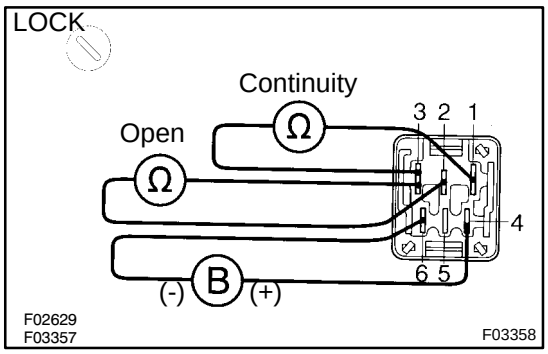

CHECK:

(a) Apply battery positive voltage between terminals 4 and 6.

(b) Check continuity between each terminal of ABS solenoid relay.

OK:

Terminals 2 and 3	Open
Terminals 1 and 3	Continuity

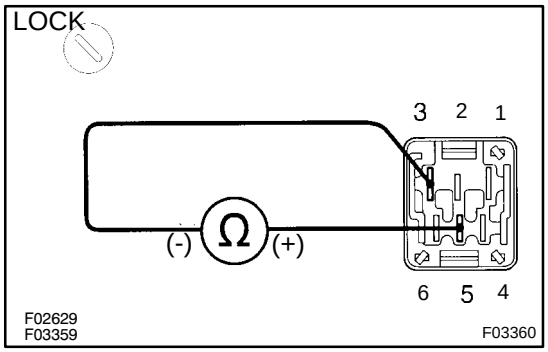

CHECK:

Connect the ⊕ test lead to terminal 5 and the ⊖ lead to terminal 3. Check continuity between the terminals.

OK:

Continuity

If there is not continuity, connect the ⊖ test lead to terminal 5 and the ⊕ lead to terminal 3. Recheck continuity between terminals.

NG → **Replace ABS solenoid relay.**

OK

Repair or replace and check for open in harness and connector between DLC1 and ABS solenoid relay and body ground (See page IN-28).

3	**Is DTC output?**

Check DTC on page DI-442 .

YES → **Repair circuit indicated by the code output.**

NO

4	Does ABS warning light go off if short pin is removed?

NO → Check for short in harness and connector between warning light and DLC1 and ECU (See page IN-28).

YES

5	Check ABS solenoid relay (See step No.2).

NG → Replace ABS control relay.

OK

Repair or replace and check for short in harness and connector between DLC1 and ABS solenoid relay (See page IN-28).

DI4VM-01

Tc Terminal Circuit

CIRCUIT DESCRIPTION

Connecting terminals Tc and E1 of the DLC1 or the DLC1 or the DLC2 causes the ECU to display the DTC by flashing the ABS warning light.

WIRING DIAGRAM

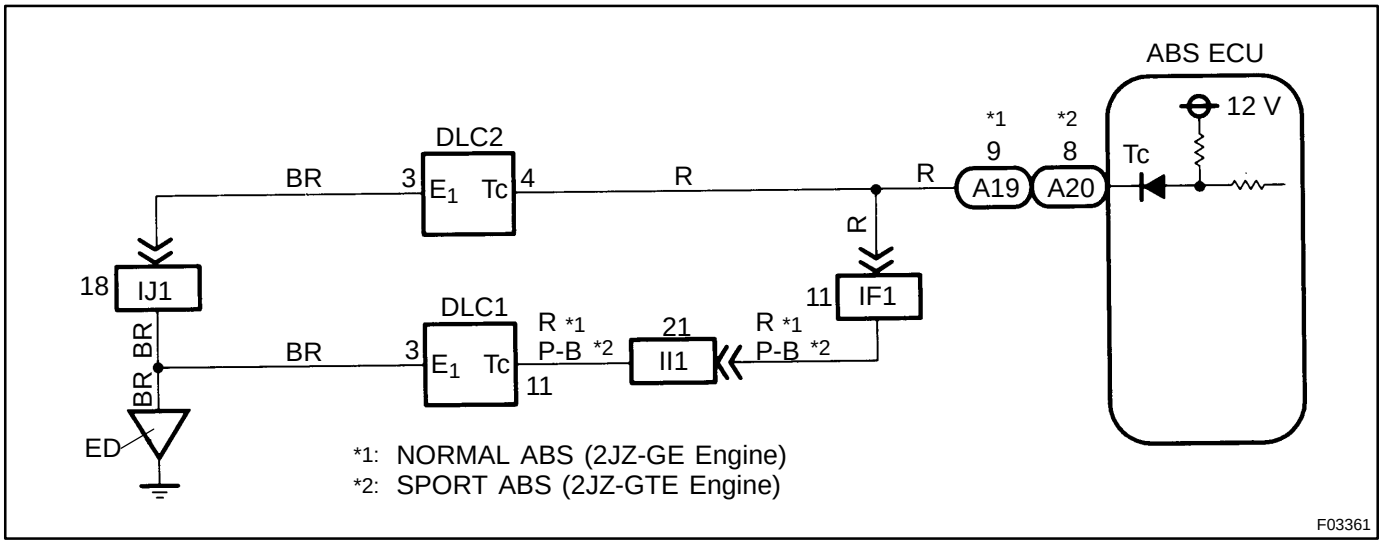

INSPECTION PROCEDURE

1	**Check voltage between terminals Tc and E1 of DLC2 or DLC1.**

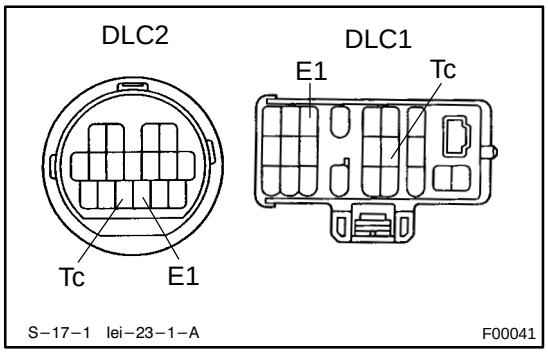

PREPARATION:

Turn ignition switch ON.

CHECK:

Measure voltage between terminals Tc and E1 of DLC2 or DLC1.

OK:

Voltage: 10 - 14 V

OK

If ABS warning light does not blink even after Tc and E1 are connected, the ECU may be defective.

NG

2	**Check for open and short in harness and connector between ABS ECU and DLC2 or DLC1, DLC2 or DLC1 and body ground (See page IN-28).**

NG → **Repair or replace harness or connector.**

OK

Check and replace ABS ECU.

DI4VN-01

Ts Terminal Circuit

CIRCUIT DESCRIPTION

The sensor check circuit detects abnormalities in the speed sensor signal which cannot be detected with the DTC check.
Connecting terminals Ts and E1 of the DLC1 in the engine compartment starts the check.

WIRING DIAGRAM

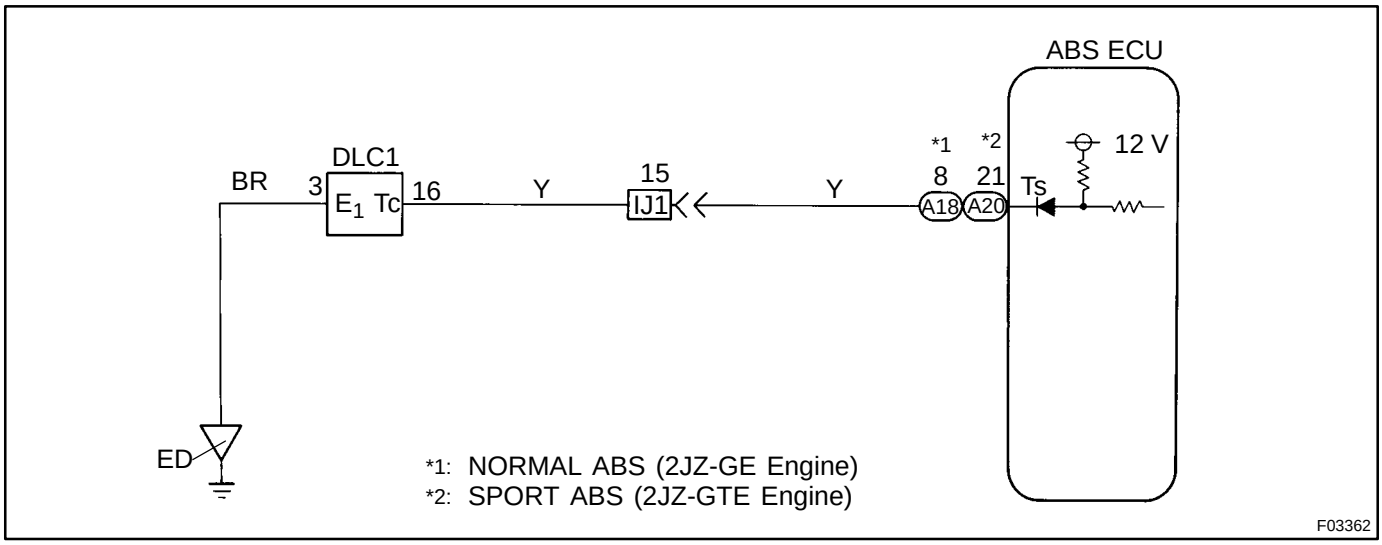

INSPECTION PROCEDURE

1	**Check voltage between terminals Ts and E1 of DLC1.**

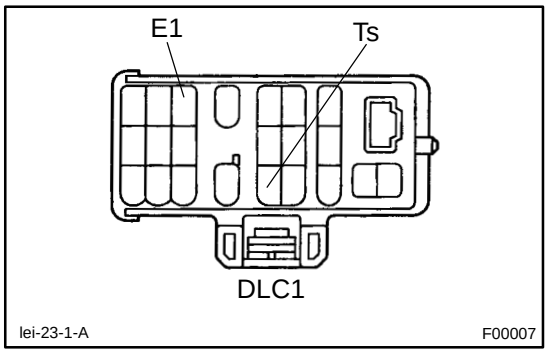

PREPARATION:
Turn ignition switch ON.
CHECK:
Measure voltage between terminals Ts and E1 of DLC1.
OK:
Voltage: 10 - 14 V

OK → **If ABS warning light does not blink even after Ts and E1 are connected, the ECU may be defective.**

NG

2	**Check for open and short in harness and connector between ABS ECU and DLC1, DLC1 and body ground (See page IN-28).**

NG → **Repair or replace harness or connector.**

OK

Check and replace ABS ECU.

DI4VO-01

Check for Fluid Leakage

Check for fluid leakage from actuators or hydraulic lines.

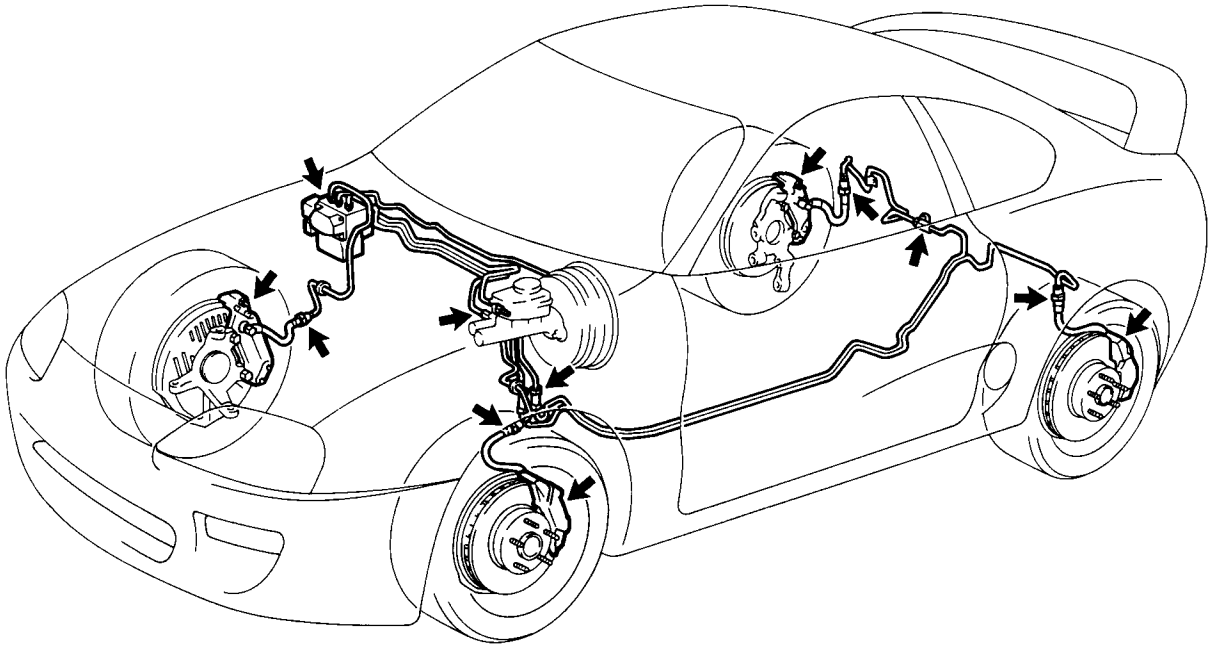

F03363

ABS & TRACTION CONTROL SYSTEM

DI4VP-01

HOW TO PROCEED WITH TROUBLESHOOTING

Troubleshooting in accordance with the procedure on the following pages.

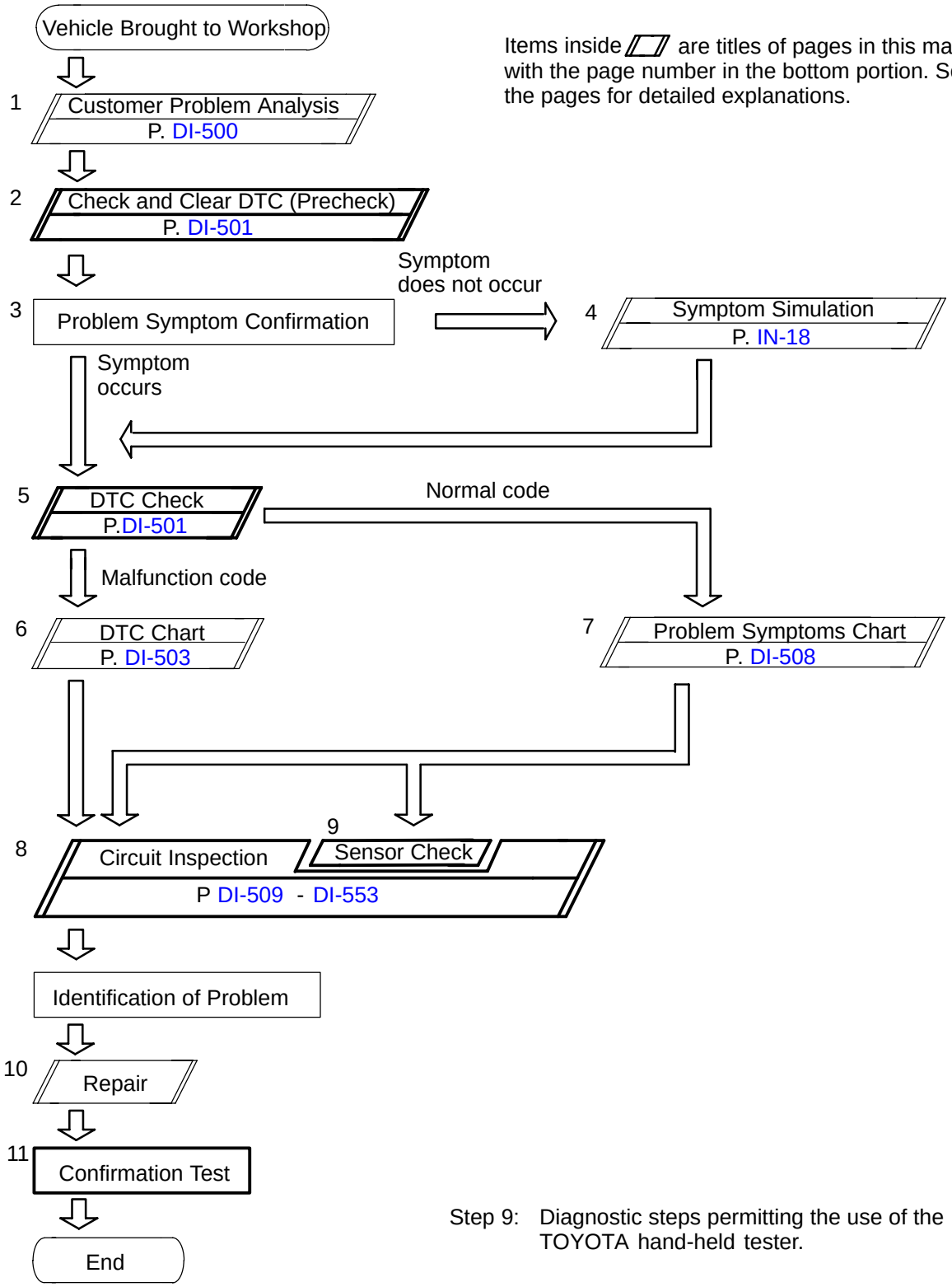

Items inside ▱ are titles of pages in this manual, with the page number in the bottom portion. See the pages for detailed explanations.

Step 9: Diagnostic steps permitting the use of the TOYOTA hand-held tester.

DI4VQ-01

CUSTOMER PROBLEM ANALYSIS CHECK

TRAC Check Sheet

Inspector's Name :

Customer's Name		**Registration No.**	
		Registration Year	/ /
		Frame No.	
Date Vehicle Brought In	/ /	**Odometer Reading**	km miles

Date Problem First Occurred	/ /
Frequency Problem Occurs	☐ Continuous ☐ Intermittent (times a day)

Symptoms	☐ TRAC does not operate. (Wheels spin when starting rapidly.)	
	TRAC OFF Indicator Light Abnormal	☐ Remains ON ☐ Blinks ☐ Does not Light Up
	SLIP Indicator Light Abnormal	☐ Remains ON ☐ Does not Light Up
	Snow Indicator Light Abnormal	☐ Remains ON ☐ Does not Light Up

Check Item	**Malfunction Indicator Light**	☐ Normal ☐ Malfunction Code (Code)

DTC Check	**1st Time**	☐ Normal Code ☐ Malfunction Code (Code)
	2nd Time	☐ Normal Code ☐ Malfunction Code (Code)

DI4VR-01

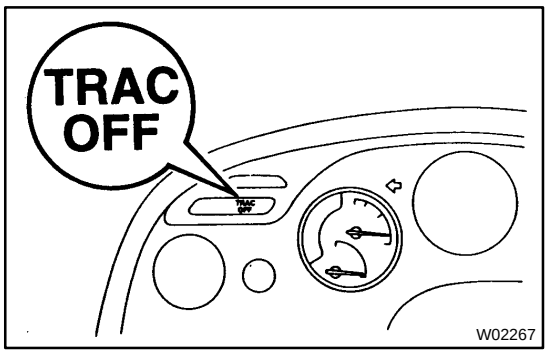

PRE-CHECK

1. DIAGNOSIS SYSTEM

(a) Check the indicator.

When the ignition switch is turned ON, check that the TRAC OFF indicator light goes on, and when the engine is started, check that the TRAC OFF indicator light goes off.

HINT:

If the indicator check result is not normal, proceed to trouble-shooting for the TRAC OFF indicator light circuit (See page DI-547).

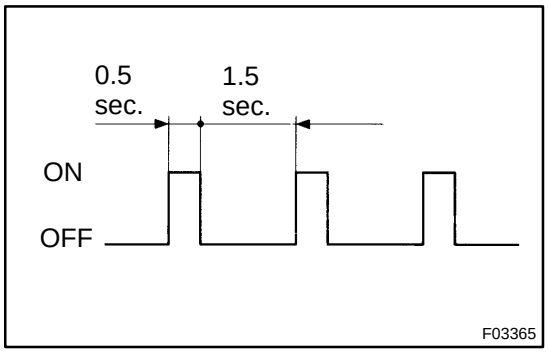

(b) Check the DTC.

(1) Turn the ignition switch ON.

If the ECU stores DTC, the TRAC OFF indicator light blinks after lighting up for 3 seconds.

The blinking pattern is shown on the left.

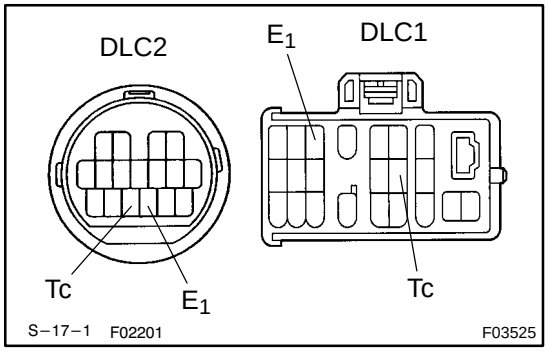

(2) Using SST, connect terminals Tc and E_1 of DLC2 or DLC1.

SST 09843-18020

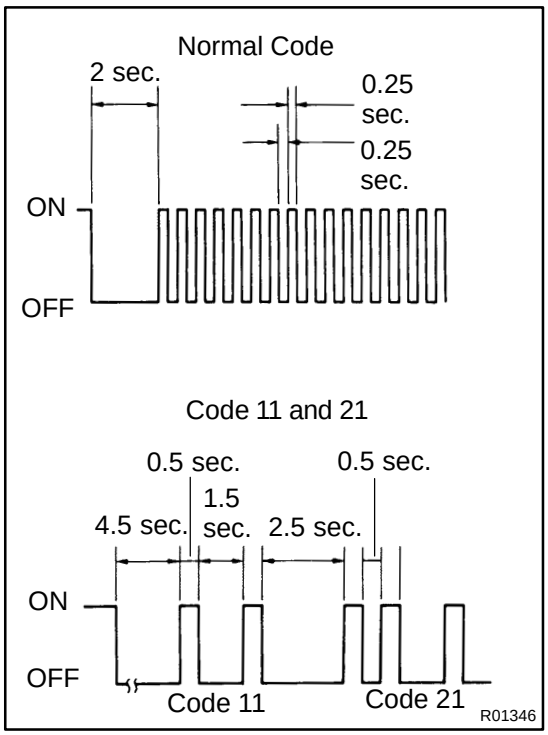

(3) Read the DTC from the TRAC OFF indicator light on the combination meter.

HINT:

- If no code appears, inspect the diagnostic circuit or TRAC OFF indicator light circuit (See page DI-553 or DI-547).
- As an example, the blinking patterns for normal code and codes 11 and 21 are shown on the left.

(4) Codes are explained in the code table on page DI-503 .

(5) After completing the check, disconnect terminals Tc and E1, and turn off the display.

If 2 or more malfunctions are indicated at the same time, the lowest numbered DTC will be displayed 1st.

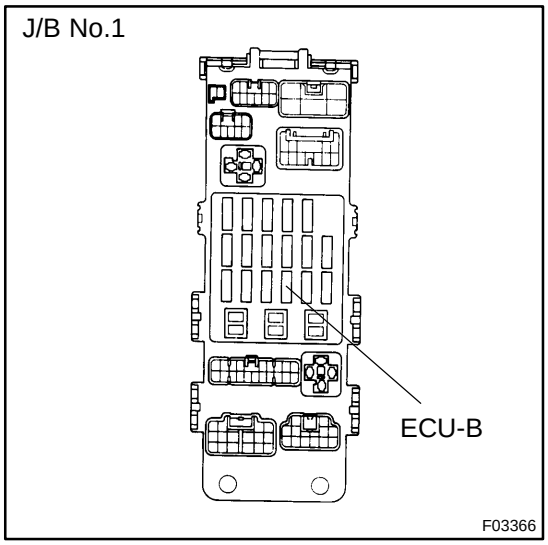

(c) Clear the DTC.

(1) Remove the ECU-B fuse from the J/B No.1 for 10 sec. or more.

(2) Install the ECU-B fuse.

(3) Confirm that the TRAC OFF indicator light shows the normal code.

DI4VS-01

DIAGNOSTIC TROUBLE CODE CHART

HINT:

Using SST 09843-18020, connect the terminals Tc and E_1.

If a malfunction code is displayed during the DTC check, check the circuit listed for that code. For details of each code, turn to the page referred to under the "See page" for the respective "DTC No." in the DTC chart.

DTC No. (See Page)	Detection Item	Trouble Area
11 (DI-509)	Throttle control relay circuit open	□Throttle control relay □TRAC fuse □Wire harness and connector (throttle control relay circuit) □Throttle control ECU
12 (DI-509)	Throttle control relay circuit short	□Throttle control relay □Wire harness and connector (throttle control relay circuit) □Throttle control ECU
21 (DI-513)	Sub-throttle valve motor circuit open or short	□Sub-throttle valve motor □Wire harness and connector (sub-throttle valve motor and E01 circuit) □Throttle control ECU
22 (DI-513)	Sub-throttle valve motor malfunction	□Sub-throttle valve motor □Sub-throttle valve □Sub-throttle position sensor □Wire harness and connector (E1 circuit) □Throttle control ECU
23 (DI-516)	Throttle body malfunction	□Sub-throttle valve □Sub-throttle position sensor □Throttle control ECU
24 (DI-519)	Sub-throttle position sensor leakage/sub-throttle valve stuck	□Sub-throttle valve □Sub-throttle position sensor □Wire harness and connector (E1 circuit) □Throttle control ECU
31 (DI-522)	Throttle position sensor signal malfunction	□Throttle position sensor □Wire harness and connector (throttle position senor and E1 circuit) □Throttle control ECU
32 (DI-526)	Sub-throttle position sensor signal malfunction	□Sub-throttle position sensor □Sub-throttle valve motor □Sub-throttle valve □Wire harness and connector (sub-throttle position senor and E1 circuit) □Throttle control ECU
41 (DI-530)	Engine revolution signal open or short	□Wire harness and connector (NE circuit) □ECM □Throttle control ECU
42 (DI-532)	ECM malfunction	□Wire harness and connector (EFIF circuit) □ECM □Throttle control ECU
43 (DI-534)	ECM communication circuit malfunction	□Wire harness and connector (EFI+ and EFI- circuit) □ECM □Throttle control ECU
51 (DI-535)	Power source voltage down (sub-throttle valve in a bad condition)	□Wire harness and connector (+B and E01 circuit) □Throttle control ECU

52 (DI-535)	Power source voltage down	□Battery □IC regulator □Wire harness and connector (+B and E01 circuit) □Throttle control ECU
61 (DI-538)	Right front speed sensor circuit	□Right front, left front, right rear and left rear speed sensor □Wire harness and connector (FRO, FLO, RRO and RLO circuit) □Throttle control ECU
62 (DI-538)	Left front speed sensor circuit	
63 (DI-538)	Right rear speed sensor circuit	
64 (DI-538)	Left rear speed sensor circuit	
71 (DI-542)	Emergency fuel cut (sub-throttle motor circuit malfunction)	□Sub-throttle valve motor □Sub-throttle valve □Throttle control ECU
72 (DI-542)	Emergency fuel cut	
81 (DI-545)	ABS ECU malfunction	□Wire harness and connector (WA circuit) □ABS ECU □Throttle control ECU
Always ON	Throttle control ECU malfunction TRAC OFF switch ON	□Throttle control ECU

DI4VT-01

PARTS LOCATION

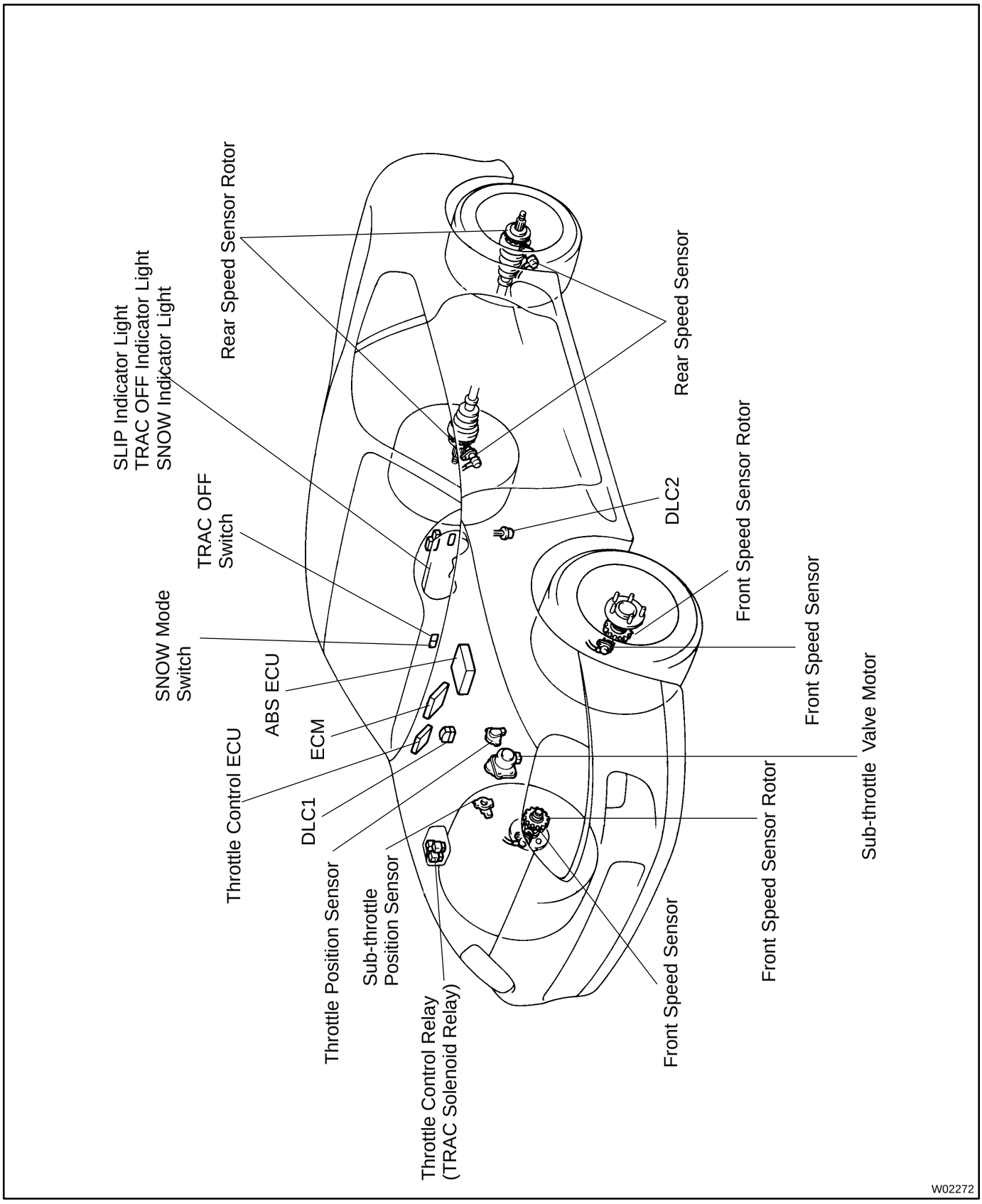

DI7HK-01

TERMINALS OF ECU

Throttle Contrl ECU

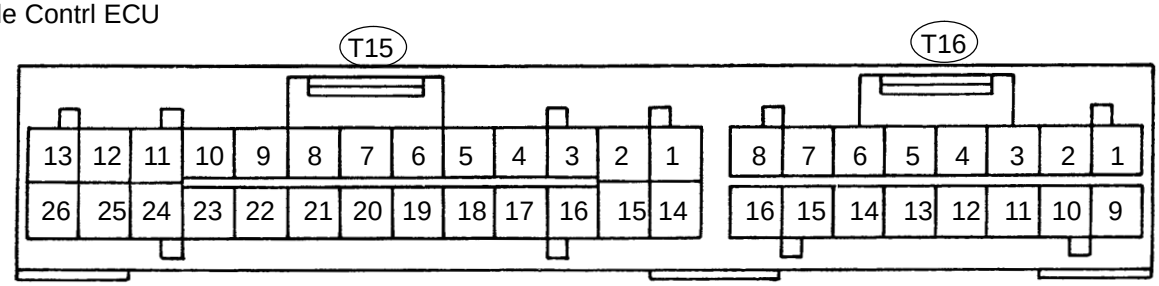

R00463

Symbols (Terminal No.)	STD Voltage (V)	Condition
BATT (T16-1) - E1 (T15-26)	9 - 14	Always
+B (T16-9) - E1 (T15-26)	9 - 14	IG switch ON, Engine stops
EFIB (T15-1) - E1 (T15-26)	9 - 14	IG switch ON, Engine stops
IDL1 (T15-4) - E1 (T15-26)	0 - 3	IG switch ON, Throttle valve fully closed
	9 - 14	IG switch ON, Throttle valve fully open
VTA1 (T15-6) - E1 (T15-26)	0.3 - 0.8	IG switch ON, Throttle valve fully closed
	3.2 - 4.9	IG switch ON, Throttle valve fully open
IDL2 (T15-3) - E1 (T15-26)	0 - 3	Engine running, Sub-throttle valve fully closed
	9 - 14	Engine running, Sub-throttle valve fully open
VTA2 (T15-19) - E1 (T15-26)	0.3 - 0.8	Engine running, Sub-throttle valve fully closed
	3.2 - 4.9	Engine running, Sub-throttle valve fully open
FRO (T16-16) - E1 (T15-26)	Pulse generation	Vehicle driving at about 30 km/h (19 mph)
FLO (T16-8) - E1 (T15-26)	Pulse generation	Vehicle driving at about 30 km/h (19 mph)
RRO (T16-15) - E1 (T15-26)	Pulse generation	Vehicle driving at about 30 km/h (19 mph)
RLO (T16-7) - E1 (T15-26)	Pulse generation	Vehicle driving at about 30 km/h (19 mph)
WT (T16-10) - E1 (T15-26)	0 - 3	IG switch ON, TRAC OFF indicator light ON
	9 - 14	IG switch ON, TRAC OFF indicator light OFF
IND (T16-2) - E1 (T15-26)	0 - 3	IG switch ON, SLIP indicator light ON
	9 - 14	IG switch ON, SLIP indicator light OFF
CSW (T16-6) - E1 (T15-26)	0 - 3	IG switch ON, TRAC OFF switch holded on pushing
	9 - 14	IG switch ON, TRAC OFF switch released
RLY+ (T16-4) - RLY- (T16-12)	9 - 14	IG switch ON
SIND (T16-11) - E1 (T15-26)	0 - 3	IG switch ON, SNOW indicator light ON
	9 - 14	IG switch ON, SNOW indicator light OFF
SNOW (T16-14) - E1 (T15-26)	0 - 3	IG switch ON, SNOW mode switch holded on pushing
	9 - 14	IG switch ON, SNOW mode switch released
A (T15-12) - E01 (T15-13)	Pulse generation	Engine running, Throttle valve fully closed
$\overline{A}$ (T15-11) - E01 (T15-13)	Pulse generation	Engine running, Throttle valve fully closed
B (T15-25) - E01 (T15-13)	Pulse generation	Engine running, Throttle valve fully closed
$\overline{B}$ (T15-24) - E01 (T15-13)	Pulse generation	Engine running, Throttle valve fully closed
NE (T15-16) - E1 (T15-26)	Pulse generation	Idling
FAIL (T15-9) - E1 (T15-26)	Pulse generation	IG switch ON (normal condition)
	9 - 14	IG switch ON (abnormal condition)
EFIF (T15-17) - E1 (T15-26)	0 - 2	IG switch ON, ECM normal condition
	4.5 - 5.5	IG switch ON, ECM abnormal condition

EFI+ (T15-7) - E1 (T15-26)	Pulse generation	IG switch ON
EFI- (T15-20) - E1 (T15-26)	Pulse generation	IG switch ON
ETC+ (T15-8) - E1 (T15-26)	Pulse generation	IG switch ON
ETC- (T15-21) - E1 (T15-26)	Pulse generation	IG switch ON
TC (T16-3) - E1 (T15-26)	4.5 - 5.5	IG switch ON, Engine stops
WA (T16-5) - E1 (T15-26)	9 - 14	IG switch ON, ABS ECU normal condition
	0 - 3	IG switch ON, ABS ECU abnormal condition

DI4VV-01

PROBLEM SYMPTOMS TABLE

If a normal code is displayed during the DTC check but the problem still occurs, check the circuits for each problem symptom in the order given in the table below and proceed to the relevant troubleshooting page.

Symptom	Inspection Circuit	See page
TRAC does not operate.	Only when inspection circuits for each problem symptom are all normal and the problem is still occurring,replace the throttle control ECU. 1. Check the DTC, reconfirming that the normal code is output. 2. Power source circuit. 3. Speed sensor circuit.	 DI-501 DI-535 DI-538
SLIP indicator light abnormal.	SLIP indicator light circuit.	DI-550
SNOW indicator light abnormal.	1. SNOW indicator light circuit. 2. SNOW made switch circuit.	DI-551 DI-551
TRAC OFF indicator light abnormal.	Only when inspection circuits for each problem symptom are all normal and the problem is still occurring,replace the throttle control ECU. 1. TRAC OFF indicator light circuit. 2. TRAC OFF switch circuit.	 DI-547 DI-547
DTC check cannot be done.	Only when inspection circuits for each problem symptom are all normal and the problem is still occurring,replace the throttle control ECU. 1. TRAC OFF indicator light circuit. 2. Tc terminal circuit.	 DI-547 DI-553

DI4VW-01

CIRCUIT INSPECTION

DTC	11, 12	Throttle Control Relay Circuit

CIRCUIT DESCRIPTION

DTC No.	DTC Detecting Condition	Trouble Area
11	Instead of throttle control relay is ON, voltage at +B of ECU terminal does not output 4 V or more for 1 sec. or more.	□Throttle control relay □TRAC fuse □Wire harness and connector (throttle control relay circuit) □Throttle control ECU
12	Instead of throttle control relay is OFF, voltage at +B of ECU terminal outputs 4 V or more for 2 sec. or more.	□Throttle control relay □Wire harness and connector (throttle control relay circuit) □Throttle control ECU

WIRING DIAGRAM

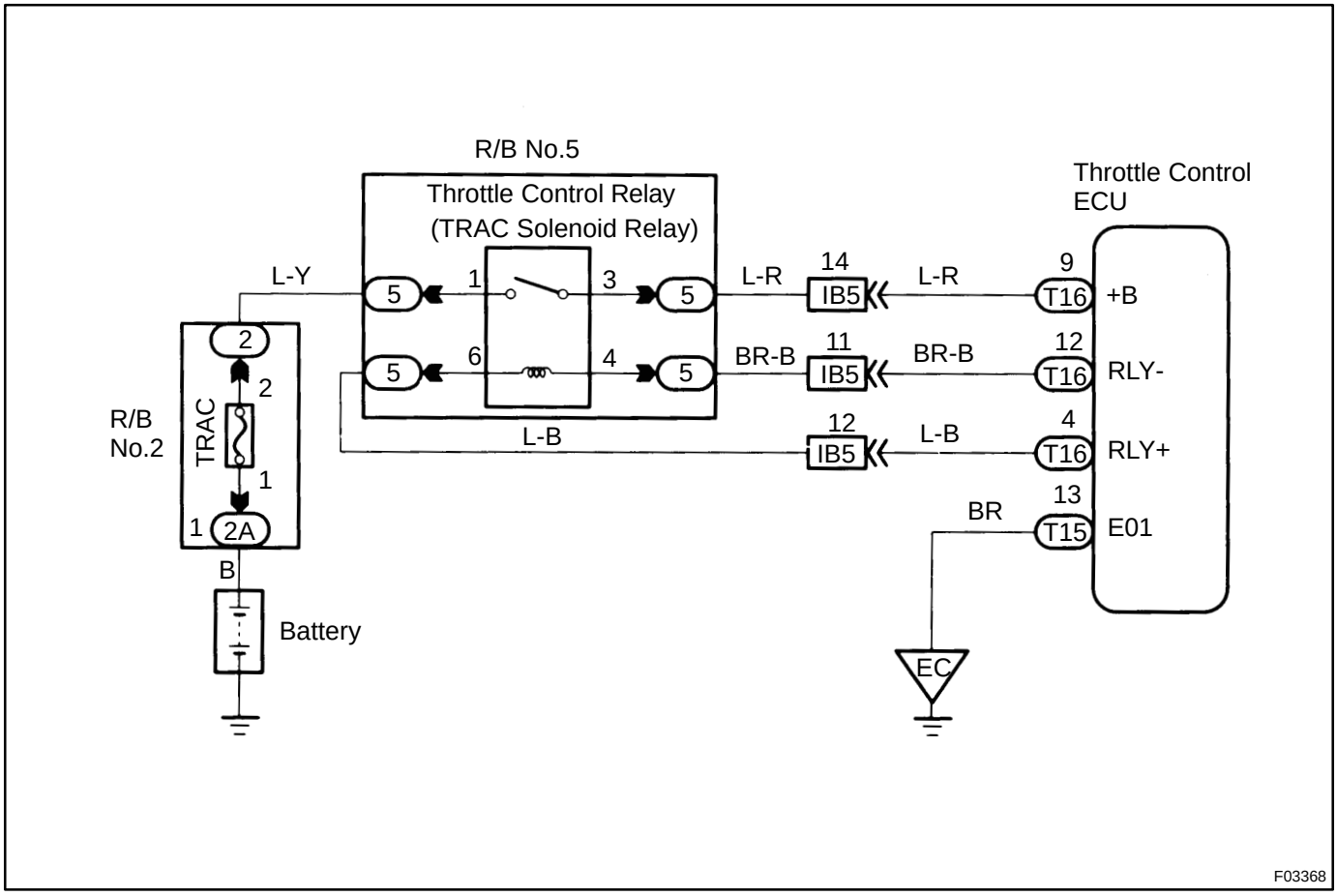

INSPECTION PROCEDURE

1	Check TRAC fuse.

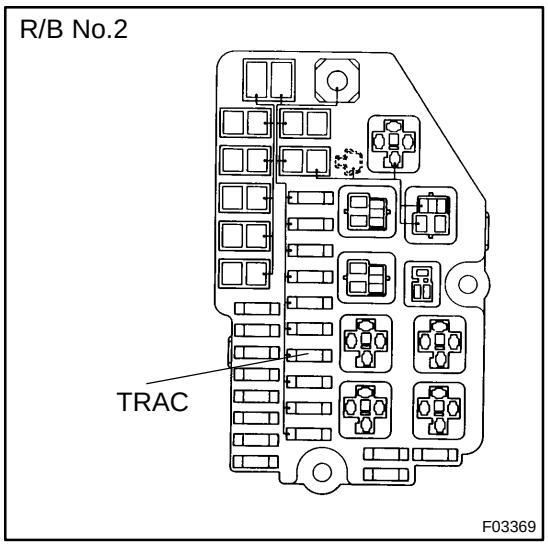

PREPARATION:
Remove TRAC fuse from R/B No.2.
CHECK:
Check continuity of TRAC fuse.
OK:
Continuity

NG → **Check for short in all harness and components connected to TRAC fuse.**

OK ↓

2	Check voltage between terminal 1 of R/B No.5 (for throttle control relay).

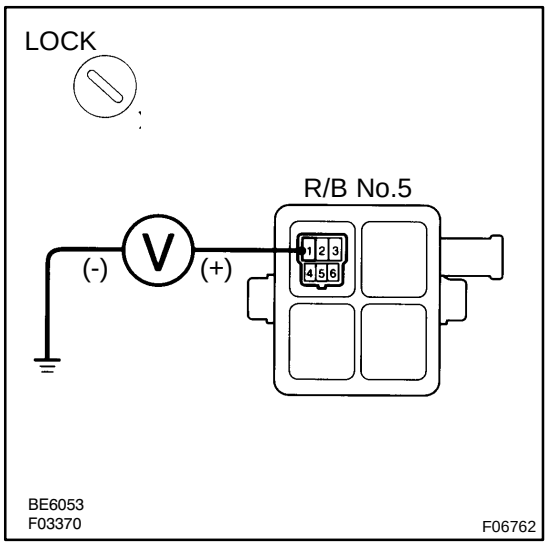

PREPARATION:
Remove throttle control relay from P/B No.5.
CHECK:
Measure voltage between terminal 1 of R/B No.5 (for throttle control relay).
OK:
Voltage: 10 - 14 V

NG → **Repair or replace harness or connector.**

OK ↓

3	**Check throttle control relay.**

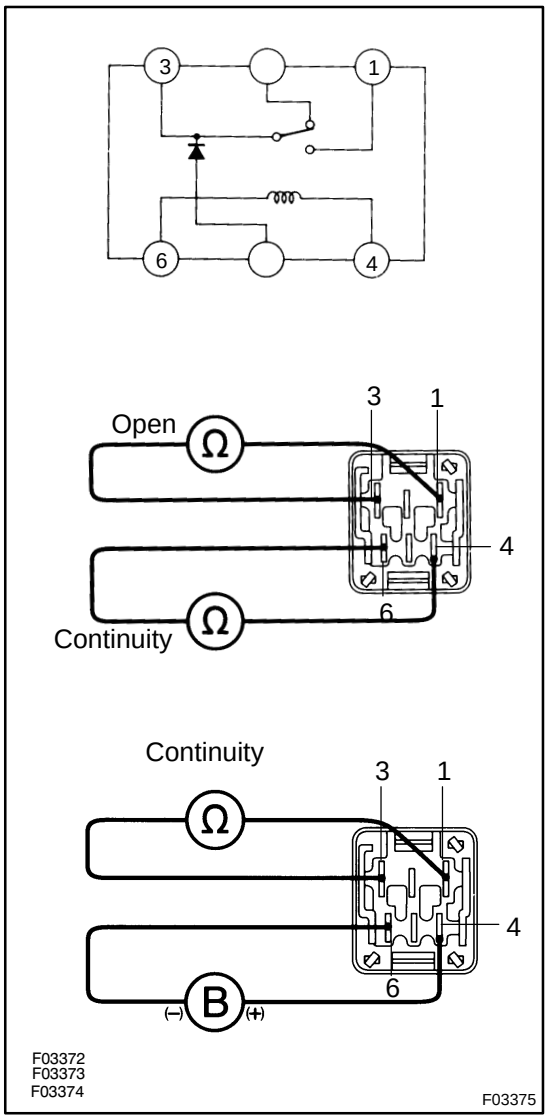

PREPARATION:

Remove throttle control relay from R/B No.5

CHECK:

Check continuity between each terminal of throttle control relay.

OK:

Terminals 4 and 6	Continuity (Reference value 80 Ω)
Terminals 1 and 3	Open

CHECK:

(a) Apply battery voltage between terminals 4 and 6.

(b) Check continuity between terminals.

OK:

Terminals 1 and 3	Continuity

NG → **Replace throttle control relay.**

OK

4	**Check for open and short in harness and connector between throttle control relay and throttle control ECU (See page IN-28).**

NG → **Repair or replace harness or connector.**

OK

If the same code is still output after the DTC is deleted, check the contact condition of each connection.
If the connections are normal, the ECU may be defective.

DI4VX-01

DTC	21, 22	Sub-Throttle Valve Motor Circuit

CIRCUIT DESCRIPTION

DTC No.	DTC Detecting Condition	Trouble Area
21	Sub-throttle valve motor circuit is open or short.	□Sub-throttle valve motor □Wire harness and connector (sub-throttle valve motor and E01 circuit) □Throttle control ECU
22	In case the sub-throttle valve open angle is tilted.	□Sub-throttle valve motor □Sub-throttle valve □Sub-throttle position senor □Wire harness and connector (E1 circuit) □Throttle control ECU

WIRING DIAGRAM

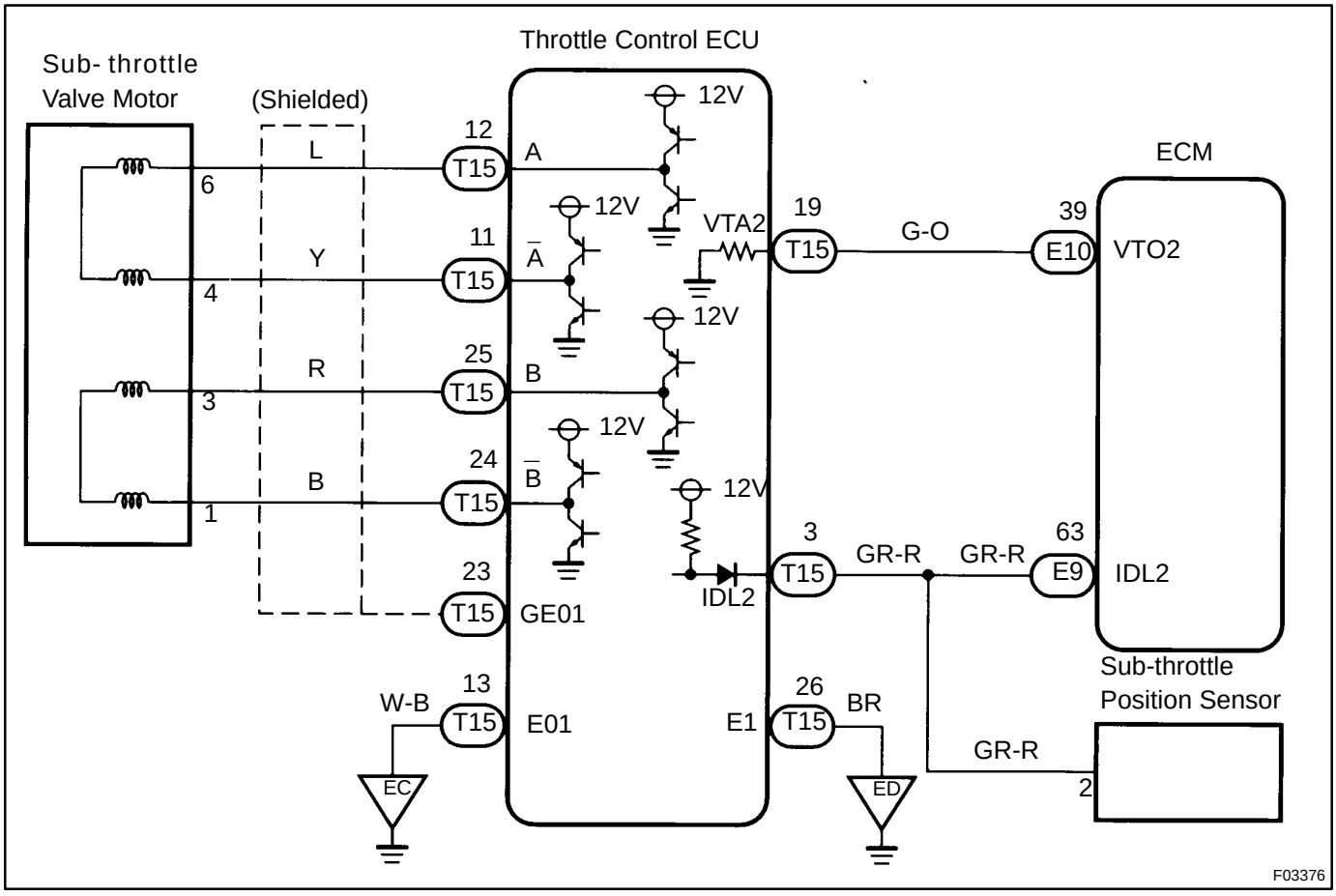

INSPECTION PROCEDURE

1	Check sub-throttle valve motor.

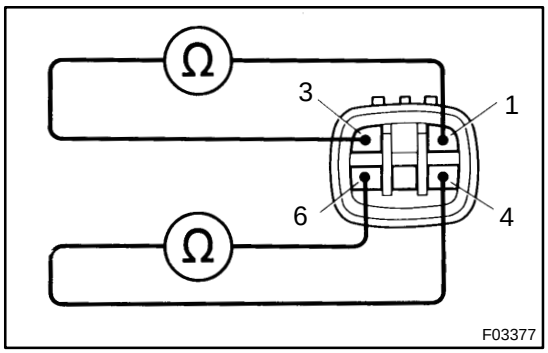

PREPARATION:
Disconnect sub-throttle valve motor connector.
CHECK:
Check continuity between each terminal of sub-throttle valve motor connector.
OK:

Terminals 1 and 3	Continuity (Reference value 0.40 - 0.48 Ω)
Terminals 4 and 6	

NG → **Replace sub-throttle valve motor.**

OK

2	Check voltage between terminal IDL2 of throttle control ECU and body ground.

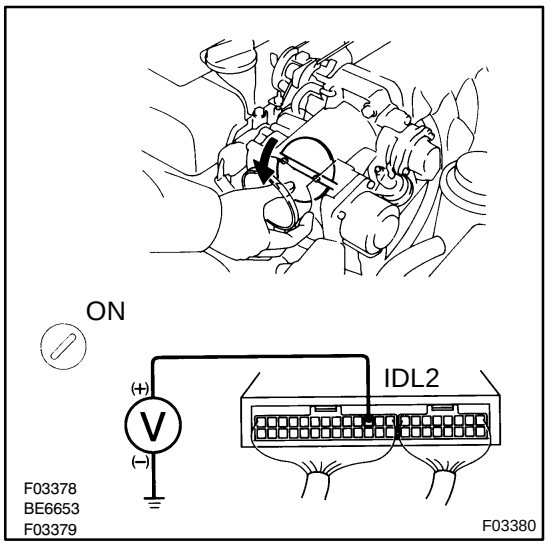

PREPARATION:
(a) Remove throttle control ECU with connectors still connected.
(b) Remove intake air duct.
(c) Disconnect sub-throttle valve motor connector.
(d) Turn ignition switch ON.
CHECK:
Measure voltage between terminal IDL2 of throttle control ECU and body ground, when the sub-throttle valve is fully closed and fully open.
OK:

Sub-throttle valve position	Voltage
Fully closed	0 - 3 V
Fully open	9 - 14 V

OK → **Go to step 4.**

NG

3	Check for open and short in harness and connector between terminal IDL2 of throttle control ECU and sub-throttle position sensor (See page IN-28).

NG → Repair or replace harness or connector.

OK →

Check and replace throttle control ECU.

4	Check sub-throttle position sensor (See page DI-243).

NG → Adjust or replace sub-throttle position sensor (See page SF-44).

OK →

5	Check for open and short in harness and connector between terminals E01, E1 of throttle control ECU and body ground (See page IN-28).

NG → Repair or replace harness or connector.

OK →

Check and replace throttle control ECU.

DI4VY-01

DTC	23	Throttle Body Malfunction

CIRCUIT DESCRIPTION

DTC No.	DTC Detecting Condition	Trouble Area
23	In case the sub-throttle valve is fully open or full close angle become smaller.	□Sub-throttle valve □Sub-throttle position senor □Throttle control ECU

WIRING DIAGRAM

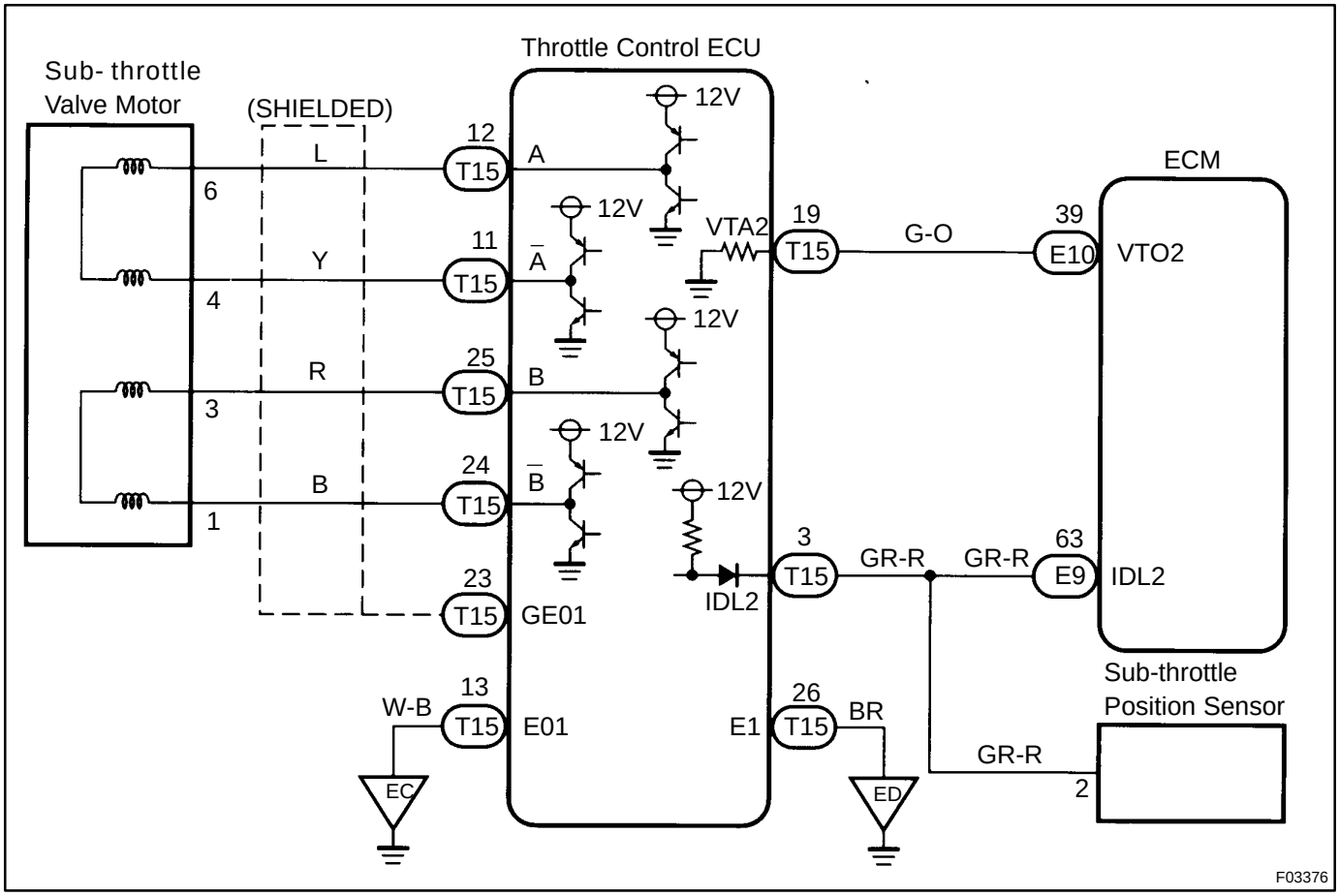

INSPECTION PROCEDURE

1	**Check voltage between terminal IDL2 of throttle control ECU and body ground.**

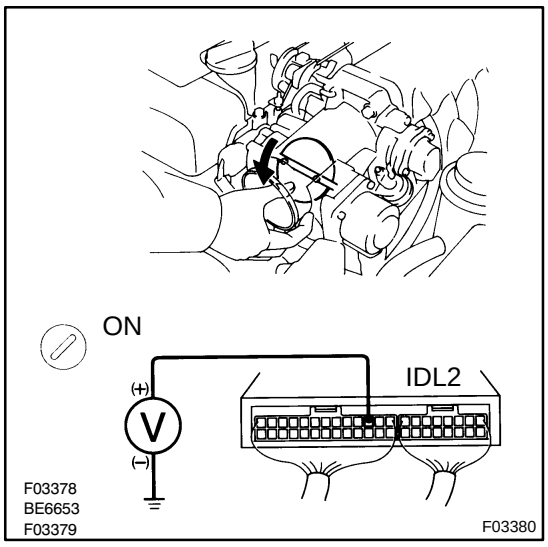

PREPARATION:

(a) Remove throttle control ECU with connectors still connected.
(b) Remove intake air duct.
(c) Disconnect sub-throttle valve motor connector.
(d) Turn ignition switch ON.

CHECK:

Measure voltage between terminal IDL2 of throttle control ECU and body ground, when the sub-throttle valve is fully closed and fully open.

OK:

Sub-throttle valve position	Voltage
Fully closed	0 - 3 V
Fully open	9 - 14 V

OK → **Go to step 3.**

NG

2	**Check for open and short in harness and connector between terminal IDL2 of throttle control ECU and sub-throttle position sensor (See page IN-28).**

NG → **Repair or replace harness or connector.**

OK

Check and replace throttle control ECU.

3	Check sub-throttle position sensor (See page DI-243).

NG → Adjust or replace sub-throttle position sensor (See page SF-44).

OK →

Check and replace throttle control ECU.

DI4VZ-01

DTC	24	Sub-Throttle Position Sensor Leakage/ Sub-Throttle Valve Stuck

CIRCUIT DESCRIPTION

DTC No.	DTC Detecting Condition	Trouble Area
24	Instead of sub-throttle valve motor is driven fully open, voltage at VTA2 of ECU terminal does not output 3.2 V to 4.9 V or more.	□Sub-throttle valve □Sub-throttle position senor □Wire harness and connector (E1 circuit) □Throttle control ECU

WIRING DIAGRAM

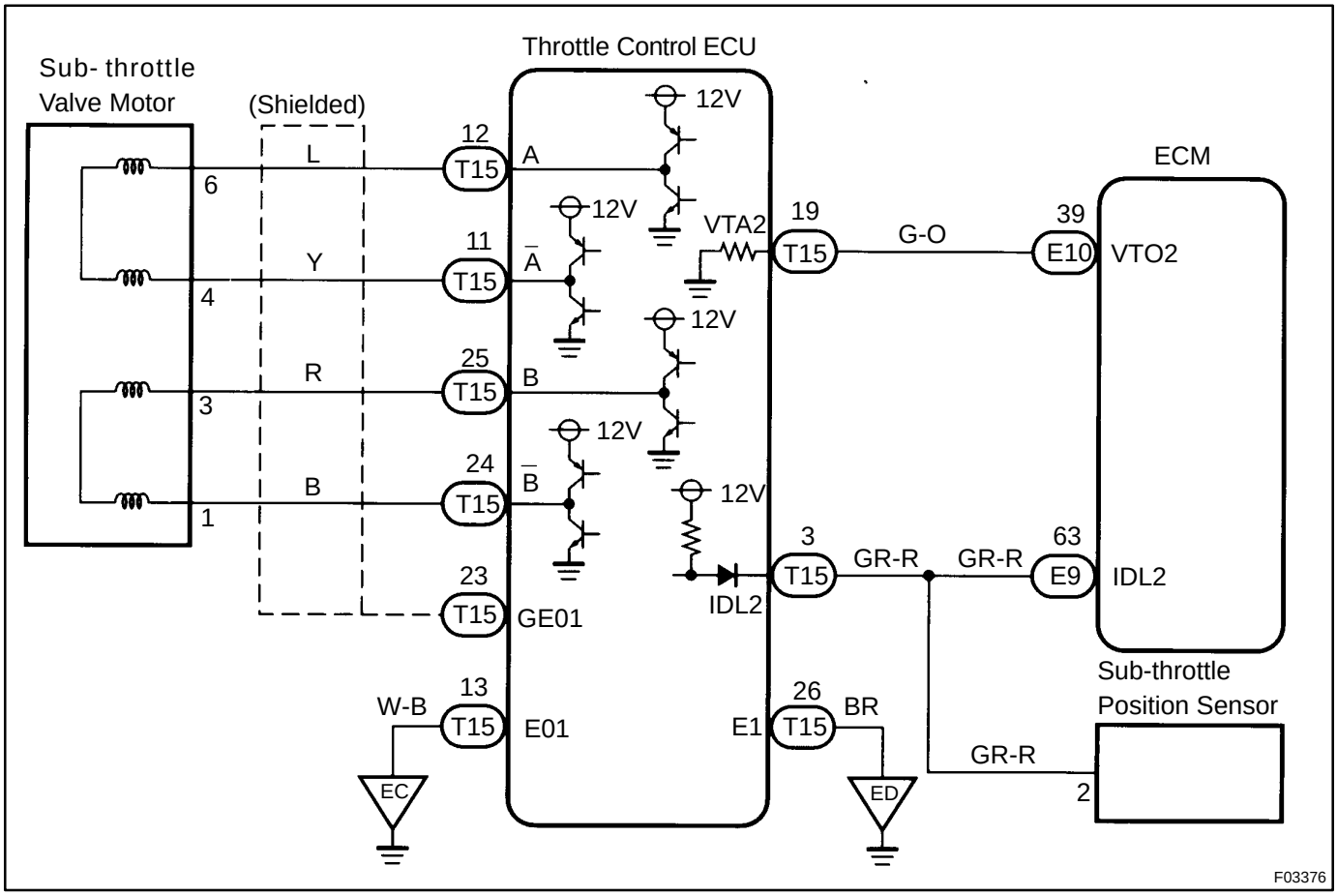

INSPECTION PROCEDURE

1	**Check voltage between terminal VTA2 of throttle control ECU and body ground.**

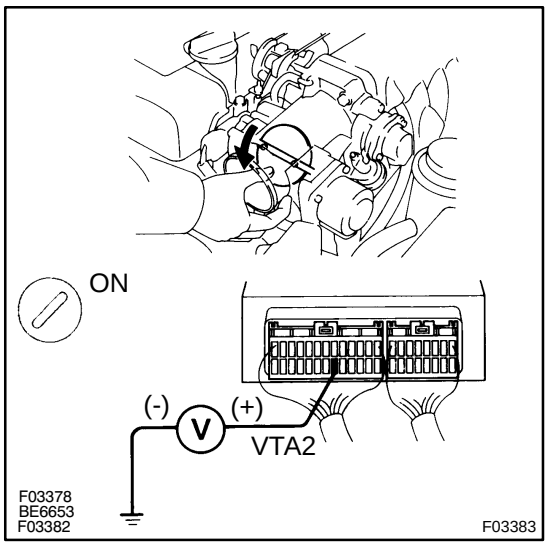

PREPARATION:

(a) Remove throttle control ECU with connectors still connected.
(b) Remove intake air duct.
(c) Disconnect sub-throttle valve motor connector.
(d) Turn ignition switch ON.

CHECK:

Measure voltage between terminal VTA2 of throttle control ECU and body ground, when the sub-throttle valve is fully closed and fully open.

OK:

Sub-throttle valve position	Voltage
Fully closed	0.3 - 0.8 V
Fully open	3.2 - 4.9 V

OK → **Go to step 3.**

NG

2	**Check for open and short in harness and connector between terminal VTA2 of throttle control ECU and terminal VTO2 of ECM (See page IN-28).**

NG → **Repair or replace harness or connector.**

OK

Check and replace throttle control ECU.

3	**Check sub-throttle position sensor (See page DI-243).**

NG → **Adjust or replace sub-throttle position sensor (See page SF-44).**

OK

4	**Check for open and short in harness and connector between terminal E1 of throttle control ECU and body ground (See page IN-28).**

NG → **Repair or replace harness or connector.**

OK

Check and replace throttle control ECU.

DI4W0-01

DTC	31	Throttle Position Sensor Circuit

CIRCUIT DESCRIPTION

This circuit is not directly related to the TRAC control, but as it has an influence on TRAC control when trouble occurs in this circuit, it is used to switch off the TRAC system as a fail safe function.

DTC No.	DTC Detecting Condition	Trouble Area
31	Throttle position sensor circuit is open circuit and E1 or +B circuit is short for 0.5 sec. or more.	□Throttle position senor □Wire harness and connector (throttle position sensor and E1 circuit) □Throttle control ECU

WIRING DIAGRAM

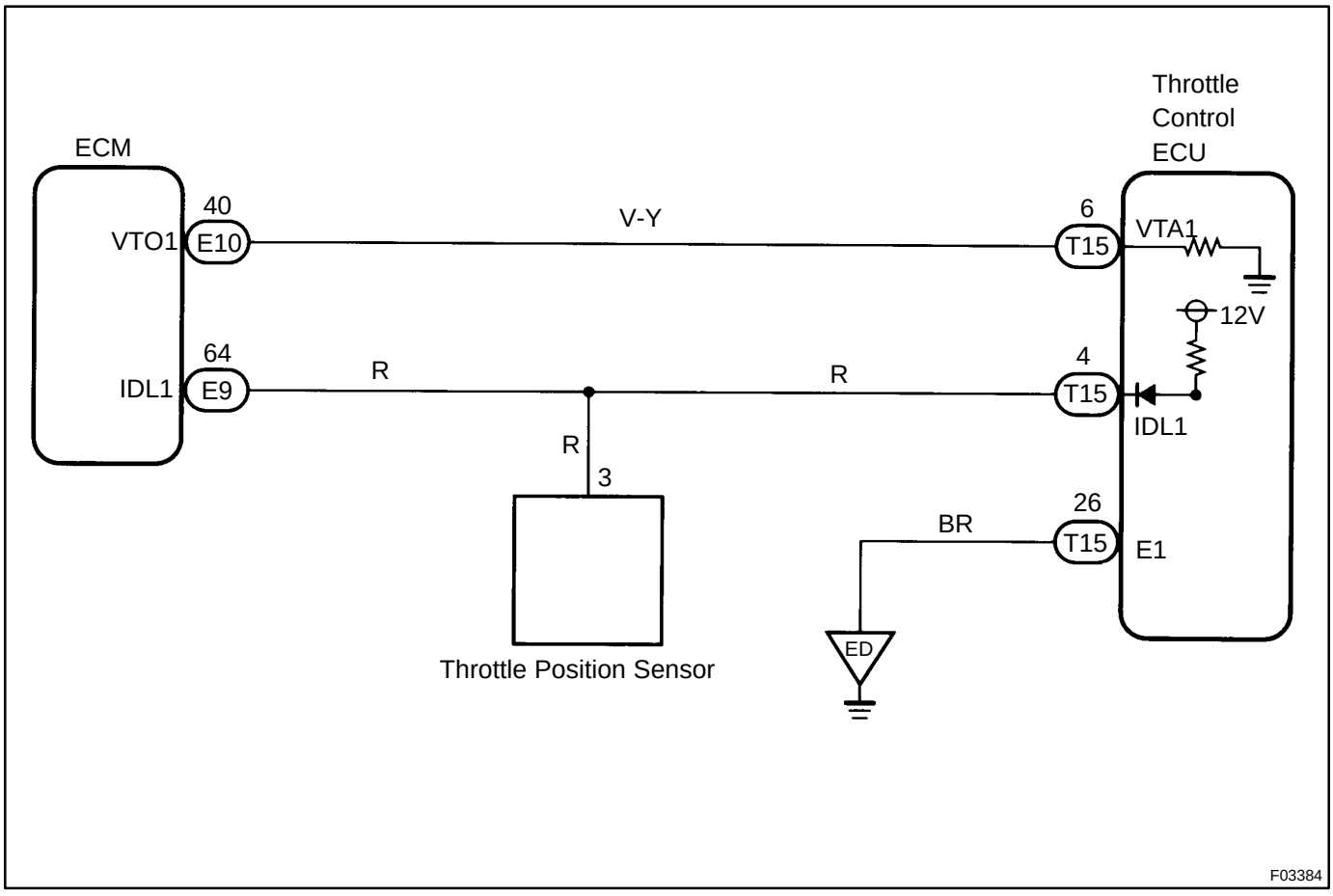

INSPECTION PROCEDURE

HINT:

The main throttle position sensor signal is transmitted to the throttle control ECU from ECM, so if an error occurs at the engine side, the throttle control ECU also detects it.

If DTC No. P0120 or P0121 is being output for the engine, troubleshoot the engine first.

1	**Is DTC output for the engine?**

Check DTC on page DI-147 .

YES → **Repair circuit indicated by the code output.**

NO

2	**Check voltage between terminal IDL1 of throttle control ECU and body ground.**

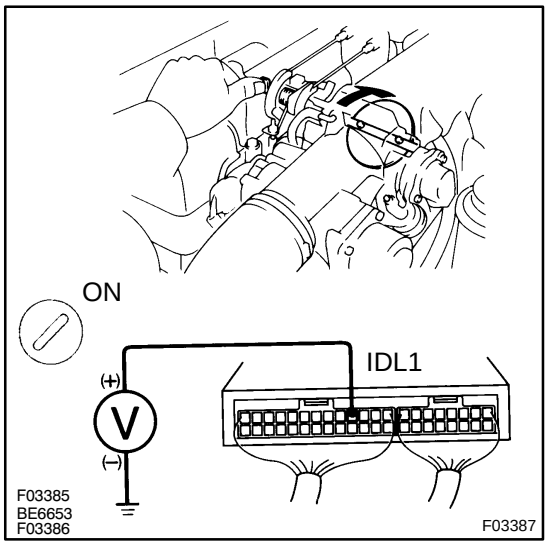

PREPARATION:

(a) Remove throttle control ECU with connectors still connected.

(b) Disconnect the vacuum hose from the throttle opener, and apply vacuum to the throttle opener.

(c) Turn ignition switch ON.

CHECK:

Measure voltage between terminal IDL1 of throttle control ECU and body ground, when the throttle valve is fully closed and fully open.

OK:

Throttle valve position	Voltage
Fully closed	0 - 3 V
Fully open	9 - 14 V

OK → **Go to step 4.**

NG

3	**Check for open and short in harness and connector between terminal IDL1 of throttle control ECU and throttle position sensor (See page IN-28).**

NG → **Repair or replace harness or connector.**

OK

Check and replace throttle control ECU.

4	**Check voltage between terminal VTA1 of throttle control ECU and body ground.**

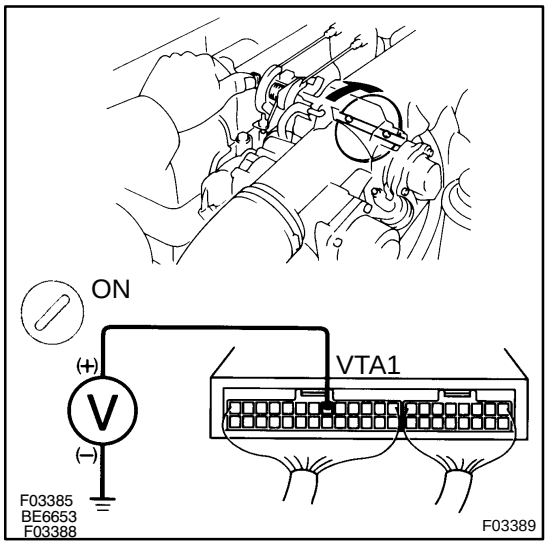

PREPARATION:

(a) Remove throttle control ECU with connectors still connected.

(b) Disconnect the vacuum hose from the throttle opener, and apply vacuum to the throttle opener.

(c) Turn ignition switch ON.

CHECK:

Measure voltage between terminal VTA1 of throttle control ECU and body ground, when the throttle valve is fully closed and fully open.

OK:

Throttle valve position	Voltage
Fully closed	0.3 - 0.8 V
Fully open	3.2 - 4.9 V

OK → **Go to step 6.**

NG

5	Check for open and short in harness and connector between terminals VTA1 of throttle control ECU and VTO1 of ECM (See page IN-28).

NG → Repair or replace harness or connector.

OK →

Check and replace throttle control ECU.

6	Check throttle position sensor (See page SF-44).

NG → Adjust or replace throttle position sensor (See page SF-44).

OK →

7	Check for open and short in harness and connector between terminal E1 of throttle control ECU and body ground (See page IN-28).

NG → Repair or replace harness or connector.

OK →

Check and replace throttle control ECU.

DI4W1-01

DTC	32	Sub-Throttle Position Sensor Circuit

CIRCUIT DESCRIPTION

This sensor detects the opening angle of the sub-throttle valve and sends the appropriate signals to the ECU. If a trouble signal is input, the ECU prohibits TRAC control.

DTC No.	DTC Detecting Condition	Trouble Area
32	Conditions (1) and (2) continue for 0.5 sec. or more: (1) Sub-throttle position sensor circuit is open and E1 or +B circuit is short. (2) Instead of sub-throttle valve motor is driven fully close, IDL2 of sub-throttle position sensor will not come ON.	□Sub-throttle position senor □Sub-throttle valve motor □Sub-throttle valve □Wire harness and connector (sub-throttle position sensor and E1 circuit) □Throttle control ECU

WIRING DIAGRAM

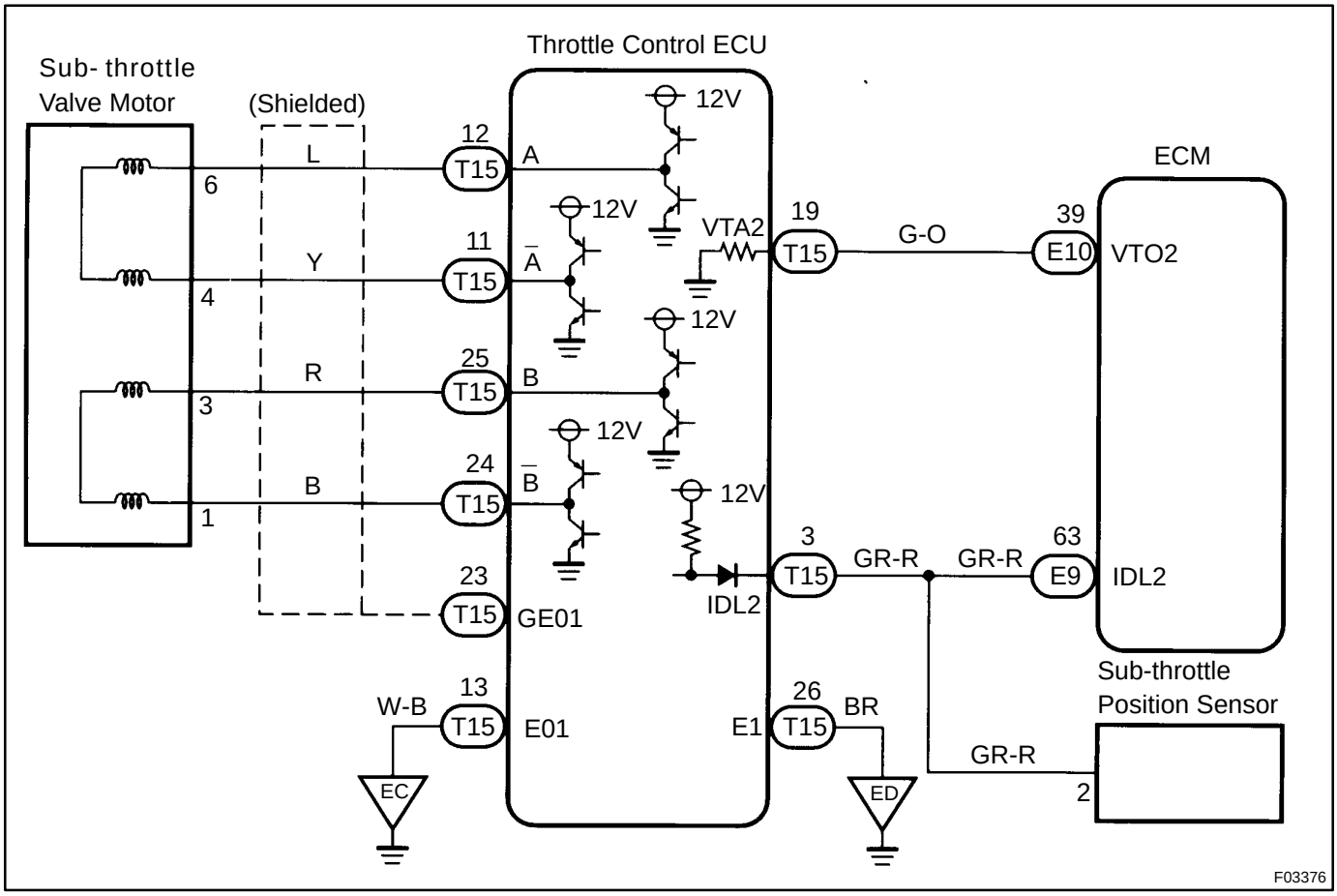

INSPECTION PROCEDURE

HINT:

The sub-throttle position sensor signal is transmitted to the throttle control ECU from ECM, so if an error occurs at the engine side, the throttle control ECU also detects it.

If DTC No. P1400 or P1401 is being output for the engine, troubleshoot the engine first.

1	**Is DTC output for the engine?**

Check DTC on page DI-147 .

YES → **Repair circuit indicated by the code output.**

NO

2	**Check voltage between terminal IDL2 of throttle control ECU and body ground.**

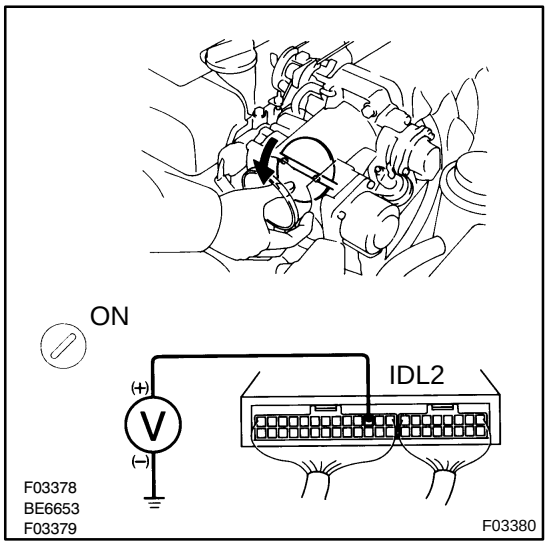

PREPARATION:

(a) Remove throttle control ECU with connectors still connected.
(b) Remove intake air duct.
(c) Disconnect sub-throttle valve motor connector.
(d) Turn ignition switch ON.

CHECK:

Measure voltage between terminal IDL2 of throttle control ECU and body ground, when the sub-throttle valve is fully closed and fully open.

OK:

Sub-throttle valve position	Voltage
Fully closed	0 - 3 V
Fully open	9 - 14 V

OK → **Go to step 4.**

NG

3	**Check for open and short in harness and connector between terminal IDL2 of throttle control ECU and sub-throttle position sensor (See page IN-28).**

NG → **Repair or replace harness or connector.**

OK

4	Check voltage between terminal VTA2 of throttle control ECU and body ground.

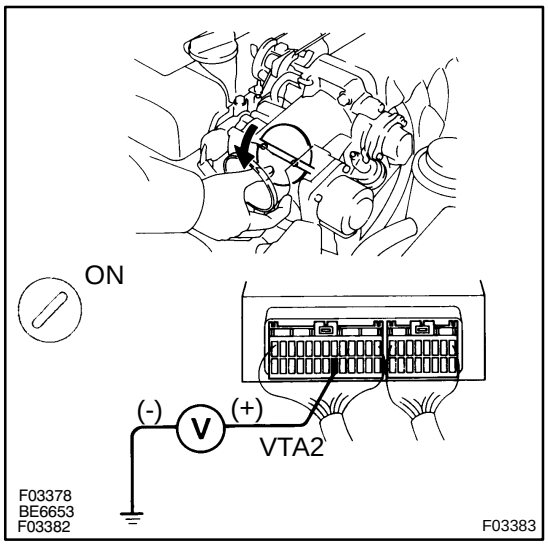

PREPARATION:

(a) Remove throttle control ECU with connectors still connected.
(b) Remove intake air duct.
(c) Disconnect sub-throttle valve motor connector.
(d) Turn ignition switch ON.

CHECK:

Measure voltage between terminal VTA2 of throttle control ECU and body ground, when the sub-throttle valve is fully closed and fully open.

OK:

Sub-throttle valve position	Voltage
Fully closed	0.3 - 0.8 V
Fully open	3.2 - 4.9 V

OK → **Go to step 6.**

NG

5	Check for open and short in harness and connector between terminals VTA2 of throttle control ECU and VTO2 of ECM (See page IN-28).

NG → **Repair or replace harness or connector.**

OK

Check and replace throttle control ECU.

6	Check sub-throttle position sensor (See page DI-243).

NG → **Adjust or replace sub-throttle position sensor (See page SF-44).**

OK

7	**Check sub-throttle valve motor.**

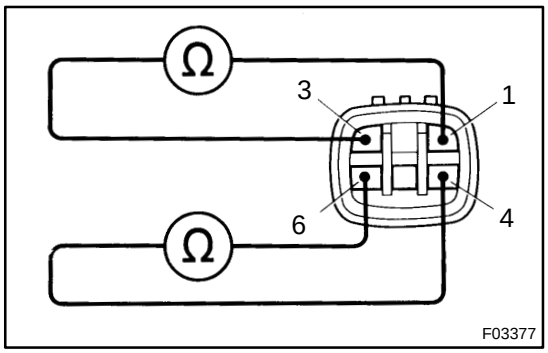

PREPARATION:

Disconnect sub-throttle valve motor connector.

CHECK:

Check continuity between each terminal of sub-throttle valve motor connector.

OK:

Terminals 1 and 3	Continuity (Reference value 0.40 - 0.48 Ω)
Terminls 4 and 6	

NG → **Replace sub-throttle valve motor.**

OK

8	**Check for open and short in harness and connector between terminal E1 of throttle control ECU and body ground (See page IN-28).**

NG → **Repair or replace harness or connector.**

OK

Check and replace throttle control ECU.

DI4W2-01

DTC	41	NE Signal Circuit

CIRCUIT DESCRIPTION

The throttle control ECU receives engine speed signals (NE signals) from the ECM.

DTC No.	DTC Detecting Condition	Trouble Area
41	While engine is running, throttle control ECU detected 0 rpm signal for 0.8 sec. or more.	□Wire harness and connector (NE circuit) □ECM □Throttle control ECU

WIRING DIAGRAM

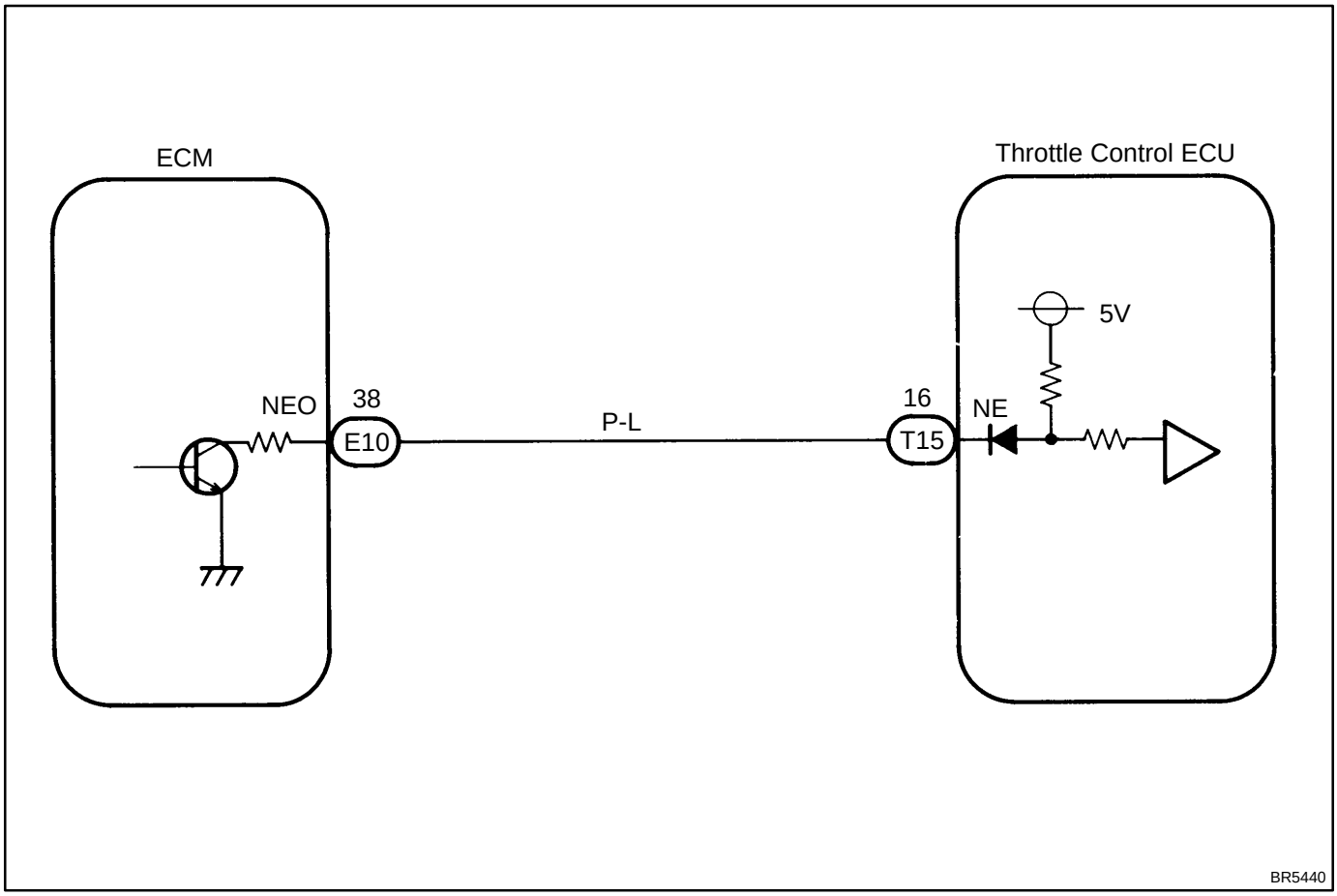

INSPECTION PROCEDURE

HINT:

If DTC No. P0335 is being output for the engine, troubleshoot the engine first.

1	**Check for open and short in harness and connector between terminal NE of throttle control ECU and terminal NEO of ECM (See page IN-28).**

NG → **Repair or replace harness or connector.**

OK

2	**Check voltage between terminal NE of throttle control ECU and body ground.**

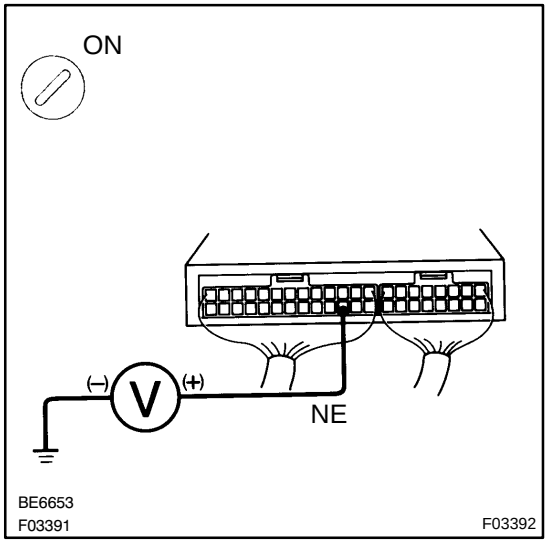

PREPARATION:

(a) Remove throttle control ECU with connectors still connected.

(b) Turn ignition switch ON.

CHECK:

Measure voltage between terminal NE of throttle control ECU and body ground for the engine conditions below.

OK:

Engine condition	Voltage
OFF (IG ON)	3 - 6 V or below 1 V
ON (Idling)	2 - 3 V (Pulse)

(Reference)

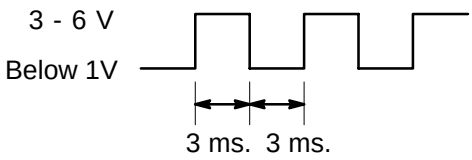

NG → **Check and replace ECM.**

OK

Check and replace throttle control ECU.

DI4W3-01

DTC	42	Engine Control System Malfunction

CIRCUIT DESCRIPTION

If trouble in the engine control system causes the malfunction indicator light to light up, this information is transmitted from the ECM to the throttle control ECU. Then throttle control ECU may prohibit TRAC control as a result.

DTC No.	DTC Detecting Condition	Trouble Area
42	ECM detected malfunction signal ON (output voltage at terminal EFIF is 4.5 V or more, or 5.5 V or less for 1 sec. or more).	□Wire harness and connector (EFIF circuit) □ECM □Throttle control ECU

WIRING DIAGRAM

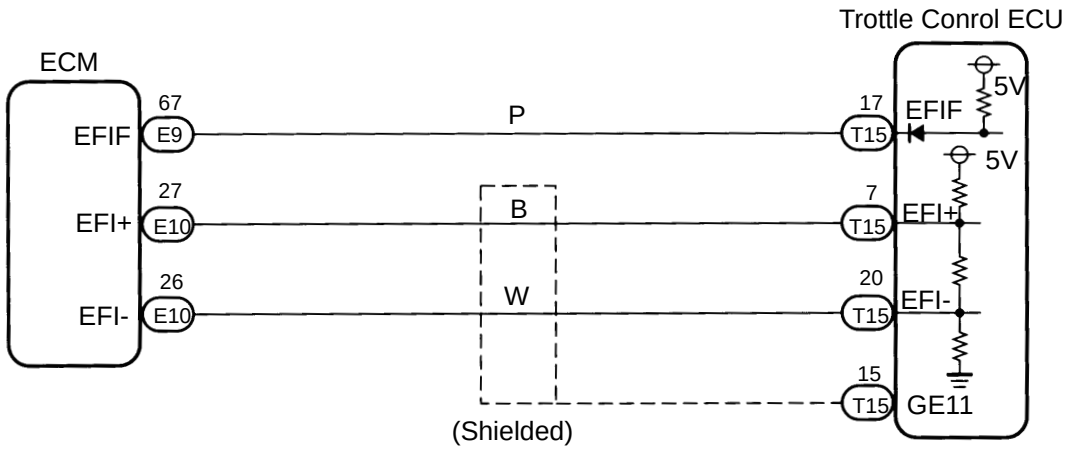

INSPECTION PROCEDURE

1	**Check the DTC for the engine (See page DI-147).**

*1	**Repair engine control system according to the code output.**

*2

*1: Output NG code
*2: Malfunction indicator light remains ON

2	**Check for open and short in harness and connector between terminal EFIF of throttle control ECU and terminal EFIF of ECM (See page IN-28).**

NG → **Repair or replace harness or connector.**

OK

Check and replace throttle control ECU.

DI4W4-01

DTC	43	ECM Communication Circuit Malfunction

CIRCUIT DESCRIPTION

DTC No.	DTC Detecting Condition	Trouble Area
43	ECM normal communication data is not received for 5 sec. or more.	□Wire harness and connector (EFI+ and EFI- circuit) □ECM □Throttle control ECU

WIRING DIAGRAM

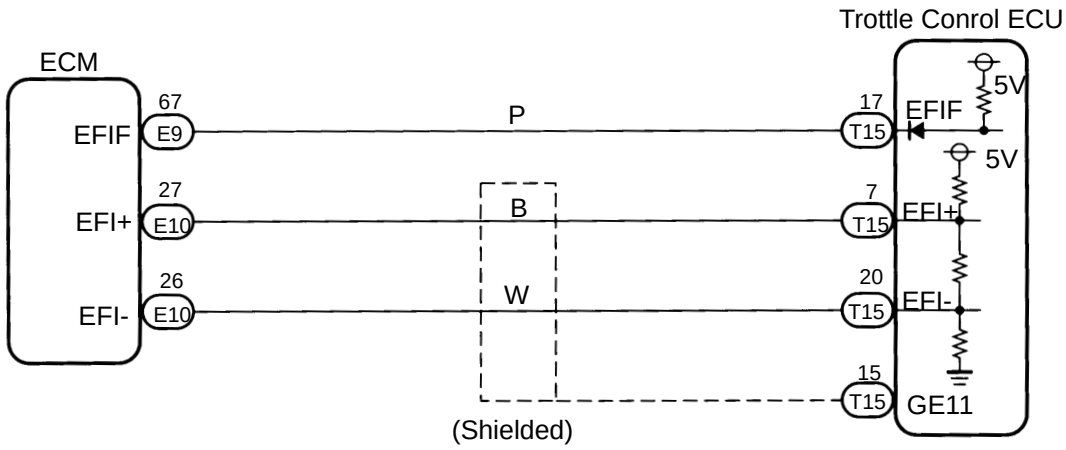

INSPECTION PROCEDURE

1	**Check for open and short in harness and connector between terminals EFI+ and EFI- of throttle control ECU and ECM (See page IN-28).**

NG → **Repair or replace harness or connector.**

OK

Check and replace ECM or throttle control ECU.

DI4W5-01

DTC	51, 52	Power Source Circuit

CIRCUIT DESCRIPTION

DTC No.	DTC Detecting Condition	Trouble Area
51	In case power source voltage comes down, sub-throttle valve angle difference occurs.	□Wire harness and connector (+B and E01 circuit) □Throttle control ECU
52	Engine speed is 500 rpm or more and throttle relay is ON and ECU terminal +B voltage is less than 8 V for 10 sec. or more.	□Battery □IC regulator □Wire harness and connector (+B and E01 circuit) □Throttle control ECU

WIRING DIAGRAM

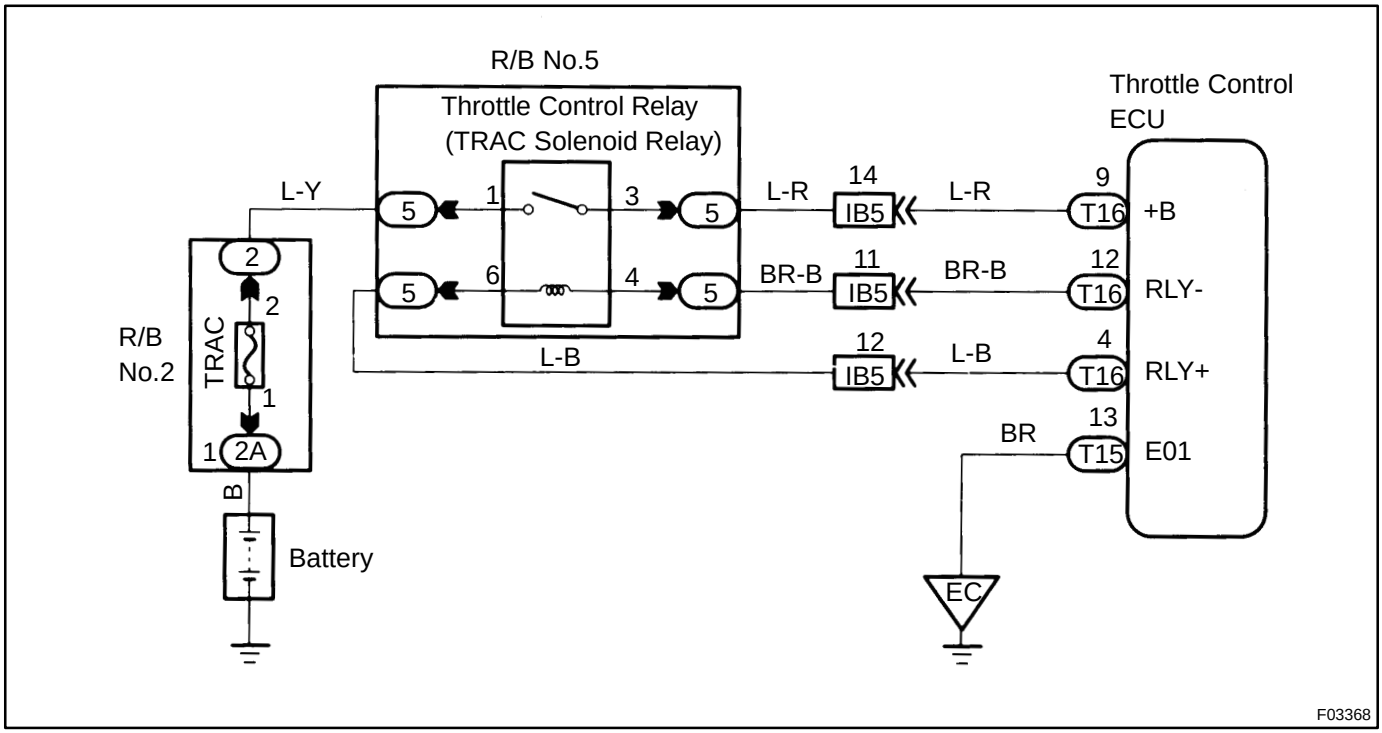

INSPECTION PROCEDURE

1	**Check battery positive voltage.**

OK:

Voltage: 10 - 14 V

NG → **Check and repair the charging system.**

OK

2	**Check for open and short in harness and connector between terminal +B of throttle control ECU and throttle control relay (See page IN-28).**

NG → **Repair or replace harness or connector.**

OK

3	**Check voltage between terminals +B and E01 of throttle control ECU connector.**

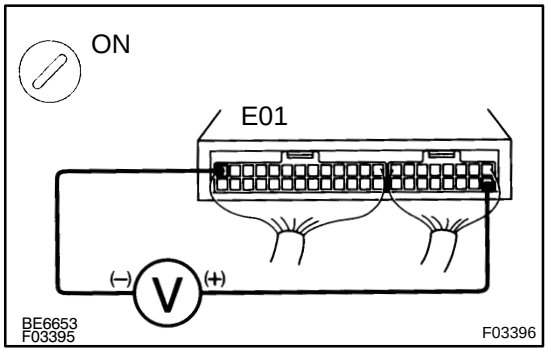

PREPARATION:

(a) Remove throttle control ECU with connectors still connected.

(b) Turn ignition switch ON.

CHECK:

Measure voltage between terminals +B and E01 of throttle control ECU connector.

OK:

Voltage: 9 - 14 V

OK → **Check and replace throttle control ECU.**

NG

4	**Check continuity between terminal E01 of throttle control ECU connector and body ground.**

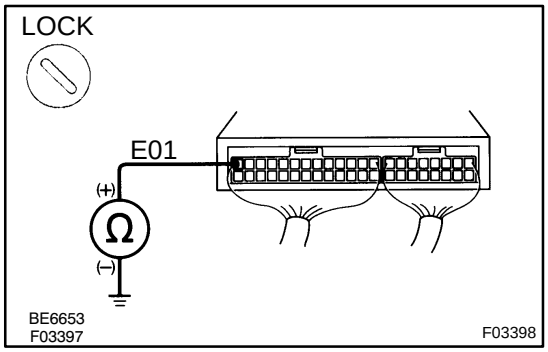

CHECK:

Measure resistance between terminal E01 of throttle control ECU connector and body ground.

OK:

Resistance: 1 Ω or less

NG → **Repair or replace harness or connector.**

OK

Check for open in harness and connector between throttle control ECU and battery (See page IN-28).

DI4W6-01

DTC	61, 62, 63, 64	Speed Sensor Circuit

CIRCUIT DESCRIPTION

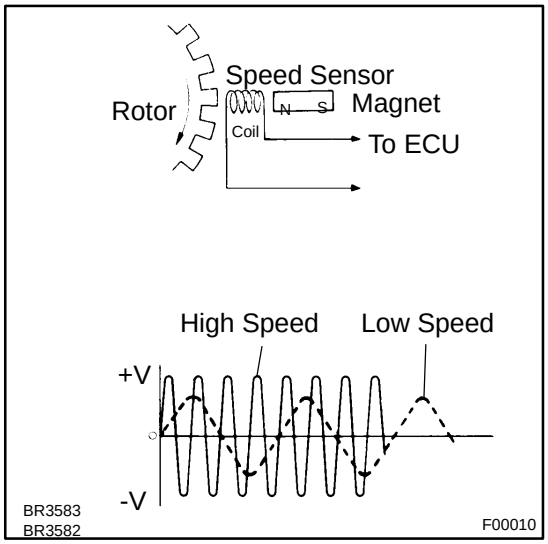

The speed sensor detects the wheel speed and sends the appropriate signals to the ECU. These signals are used to control both the ABS and TRAC control systems. The front and rear rotors each have 48 serrations.
When the rotors rotate, the magnetic field emitted by the permanent magnet in the speed sensor generates an AC voltage. Since the frequency of this AC voltage changes in direct proportion to the speed of the rotor, the frequency is used by the ECU to detect the speed of each wheel.

DTC No.	DTC Detecting Condition	Trouble Area
61,62,63,64	When the brake switch is OFF, one of the symmetrical wheels' speed becomes one eight or less of the slowest speed of other 3 wheels continuously for 10 sec. or more.	□Right front, left front, right rear and left rear speed sensor □Wire harness and connector (FRO, FLO, RRO and RLO circuit) □Throttle control ECU

HINT:
DTC No.61 is for the right front speed sensor.
DTC No.62 is for the left front speed sensor.
DTC No.63 is for the right rear speed sensor.
DTC No.64 is for the left rear speed sensor.

WIRING DIAGRAM

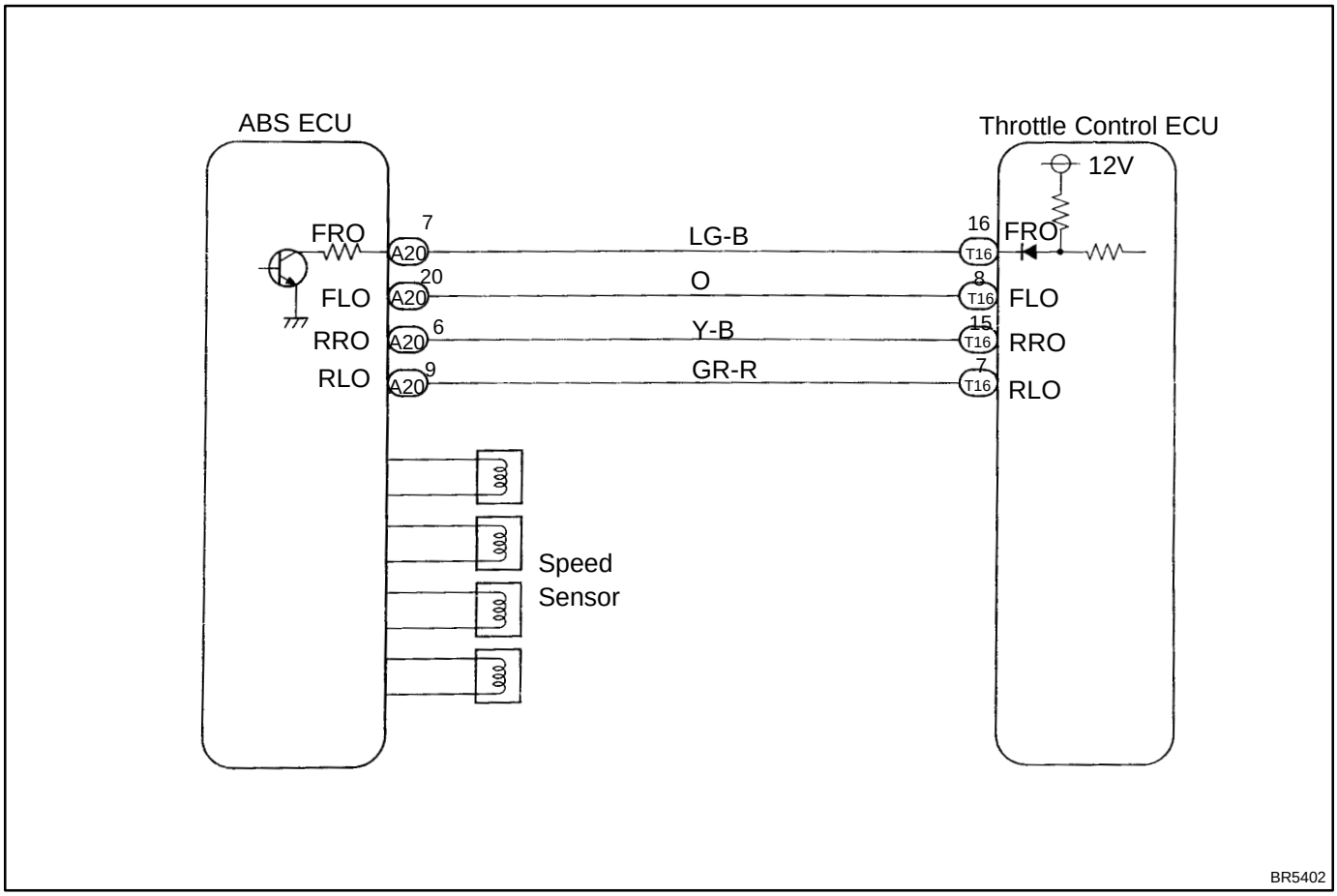

INSPECTION PROCEDURE

HINT:

If the DTC is output from the ABS warning light, troubleshoot the ABS first.

1	**Check for open and short in harness and connector between terminals FRO, FLO, RRO, RLO of ABS ECU and throttle control ECU (See page IN-28).**

NG → **Repair or replace harness or connector.**

OK

2	**Check speed sensor.**

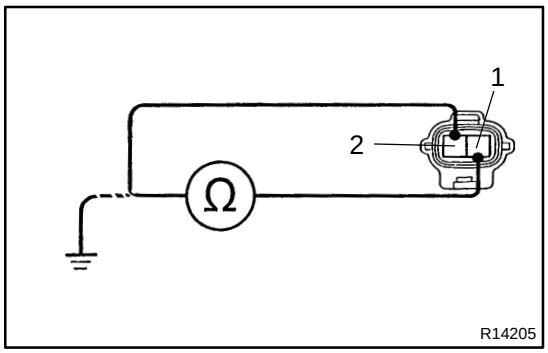

Front

PREPARATION:

(a) Remove front fender splash shield.

(b) Disconnect speed sensor connector.

CHECK:

Measure resistance between terminals 1 and 2 of speed sensor connector.

OK:

Resistance: 0.6 - 2.5 kΩ

CHECK:

Measure resistance between terminals 1 and 2 of speed sensor connector and body ground.

OK:

Resistance: 1 MΩ or higher

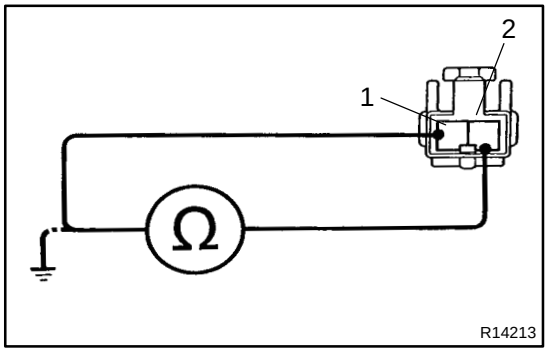

Rear

PREPARATION:

(a) Remove rear seat cushion, seat back and quarter trim panel.

(b) Disconnect speed sensor connector.

CHECK:

Measure resistance between terminals 1 and 2 of speed sensor connector.

OK:

Resistance: 0.65 - 1.8 kΩ

CHECK:

Measure resistance between terminals 1 and 2 of speed sensor connector and body ground.

OK:

Resistance: 1 MΩ or higher

NG	**Replace speed sensor.**

NOTICE:

Check the speed sensor signal last (See page DI-501).

OK

3	**Check for open and short in harness and connector between each speed sensor and ABS ECU (See page IN-28).**

NG	**Repair or replace harness or connector.**

OK

4	**Check for open and short in harness and connector between terminals FRO, FLO, RRO, RLO of throttle control ECU and ABS ECU (See page IN-28).**

NG → **Repair or replace harness or connector.**

OK

Check and replace throttle control ECU.

DI4W7-01

DTC	71, 72	Emergency Fuel Cut

CIRCUIT DESCRIPTION

DTC No.	DTC Detecting Condition	Trouble Area
71	Vehicle stability control required signal is received 2 times continuously from ECM and throttle control ECU is detected the motor system malfunction. The 2nd vehicle stability required signal is received more or less than 0.5 sec.	□Sub-throttle valve motor □Sub-throttle valve □Throttle control ECU
72	Vehicle stability control required signal is received 2 times continuously from ECM.	

WIRING DIAGRAM

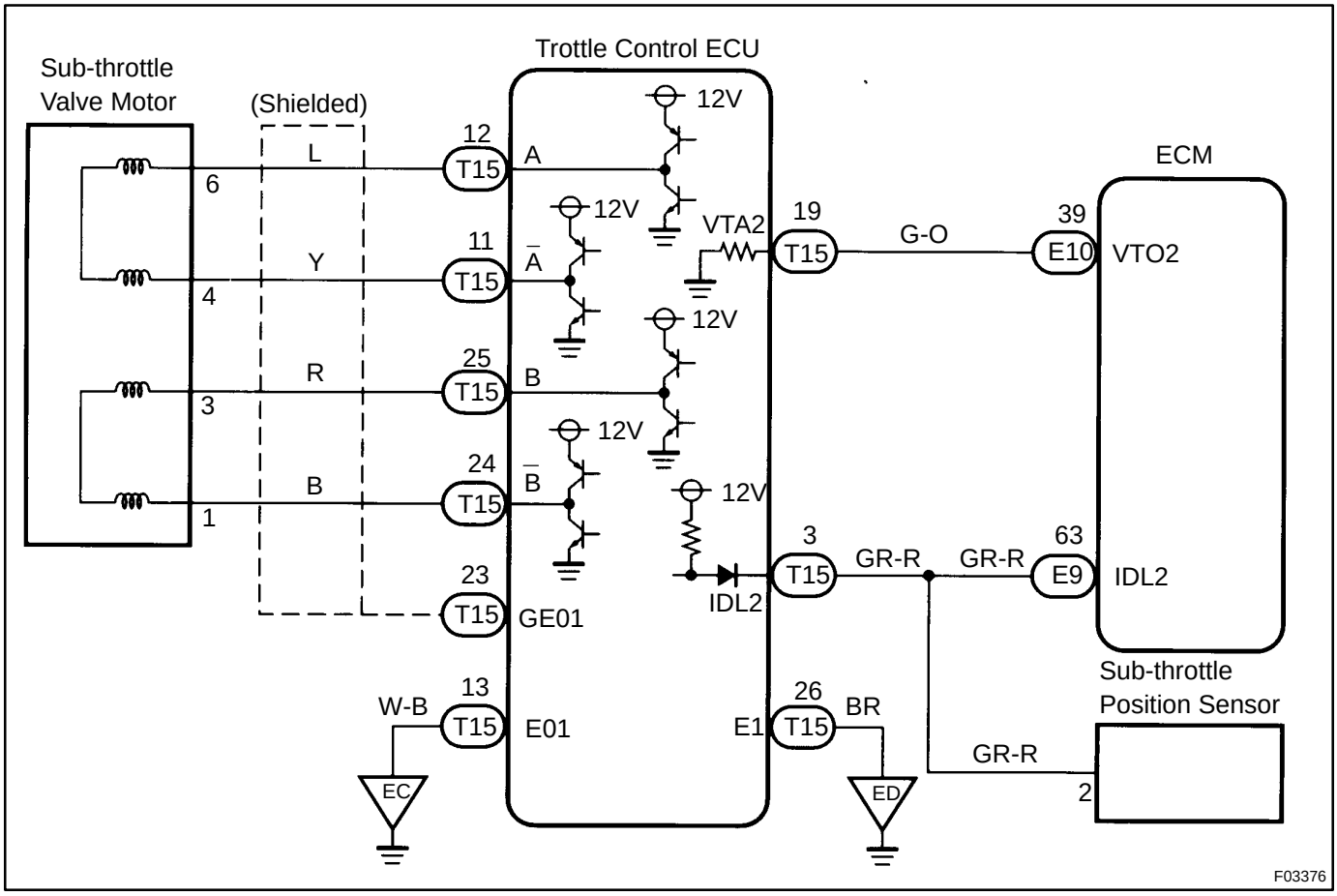

INSPECTION PROCEDURE

1	**Check sub-throttle valve motor.**

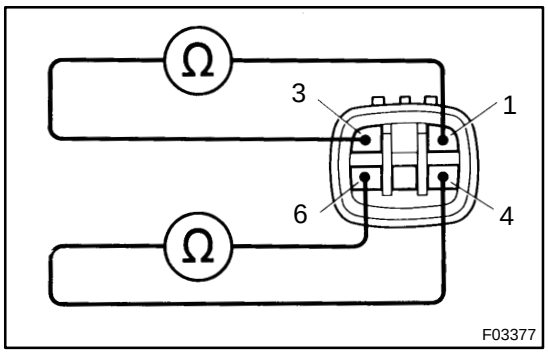

PREPARATION:
Disconnect sub-throttle valve motor connector.
CHECK:
Check continuity between each terminal of sub-throttle valve motor connector.
OK:

Terminals 1 and 3	Continuity (Reference value 0.40 - 0.48 Ω)
Terminal 4 and 6	

NG → **Replace sub-throttle valve motor.**

OK

2	**Check voltage between terminal IDL2 of throttle control ECU and body ground.**

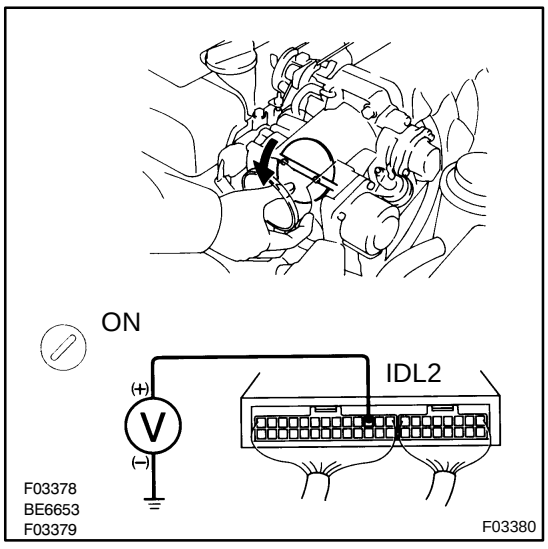

PREPARATION:
(a) Remove throttle control ECU with connectors still connected.
(b) Remove intake air duct.
(c) Disconnect sub-throttle valve motor connector.
(d) Turn ignition switch ON.
CHECK:
Measure voltage between terminal IDL2 of throttle control ECU and body ground, when the sub-throttle valve is fully closed and fully open.
OK:

Sub-throttle valve position	Voltage
Fully closed	0 - 3 V
Fully open	9 - 14 V

OK → **Go to step 4.**

NG

3	Check for open and short in harness and connector between terminal IDL2 of throttle control ECU and sub-throttle osition sensor (See page IN-28).

NG → Repair or replace harness or connector.

OK ↓

Check and replace throttle control ECU.

4	Check sub-throttle position sensor (See page DI-243).

NG → Adjust or replace sub-throttle position sensor (See page SF-44).

OK ↓

5	Check for open and short in harness and connector between terminal E01, E1 of throttle control ECU and body ground (See page IN-28).

NG → Repair or replace harness or connector.

OK ↓

Check and replace throttle control ECU.

DI4W8-01

DTC	81	ABS Control System Malfunction

CIRCUIT DESCRIPTION

DTC No.	DTC Detecting Condition	Trouble Area
81	Engine speed is 500 rpm or more and ABS warning light is ON for 12 sec. or more.	□Wire harness and connector (WA circuit) □ABS ECU □Throttle control ECU

WIRING DIAGRAM

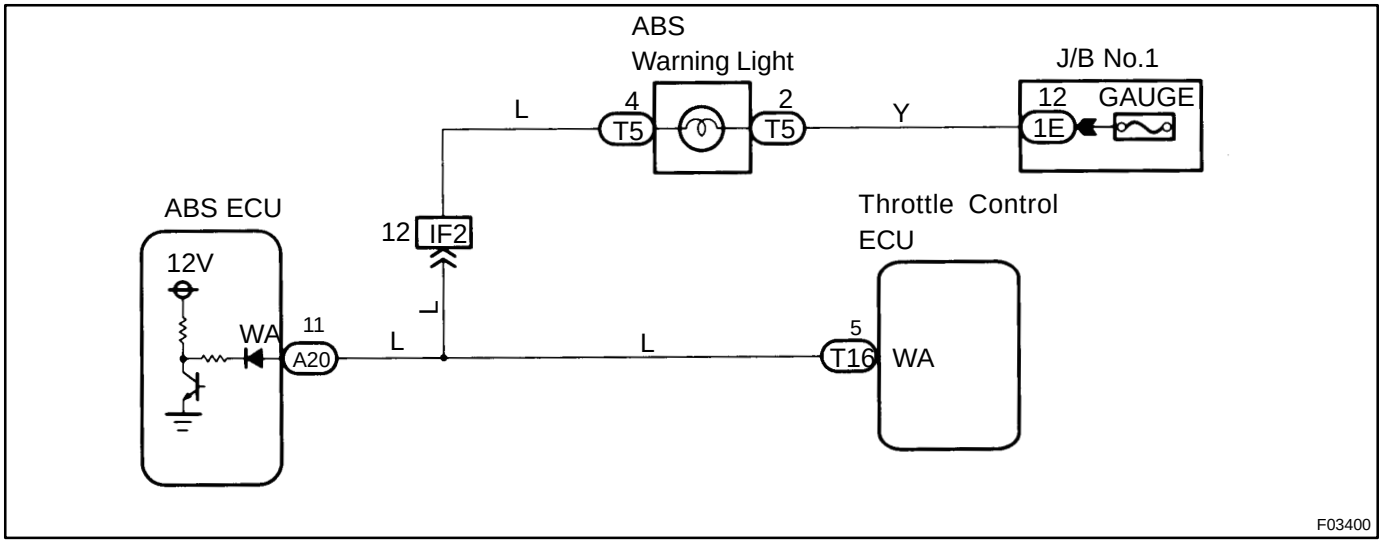

INSPECTION PROCEDURE

1	**Check the DTC for the ABS (See page DI-501).**

*1	**Repair ABS control system according to the code output.**

*2

*1: Output NG code
*2: Malfunction indicator light remains ON

2	**Check voltage between terminal WA of throttle control ECU and body ground (See page IN-28).**

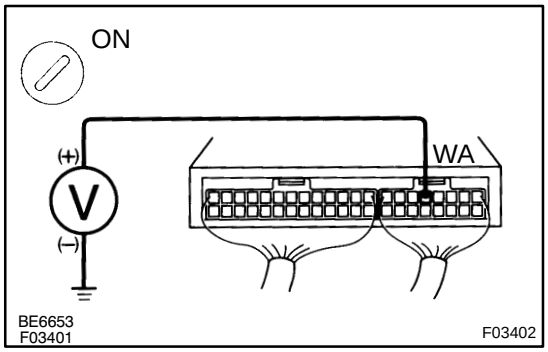

PREPARATION:

Remove throttle control ECU with connectors still connected.

CHECK:

Measure voltage between terminal WA of throttle control ECU and body ground.

OK:

Voltage: 9 - 14 V

NG → **Check and replace ABS ECU.**

OK

3	**Check for short in harness and connector between terminal WA of ABS ECU and throttle control ECU (See page IN-28).**

NG → **Repair or replace harness or connector.**

OK

Check and replace throttle control ECU.

DI4W9-01

TRAC OFF Indicator Light, TRAC OFF Switch Circuit

CIRCUIT DESCRIPTION

This is the TRAC control main switch. When the TRAC OFF switch is pushed on, TRAC control goes off and the TRAC OFF indicator lights up. This indicator blinks for warnings when the trouble occurs and for displaying DTC.

WIRING DIAGRAM

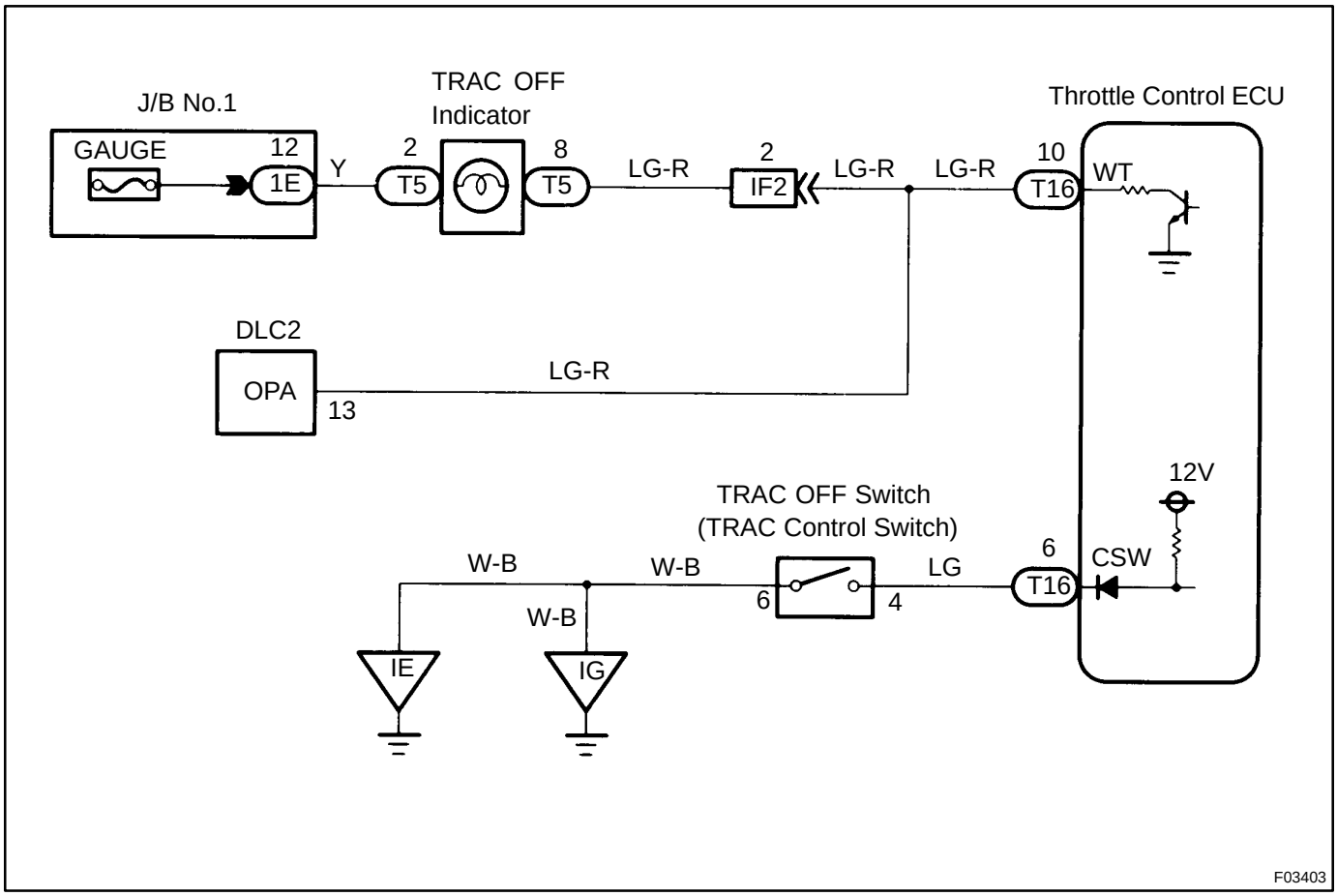

INSPECTION PROCEDURE

1	**Check DTC.**

Check DTC on page DI-501 .

YES → **Repair circuit indicated by the code output.**

NO

2	Check TRAC OFF switch.

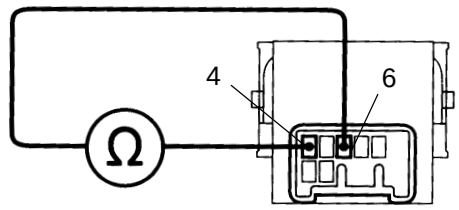

TRAC OFF Switch
(TRAC Control Switch)
F03404

PREPARATION:

(a) Remove TRAC OFF switch (TRAC control switch).

(b) Disconnect TRAC control switch connector.

CHECK:

Measure resistance between terminals 4 and 6 of TRAC control switch when TRAC OFF switch is on and off.

OK:

TRAC OFF switch	Resistance
Pushed in	Continuity
Released	1 MΩ or higher

NG → **Replace TRAC control switch.**

OK ↓

3	Check for open and short in harness and connector between terminal CSW of throttle control ECU and TRAC control switch and body ground (See page IN-28).

NG → **Repair or replace harness or connector.**

OK ↓

4	Check TRAC OFF indicator light.

See combination meter troubleshooting on page BE-2 .

NG → **Repair or replace combination meter.**

OK ↓

5	**Check for open and short in harness and connector between terminal WT of throttle control ECU and TRAC OFF indicator light (See page IN-28).**

NG → **Repair or replace harness or connector.**

OK

Check and replace throttle control ECU.

DI4WA-01

SLIP Indicator Light Circuit

CIRCUIT DESCRIPTION

The SLIP indicator blinks during TRAC operation.

WIRING DIAGRAM

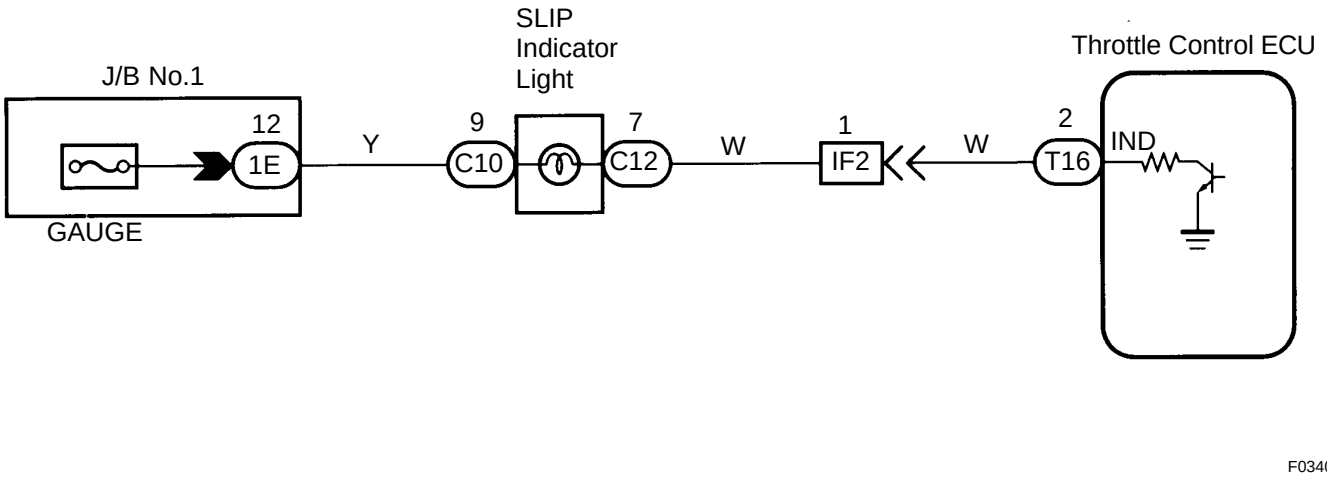

INSPECTION PROCEDURE

1	**Check SLIP indicator light.**

See combination meter troubleshooting on page BE-2 .

NG → **Repair or replace combination meter.**

OK

2	**Check for short in harness and connector between throttle control ECU and SLIP indicator light (See page IN-28).**

NG → **Repair or replace harness or connector.**

OK

Check and replace throttle control ECU.

DI4WB-01

SNOW Indicator Light, SNOW Mode Switch Circuit

CIRCUIT DESCRIPTION

When you push the SNOW mode switch, TRAC control becomes SNOW mode operation and the SNOW indicator light on, and when you push the TRAC OFF switch, TRAC control will be released to normal mode operation and the SNOW indicator light goes off.

WIRING DIAGRAM

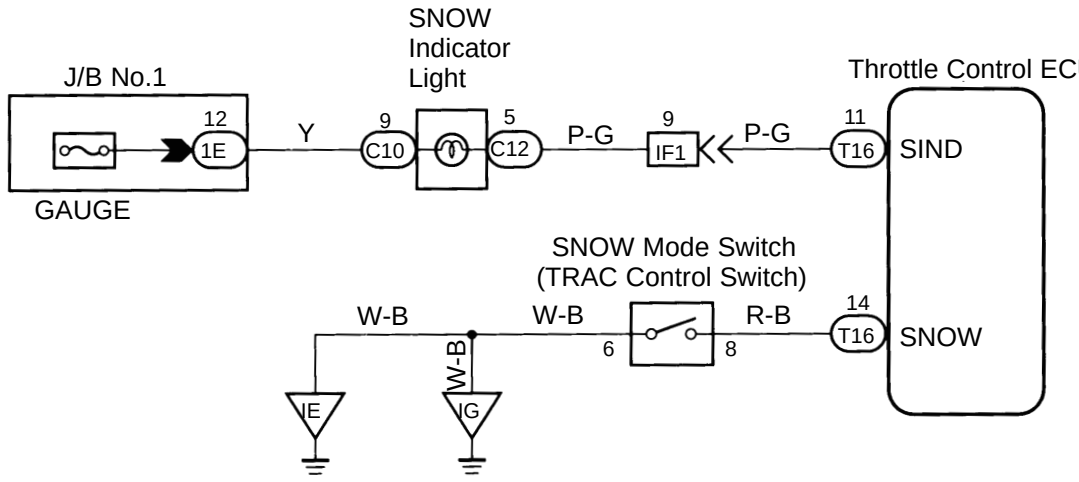

INSPECTION PROCEDURE

1	**Check SNOW mode switch.**

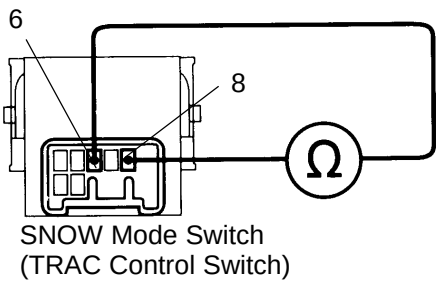

PREPARATION:

(a) Remove SNOW mode switch (TRAC control switch).

(b) Disconnect TRAC control switch connector.

CHECK:

Measure resistance between terminals 6 and 8 of TRAC control switch when SNOW mode switch on and off.

OK:

TRAC control switch	Resistance
SNOW mode switch pushed in	Continuity
TRAC OFF switch pushed in	1 MΩ or higher

NG → **Replace TRAC control switch.**

OK

2	**Check for open and short in harness and connector between SNSW of throttle control ECU and TRAC control switch and body ground (See page IN-28).**

NG → **Repair or replace harness or connector.**

OK

3	**Check SNOW indicator light.**

See combination meter troubleshooting on page BE-2 .

NG → **Repair or replace combination meter.**

OK

4	**Check for short in harness and connector between throttle control ECU and SNOW indicator light (See page IN-28).**

NG → **Repair or replace harness or connector.**

OK

Check and replace throttle control ECU.

DI4WC-01

Tc Terminal Circuit

CIRCUIT DESCRIPTION

By connecting terminals Tc and E1 of DLC1 or DLC2, the ECU displays the DTC by blinking the TRAC OFF indicator light.

WIRING DIAGRAM

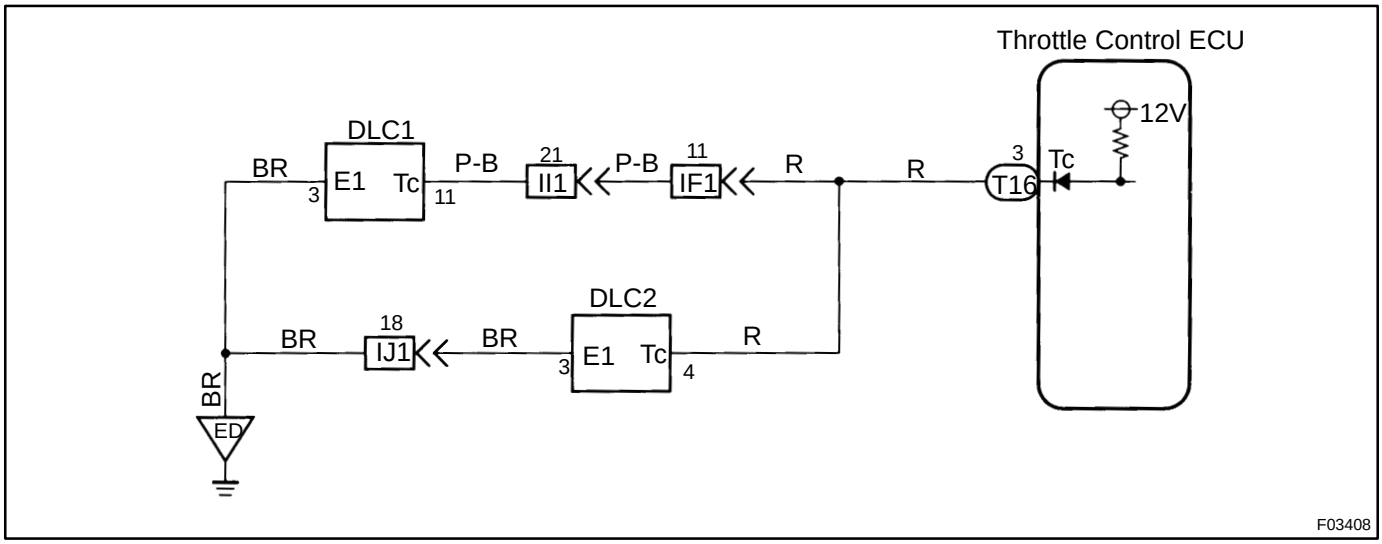

INSPECTION PROCEDURE

1	**Check voltage between terminals Tc and E1 of DLC2 or DLC1.**

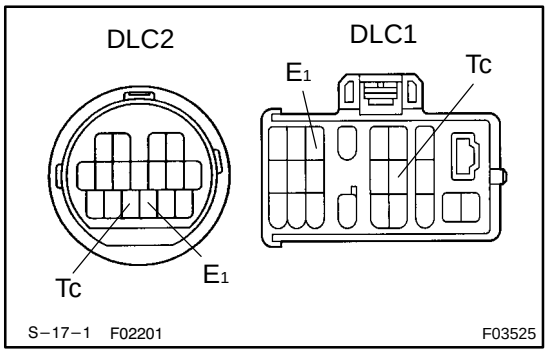

PREPARATION:

Turn ignition switch ON.

CHECK:

Measure voltage between terminals Tc and E1 of DLC2 or DLC1.

OK:

Voltage: 10 - 14 V

OK → **Proceed to next circuit inspection shown on problem symptoms chart (See page DI-508).**

NG

2	**Check for open and short in harness and connector between throttle control ECU and DLC2 or DLC1, DLC2 or DLC1 and body ground (See page IN-28).**

NG → **Repair or replace harness or connector.**

OK

Check and replace throttle control ECU.

SUPPLEMENTAL RESTRAINT SYSTEM

DI4WD-01

HOW TO PROCEED WITH TROUBLESHOOTING

Perform troubleshooting in accordance with the procedure on the following pages.

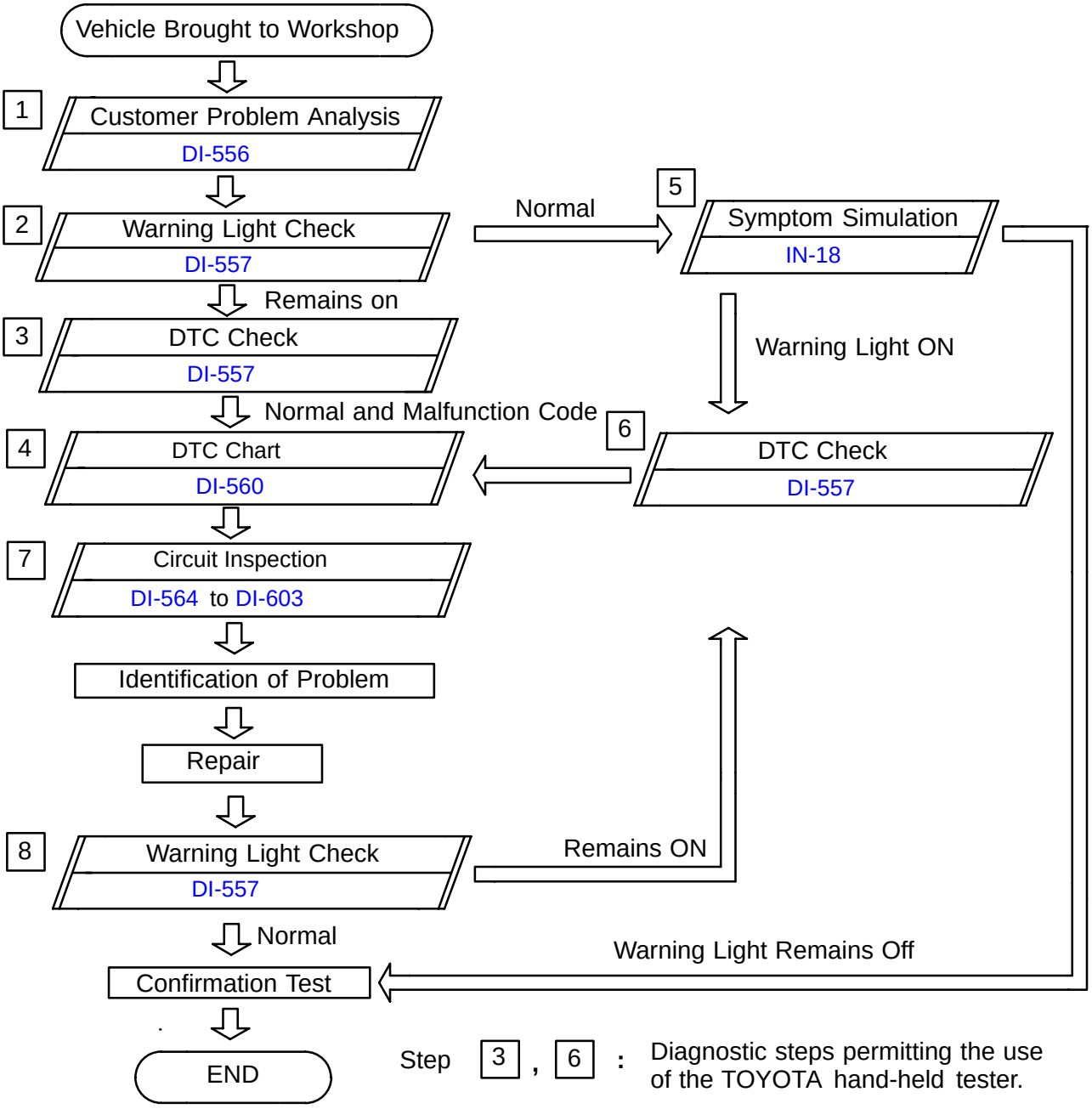

DI4WE-01

CUSTOMER PROBLEM ANALYSIS CHECK

Supplemental Restraint System Check Sheet

Inspector's Name _____

Customer's Name		**Registration No.**	
		Registration Year	/ /
		Frame No.	
Date Vehicle Brought In	/ /	**Odometer Reading**	**km Miles**

Date Problem Occurred	/ /
Weather	☐ Fine ☐ Cloudy ☐ Rainy ☐ Snowy ☐ Other
Temperature	**Approx.**

Vehicle Operation	☐ Starting ☐ Idling ☐ Driving [☐ Constant speed ☐ Acceleration ☐ Deceleration ☐ Other]
Road Conditions	
Details Of Problem	

Vehicle Inspection, Repair History¿Prior to Occurrence of Malfunction(Including Supplemental Restraint System)	

Diagnosis System Inspection

SRS Warning Light Inspection	**1st Time**	☐ Remains ON ☐ Sometimes Light Up ☐ Does Not Light Up
	2nd Time	☐ Remains ON ☐ Sometimes Light Up ☐ Does Not Light Up
DTC Inspection	**1st Time**	☐ Normal Code ☐ Malfunction Code [Code.]
	2nd Time	☐ Normal Code ☐ Malfunction Code [Code.]

DI4WF-01

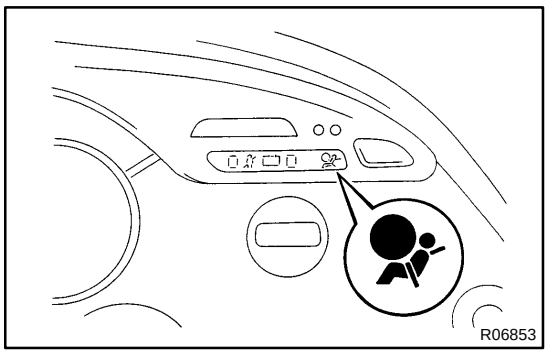

PRE-CHECK

1. CHECK SRS WARING LIGHT

(a) Turn the ignition switch to ACC or ON and check that the SRS warning light lights up.

(b) Check that the SRS warning light goes out after approx. 6 seconds.

HINT:

- When the ignition switch is at ACC or ON and the SRS warning light remains on or flashes, the airbag sensor assembly has detected a malfunction code.
- If, after approx. 6 seconds have elapsed, the SRS warning light sometimes lights up or the SRS warning light lights up even when the ignition switch is OFF, a short in the SRS warning light circuit can be considered likely. Proceed to "SRS warning light system malfunction" on page DI-598 , DI-600 .

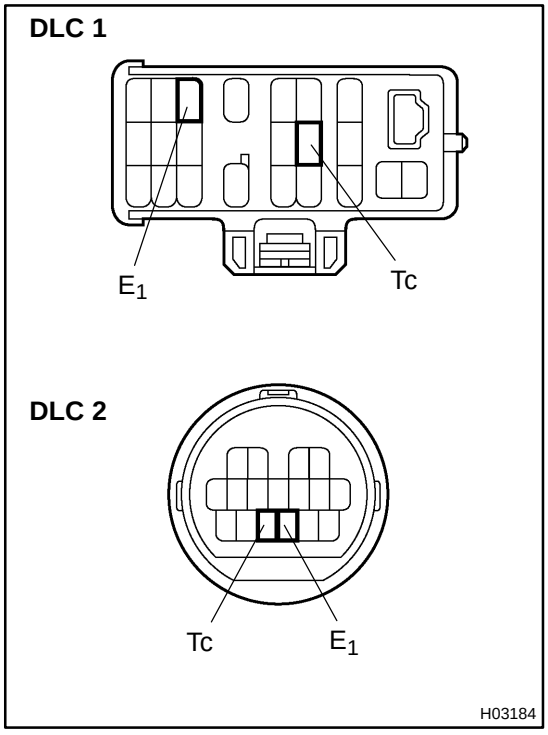

2. CHECK DTC (Using diagnosis check wire)

(a) Using diagnosis check wire, check the output of DTC.

(1) Turn the ignition switch to ACC or ON position and wait approx. 20 seconds.

(2) Using SST, connect the terminals Tc and E_1 of the DLC1.

HINT:

DTC check and troubleshooting of each DTC can also be done using DLC2.

SST 09843-18020

NOTICE:

Never make a mistake with the terminal connection position as this will cause a malfunction.

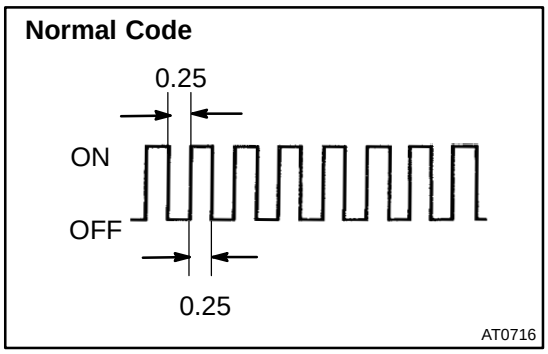

(b) Read the DTC.
Read the 2-digit DTC as indicated by the number of times the SRS warning light blinks. As an example, the blinking patterns, normal, 11 and 31 are as shown on the illustration.

- ☐ Normal code indication
  The light will blink 2 times per second.
- ☐ Malfunction code indication
  The first blinking output indicates the first digit of a 2-digit DTC. After a 1.5 second pause, the second blinking output will indicate the second digit.

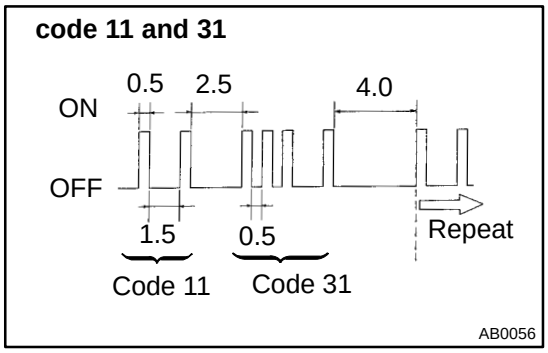

If there are 2 or more codes, there will be a 2.5 second pause between each code. After all the codes have been output, there will be a 4.0 second pause and they will all be repeated.
HINT:

- ☐ In the event of a number of trouble codes, indication will start from the smallest numbered code.
- ☐ If it does not output a DTC or outputs a DTC without terminal connection, proceed to the Tc terminal circuit inspection on page DI-603 .

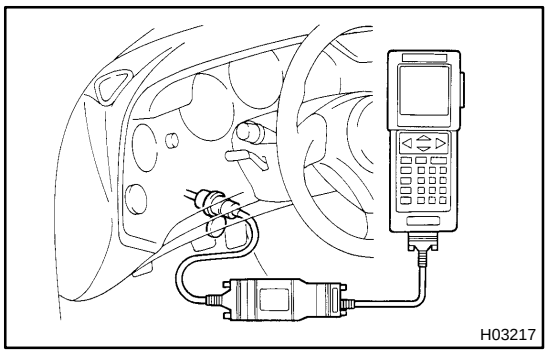

3. CHECK DTC (Using TOYOTA hand-held tester)

(a) Hook up the TOYOTA hand-held tester to the check connector.

(b) Read the DTCs by following the prompts on the tester screen.

HINT:
Please refer to the TOYOTA hand-held tester operator's manual, for further details.

4. CLEAR DTC (Using diagnosis check wire)

When the ignition switch is turned off, the DTC is cleared.

5. RELEASE METHOD OF AIRBAG ACTIVATION PREVENTION MECHANISM

An airbag activation prevention mechanism is built into the connecter for the squib circuit of the SRS. When release of the airbag activation prevention mechanism is directed in the troubleshooting procedure, as shown in the illustration of the connectors (1) and 839 below, insert paper which is the same thickness as the male terminal, between the terminal and the short spring.

CAUTION:

- **NEVER RELEASE the airbag activation prevention mechanism on the steering wheel pad connector.**

NOTICE:

- **Do not release the airbag activation prevention mechanism unless specifically directed by the troubleshooting procedure.**
- **If the paper inserted is too thick the terminal and short spring may be damaged, so always use paper the same thickness as the male terminal.**

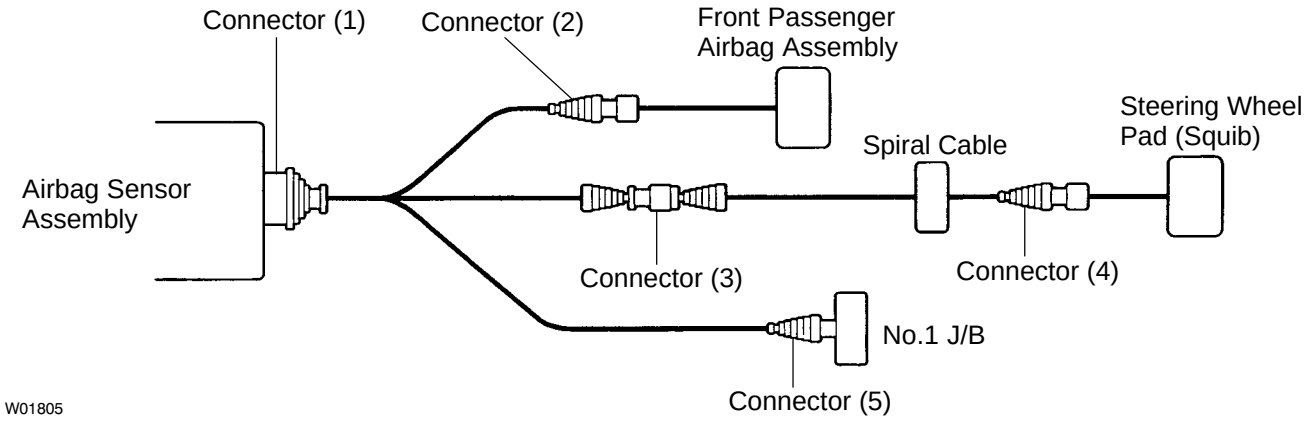

W01805

Aibag Sensor Assembly Connector [Connector (1)]

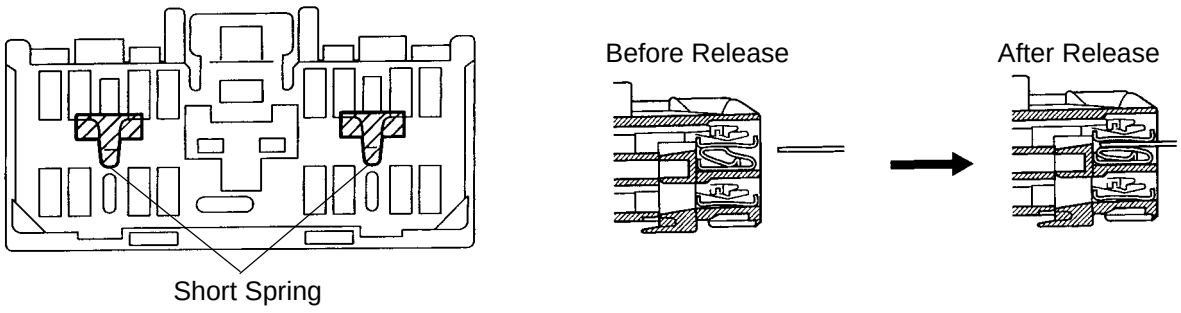

W03146 W03147

Spiral Cable Connector [Connector (5)]

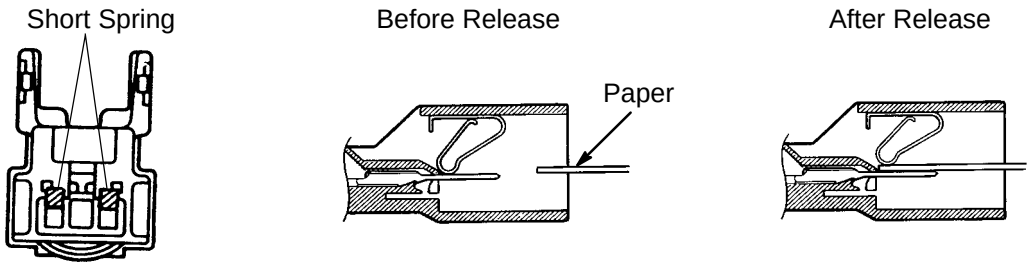

AB0130 AB0045 AB0046

H09720

DI4WG-01

DIAGNOSTIC TROUBLE CODE CHART

DTC No. (See Page)	Detection Item	Trouble Area	SRS Warning Light
(Normal) (DI-595)	□System normal	-	OFF
	□Source voltage drop	□Battery □Airbag sensor assembly	ON
11 (DI-564)	□Short in squib circuit (to ground)	□Steering wheel pad (D squib) □Front passenger airbag assembly (P squib) □Spiral cable □Airbag sensor assembly □Wire harness	ON
12 (DI-571)	□Short in squib circuit (to B+)	□Steering wheel pad (D squib) □Front passenger airbag assembly (P squib) □Spiral cable □Airbag sensor assembly □Wire harness	ON
13 (DI-577)	□Short in D squib circuit	□Steering wheel pad (D squib) □Spiral cable □Airbag sensor assembly □Wire harness	ON
14 (DI-582)	□Open in D squib circuit	□Steering wheel pad (D squib) □Spiral cable □Airbag sensor assembly □Wire harness	ON
31 (DI-586)	□Airbag sensor assembly malfunction	□Airbag sensor assembly	ON
53 (DI-588)	□Short in P squib circuit	□Front passenger airbag assembly (P squib) □Airbag sensor assembly □Wire harness	ON
54 (DI-592)	□Open in P squib circuit	□Front passenger airbag assembly (P squib) □Airbag sensor assembly □Wire harness	ON

HINT:

- □ When the SRS warning light remains lit up and the DTC is the normal code, this means a source voltage drop.
  This malfunction is not stored in memory by the airbag sensor assembly and if the power source voltage returns to normal, after approx. 10 seconds the SRS warning light will automatically go out.
- □ When 2 or more codes are indicated, the codes will be displayed in numeral order starting from the lowest numbered code.
- □ If a code not listed on the chart is displayed, the airbag sensor assembly is faulty.

DI4WH-01

PARTS LOCATION

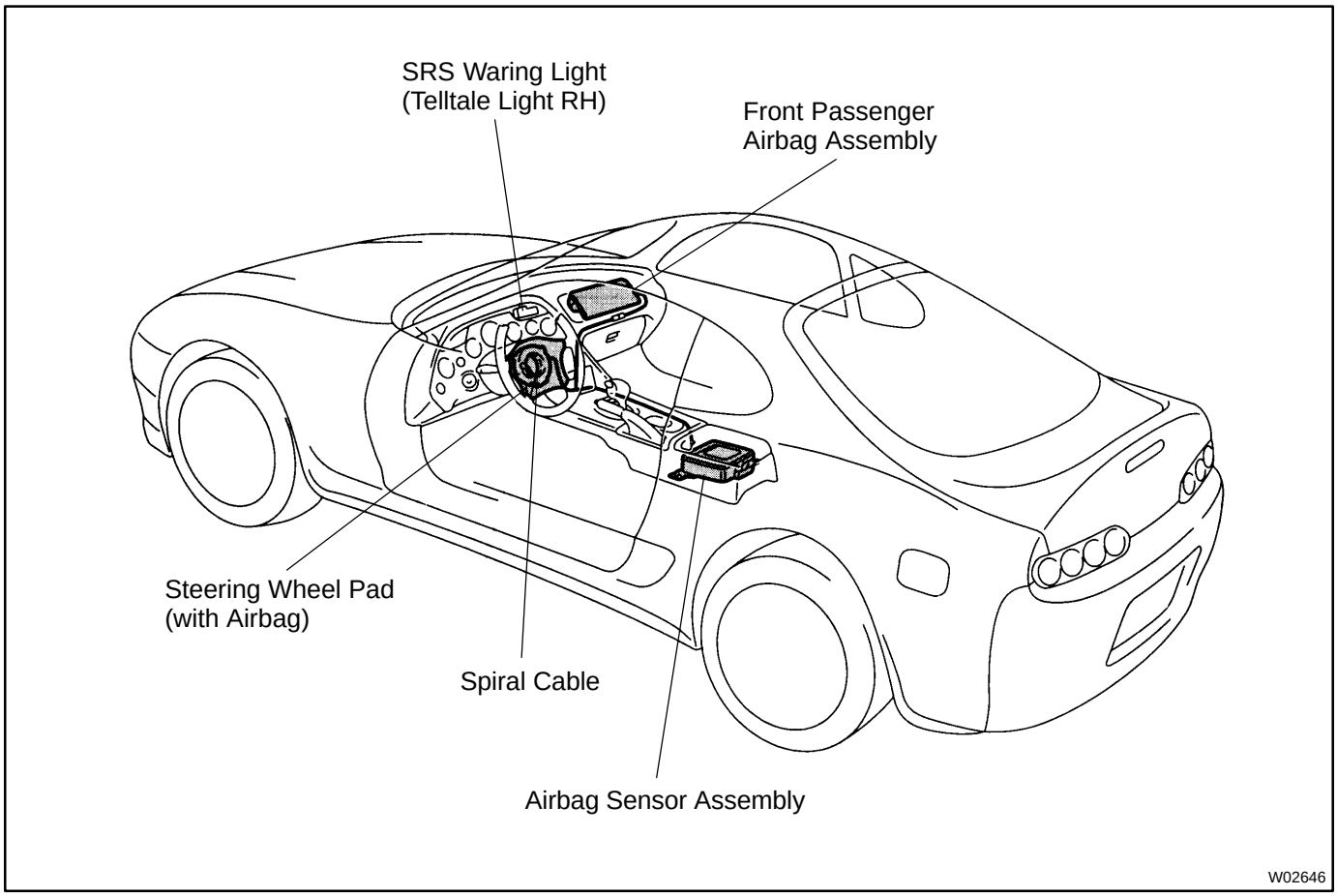

DI4WI-01

TERMINALS OF ECM

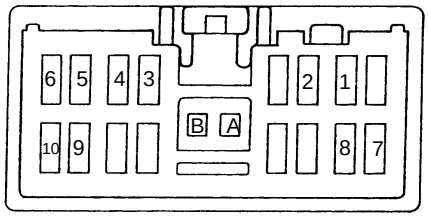

W02759

No.	Symbol	Terminal Name
A	-	Electrical Connection Check Mechanism
B	-	Electrical Connection Check Mechanism
1	P^-	Squib ⊖ (Passenger)
2	P^+	Squib ⊕ (Passenger)
3	LA	SRS Warning Light
4	D^-	Squib ⊖ (Driver)
5	D^+	Squib ⊕ (Driver)
6	Tc	Diagnosis
7	E_2	Ground
8	E_1	Ground
9	IG_2	Power Source (IGN Fuse)
10	ACC	Power Source (CIG Fuse)

DI4WJ-01

PROBLEM SYMPTOMS TABLE

Proceed with troubleshooting of each circuit in the table below.

Problem Symptom	Inspection Item	Page
□With the ignition switch at ACC or ON, the SRS warning light sometimes lights up after approx. 6 seconds have elapsed. □SRS warning light lights up even when ignition switch is in the LOCK position.	□SRS warning light system malfunction (Always lit up when ignition switch is in LOCK position.)	DI-598
□With the ignition switch at ACC or ON, the SRS warning light does not light up.	□SRS warning light system malfunction (Does not light up when ignition switch is turned to ACC or ON.)	DI-600
□DTC not displayed. □SRS warning light is always lit up with a DTC check procedure. □DTC displayed without Tc and E_1 terminal connection.	□Tc terminal circuit	DI-603

DI4WK-01

CIRCUIT INSPECTION

DTC	11	Short in Squib Circuit (to Ground)

CIRCUIT DESCRIPTION

The squib circuit consists of the airbag sensor assembly, spiral cable, steering wheel pad and front passenger airbag assembly. It causes the SRS to deploy when the SRS deployment conditions are satisfied.
For details of the function of each component, see FUNCTION OF COMPONENTS on page RS-2 .
DTC 11 is recorded a when ground short is detected in the squib circuit.

DTC No.	DTC Detecting Condition	Trouble Area
11	□Short circuit in squib wire harness (to ground). □Squib malfunction. □Spiral cable malfunction. □Airbag sensor assembly malfunction.	□Steering wheel pad (D squib) □Front passenger airbag assembly (P squib) □Spiral cable □Airbag sensor assembly □Wire harness

WIRING DIAGRAM

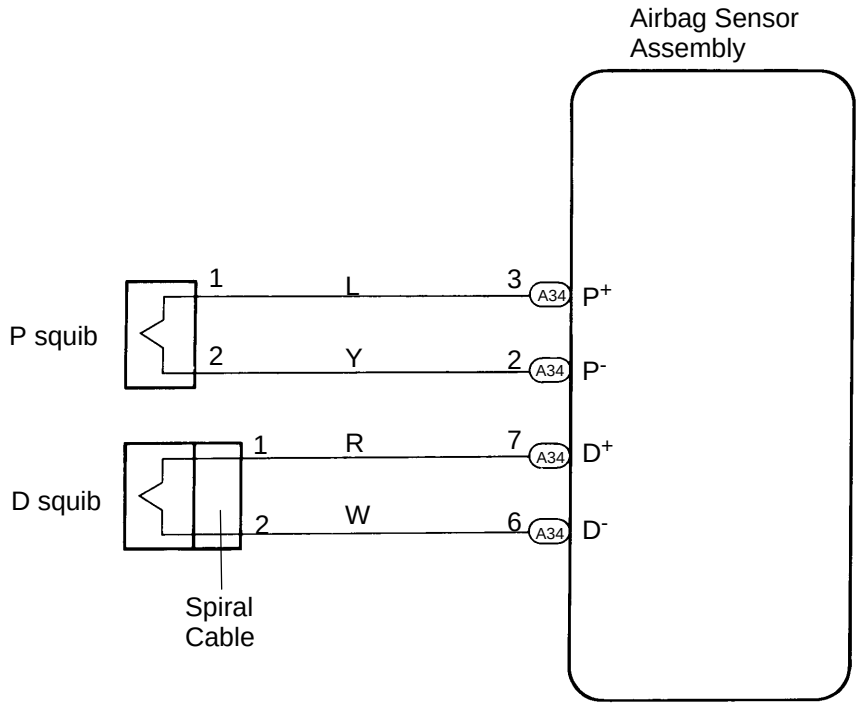

W01021

INSPECTION PROCEDURES

1	**Preparation (See step 1 on page DI-595).**

2	**Check D squib circuit.**

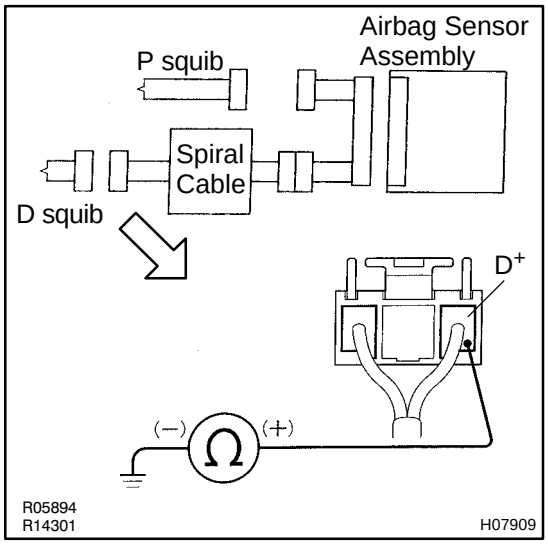

CHECK:

For the connector (on the spiral cable side) between the spiral cable and steering wheel pad, measure the resistance between D^+ and body ground.

OK:

Resistance: 1 MΩ or higher

NG → **Go to step 7.**

OK

3	Check P squib circuit.

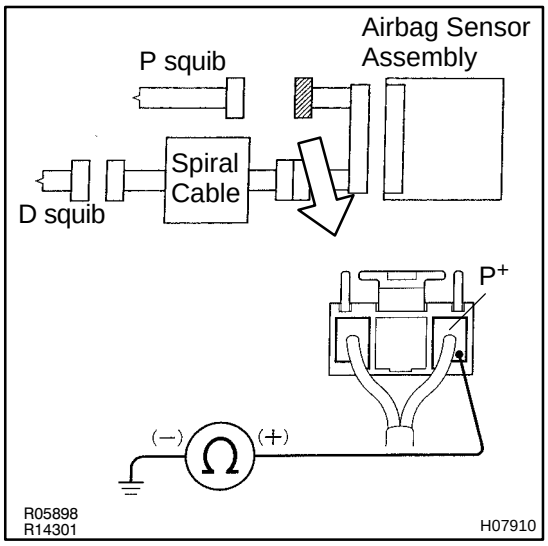

PREPARATION:

For the connector (on the airbag sensor assembly side) between the airbag sensor assembly and front passenger airbag assembly, measure the resistance between P^+ and body ground.

OK:

Resistance: 1 MΩ or higher

NG → **Repair or replace harness or connector between the airbag sensor assembly and front passenger airbag assembly.**

OK

4	Check airbag sensor assembly.

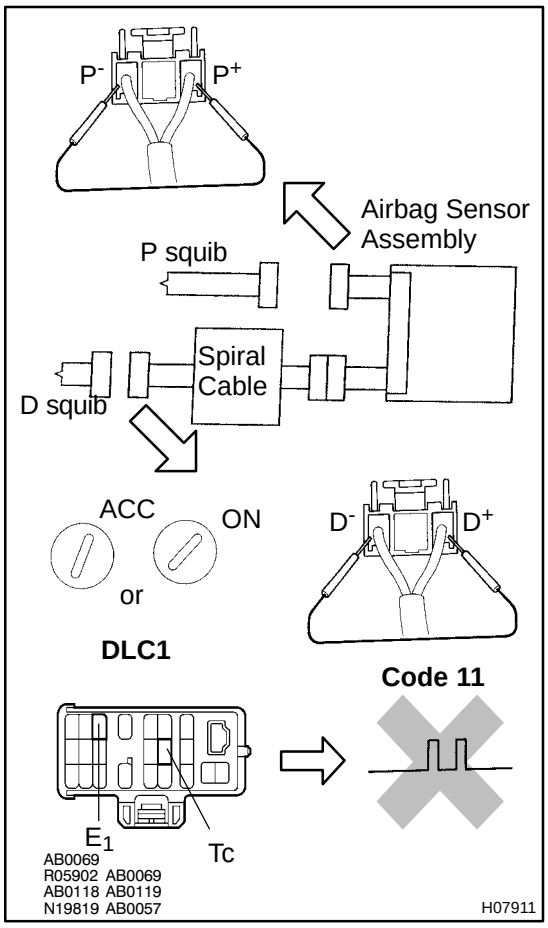

PREPARATION:

(a) Connect the connector to airbag sensor assembly.

(b) Using a service wire, connect D^+ and D^- on spiral cable side of connector between spiral cable and steering wheel pad.

(c) Using a service wire, connect P^+ and P^- on airbag sensor assembly side of connector between airbag sensor assembly and front passenger airbag assembly.

(d) Connect negative (-) terminal cable to battery, and wait at least 2 seconds.

CHECK:

(a) Turn the ignition switch to ACC or ON and wait at least 20 seconds.

(b) Clear malfunction code stored in memory.
(See page DI-557)

(c) Turn the ignition switch to LOCK, and wait at least 20 seconds.

(d) Turn the ignition switch to ACC or ON, and wait at least 20 seconds.

(e) Using SST, connect the terminals Tc and E_1 of DLC1.
SST 09843-18020

(f) Check DTC.

OK:

DTC 11 is not output.

HINT:

Codes other than code 11 may be output at this time, but they are not relevant to this check.

NG → **Replace airbag sensor assembly.**

OK

5	Check D squib.

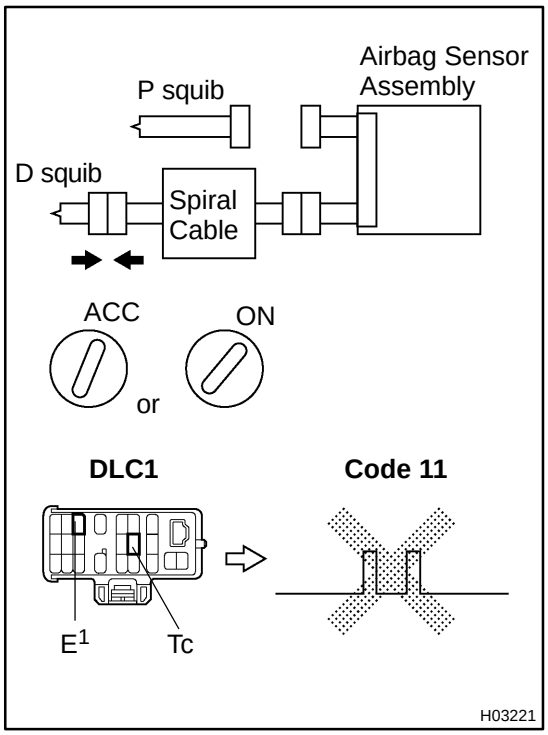

PREPARATION:

(a) Turn the ignition switch to LOCK.
(b) Disconnect negative (-) terminal cable from the battery, and wait at least 90 seconds.
(c) Connect the steering wheel pad connector.
(d) Connect negative (-) terminal cable to battery, and wait at least 2 seconds.

CHECK:

(a) Turn the ignition switch to ACC or ON and wait at least 20 seconds.
(b) Clear malfunction code stored in memory.
(See page DI-557)
(c) Turn the ignition switch to LOCK, and wait at least 20 seconds.
(d) Turn the ignition switch to ACC or ON, and wait at least 20 seconds.
(e) Using SST, connect the terminals Tc and E_1 of DLC1.
SST 09843-18020
(f) Check DTC.

OK:

DTC 11 is not output.

HINT:
Codes other than code 11 may be output at this time, but they are not relevant to this check.

NG → **Replace steering wheel pad.**

OK

6	Check P squib.

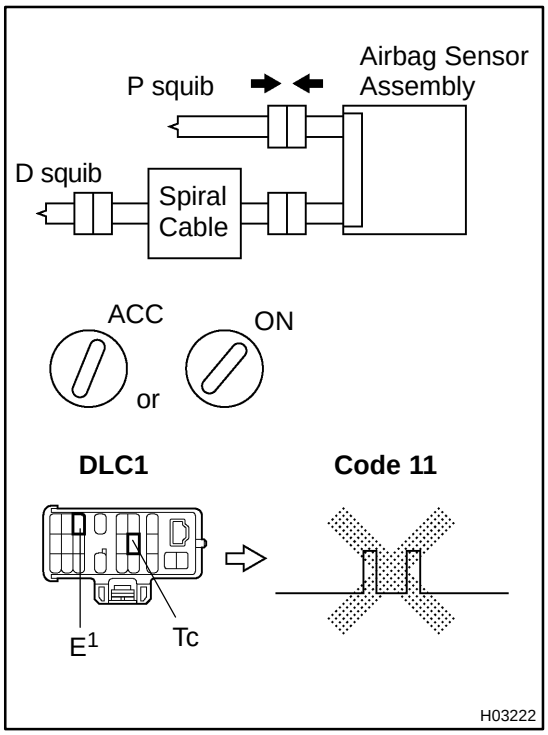

PREPARATION:

(a) Turn the ignition switch to LOCK.
(b) Disconnect negative (-) terminal cable from the battery, and wait at least 90 seconds.
(c) Connect the front passenger airbag assembly connector.
(d) Connect negative (-) terminal cable to battery, and wait at least 2 seconds.

CHECK:

(a) Turn the ignition switch to ACC or ON, and wait at least 20 seconds.
(b) Clear malfunction code stored in memory.
(See page DI-557)
(c) Turn the ignition switch to LOCK, and wait at least 20 seconds.
(d) Turn the ignition switch to ACC or ON, and wait at least 20 seconds.
(e) Using SST, connect the terminals Tc and E_1 of DLC1.
SST 09843-18020
(f) Check DTC.

OK:

DTC 11 is not output.

HINT:
Codes other than code 11 may be output at this time, but they are not relevant to this check.

NG → **Replace front passenger airbag assembly.**

OK

From the results of the above inspection, the malfunctioning part can now be considered normal. To make sure of this, use the simulation method to check. If the malfunctioning part can not be detected by the simulation method, replace all SRS components including the wire harness.

7	Check spiral cable.

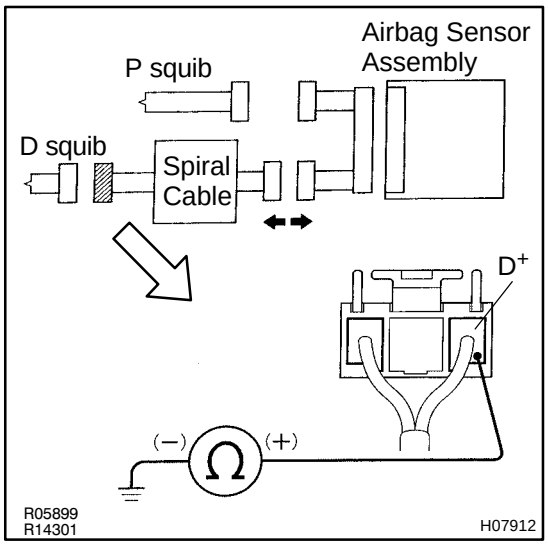

PREPARATION:

Disconnect the connector between airbag sensor assembly and spiral cable.

CHECK:

Measure the resistance between D^+ on spiral cable side of connector between spiral cable and steering wheel pad and body ground.

OK:

Resistance: 1 MΩ or higher

NG → **Repair or replace spiral cable.**

OK

Repair or replace harness or connector between airbag sensor assembly and spiral cable.

DI4WL-01

DTC	12	Short in Squib Circuit (to B+)

CIRCUIT DESCRIPTION

The squib circuit consists of the airbag sensor assembly, spiral cable, steering wheel pad and front passenger airbag assembly. It causes the SRS to deploy when the SRS deployment conditions are satisfied.
For details of the function of each component, see FUNCTION OF COMPONENTS on page RS-2 .
DTC 12 is recorded when a B+ short is detected in the squib circuit.

DTC No.	DTC Detecting Condition	Trouble Area
12	□Short circuit in squib wire harness (to B+). □Squib malfunction. □Spiral cable malfunction. □Airbag sensor assembly malfunction.	□Steering wheel pad (D squib) □Front passenger airbag assembly (P squib) □Spiral cable □Airbag sensor assembly □Wire harness

WIRING DIAGRAM

Refer to page DI-564 for the WIRING DIAGRAM.

INSPECTION PROCEDURES

1	**Preparation (See step 1 on page DI-595).**

2	**Check D squib circuit.**

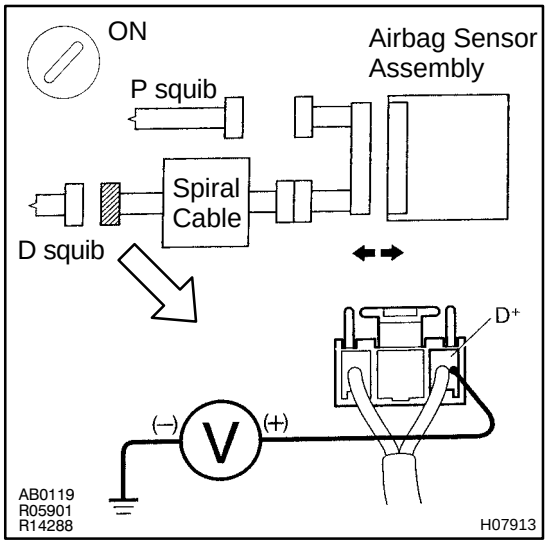

CHECK:

For the connector (on the spiral cable side) between the spiral cable and steering wheel pad, measure the voltage between D^+ and body ground.

OK:

Voltage: 0 V

NG → **Go to step 7.**

OK

3	Check P squib circuit.

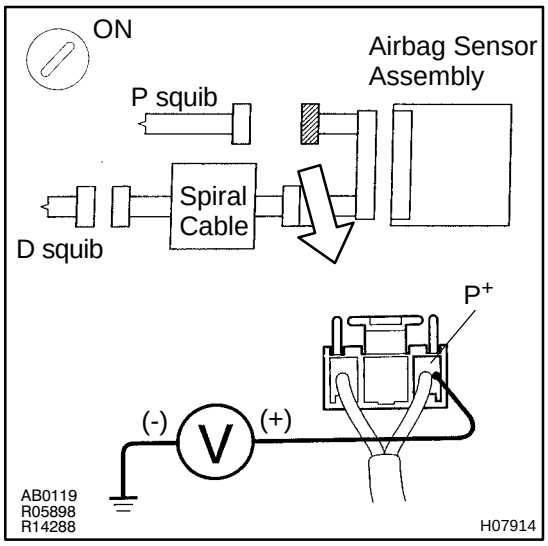

CHECK:

For the connector (on the airbag sensor assembly side) between airbag sensor assembly and front passenger airbag assembly, measure the voltage between P^+ and body ground.

OK:

Voltage: 0 V

NG → **Repair or replace harness or connector between the airbag sensor assembly and front passenger airbag assembly.**

OK

4	Check airbag sensor assembly.

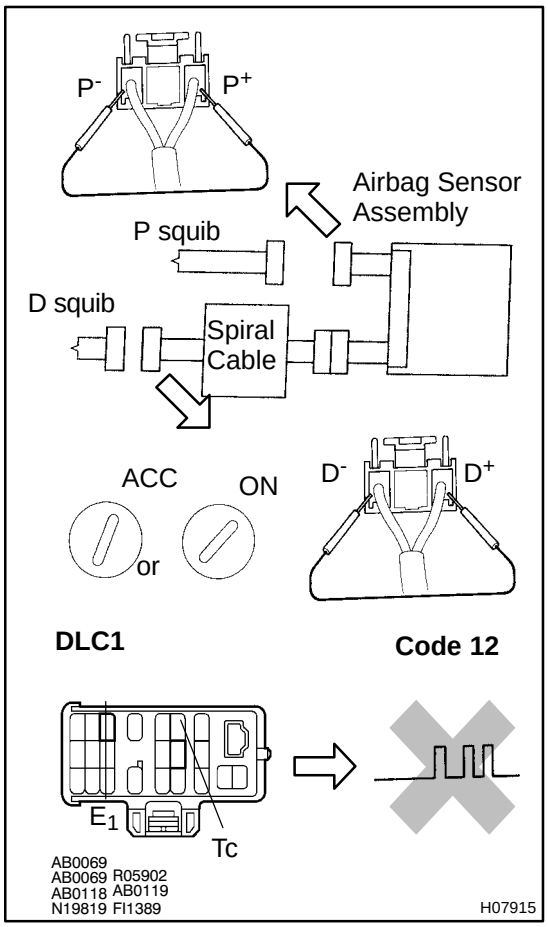

PREPARATION:

(a) Connect the connector to airbag sensor assembly.

(b) Using a service wire, connect D^+ and D^- on spiral cable side of connector between spiral cable and steering wheel pad.

(c) Using a service wire, connect P^+ and P^- on airbag sensor assembly side of connector between airbag sensor assembly and front passenger airbag assembly.

(d) Connect negative (-) terminal cable to battery, and wait at least 2 seconds.

CHECK:

(a) Turn the ignition switch to ACC or ON and wait at least 20 seconds.

(b) Clear malfunction code stored in memory.
(See page DI-557)

(c) Turn the ignition switch to LOCK, and wait at least 20 seconds.

(d) Turn the ignition switch to ACC or ON, and wait at least 20 seconds.

(e) Using SST, connect the terminals Tc and E_1 of DLC1.
SST 09843-18020

(f) Check DTC.

OK:

DTC 12 is not output.

HINT:

Codes other than code 12 may be output at this time, but they are not relevant to this check.

+ NG	Replace airbag sensor assembly.

OK

5	Check D squib.

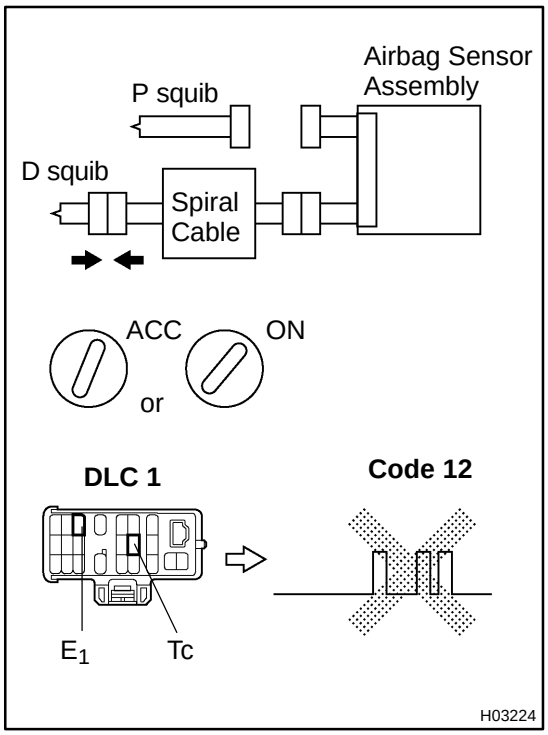

PREPARATION:

(a) Turn the ignition switch to LOCK.
(b) Disconnect negative (-) terminal cable from the battery, and wait at least 90 seconds.
(c) Connect the steering wheel pad connector.
(d) Connect negative (-) terminal cable to battery, and wait at least 2 seconds.

CHECK:

(a) Turn the ignition switch to ACC or ON, and wait at least 20 seconds.
(b) Clear malfunction code stored in memory.
(See page DI-557)
(c) Turn the ignition switch to LOCK, and wait at least 20 seconds.
(d) Turn the ignition switch to ACC or ON, and wait at least 20 seconds.
(e) Using SST, connect the terminals Tc and E_1 of DLC1.
SST 09843-18020
(f) Check DTC.

OK:

DTC 12 is not output.

HINT:
Codes other than code 12 may be output at this time, but they are not relevant to this check.

NG → **Replace steering wheel pad.**

OK

6	Check P squib.

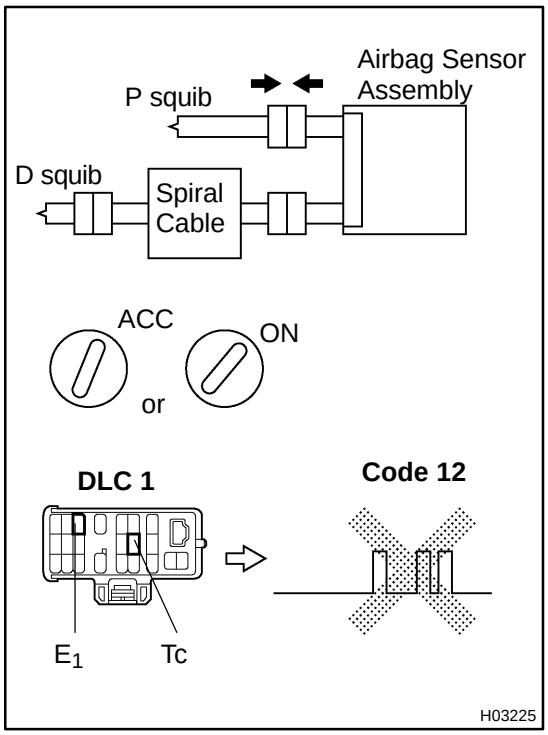

PREPARATION:

(a) Turn the ignition switch to LOCK.
(b) Disconnect negative (-) terminal cable from the battery, and wait at least 90 seconds.
(c) Connect the front passenger airbag assembly connector.
(d) Connect negative (-) terminal cable to battery, and wait at least 2 seconds.

CHECK:

(a) Turn the ignition switch to ACC or ON and wait at least 20 seconds.
(b) Clear malfunction code stored in memory.
(See page DI-557)
(c) Turn the ignition switch to LOCK, and wait at least 20 seconds.
(d) Turn the ignition switch to ACC or ON, and wait at least 20 seconds.
(e) Using SST, connect the the terminals Tc and E_1 of DLC1.
SST 09843-18020
(f) Check DTC.

OK:

DTC 12 is not output.

HINT:
Codes other than code 12 may be output at this time, but they are not relevant to this check.

NG → **Replace front passenger airbag assembly.**

OK

From the results of the above inspection, the malfunctioning part can now be considered normal. To make sure of this, use the simulation method to check.

7	Check spiral cable.

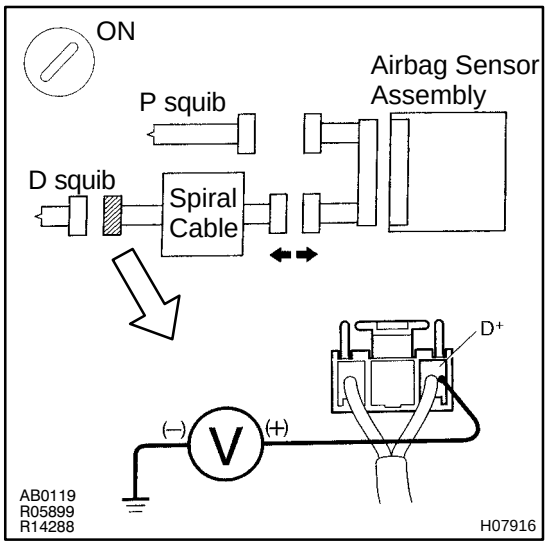

PREPARATION:

(a) Turn the ignition switch to LOCK.
(b) Disconnect the connector between airbag sensor assembly and spiral cable.
(c) Turn the ignition switch ON.

CHECK:

Measure voltage at D^+ on spiral cable side of connector between spiral cable and steering wheel pad and body ground.

OK:

Voltage: 0 V

NG → **Repair or replace spiral cable.**

OK

Repair or replace harness or connector between airbag sensor assembly and spiral cable.

DI4WM-01

DTC	13	Short in D Squib Circuit

CIRCUIT DESCRIPTION

The D squib circuit consists of the airbag sensor assembly, spiral cable and steering wheel pad.
It causes the airbag to deploy when the airbag deployment conditions are satisfied.
For details of the function of each component, see FUNCTION OF COMPONENTS on page RS-2 .
DTC 13 is recorded when a short is detected in the D squib circuit.

DTC No.	DTC Detecting Condition	Trouble Area
13	□Short circuit between D^+ wire harness and D^- wire harness of squib. □D squib malfunction. □Spiral cable malfunction. □Airbag sensor assembly malfunction.	□Steering wheel pad (D squib) □Spiral cable □Airbag sensor assembly □Wire harness

WIRING DIAGRAM

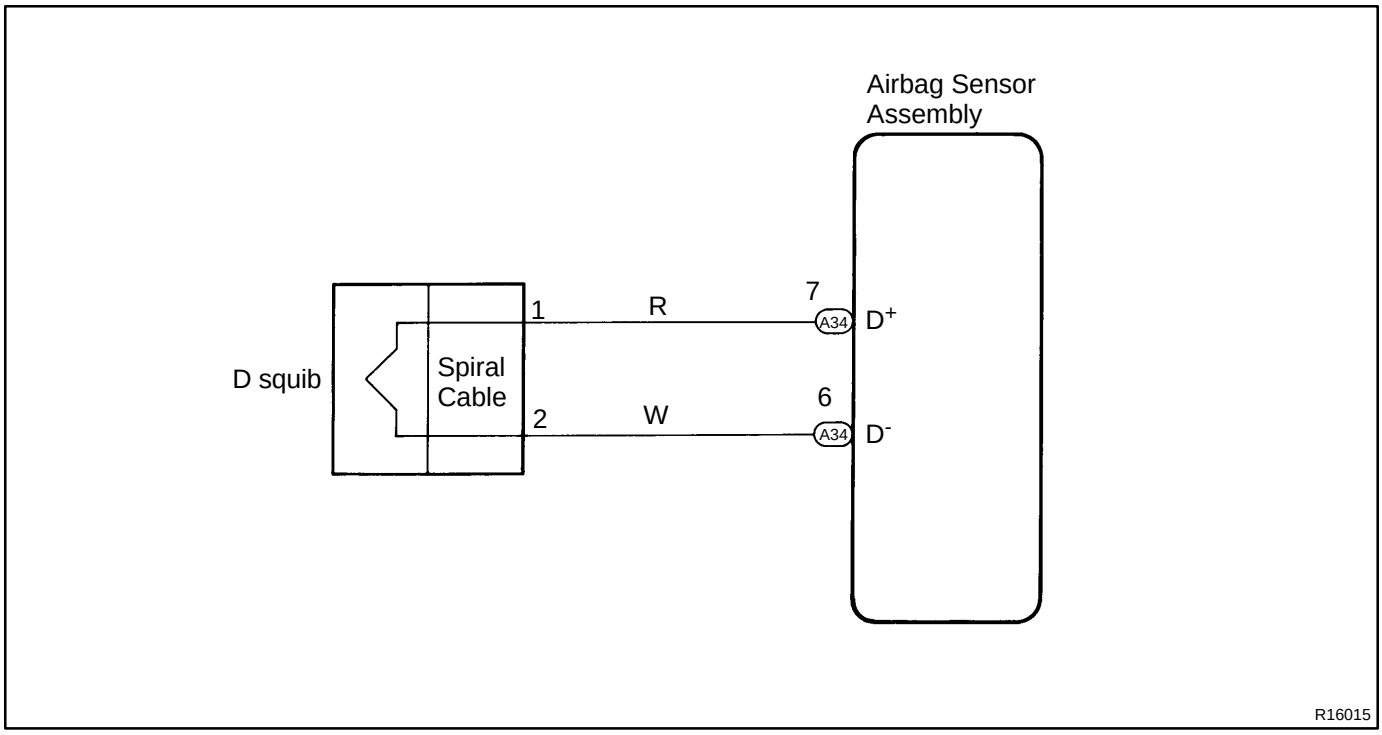

INSPECTION PROCEDURES

1	**Preparation (See step 1 on page DI-595).**

2	**Check D squib circuit.**

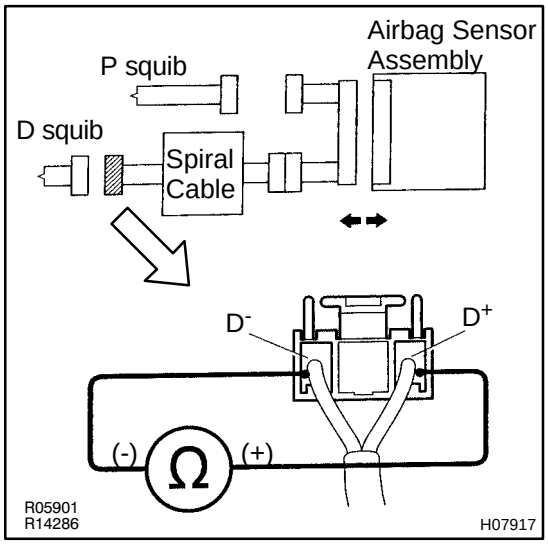

PREPARATION:

Release airbag activation prevention mechanism on airbag sensor assembly side of airbag squib connector.
(See page DI-557)

CHECK:

For the connector (on the spiral cable side) between the spiral cable and steering wheel pad, measure the resistance between D^+ and D^-.

OK:

Resistance: 1MΩ or Higher

NG	**Go to step 5.**

OK

3	Check airbag sensor assembly.

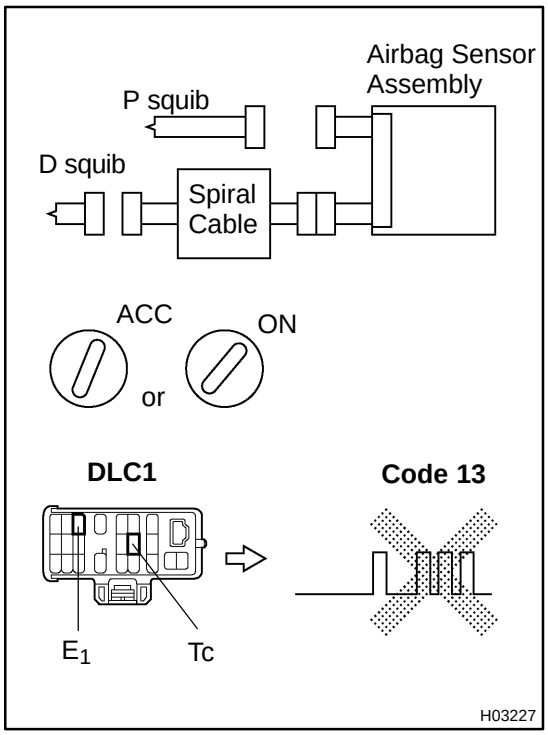

PREPARATION:

(a) Connect the connector to airbag sensor assembly.

(b) Connect negative (-) terminal cable to battery, and wait at least 2 seconds.

CHECK:

(a) Turn the ignition switch to ACC or ON and wait at least 20 seconds.

(b) Clear malfunction code stored in memory.
(See page DI-557)

(c) Turn the ignition switch to LOCK, and wait at least 20 seconds.

(d) Turn the ignition switch to ACC or ON, and wait at least 20 seconds.

(e) Using SST, connect the terminals Tc and E_1 of DLC1.
SST 09843-18020

(f) Check DTC.

OK:

DTC 13 is not output.

HINT:

Codes other than code 13 may be output at this time, but they are not relevant to this check.

NG	Replace airbag sensor assembly.

OK

4	Check D squib.

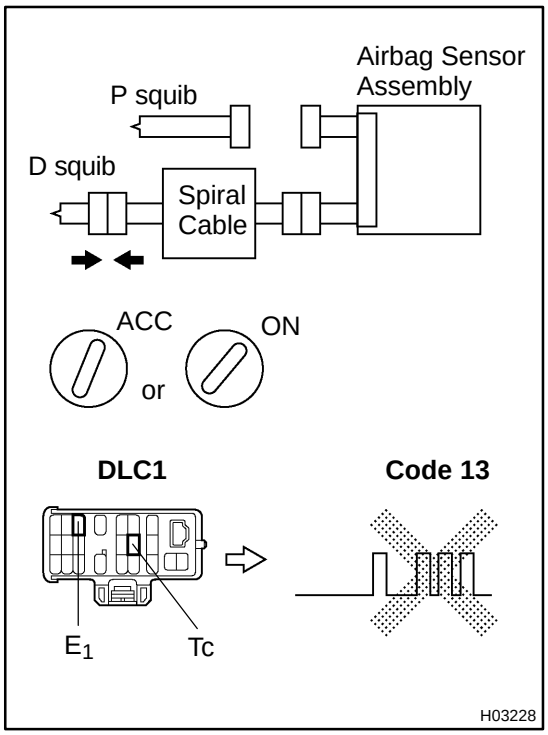

PREPARATION:

(a) Turn the ignition switch to LOCK.
(b) Disconnect negative (-) terminal cable from the battery, and wait at least 90 seconds.
(c) Connect the steering wheel pad connector.
(d) Connect negative (-) terminal cable to battery, and wait at least 2 seconds.

CHECK:

(a) Turn the ignition switch to LOCK, and wait at least 20 seconds.
(b) Turn the ignition switch to ACC or ON, and wait at least 20 seconds.
(c) Clear malfunction code stored in memory.
(See page DI-557)
(d) Turn the ignition switch to LOCK, and wait at least 20 seconds.
(e) Turn the ignition switch to ACC or ON, and wait at least 20 seconds.
(f) Using SST, connect the terminals Tc and E_1 of DLC1.
SST 09843-18020
(g) Check DTC.

OK:

DTC 13 is not output.

HINT:
Codes other than code 13 may be output at this time, but they are not relevant to this check.

NG → **Replace steering wheel pad.**

OK

From the results of the above inspection, the malfunctioning part can now be considered normal. To make sure of this, use the simulation method to check.

5	Check spiral cable.

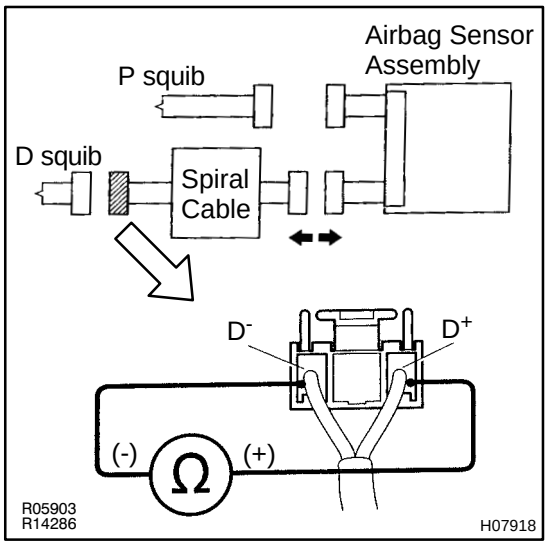

PREPARATION:

(a) Disconnect the connector between airbag sensor assembly and spiral cable.

(b) Release airbag activation prevention mechanism on airbag sensor assembly side of airbag squib connector (See page DI-557).

CHECK:

For the connector (on the spiral cable side) between the spiral cable and steering wheel pad, measure the resistance between D^+ and D^- .

OK:

Resistance: 1MΩ or Higher

NG → **Repair or replace spiral cable.**

OK

6	Check harness between airbag sensor assembly and spiral cable.

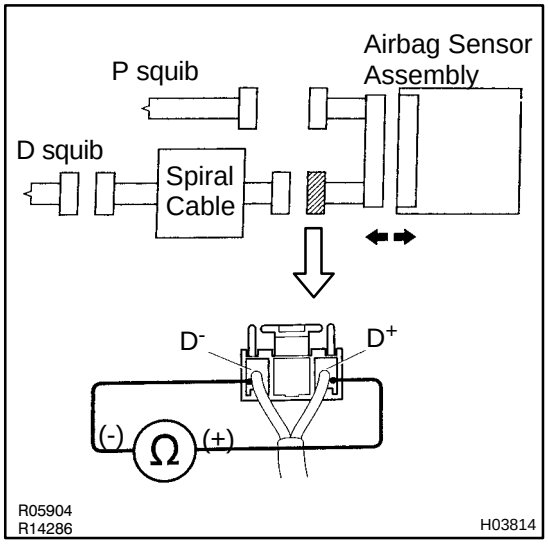

PREPARATION:

Release airbag activation prevention mechanism on airbag sensor assembly side of airbag squib connector (See page DI-557).

CHECK:

For the connector (on the airbag sensor assembly side) between the spiral cable and airbag sensor assembly, measure the resistance between D^+ and D^- .

OK:

Resistance: 1 MΩ or higher

NG → **Repair or replace harness or connector between airbag sensor assembly and spiral cable.**

OK

From the results of the above inspection, the malfunctioning part can now be considered normal. To make sure of this, use the simulation method to check.

DI4WN-01

DTC	14	Open in D Squib Circuit

CIRCUIT DESCRIPTION

The D squib circuit consists of the airbag sensor assembly, spiral cable and steering wheel pad.
It causes the airbag to deploy when the airbag deployment conditions are satisfied.
For details of the function of each component, see FUNCTION OF COMPONENTS on page RS-2 .
DTC 14 is recorded when an open is detected in the D squib circuit.

DTC No.	DTC Detecting Condition	Trouble Area
14	□Open circuit in D^+ wire harness or D^- wire harness of squib. □D squib malfunction. □Spiral cable malfunction. □Airbag sensor assembly malfunction.	□Steering wheel pad (D squib) □Spiral cable □Airbag sensor assembly □Wire harness

WIRING DIAGRAM

Refer to page DI-577 for the WIRING DIAGRAM.

INSPECTION PROCEDURES

1	**Preparation (See step 1 on page DI-595).**

2	**Check D squib circuit.**

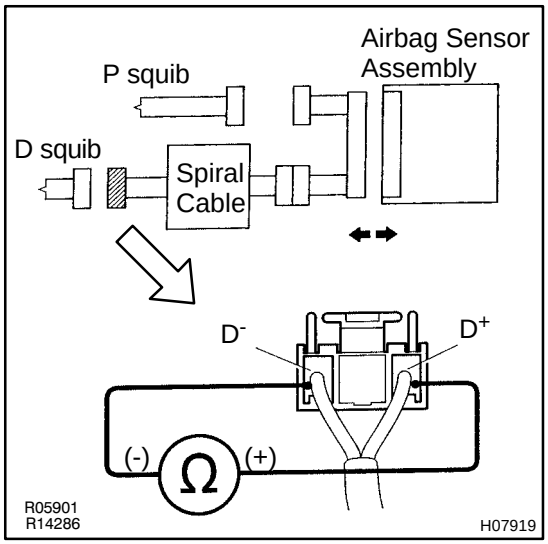

CHECK:
For the connector (on the spiral cable side) between the spiral cable and steering wheel pad, measure the resistance between D^+ and D^- .
OK:
Resistance: Below 1Ω

NG → **Go to step 5.**

OK

3	Check airbag sensor assembly.

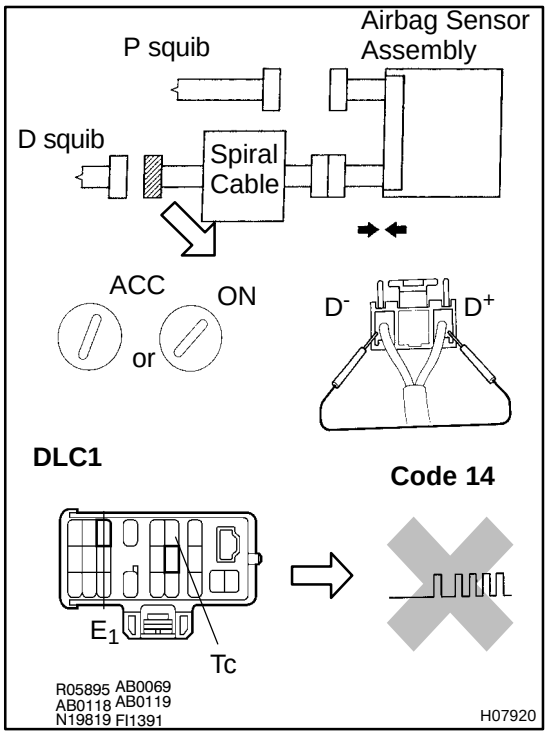

PREPARATION:

(a) Connect the connector to airbag sensor assembly.

(b) Using a service wire, connect D^+ and D^- on spiral cable side of connector between spiral cable and steering wheel pad.

(c) Connect negative (-) terminal cable to battery, and wait at least 2 seconds.

CHECK:

(a) Turn the ignition switch to LOCK, and wait at least 20 seconds.

(b) Clear malfunction code stored in memory.
(See page DI-557)

(c) Turn the ignition switch to LOCK, and wait at least 20 seconds.

(d) Turn the ignition switch to ACC or ON, and wait at least 20 seconds.

(e) Using SST, connect the terminals Tc and E_1 of DLC1.
SST 09843-18020

(f) Check DTC.

OK:

DTC 14 is not output.

HINT:

Codes other than code 14 may be output at this time, but they are not relevant to this check.

NG → **Replace airbag sensor assembly.**

OK

4	Check D squib.

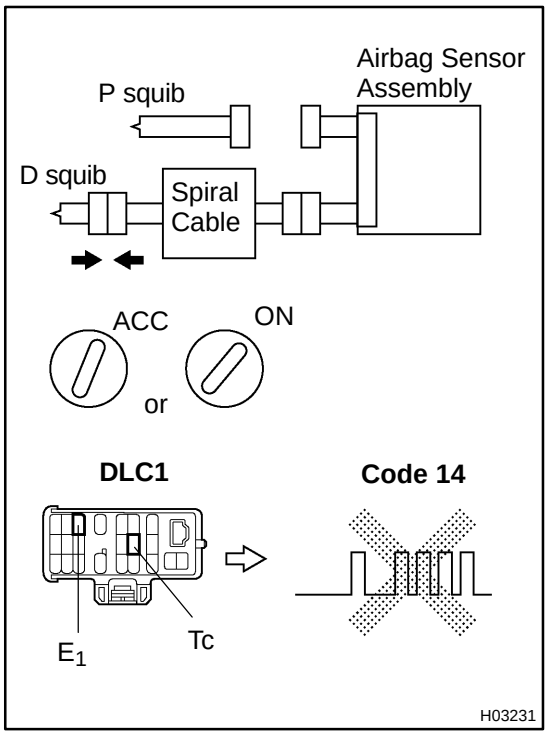

PREPARATION:

(a) Turn the ignition switch to LOCK.
(b) Disconnect negative (-) terminal cable from the battery, and wait at least 90 seconds.
(c) Connect the steering wheel pad connector.
(d) Connect negative (-) terminal cable to battery, and wait at least 2 seconds.

CHECK:

(a) Turn the ignition switch to ACC or ON and wait at least 20 seconds.
(b) Clear malfunction code stored in memory.
(See page DI-557)
(c) Turn the ignition switch to LOCK, and wait at least 20 seconds.
(d) Turn the ignition switch to ACC or ON, and wait at least 20 seconds.
(e) Using SST, connect the terminals Tc and E_1 of DLC1.
SST 09843-18020
(f) Check DTC.

OK:

DTC 14 is not output.

HINT:
Codes other than code 14 may be output at this time, but they are not relevant to this check.

NG → **Replace steering wheel pad.**

OK

From the results of the above inspection, the malfunctioning part can now be considered normal. To make sure of this, use the simulation method to check.

5	**Check spiral cable.**

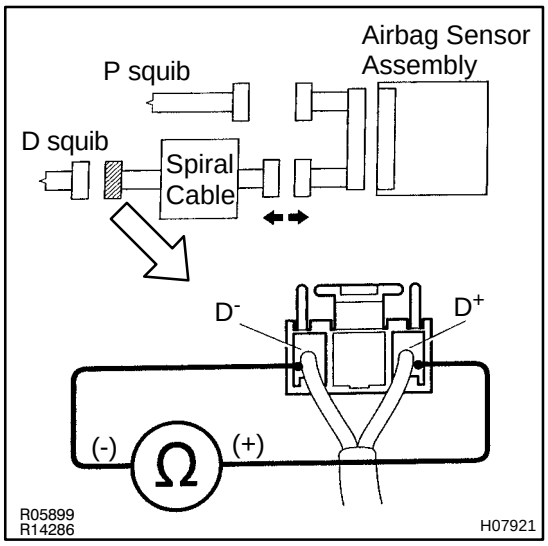

PREPARATION:
Disconnect the connector between airbag sensor assembly and spiral cable.

CHECK:
For the connector (on the spiral cable side) between the spiral cable and steering wheel pad, measure the resistance between D^+ and D^-.

OK:

Resistance: Below 1 Ω

NG → **Repair or replace spiral cable.**

OK

6	**Check harness between airbag sensor assembly and spiral cable.**

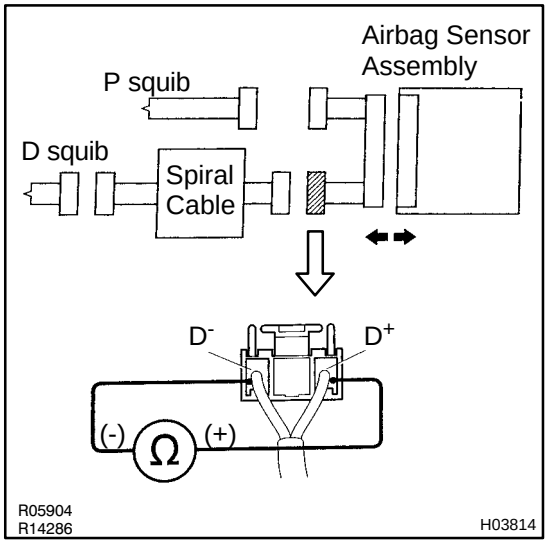

CHECK:
For the connector (on the airbag sensor assembly side) between the airbag sensor assembly and spiral cable, measure the resistance between D^+ and D^-.

OK:

Resistance: Below 1Ω

NG → **Repair or replace harness or connector between airbag sensor assembly and spiral cable.**

OK

From the results of the above inspection, the malfunctioning part can now be considered normal. To make sure of this, use the simulation method to check.

DI4WO-01

DTC	31	Airbag Sensor Assembly Malfunction

CIRCUIT DESCRIPTION

The airbag sensor assembly consists of a airbag sensor, safing sensor, drive circuit, diagnosis circuit and ignition control, etc.
It receives signals from the airbag sensors, judges whether or not the SRS must be activated, and diagnosis system malfunction.
DTC 31 is recorded when occurrence of a malfunction in the airbag sensor assembly is detected.

DTC No.	DTC Detecting Condition	Trouble Area
31	□Airbag sensor assembly malfunction.	□Airbag sensor assembly

INSPECTION PROCEDURES

HINT:
When a malfunction code other than code 31 is displayed at the same time, first repair the malfunction indicated by the malfunction code other than code 31.

1	**Preparation (See step 1 on page DI-595).**

2	**Check voltage at IG2 and ACC of airbag sensor assembly.**

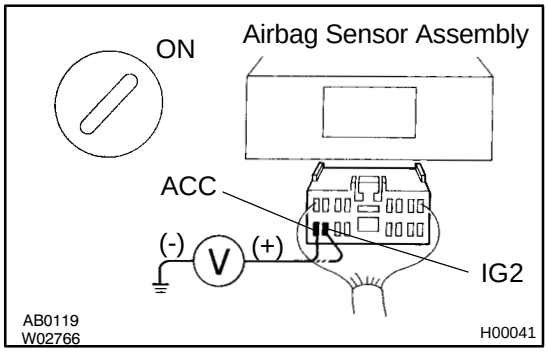

PREPARATION:
Turn the ignition switch ON.
CHECK:
Measure the voltage between terminals IG2 and ACC of airbag sensor assembly and body ground.
OK:
Voltage: Below 16 V

NG → **Check battery and charging system. (See charging system section)**

OK

3	Is DTC 31 output again?

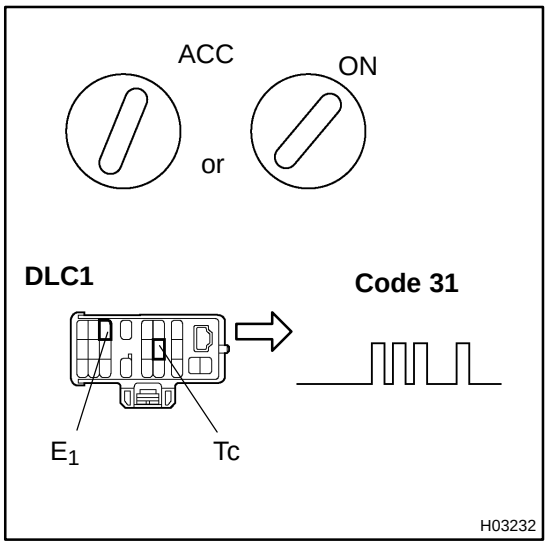

PREPARATION:

Clear malfunction code.

CHECK:

(a) Turn the ignition switch to LOCK, and wait at least 20 seconds.

(b) Turn the ignition switch to ACC or ON, and wait at least 20 seconds.

(c) Repeat operation in step (1) and (2) at least 5 times.

(d) Using SST, connect the terminals Tc and E_1 of DLC1.
SST 09843-18020

(e) Check DTC.

NO → **Using simulation method, reproduce malfunction symptoms (See page IN-18).**

YES

Replace airbag sensor assembly.

DI4WP-01

DTC	53	Short in P Squib Circuit

CIRCUIT DESCRIPTION

The P squib circuit consists of the airbag sensor assembly and front passenger airbag assembly.
It causes the airbag to deploy when the airbag deployment conditions are satisfied.
For details of the function of each component, see FUNCTION OF COMPONENTS on page RS-2 .
DTC 53 is recorded when a short is detected in the P squib circuit.

DTC No.	DTC Detecting Condition	Trouble Area
53	□Short circuit between P^+ wire harness or P^- wire harness of squib. □P squib malfunction. □Airbag sensor assembly malfunction.	□Front passenger airbag assembly (P squib) □Airbag sensor assembly □Wire harness

WIRING DIAGRAM

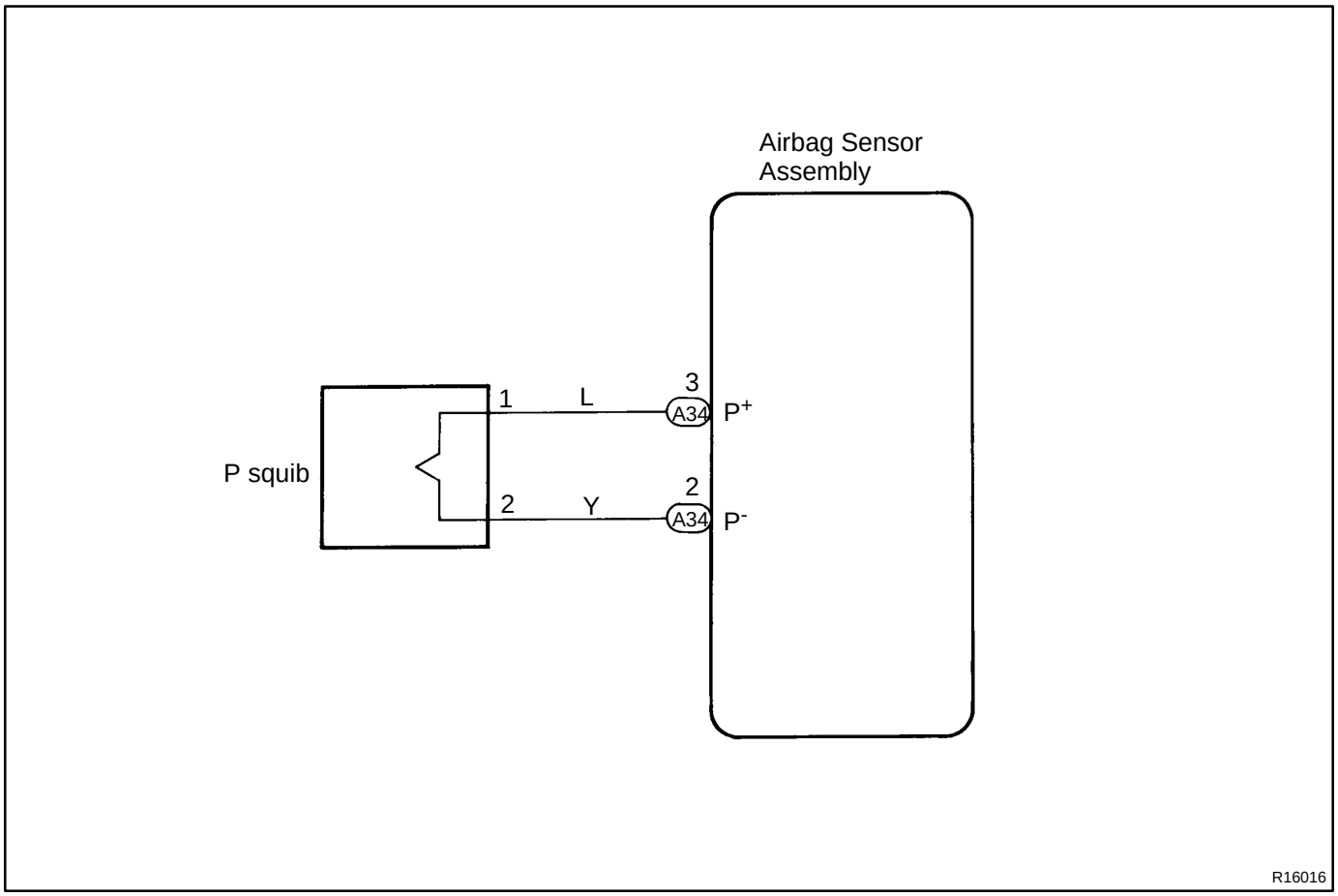

INSPECTION PROCEDURES

1	**Preparation (See step 1 on page DI-595).**

2	**Check P squib circuit.**

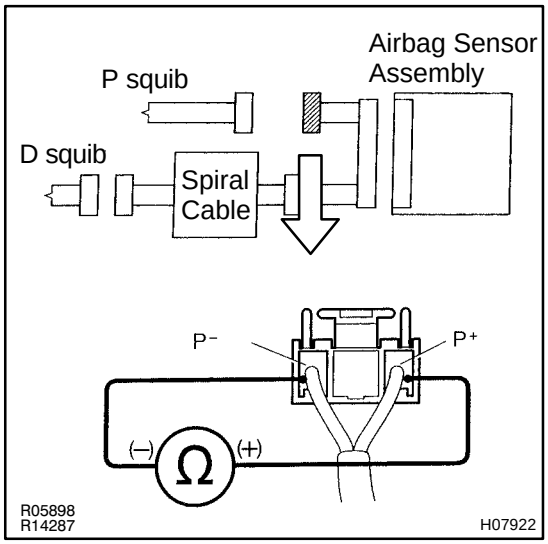

PREPARATION:

Release airbag activation prevention mechanism on airbag sensor assembly side of airbag squib connector
(See page DI-557)

CHECK:

For the connector (on the airbag sensor assembly side) between the airbag sensor assembly and front passenger airbag assembly, measure the resistance between P^+ and P^-.

OK:

Resistance: 1 MΩ or Higher

NG → **Repair or replace harness or connector between airbag sensor assembly and front passenger airbag assembly.**

OK

3	Check airbag sensor assembly.

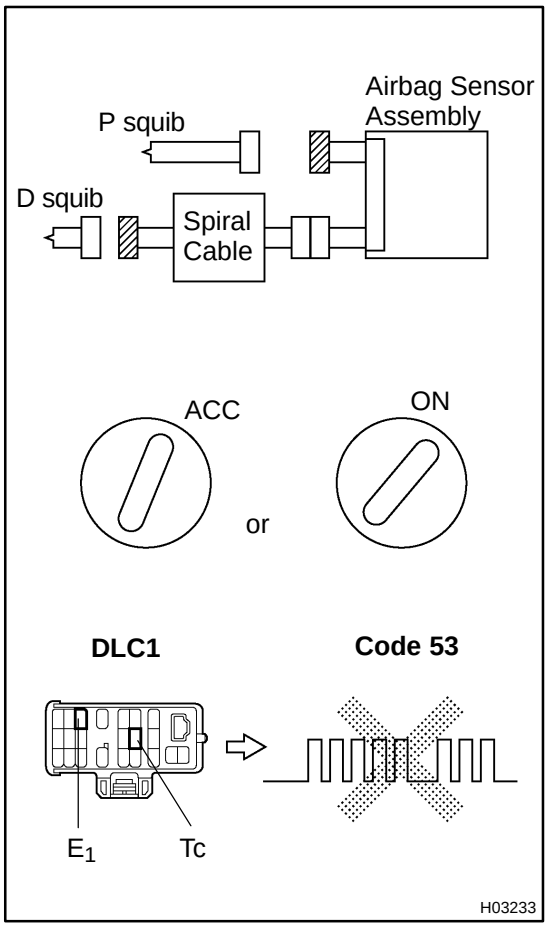

PREPARATION:

(a) Connect the connector to airbag sensor assembly.
(b) Connect negative (-) terminal cable to battery, and wait at least 2 seconds.

CHECK:

(a) Turn the ignition switch to ACC or ON and wait at least 20 seconds.
(b) Clear malfunction code stored in memory.
(See page DI-557)
(c) Turn the ignition switch to LOCK, and wait at least 20 seconds.
(d) Turn the ignition switch to ACC or ON, and wait at least 20 seconds.
(e) Using SST, connect the terminals Tc and E_1 of DLC1.
SST 09843-18020
(f) Check DTC.

OK:

DTC 53 is not output.

HINT:

Codes other than code 53 may be output at this time, but they are not relevant to this check.

NG → **Replace airbag sensor assembly.**

OK

4	Check P squib.

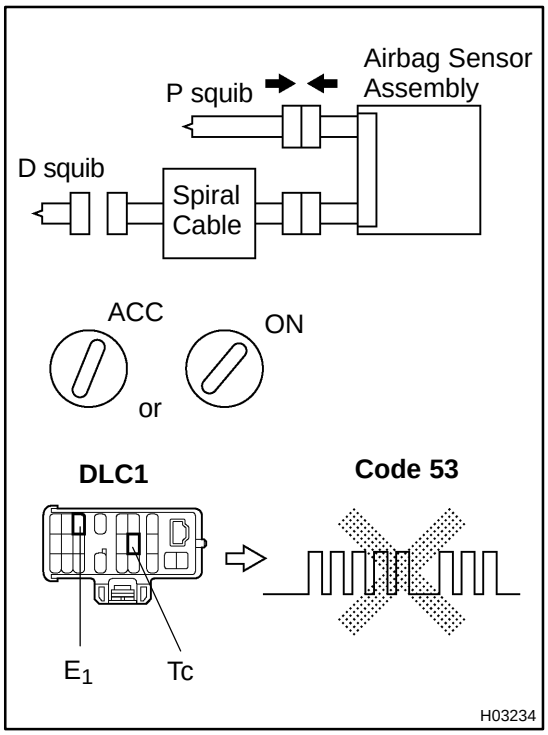

PREPARATION:

(a) Turn the ignition switch to LOCK.
(b) Disconnect negative (-) terminal cable from the battery, and wait at least 90 seconds.
(c) Connect the front passenger airbag assembly connector.
(d) Connect negative (-) terminal cable to battery, and wait at least 2 seconds.

CHECK:

(a) Turn the ignition switch to LOCK, and wait at least 20 seconds.
(b) Turn the ignition switch to ACC or ON and wait at least 20 seconds.
(c) Clear malfunction code stored in memory.
(See page DI-557)
(d) Turn the ignition switch to LOCK, and wait at least 20 seconds.
(e) Turn the ignition switch to ACC or ON, and wait at least 20 seconds.
(f) Using SST, connect the terminals Tc and E_1 of DLC1.
SST 09843-18020
(g) Check DTC.

OK:

DTC 53 is not output.

HINT:
Codes other than code 53 may be output at this time, but they are not relevant to this check.

NG → **Replace front passenger airbag assembly.**

OK

From the results of the above inspection, the malfunctioning part can now be considered normal. To make sure of this, use the simulation method to check.

DI4WQ-01

DTC	54	Open in P Squib Circuit

CIRCUIT DESCRIPTION

The P squib circuit consists of the airbag sensor assembly and front passenger airbag assembly.
It causes the airbag to deploy when the airbag deployment conditions are satisfied.
For details of the function of each component, see FUNCTION OF COMPONENTS on page RS-2 .
DTC 54 is recorded when an open is detected in the P squib circuit.

DTC No.	DTC Detecting Condition	Trouble Area
54	□Open circuit in P^+ wire harness or P^- wire harness of squib. □P squib malfunction. □Airbag sensor assembly malfunction.	□Front passenger airbag assembly (P squib) □Airbag sensor assembly □Wire harness

WIRING DIAGRAM

Refer to page DI-588 for the WIRING DIAGRAM.

INSPECTION PROCEDURES

1	**Preparation (See step 1 on page DI-595).**

2	**Check P squib circuit.**

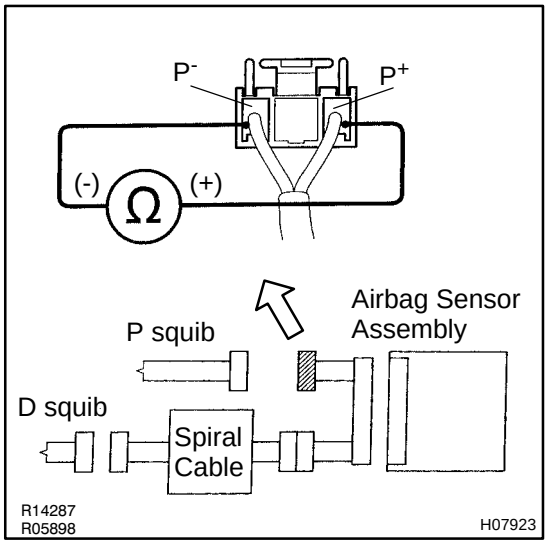

CHECK:

For the connector (on the airbag sensor assembly side) between the airbag sensor assembly and front passenger airbag assembly measure the resistance between P^+ and P^-.

OK:

Resistance: Below 1Ω

NG → **Repair or replace harness or connector between airbag sensor assembly and front passenger airbag assembly.**

OK

3	Check airbag sensor assembly.

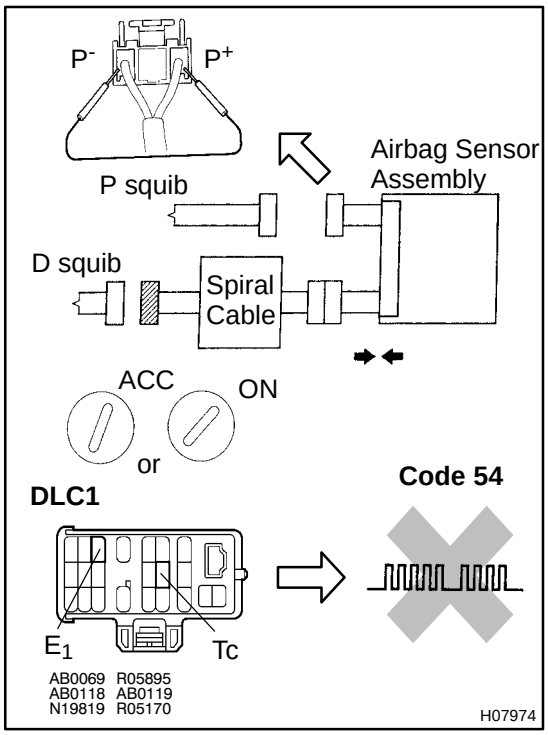

PREPARATION:

(a) Connect the connector to airbag sensor assembly.

(b) Using a service wire, connect P^+ and P^- on airbag sensor assembly side of connector between airbag sensor assembly and front passenger airbag assembly.

(c) Connect negative (-) terminal cable to battery, and wait at least 2 seconds.

CHECK:

(a) Turn the ignition switch to ACC or ON and wait at least 20 seconds.

(b) Clear malfunction code stored in memory.
(See page DI-557)

(c) Turn the ignition switch to LOCK, and wait at least 20 seconds.

(d) Turn the ignition switch to ACC or ON, and wait at least 20 seconds.

(e) Using SST, connect the terminals Tc and E_1 of DLC1.
SST 09843-18020

(f) Check DTC.

OK:

DTC 54 is not output.

HINT:

Codes other than code 54 may be output at this time, but they are not relevant to this check.

NG → **Replace airbag sensor assembly.**

OK

4	Check P squib.

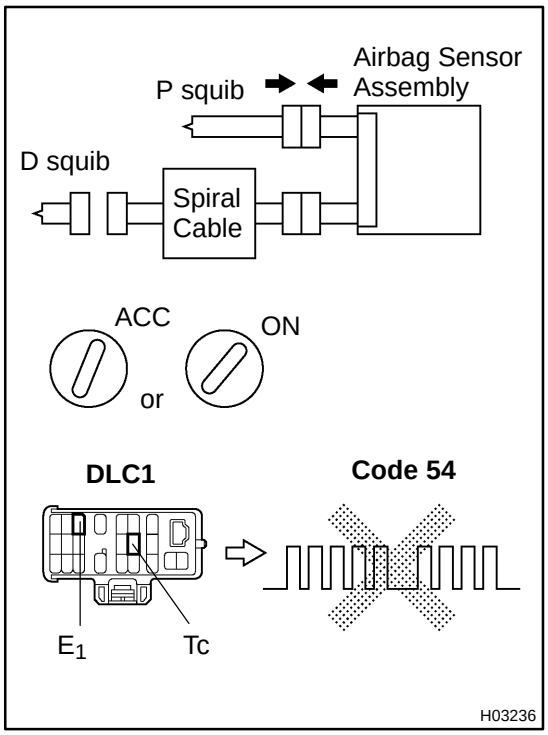

PREPARATION:

(a) Turn the ignition switch to LOCK.
(b) Disconnect negative (-) terminal cable from the battery, and wait at least 90 seconds.
(c) Connect the front passenger airbag assembly connector.
(d) Connect negative (-) terminal cable to battery, and wait at least 2 seconds.

CHECK:

(a) Turn the ignition switch to ACC or ON, and wait at least 20 seconds.
(b) Clear malfunction code stored in memory.
(See page DI-557)
(c) Turn the ignition switch to LOCK, and wait at least 20 seconds.
(d) Turn the ignition switch to ACC or ON, and wait at least 20 seconds.
(e) Using SST, connect the terminals Tc and E_1 of DLC_1.
SST 09843-18020
(f) Check DTC.

OK:

DTC 54 is not output.

HINT:
Codes other than code 54 may be output at this time, but they are not relevant to this check.

NG → **Replace front passenger airbag assembly.**

OK

From the results of the above inspection, the malfunctioning part can now be considered normal. To make sure of this, use the simulation method to check.

DI4WR-01

DTC	Normal	Source Voltage Drop

CIRCUIT DESCRIPTION

The SRS is equipped with a voltage-increase circuit (DC-DC converter) in the airbag sensor assembly in case the source voltage drops.
When the battery voltage drops, the voltage-increase circuit (DC-DC converter)functions to increase the voltage of the SRS to normal voltage.
The diagnosis system malfunction display for this circuit is different to other circuits-when the SRS warning light remains lit up and the DTC is a normal code, source voltage drop is indicated.
Malfunction in this circuit is not recorded in the airbag sensor assembly, and the source voltage returns to normal, the SRS warning light automatically goes off.

DTC No.	DTC Detecting Condition	Trouble Area
Normal	Source voltage drop.	□Battery □Airbag sensor assembly

WIRING DIAGRAM

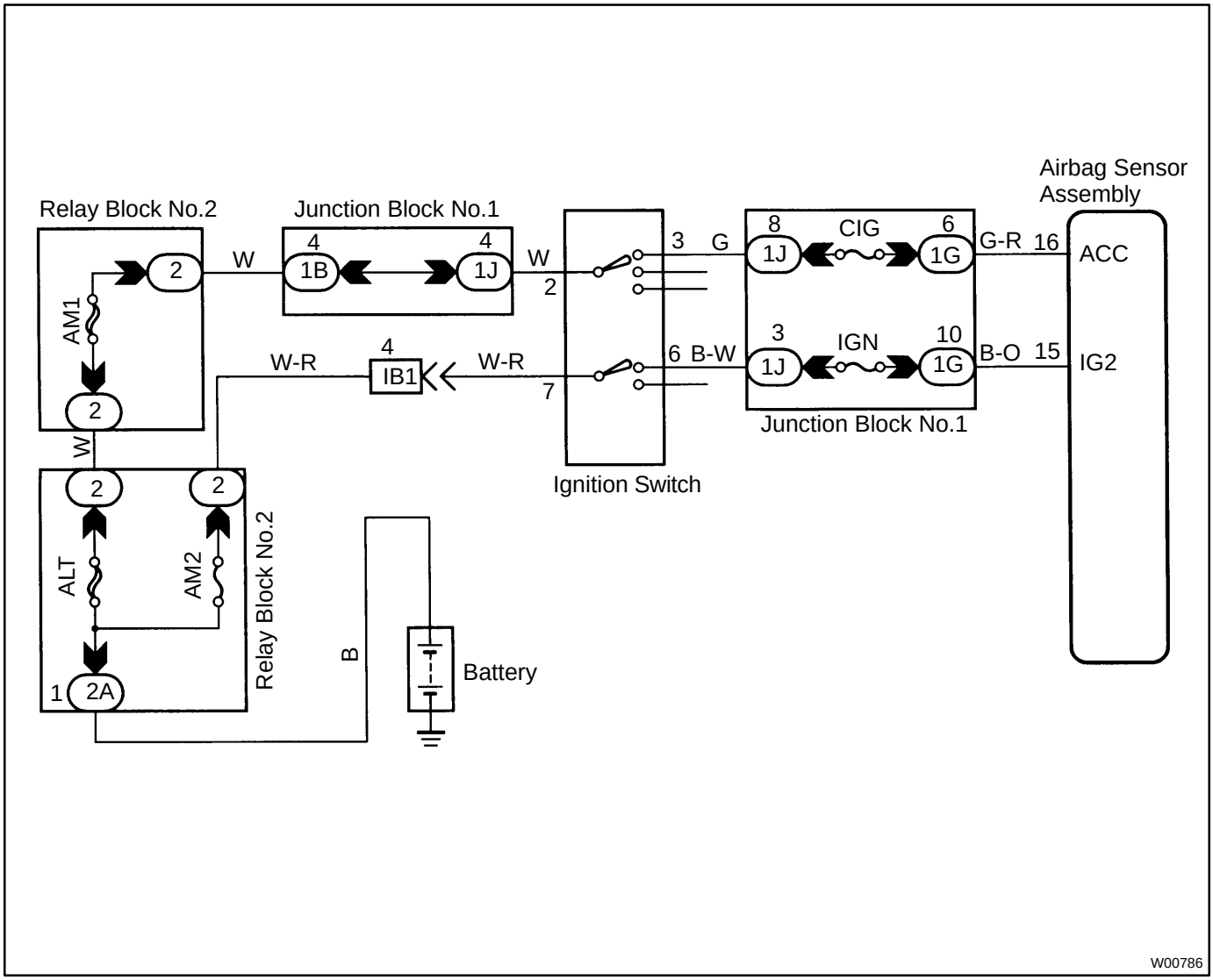

INSPECTION PROCEDURES

1	Preparation.

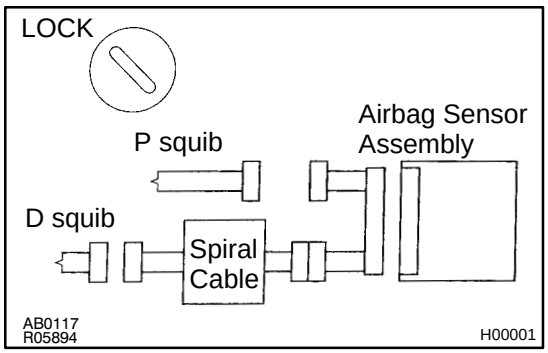

PREPARATION:

(a) Disconnect negative (-) terminal cable from the battery, and wait at least 90 seconds.
(b) Remove the steering wheel pad (See SR Section).
(c) Disconnect the connector of front passenger airbag assembly (See page RS-21).
(d) DIsconnect the connector of airbag sensor assembly (See page RS-33).

CAUTION:
Store the steering wheel pad with the front surface facing upward.

2	Check source voltage.

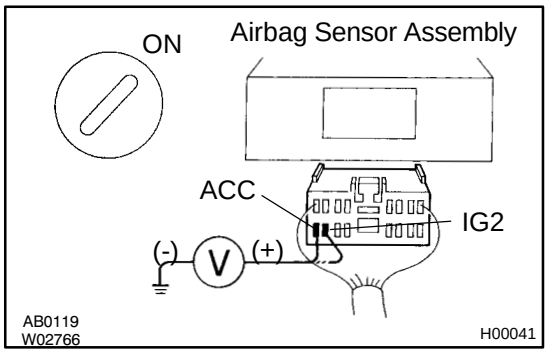

PREPARATION:

(a) Connect negative (-) terminal cable to the battery.
(b) Turn the ignition switch ON.

CHECK:

Measure the voltage at IG2 or ACC on sensor and operate electric system. (defogger, wiper, headlight, heater blower, etc)

OK:

Voltage: 10 - 14 V

NG → **Check the harness between battery and airbag sensor assembly, and check the battery and charging system.**

OK

3	**Does SRS warning light turn off ?**

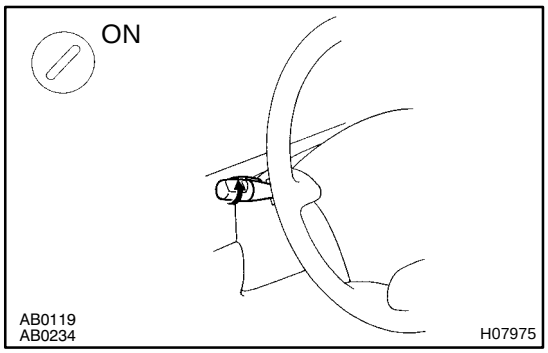

PREPARATION:

(a) Turn the ignition switch to LOCK.
(b) Connect the steering wheel pad connector.
(c) Connect the front passenger airbag assembly connector.
(d) Connect the airbag sensor assembly connector.
(e) Turn the ignition switch ON.

CHECK:

Operate electric system checked in (defogger, wiper, headlight, heater blower, etc.) and check that SRS warning light goes off.

NO → **Check for DTCs. If a DTC is output, trouble-shooting for the DTC. If a normal code is output, replace airbag sensor assembly.**

YES

From the results of the above inspection, the malfunctioning part can now be considered normal. To make sure of this, use the simulation method to check.

SRS Warning Light System Malfunction (Always lit up, when ignition switch is in LOCK position.)

CIRCUIT DESCRIPTION

The SRS warning light is located on the combination meter.
When the SRS is normal, the SRS warning light lights up for approx. 6 seconds after the ignition switch is turned from LOCK position to ACC or ON position, and then turns off automatically.
If there is a malfunction in the SRS, the SRS warning light lights up to inform the driver of the abnormality. When terminals Tc and E_1 of the DLC1 are connected, the DTC is displayed by the blinking of the SRS warning light.

WIRING DIAGRAM

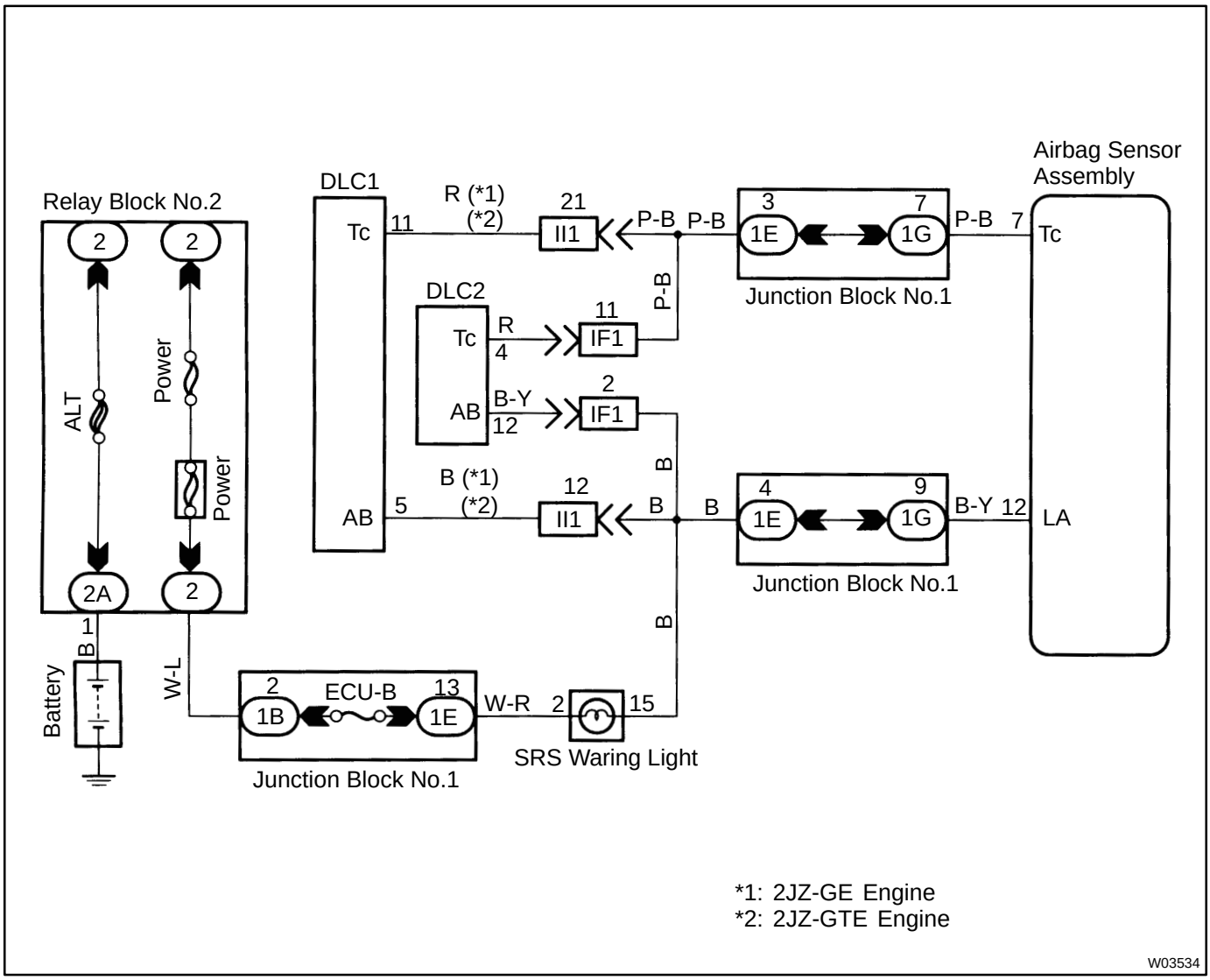

INSPECTION PROCEDURES

1	**Preparation.**

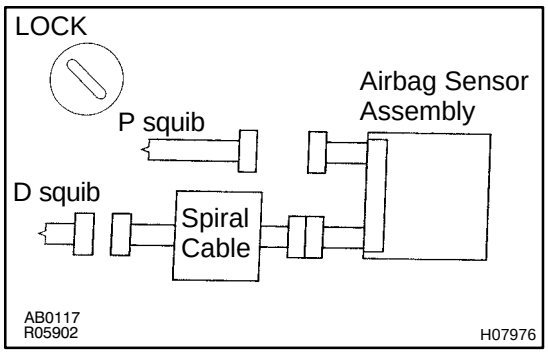

PREPARATION:

(a) Disconnect negative (-) terminal cable from the battery, and wait at least 90 seconds.
(b) Remove the steering wheel pad (See SR Section).
(c) Disconnect the connector of front passenger airbag assembly (See page RS-21).

CAUTION:

Store the steering wheel pad with the front surface facing upward.

2	**Does SRS warning light turn off?**

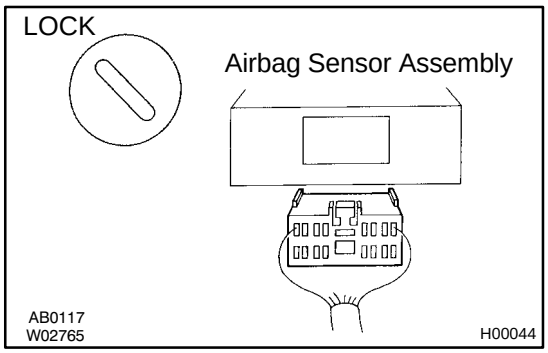

PREPARATION:

(a) Turn the ignition switch to LOCK.
(b) Disconnect negative (-) terminal cable from the battery, and wait at least 90 seconds.
(c) Disconnect the airbag sensor assembly connector.
(d) Connect negative (-) terminal cable to battery.

CHECK:

Check operation of SRS warning light.

NG → **Check SRS warning light circuit or terminal AB circuit of DLC1.**

OK

Replace airbag sensor assembly.

DI4WT-01

SRS Warning Light System Malfunction (Does not light up, when ignition switch is in turned to ACC or ON.)

CIRCUIT DESCRIPTION

The SRS warning light is located on the combination meter.
When the SRS is normal, the SRS warning light lights up for approx. 6 seconds after the ignition switch is turned from LOCK position to ACC or ON position, and then turns off automatically.
If there is a malfunction in the SRS, the SRS warning light lights up to inform the driver of the abnormality.
When terminals Tc and E_1 of the DLC1 are connected, the DTC is displayed by the blinking of the SRS warning light.

WIRING DIAGRAM

Refer to page DI-598 for the WIRING DIAGRAM.

INSPECTION PROCEDURES

1	**Check ECU-B Fuse.**

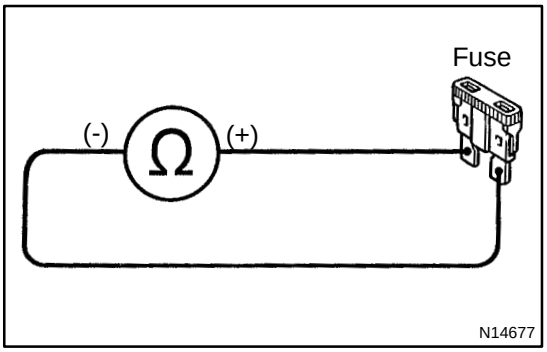

PREPARATION:
Remove the ECU-B fuse.
CHECK:
Check the continuity of ECU-B fuse.
OK:
Continuity
HINT:
- ☐ Fuse may be burnt out even if it appears to be OK during visual inspection.
- ☐ If fuse is OK, install it.

NG	**Go to step 5.**

OK

2	**Preparation (See step 1 on page DI-595).**

3	**Check SRS warning light circuit.**

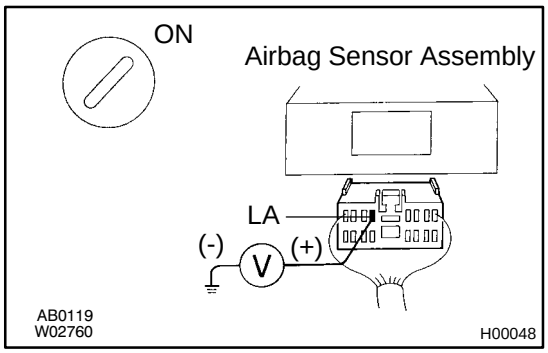

PREPARATION:

(a) Connect negative (-) terminal cable to battery.

(b) Turn the ignition switch to ACC or ON.

CHECK:

Measure the voltage LA terminal of harness side connector of airbag sensor assembly.

OK:

Voltage: 10 - 14 V

NG → **Check SRS warning light balb/repair SRS warning light circuit.**

OK

4	**Does SRS warning light come on?**

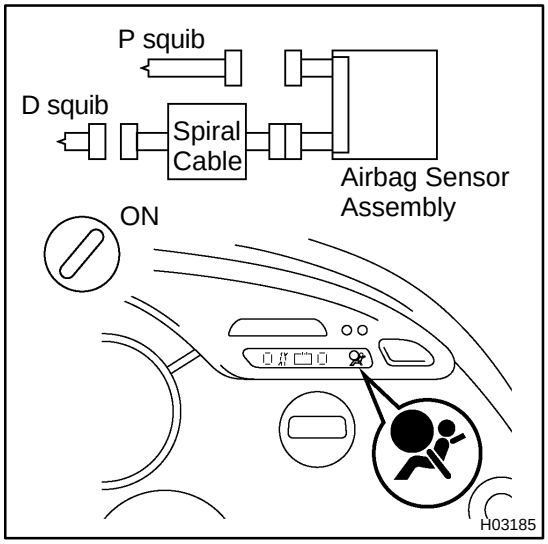

PREPARATION:

(a) Disconnect negative (-) terminal cable from the battery.

(b) Connect the airbag sensor assembly connector.

(c) Connect negative (-) terminal cable to battery, and wait at least 2 seconds.

(d) Turn the ignition switch to ACC or ON.

CHECK:

Check operation of SRS warning light.

NO → **Check terminal LA of airbag sensor assembly. If normal, replace airbag sensor assembly.**

YES

From the results of the above inspection, the malfunctioning part can now be considered normal. To make sure of this, use the simulation method to check.

5	**Is new ECU-B fuse burnt out again?**

NO → **Using simulation method, reproduce malfunction symptoms (See page IN-18).**

YES

Check harness between ECU- B fuse and SRS warning light.

DI4WU-02

Tc Terminal Circuit

CIRCUIT DESCRIPTION

By connecting terminals Tc and E_1 of the DLC1 the airbag sensor assembly is set in the DTC output mode. The DTCs are displayed by the blinking of the SRS warning light.

WIRING DIAGRAM

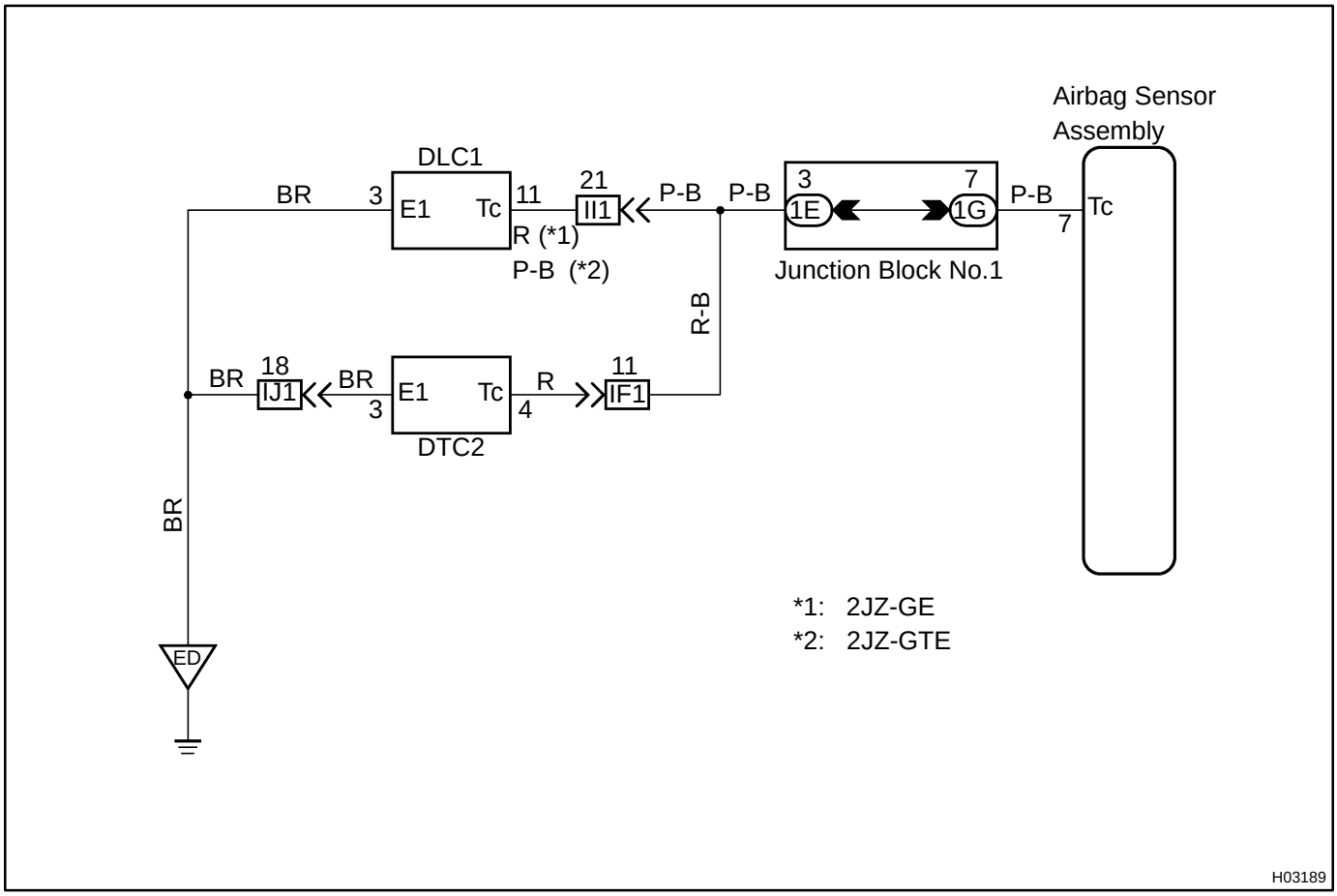

INSPECTION PROCEDURES

HINT:

If the DTC is not displayed, perform the following troubleshooting.

1	**Does SRS warning light light up for approx. 6 seconds?**

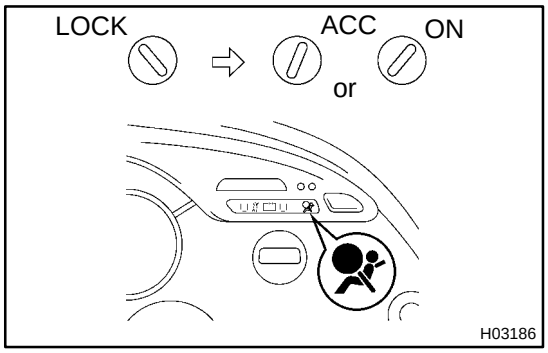

CHECK:

Check operation of SRS warning light after ignition switch is turned from LOCK position to ACC or ON position.

NO → **Check SRS warning lights system (See page DI-557).**

YES

2	**Check voltage between terminals Tc and E_1 of DLC1.**

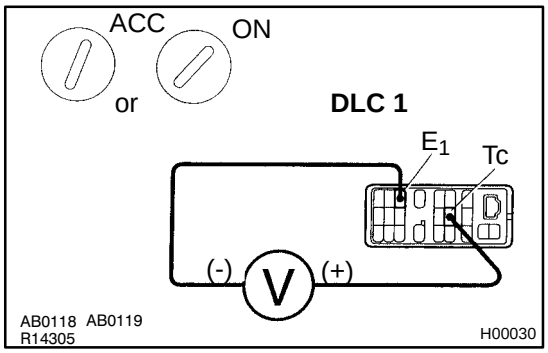

PREPARATION:

Turn the ignition switch to ACC or ON.

CHECK:

Measure the voltage between terminals Tc and E_1 of DLC1.

OK:

Voltage: 10 - 14 V

OK → **Go to step 4.**

NG

3	Check voltage between terminal Tc of DLC1 and body ground.

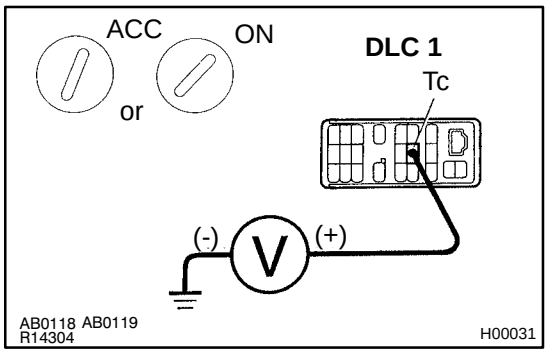

CHECK:

Measure the voltage between terminals Tc of DLC1 and body ground.

OK:

Voltage: 10 - 14 V

OK → **Check harness between terminal E_1 of DLC1 and body ground.**

NG

4	Check airbag sensor assembly.

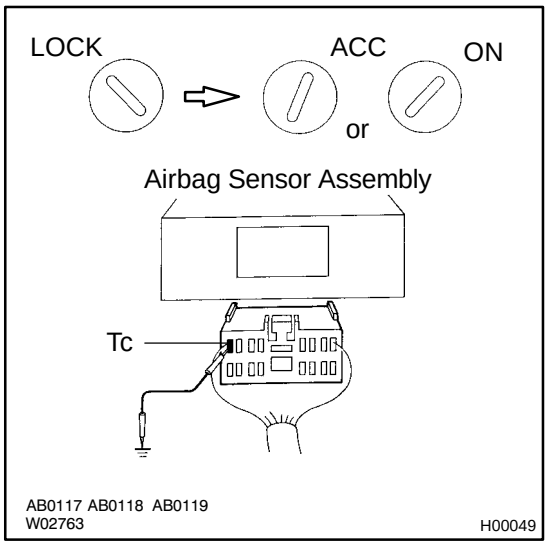

PREPARATION:

(a) Turn the ignition switch to LOCK.
(b) Disconnect negative (-) terminal cable from the battery, and wait at least 90 seconds.
(c) Remove the steering wheel pad. (See SR section)
(d) Disconnect the connector of front passenger airbag assembly. (See page RS-21)
(e) Disconnect the connector of airbag sensor assembly. (See page RS-33)
(f) Insert the service wire into terminal Tc from back side as shown.
(g) Connect the airbag sensor assembly connector with service wire.
(h) Connect negative (-) terminal cable to battery.
(i) Turn the ignition switch to ACC or ON, and wait at least 20 seconds.
(j) Connect the service wire of terminal Tc to body ground.

CHECK:

Check operation of SRS warning light.

OK:

SRS warning light comes on.

NOTICE:

Never make a mistake with the terminal connection position as this will cause a malfunction.

OK → **Check harness between airbag sensor assembly and DLC1.**

NG

Replace airbag sensor assembly.

If the DTC is displayed without a DTC check procedure, perform the following troubleshooting.

1	**Check resistance between terminal Tc of airbag sensor assembly and body ground.**

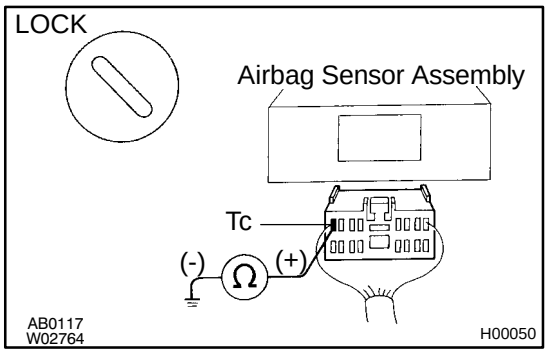

PREPARATION:

(a) Turn the ignition switch to LOCK.
(b) Disconnect negative (-) terminal cable from the battery, and wait at least 90 seconds.
(c) Disconnect the airbag sensor assembly connector.

CHECK:

Check the resistance between terminal Tc of airbag sensor assembly connector and body ground.

OK:

Resistance: 1 MΩ or higher

NG → **Repair or replace harness or connector.**

OK

Replace airbag sensor assembly.

THEFT DETERRENT SYSTEM

HOW TO PROCEED WITH TROUBLESHOOTING

DI4WV-01

HINT:

Troubleshooting of the theft deterrent system is based on the premise that the door lock control system is operating normally. Accordingly, before troubleshooting the theft deterrent system, first make certain that the door lock control system is operating normally.

For troubleshooting using a volt/ohm meter, see page DI-615 .

Be sure to use troubleshooting procedure appropriate to the diagnostic tool being used.

Perform troubleshooting in accordance with the procedure on the following page.

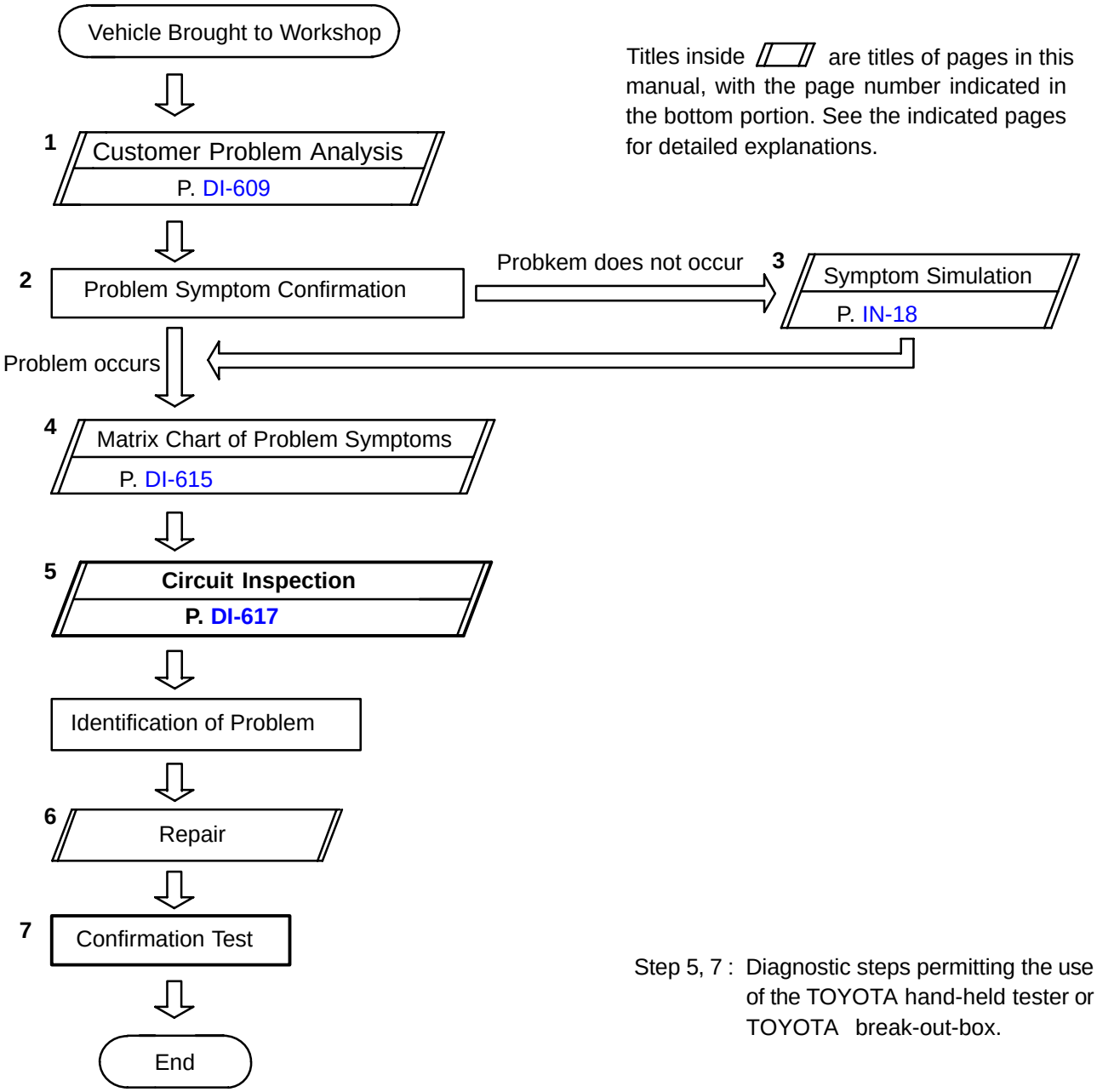

Titles inside ▱ are titles of pages in this manual, with the page number indicated in the bottom portion. See the indicated pages for detailed explanations.

Step 5, 7 : Diagnostic steps permitting the use of the TOYOTA hand-held tester or TOYOTA break-out-box.

DI4WW-01

CUSTOMER PROBLEM ANALYSIS CHECK

THEFT DETERRENT SYSTEM Check Sheet

Inspector's name: _____

Customer's Name		**Registration No.**	
		Registration Year	
		Frame No.	
Date of Vehicle Brought in	/ /	**Odometer Reading**	**km Mile**

Date Problem First Occurred		/ /
Frequency Problem Occurs		☐ Constant ☐ Sometimes (Times per day, month) ☐ Once only
Weather Conditions When Problem Occurred	**Weather**	☐ Fine ☐ Cloudy ☐ Rainy ☐ Snowy ☐ Various/Others
	Outdoor temperature	☐ Hot ☐ Warm ☐ Cool ☐ Cold (Approx. °F (°C))

Problem Symptom

☐ Theft deterrent system cannot be set.		
☐ Indicator light does not flash when the theft deterrent system is set. (It stays on or does not light at all.)		
☐ Theft deterrent system does not operate.	☐ When unlocked using the door lock knob. ☐ When the engine hood is opened.	Malfunction ☐ Horns only ☐ Theft deterrent horn only ☐ Headlights only ☐ Taillights only ☐ Starter cut only ☐ Door lock operation only
☐ System cannot be canceled once set.	☐ When door is unlocked using key or wireless door lock control system. ☐ When the key is inserted in the ignition key cylinder and turned to ACC or ON position. (However, only when the system has never operated) ☐ When the luggage compartment door is opened with the key.	
☐ System cannot be canceled during warning operation.	☐ When door is unlocked using key or wireless door lock control system. ☐ When the key is inserted in the ignition key cylinder and turned to ACC or ON position.	
☐ Warning operation starts when the system is set and the door or luggage compartment door is opened with the key.		
☐ Others.		

DI4WX-01

PRE-CHECK

1. Setting Conditions:

SETTING OF THE THEFT DETERRENT SYSTEM

(a) Close all the doors.
(b) Close the engine hood and luggage compartment door.
(c) Remove the ignition key from the ignition key cylinder.

2. Setting Operation:

SETTING OF THE THEFT DETERRENT SYSTEM

When any of the following operations (a) or (c) is done, the theft deterrent indicator light will light up as described.

(1) Lock the left or right front door using the key. (All doors are locked by key-interlinked lock operation)
(2) With the rear doors locked and with one of the front doors locked, lock the other front door without using the key (keyless door lock).

Elapsed time after operation	Indicator light
Within about 30 seconds	Light up
After about 30 seconds	Blinks *1

*1: 1 sec. on, 1 sec. off

HINT:

When the theft deterrent system is set, doors cannot be locked or unlocked with the door lock control switch and the luggage compartment door cannot be unlocked with the luggage compartment door opener switch.

3. Cancelling Operation:

CANCELING OF THE THEFT DETERRENT SYSTEM IN THE SET CONDITION

HINT:

- □ Check if the theft deterrent indicator light is blinking.
- □ When any of the following operation (a), (b), (c) or (d) is done, the theft deterrent system is canceled and indicator light will go off.

(a) Unlock the left or right front door using the key.
(b) Insert the ignition key in the ignition key cylinder and turn it to the ACC or ON position. (This is operative only when the theft deterrent system has never operated.)
(c) Unlock the luggage compartment door with the key. *1

*1: The theft deterrent systems is temporarily canceled only while the luggage compartment door is open. Approximately 2 seconds after the luggage compartment door is closed, the theft deterrent system is reset.

4. CHECK OF THE THEFT DETERRENT SYSTEM OPERATION.

HINT:

Check if the theft deterrent indicator light is blinking.

When any of the following operations (a) or (b) is done, the system sounds the horns as theft deterrent horn and flashes the headlights and taillights for about one minute to alert. At the same time, the system disconnects the starter motor circuit and locks all doors (if all doors are not locked, the system repeats door locking operation every 2 seconds during the one minute alert time).

(a) Open the engine hood using the engine hood opener lever.

(b) Unlock any of the front or rear doors without key operation.

5. CANCELING OF THE THEFT DETERRENT SYSTEM IN OPERATING CONDITION.

The theft deterrent operation can be cancelled when any of the following conditions is met:

No.	Condition	Cancelling Operation
1	Unlock left or right door with the key.	●
2	Unlock doors with wireless door lock control system.	●
3	Insert key into ignition key cylinder and turn it to the ACC or ON position.	● *2
4	About 1 minute passes after theft deterrent operation begins.	Automatic stop*1

*1: In this case, the theft deterrent system resets in about 2 seconds if all doors are closed.

*2: The alarm will be off, but the engine will not operate. To restart the engine, see No.1

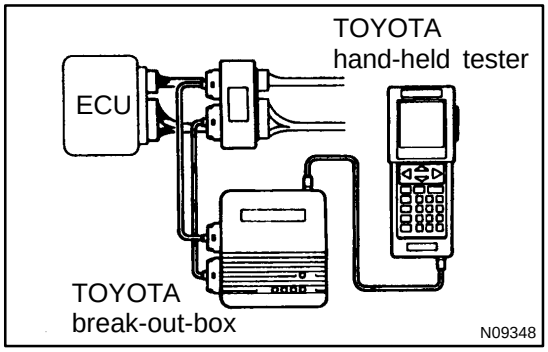

6. ECU TERMINAL VALUES MEASUREMENT USING TOYOTA BRAKE-OUT-BOX AND TOYOTA HAND-HEID TESTER

(a) Hook up the TOYOTA brake- out- box and TOYOTA hand-held tester to the vehicle.

(b) Read the ECU input/output values by following the prompts on the hand-held tester screen.

HINT:

TOYOTA hand-held tester has a ”Snapshot” function. This records the measured values and is effective in the diagnosis of intermittent problems.

Please refer to the TOYOTA hand-held tester/TOYOTA break-out-box operator’s manual for further details.

DI4WY-01

PARTS LOCATION

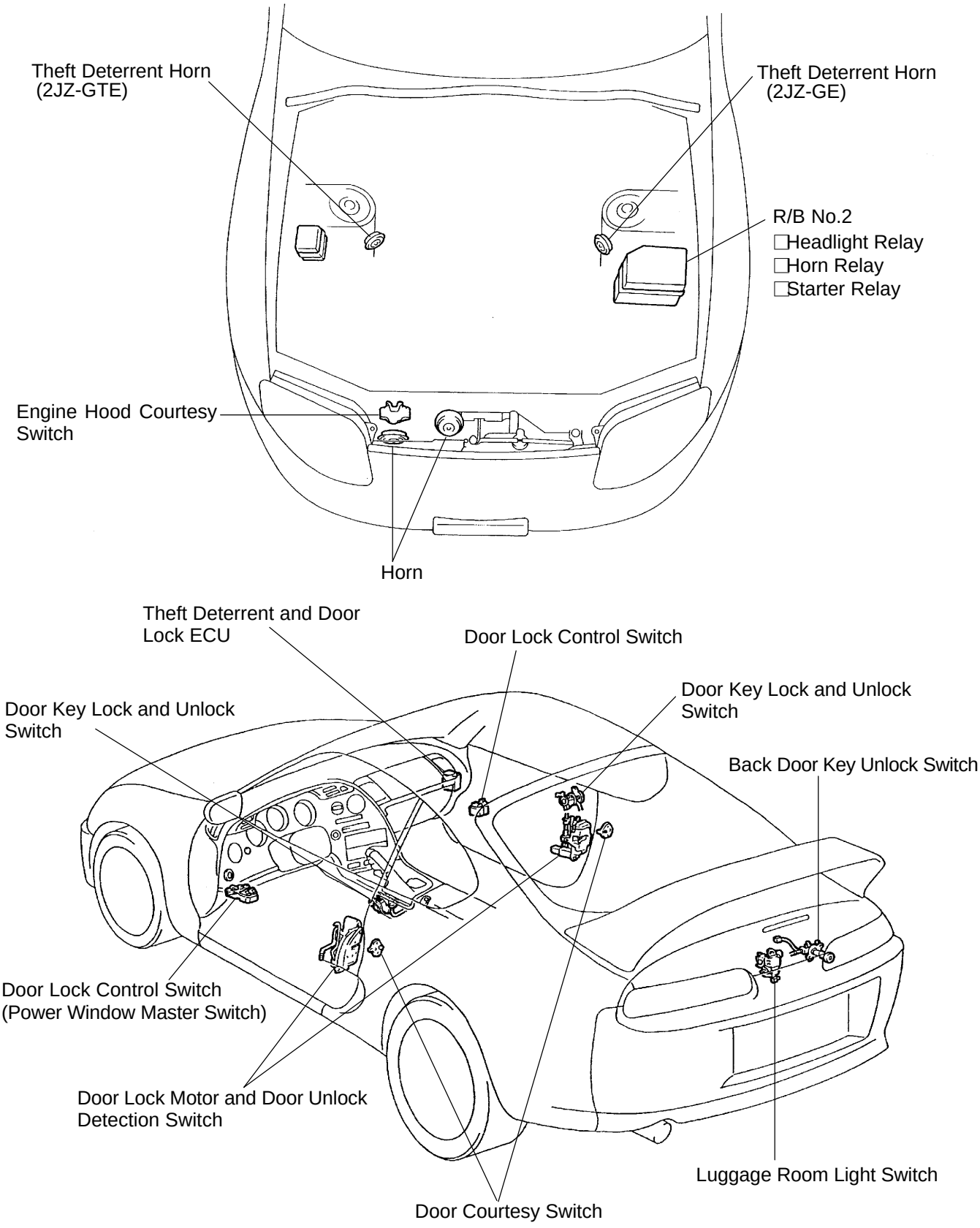

I02535

DI4WZ-01

TERMINALS OF ECM

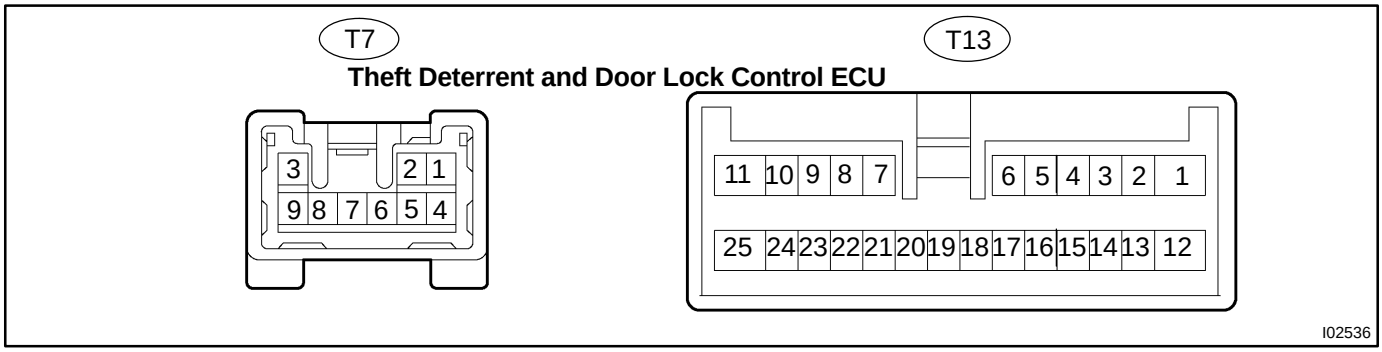

Terminals	Symbols	Condition	Standard Value
+B2 ↔ Ground (T7-9 ↔ Ground)	L-W ↔ Ground	Always.	10 - 14 V
ACT- ↔ ACT+ (T7-2 ↔ T7-3)	L-Y ↔ L-R	Ignition switch is turned to "OFF" position.	Below 50Ω
RLY ↔ Ground (T7-6 ↔ Ground)	Y ↔ Ground	Ignition switch is turned to "ON" position.	10 - 14 V
IG ↔ Ground (T7-7 ↔ Ground)	B-R ↔ Ground	Ignition switch is turned to "ON" position.	10 - 14 V
ACC ↔ E (T7-8 ↔ T7-4)	L-R ↔ W-B	Ignition switch is turned to "ACC" position.	10 - 14 V
+B1 ↔ Ground (T13-1 ↔ Ground)	R ↔ Ground	Always.	10 - 14 V
DSWL ↔ E (T13-4 ↔ T7-4)	LG ↔ W-B	Luggage compartment door courtesy switch ON (door opened).	Below 1 Ω
		Luggage compartment door courtesy switch OFF (door closed).	1 MΩ or higher
L1 ↔ E (T13-5 ↔ T7-4)	R-W ↔ W-B	Door lock control switch "lock" position.	Below 1 Ω
		Door lock control switch OFF or "unlock" position.	1 MΩ or higher
UL3 ↔ E (T13-6 ↔ T7-4)	G ↔ W-B	Door key lock and unlock switch "unlock" position.	Below 1Ω
		Door key lock and unlock switch OFF or "lock" position.	1MΩ or higher
DSWD ↔ E (T13-7 ↔ T7-4)	R-B ↔ W-B	Door open detection switch (driver's) ON (door opened).	Below 1Ω
		Door open detection switch (driver's) OFF (door closed).	1MΩ or higher
UL1 ↔ E (T13-8 ↔ T7-4)	G-R ↔ W-B	Door lock control switch "unlock" position.	Below 1Ω
		Door lock control switch OFF or "lock" position.	1MΩ or higher
LUG ↔ E (T13-9 ↔ T7-4)	L ↔ W-B	Luggage compartment door key lock and unlock switch ON.	Below 1Ω
		Luggage compartment door key lock and unlock switch OFF.	1MΩ or higher
HEAD ↔ E (T13-10↔ T7-4)	R-Y ↔ W-B	Light control switch other than "HEAD" position.	10 - 14 V
SH ↔ E (T13-11 ↔ T7-4)	P-B ↔ W-B	Always.	10 - 14 V
IND ↔ Ground (T13-12 ↔ Ground)	W-L ↔ Ground	Always.	Below 270 Ω
DSWH ↔ E (T13-14 ↔ T7-4)	G-R ↔ W-B	Engine hood courtesy switch ON (hood opened).	Below 1Ω
		Engine hood courtesy switch OFF (hood closed).	1MΩ or higher
LSWD ↔ E (T13-15 ↔ T7-4)	L-W ↔ W-B	Door unlock detection switch ON (door opened).	Below 1Ω
		Door unlock detection switch OFF (door closed).	1MΩ or higher
UL2 ↔ E (T13-16 ↔ T7-4)	W ↔ W-B	Door key lock and unlock switch "unlock" position.	Below 1Ω
		Door key lock and unlock switch OFF or "lock" position.	1MΩ or higher
DSWP ↔ E (T13-19 ↔ T7-4)	R-L ↔ W-B	Door open detection switch (passenger's) ON (door opened).	Below 1Ω
		Door open detection switch (passenger's) OFF (door closed).	1MΩ or higher
KSW ↔ E (T13-20 ↔ T7-4)	Y ↔ W-B	Key unlock warning switch ON.	Below 1Ω
		Key unlock warning switch OFF.	1MΩ or higher

LSWP ↔ E (T13-21 ↔ T7-4)	G-B ↔ W-B	Door unlock detection switch ON (door opened).	Below 1Ω
		Door unlock detection switch OFF (door closed).	1MΩ or higher
L2 ↔ E (T13-22 ↔ T7-4)	G-Y ↔ W-B	Door key lock and unlock switch ”lock” position.	Below 1Ω
		Door key lock and unlock switch OFF or ”unlock” position.	1MΩ or higher
TAIL ↔ E (T13-23 ↔ T7-4)	G-W ↔ W-B	Light control switch ”TAIL” position.	10 - 14 V
HORN ↔ E (T13-24 ↔ T7-4)	L-R ↔ W-B	Horn switch OFF.	10 - 14 V
SRLY ↔ Ground (T13-25 ↔ Ground)	L-O ↔ Ground	Ignition switch is turned to ”ST” position. (When park/neutral position switch ”P” position.)	10 - 14 V

DI4X0-01

PROBLEM SYMPTOMS TABLE

Proceed to the reference page shown in the matrix chart below for each malfunction symptom and troubleshoot for each circuit.

HINT:

Troubleshooting of the theft deterrent system is based on the premise that the door lock control system is operating normally. Accordingly, before troubleshooting the theft deterrent system, first make certain that the door lock control system is operating normally.

Theft Deterrent System:

Details of Problem	Inspecting Circuit *1	See page
The theft deterrent system cannot be set	1. Indicator light circuit	DI-617
	2. Luggage compartment door key lock and unlock switch circuit	DI-633
	3. Luggage compartment door courtesy switch circuit	DI-636
	4. Door courtesy switch circuit	DI-640
	5. Engine hood courtesy switch circuit	DI-642
The indicator light does not blink when system is set	Indicator light circuit	DI-617
□When the system is set □When the back door is opened by a method other than the key □The system does not operate	Luggage compartment door courtesy switch circuit	DI-636
□When the system is set □When the engine hood is opened □The system does not operate	Engine hood courtesy switch circuit	DI-642
□While the system is in warning operation □Horns do not sound	Horn relay circuit	DI-621
□While the system is in warning operation □Theft deterrent horn does not sound	Theft deterrent horn circuit	DI-623
□While the system is in warning operation □Headlights do not flash	Headlight control relay circuit	DI-626
□While the system is in warning operation □Taillights do not flash	Taillight control relay circuit	DI-628
□While the system is in warning operation □The starter cut is not cut off	Starter relay circuit	DI-619
□When the system is set □It is not canceled when the ignition key is turned to ACC or ON position	Ignition switch circuit	DI-630
□When the system is set □It still operates when the back door is opened with the key	Luggage compartment door key lock and unlock switch circuit	DI-633
System is still set even when a rear door is open	Door courtesy switch circuit	DI-640
□Even when the system is not set □Horns sound	Horn relay circuit	DI-621
□Even when the system is not set □Theft deterrent horn sounds	Theft deterrent horn circuit	DI-623
□Even when the system is not set □Headlights stay on	Headlight control relay circuit	DI-626
□Even when the system is not set □Taillights stay on	Taillight control relay circuit	DI-628

*1: If numbers are given to the circuit proceed with troubleshooting in the order indicated by those numbers.

Door Lock System:

Trouble	Suspect Area	See page
Whole function of the door lock control system does not operate.	1. ECU Power Source Circuit 2. Actuator Power Source Circuit 3. Door Lock Motor Circuit 4. Theft Deterrent and Door Lock Control ECU	DI-644 DI-647 DI-650 DI-623
All doors or some doors are not locked and unlocked with the door lock control switch and key lock and unlock switch.	1. Door Lock Control Switch Circuit 2. Door key Lock and Unlock Switch Circuit 3. Door Lock Motor Circuit 4. Theft Deterrent and Door Lock Control ECU	DI-653 DI-656 DI-650 DI-623
Doors cannot be locked with the door lock control switch. (Doors lock and unlock normally with the key lock and unlock switch.)	1. Door Lock Control Switch Circuit 2. Key Unlock Warning Switch Circuit 3. Door Courtesy Switch Circuit 4. Theft Deterrent and Door Lock Control ECU	DI-653 DI-658 DI-640 DI-623
Doors are not locked or unlocked with the door key lock and unlock switch. (Doors lock and unlock normally with the door lock control switch.)	1. Door Key Lock and Unlock Switch Circuit 2.Theft Deterrent and Door Lock Control ECU	DI-656 DI-623
Key confinement prevention function does not operate. (Doors lock and unlock normally with the door key lock and unlock switch.)	1. Key Unlock Warning Switch Circuit 2. Door Unlock Detection Switch CIrcuit 3. Theft Deterrent and Door Lock Control ECU	DI-658 DI-638 DI-623

DI4X1-01

CIRCUIT INSPECTION

Indicator Light Circuit

CIRCUIT DESCRIPTION

When the theft deterrent system is preparing to set, this circuit lights up the indicator light. When the system has been set, it continually turns the indicator light on for 1 second and turns it off for 1 second, thus blinking the indicator light.

WIRING DIAGRAM

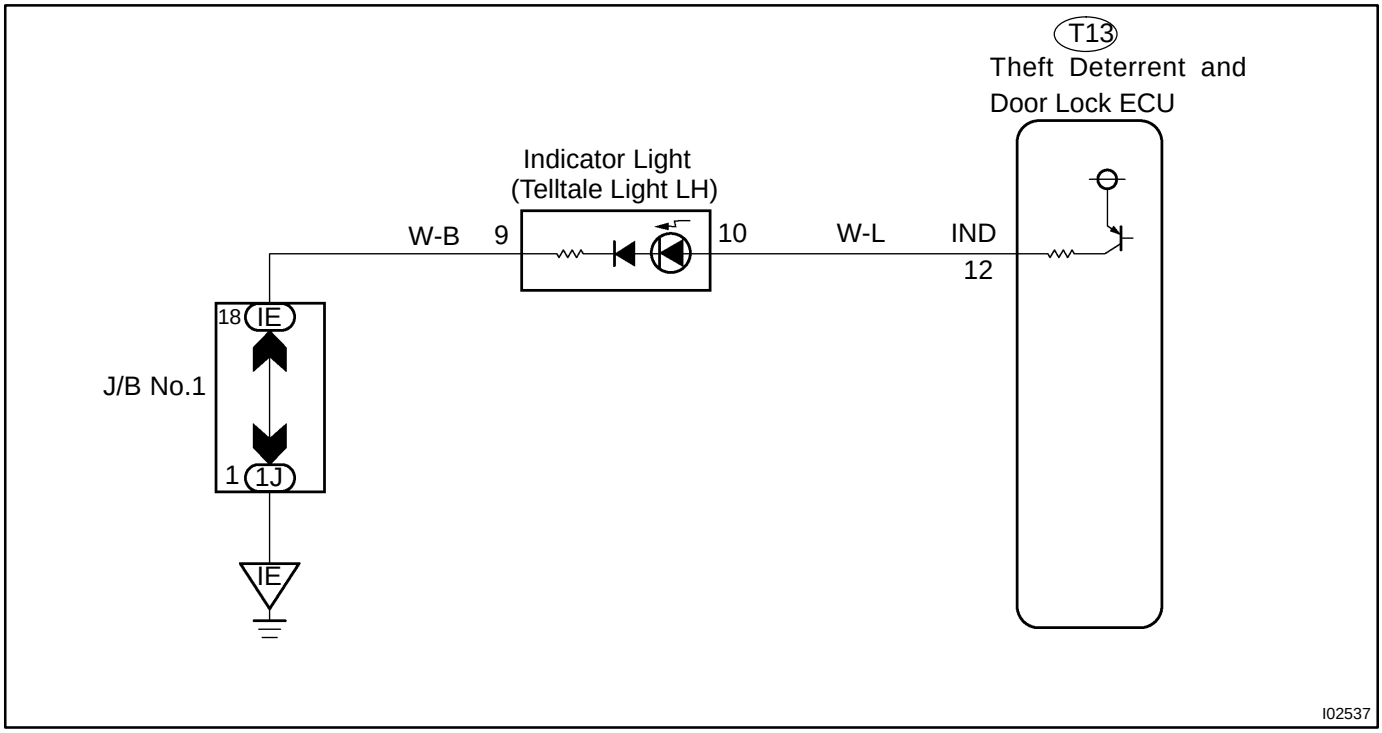

INSPECTION PROCEDURE

1	**Check indicator light.**

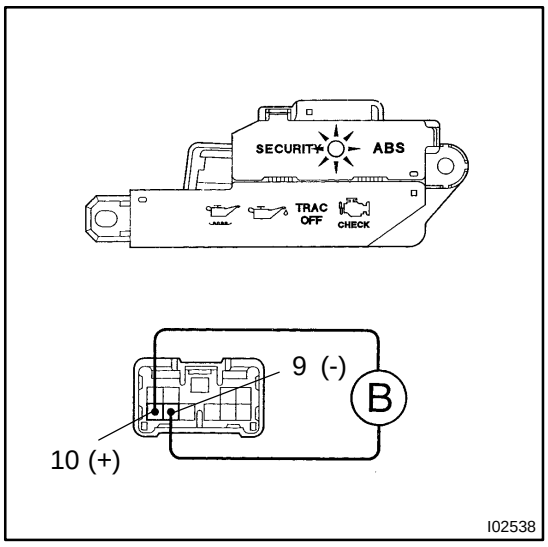

PREPARATION:

(a) Remove instrument panel cluster finish panel.

(b) Disconnect telltale light RH connector.

CHECK:

Connect positive ⊕ lead to terminal 10 and negative ⊖ lead to terminal 9 of indicator light connector.

OK:

Indicator light comes on.

NG → **Replace telltale light RH.**

OK

2	**Check harness and connector between theft deterrent and door lock ECU and indicator light, indicator light and body ground (See page IN-28).**

NG → **Repair or replace harness or connector.**

OK

Check and replace theft deterrent and door lock ECU. *1

*1: When there is a malfunction that the theft deterrent system cannot be set, proceed to the next numbered circuit inspection shown on matrix chart (See page DI-615).

DI4X2-01

Starter Relay Circuit

CIRCUIT DESCRIPTION

When the theft deterrent system is activated, contact "a" in the ECU becomes open, creating an open circuit in terminal ST circuit and making the starter inoperative (starter cut).
In this condition, if one of the following operations is done, the contact "a" in the ECU is grounded, thus canceling the starter cut:

(1) The front LH and RH door is unlocked with a key.

WIRING DIAGRAM

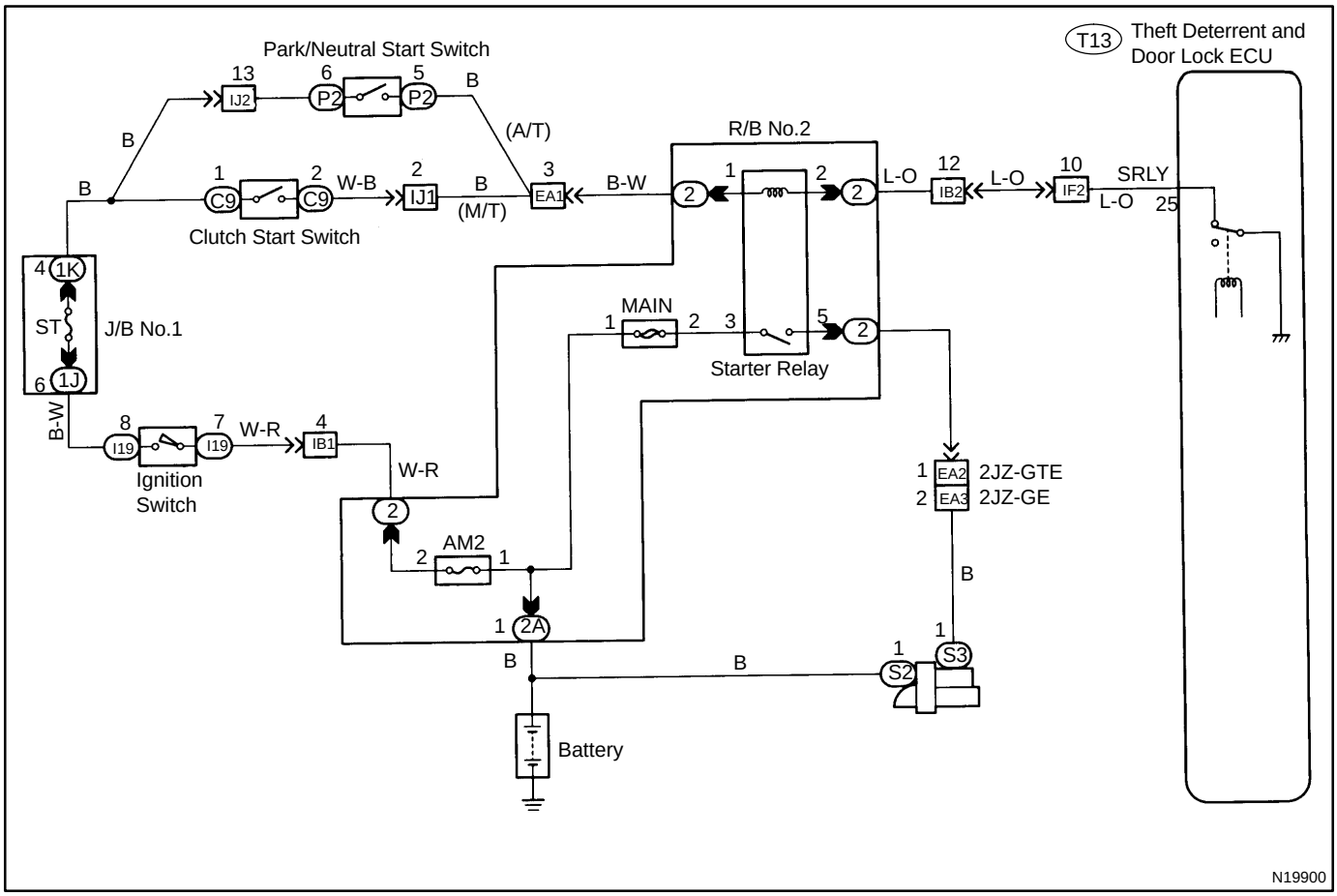

INSPECTION PROCEDURE

HINT:

This troubleshooting is based on the premise that engine cranking occurs.

If the engine does not crank, proceed to the engine troubleshooting on page DI-3 or DI-141 (Vol. 1).

1	**Check voltage between terminal SRLY of theft deterrent and door lock ECU connector and body ground.**

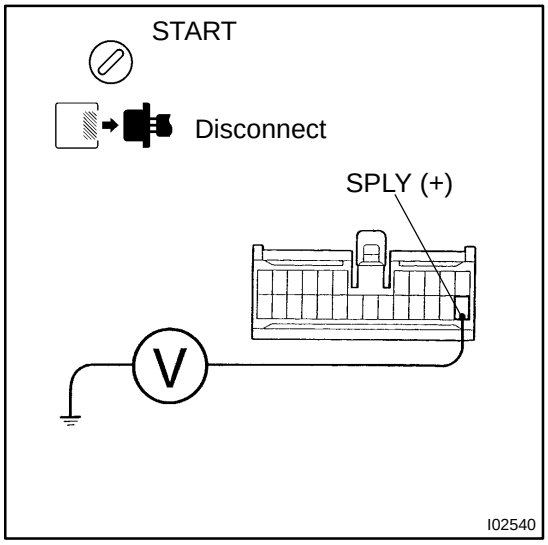

PREPARATION:

(a) Remove the instrument panel. (See page BO-50)

(b) Disconnect the ECU connector.

CHECK:

Measure voltage between terminal SRLY of theft deterrent ECU connector and body ground, when ignition switch is turned to ST position.

OK:

Voltage: 10 - 14 V

OK → **Check and replace theft deterrent ECU.**

NG

Check and repair harness and connector between starter and theft deterrent and door lock ECU (See page IN-28).

DI4X3-01

Horn Relay Circuit

CIRCUIT DESCRIPTION

When the theft deterrent system is activated, it causes the Tr in the ECU to switch on and off in approximately 0.2 sec. cycles. This switches the horn relay on and off, thus the horn blow (See the wiring diagram below). In this condition, if any of the following operations is done, the Tr in the ECU goes off and the horn relay switches off, thus the horns stop blowing:

(1) The front LH or RH door is unlocked with a key.
(2) The ignition switch is turned to the ACC or ON position.
(3) Approximately 1 minute elapses.

WIRING DIAGRAM

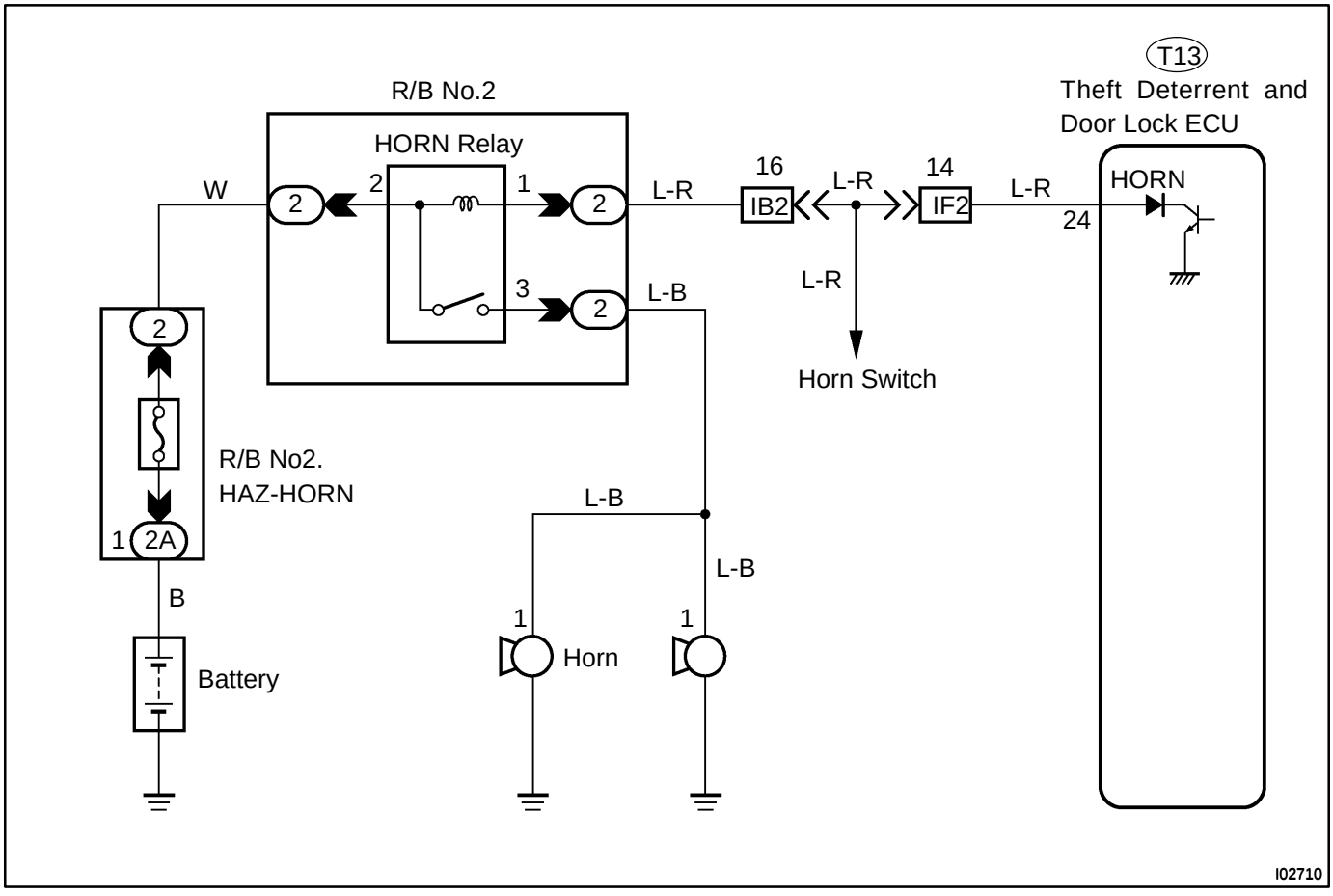

INSPECTION PROCEDURE

1	**Check voltage between terminal HORN of theft deterrent and door lock ECU connector and body ground.**

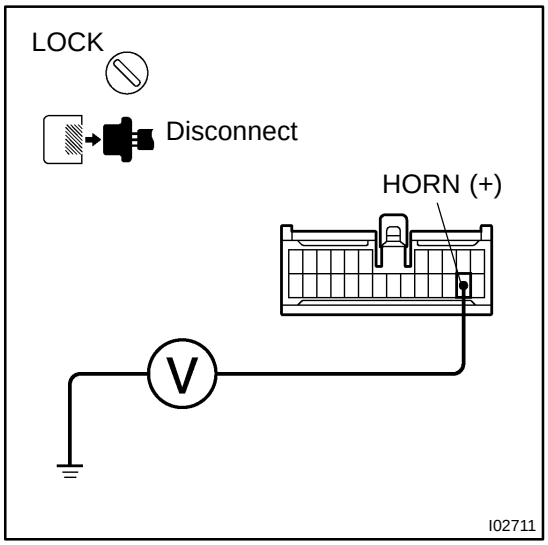

PREPARATION:

(a) Remove the instrument panel. (See page BO-50).

(b) Disconnect the ECU connector.

CHECK:

Measure voltage between terminal HORN of theft deterrent ECU connector and body ground.

OK:

Voltage : 10 - 14 V

OK → **Check and replace theft deterrent and door lock ECU.**

NG

Check and repair harness and connector between theft deterrent and door lock ECU and horn relay (See page IN-28).

DI4X4-01

Theft Deterrent Horn Circuit

CIRCUIT DESCRIPTION

When the theft deterrent system is activated, contact "a" and contact "b" in the ECU close alternately in cycles of approximately 0.2 sec., causing the theft deterrent horn to blow (See the wiring diagram below).
In this condition, if any of the following operations is done, the contact "a" in the ECU opens, thus stopping the theft deterrent horn from blowing:

(1) The front LH or RH door is unlocked with a key.
(2) The ignition switch is turned to the ACC or ON position.
(3) Approximately 1 minute elapses.

WIRING DIAGRAM

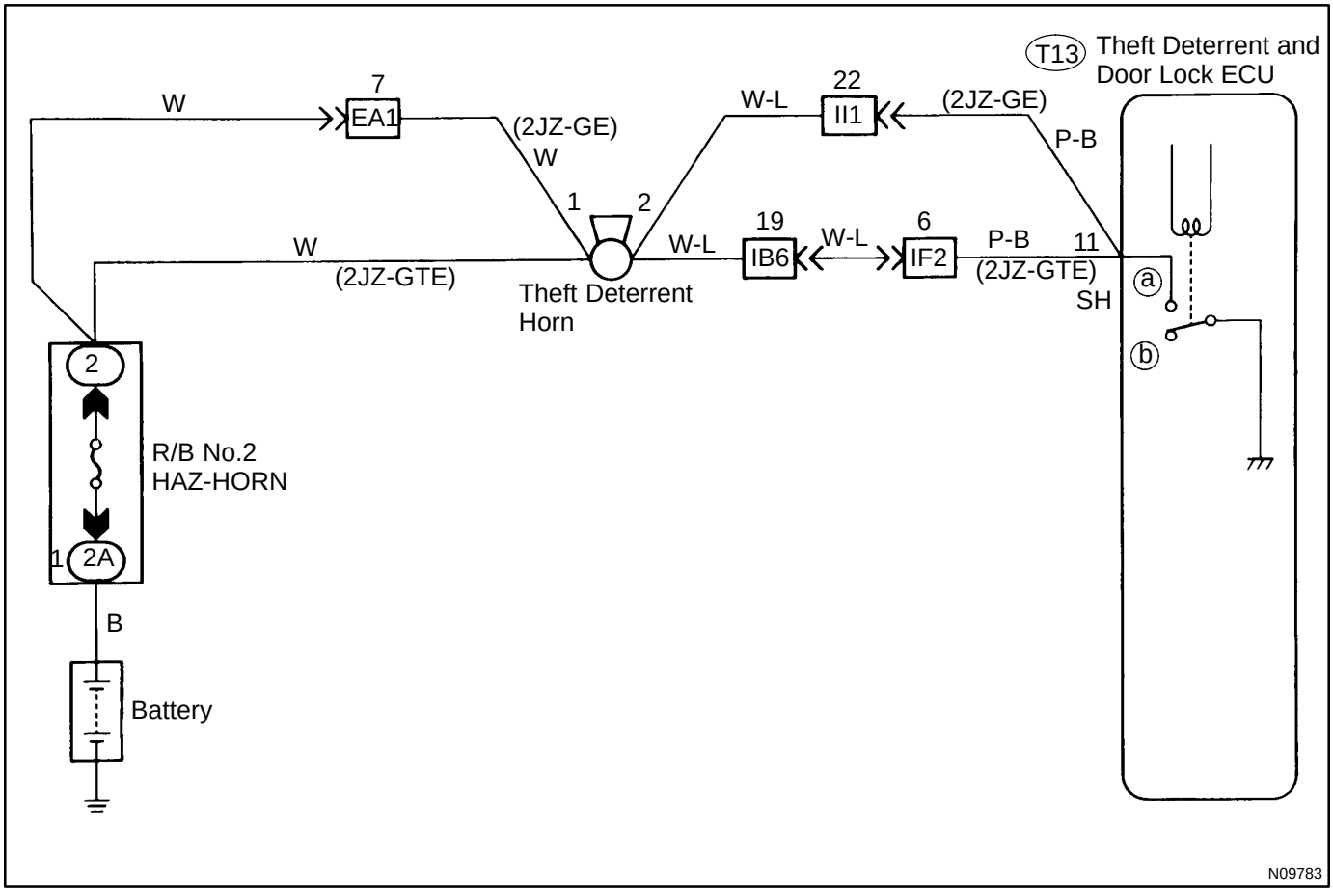

INSPECTION PROCEDURE

1	**Check voltage between terminal SH of theft deterrent horn connector and body ground.**

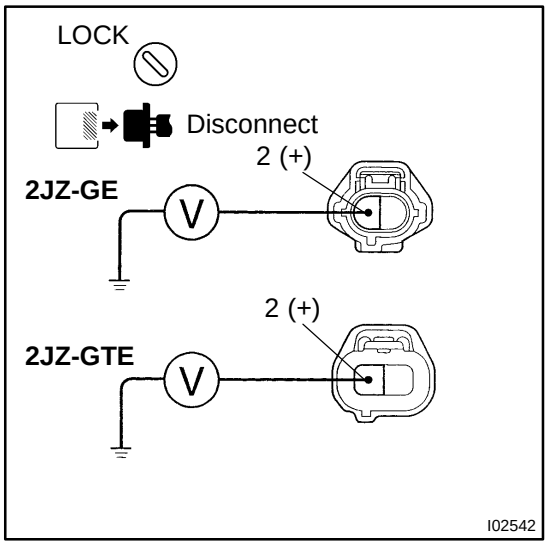

PREPARATION:
Remove the theft deterrent horn and disconnect the connector.
CHECK:
Measure voltage between terminal 1 of theft deterrent horn connector and body ground.
OK:
Voltage : 10 - 14 V

NG → **Check and repair harness and connector between HORN fuse and theft deterrent horn.**

OK

2	**Check theft deterrent horn.**

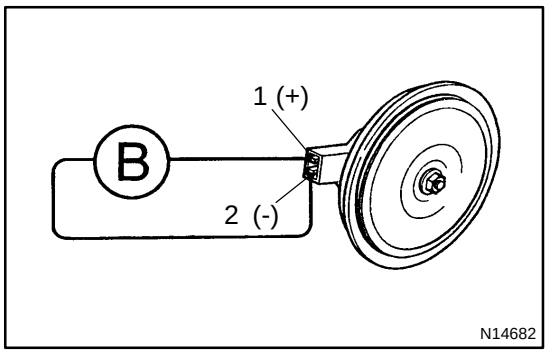

CHECK:
Connect positive ⊕ lead to terminal 1 and negative ⊖ lead to terminal 2 of theft deterrent horn connector.
OK:
Theft deterrent horn blows.

NG → **Replace theft deterrent horn.**

OK

3	**Check harness and connector between theft deterrent and door lock ECU and theft deterrent horn (See page IN-28).**

NG → **Check and repair harness or connector.**

OK

Check and replace theft deterrent ECU.

DI4X5-01

Headlight Control Relay Circuit

CIRCUIT DESCRIPTION

When the theft deterrent system is activated, it causes the Tr in the ECU to switch on and off at approximately 0.2 sec. intervals. This switches the headlight control relay on and off, thus flashing the headlights (See the wiring diagram below).

In this condition, if any of the following operations is done, the Tr in the ECU goes off and the headlight control relay switches off, thus stopping the headlights flashing:

(1) The front LH or RH door is unlocked with a key.
(2) The ignition switch is turned to the ACC or ON position.
(3) Approximately 1 minute elapses.

WIRING DIAGRAM

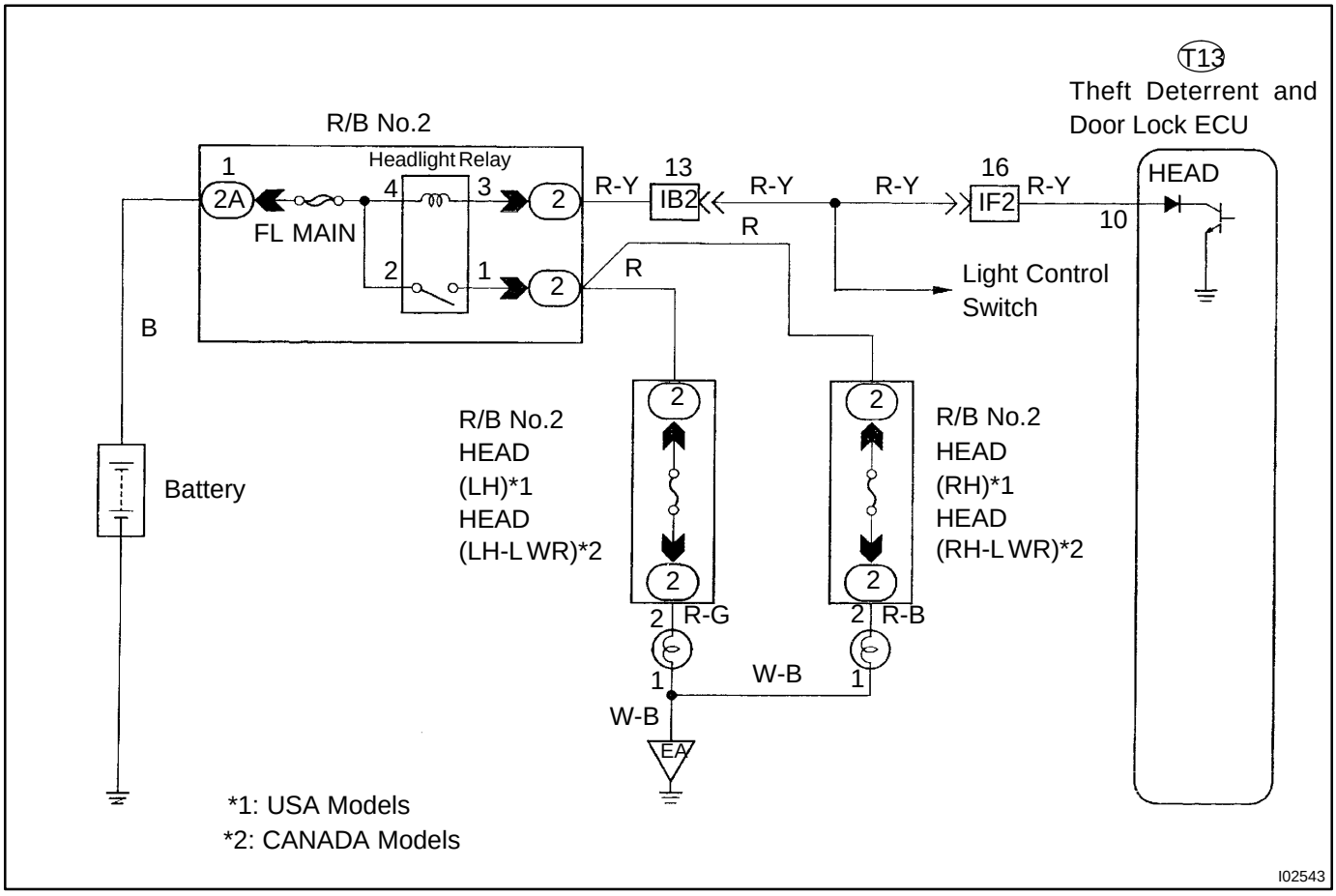

INSPECTION PROCEDURE

HINT:

The flow chart below is based on the premise that the headlights light up normally whenever the light control switch is operated. If headlight operation is not normal when the light control switch is operated, proceed to troubleshooting on page BE-2 .

1	**Check voltage between terminal HEAD of theft deterrent and door lock ECU connector and body ground.**

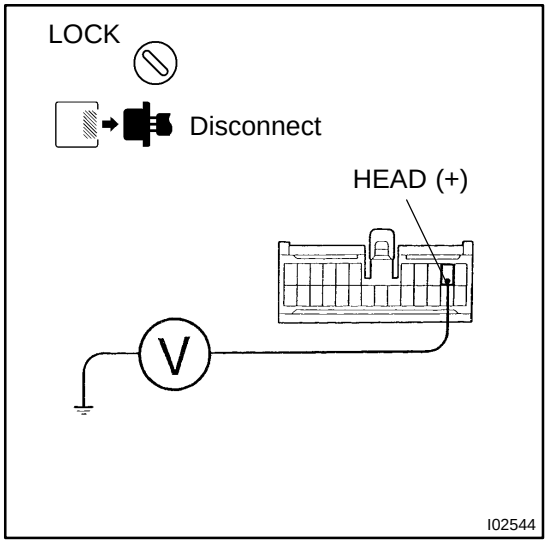

PREPARATION:

(a) Remove the instrument panel. (See page BO-50)

(b) Disconnect the ECU connector.

CHECK:

Measure voltage between terminal HEAD of theft deterrent ECU connector and body ground.

OK:

Voltage: 10 - 14 V

OK → **Check and replace theft deterrent and door lock ECU.**

NG

Check and repair harness and connector between theft deterrent and door lock ECU and headlight control relay (See page IN-28).

DI4X6-01

Taillight Control Relay Circuit

CIRCUIT DESCRIPTION

When the theft deterrent system is activated, it causes the Tr in the ECU to switch on and off at approximately 0.2 sec. intervals. This switches the taillight control relay on and off, thus the taillights flash (See the wiring diagram below).

In this condition, if any of the following operations is done, the Tr in the ECU goes off and the taillight control relay switches off, thus stopping the taillights flashing:

(1) The front LH or RH door is unlocked with a key.
(2) The ignition switch is turned to the ACC or ON position.
(3) Approximately 1 minute elapses.

WIRING DIAGRAM

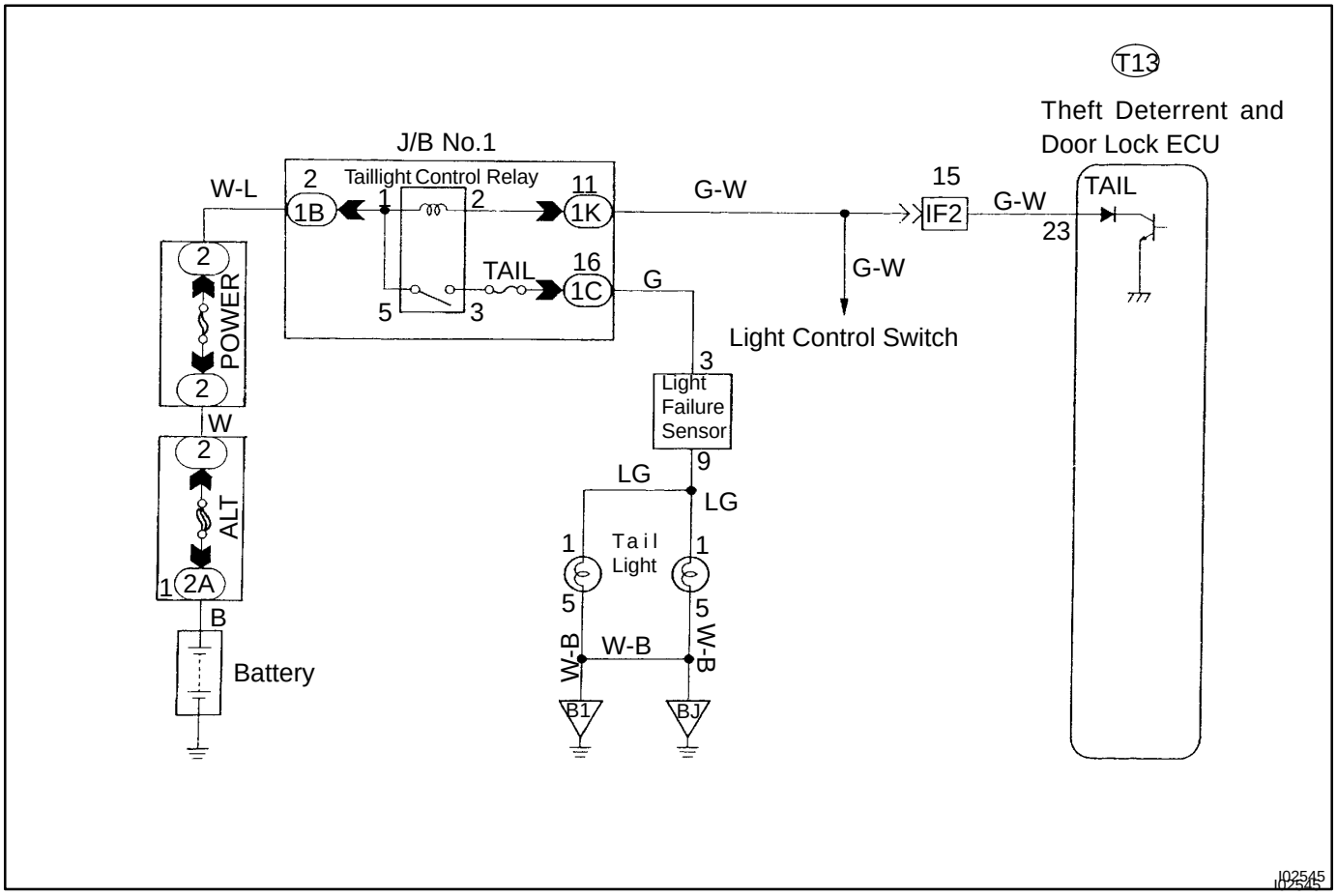

INSPECTION PROCEDURE

1	**Check voltage between terminal TAIL of theft deterrent door lock ECU connector and body ground.**

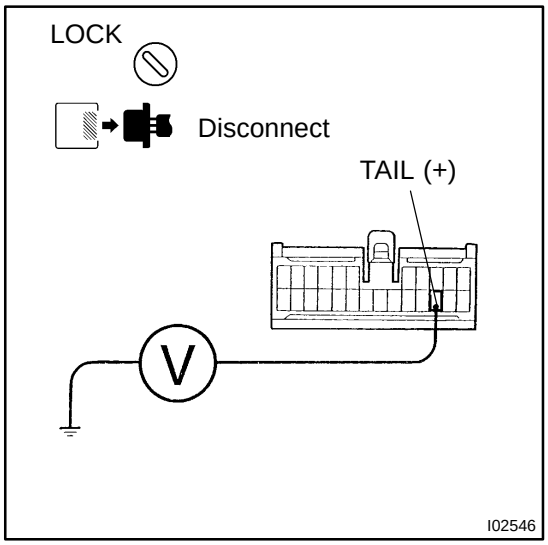

PREPARATION:

(a) Remove the instrument panel. (See page BO-50)

(b) Disconnect the ECU connector.

CHECK:

Measure voltage between terminal TAIL of theft deterrent and door lock ECU connector and body ground.

OK:

Voltage: 10 - 14 V

OK → **Check and replace theft deterrent ECU.**

NG

Check and repair harness and connector between theft deterrent and door lock ECU and taillight control relay (See page IN-28).

DI4X7-01

Ignition Switch Circuit

CIRCUIT DESCRIPTION

When the ignition switch is turned to the ACC position, battery positive voltage is applied to the terminal ACC of the ECU. Also, if the ignition switch is turned to the ON position, battery positive voltage is applied to the terminals ACC and IG of the ECU. When the battery positive voltage is applied to the terminal ACC of the ECU while the theft deterrent system is activated, the warning stops. Furthermore, power supplied from the terminals ACC and IG of the ECU is used as power for the door courtesy switch, and position switch, etc.

WIRING DIAGRAM

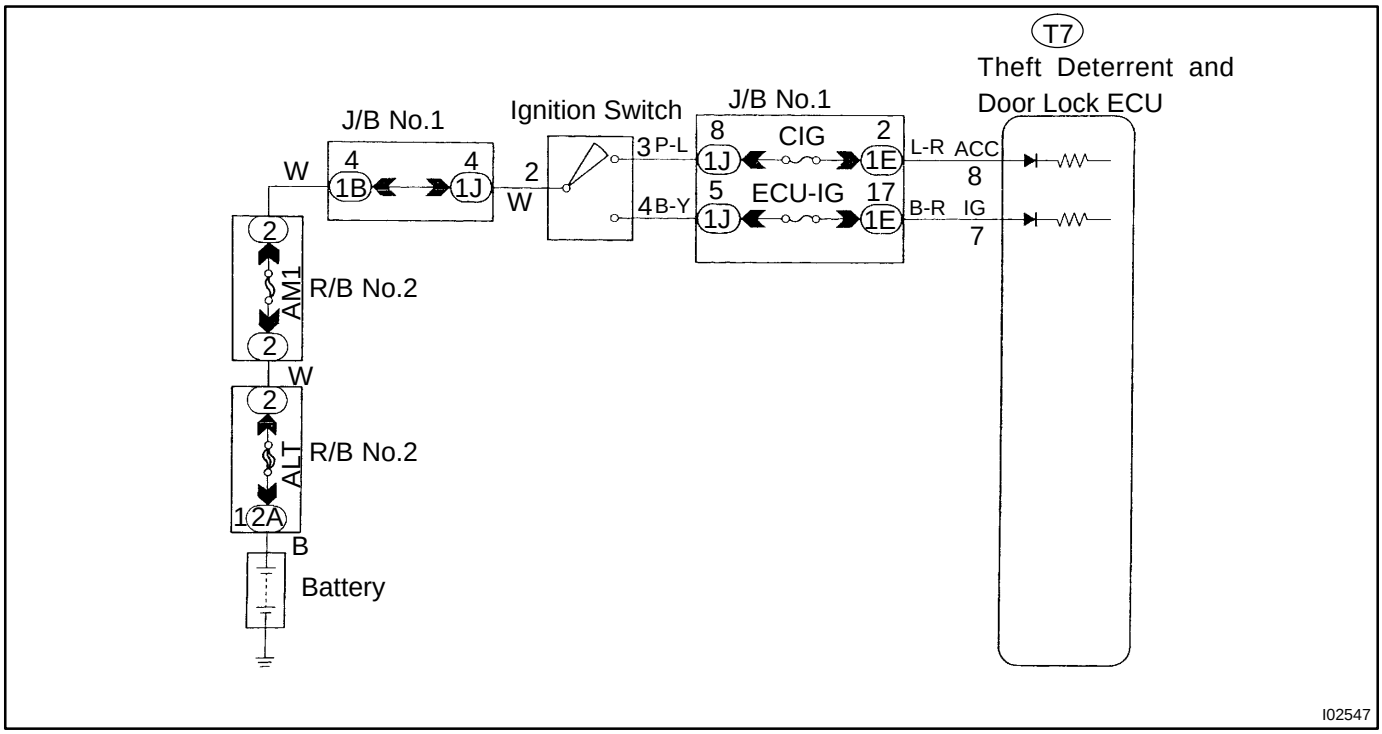

INSPECTION PROCEDURE

1	**Check CIG and ECU-IG fuses.**

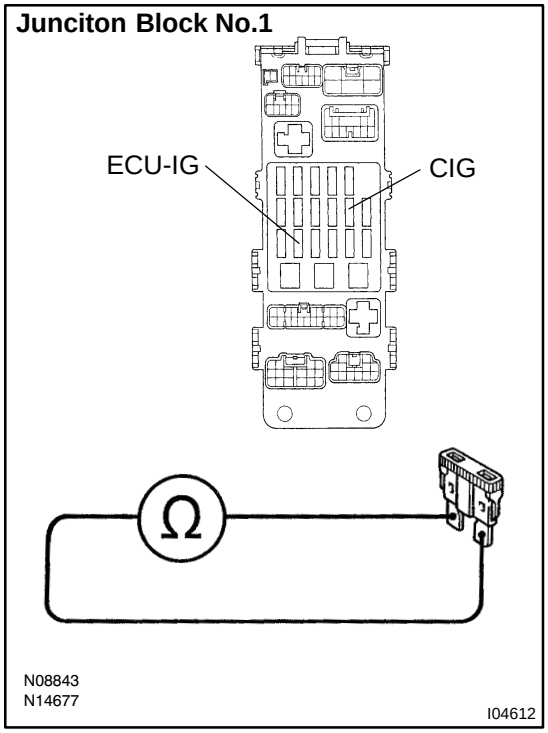

PREPARATION:

Remove CIG and ECU-IG fuses from J/B No.1.

CHECK:

Check continuity of CIG and ECU-IG fuses.

OK:

Continuity

NG → **Check for short in all the harness and components connected to the CIG and ECU-IG fuses (See attached wiring diagram).**

OK

2	**Check voltage between terminals IG and ACC of theft deterrent and door lock ECU and body ground.**

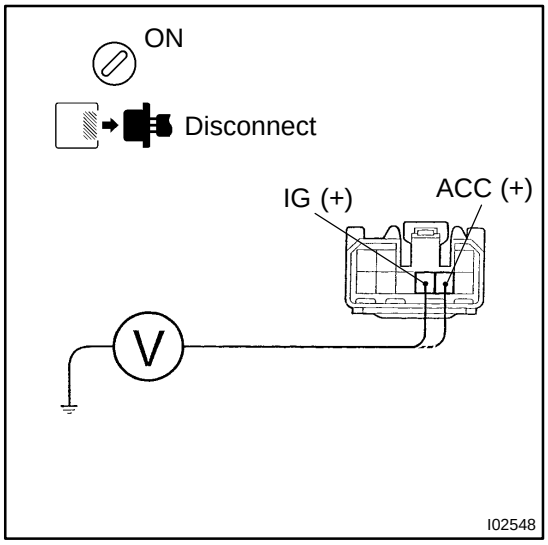

PREPARATION:

(a) Remove the instrument panel. (See page BO-50)
(b) Disconnect the ECU connector.
(c) Turn the ignition switch ON.

CHECK:

Measure voltage between terminals IG and ACC of theft deterrent ECU connector and body ground.

OK:

Voltage: 10 - 14 V

OK → **Check and replace theft deterrent and door lock ECU.**

NG

Check and repair harness and connector between theft deterrent and door lock ECU and battery (See page IN-28).

DI4X9-01

Luggage Compartment Door Courtesy Switch Circuit

CIRCUIT DESCRIPTION

The luggage compartment door courtesy switch goes on when the back door is opened and goes off when the back door is closed.

WIRING DIAGRAM

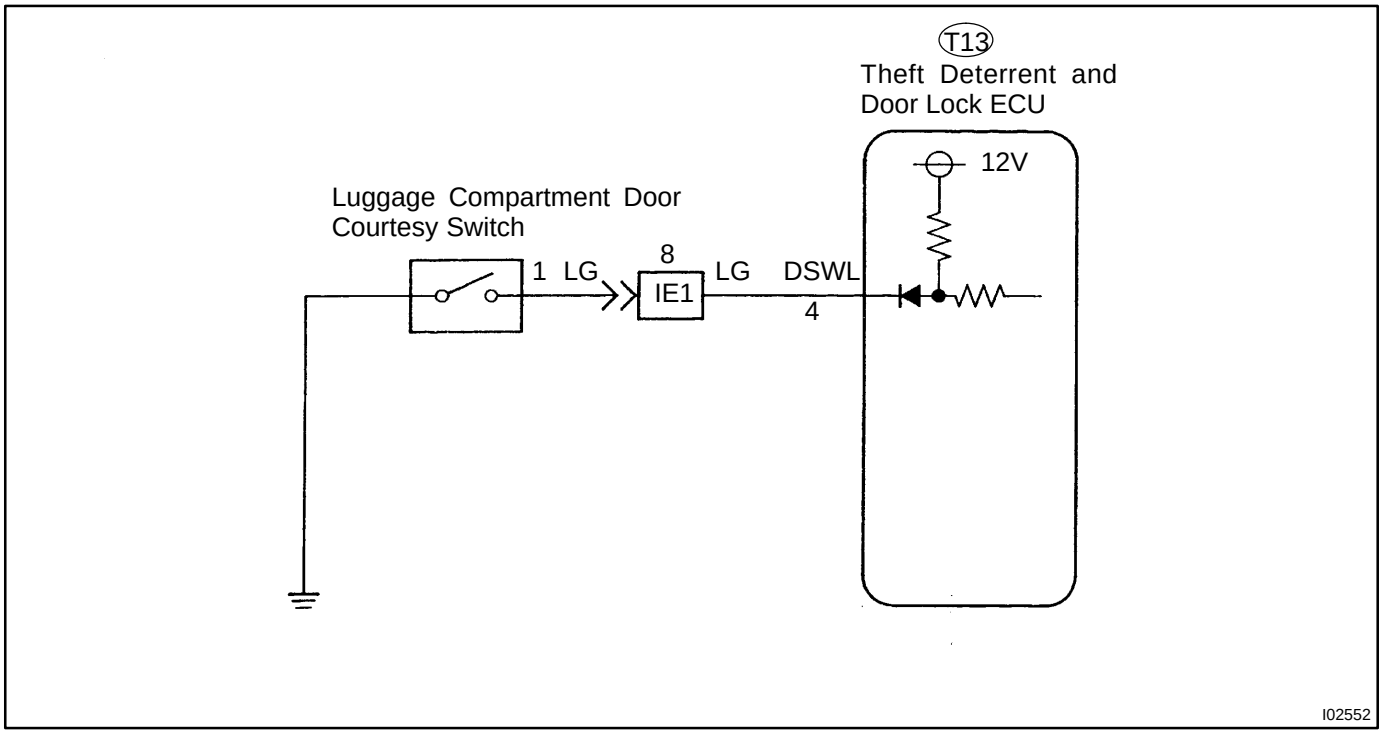

INSPECTION PROCEDURE

1	**Check operation of luggage room light.**

CHECK:

Check that luggage room light goes off when luggage room light switch is pushed, and comes on when switch is not pushed.

NG → **Check and repair luggage compartment door courtesy light circuit (See page DI-636).**

OK

2	**Check for open in harness and connector between theft deterrent and door lock ECU and luggage compartment door courtesy switch (See page IN-28).**

NG → **Repair or replace harness or connectors.**

OK

Check and replace theft deterrent ECU. *1

*1: When there is a malfunction that the theft deterrent system cannot be set, proceed to the next numbered circuit inspection shown on matrix chart (See page DI-615).

DI4XA-01

Door Unlock Detection Switch Circuit

CIRCUIT DESCRIPTION

The door unlock detection switch goes off when the door lock knob is operated to the lock position, and comes on when the door lock knob is operated to the unlock position.

WIRING DIAGRAM

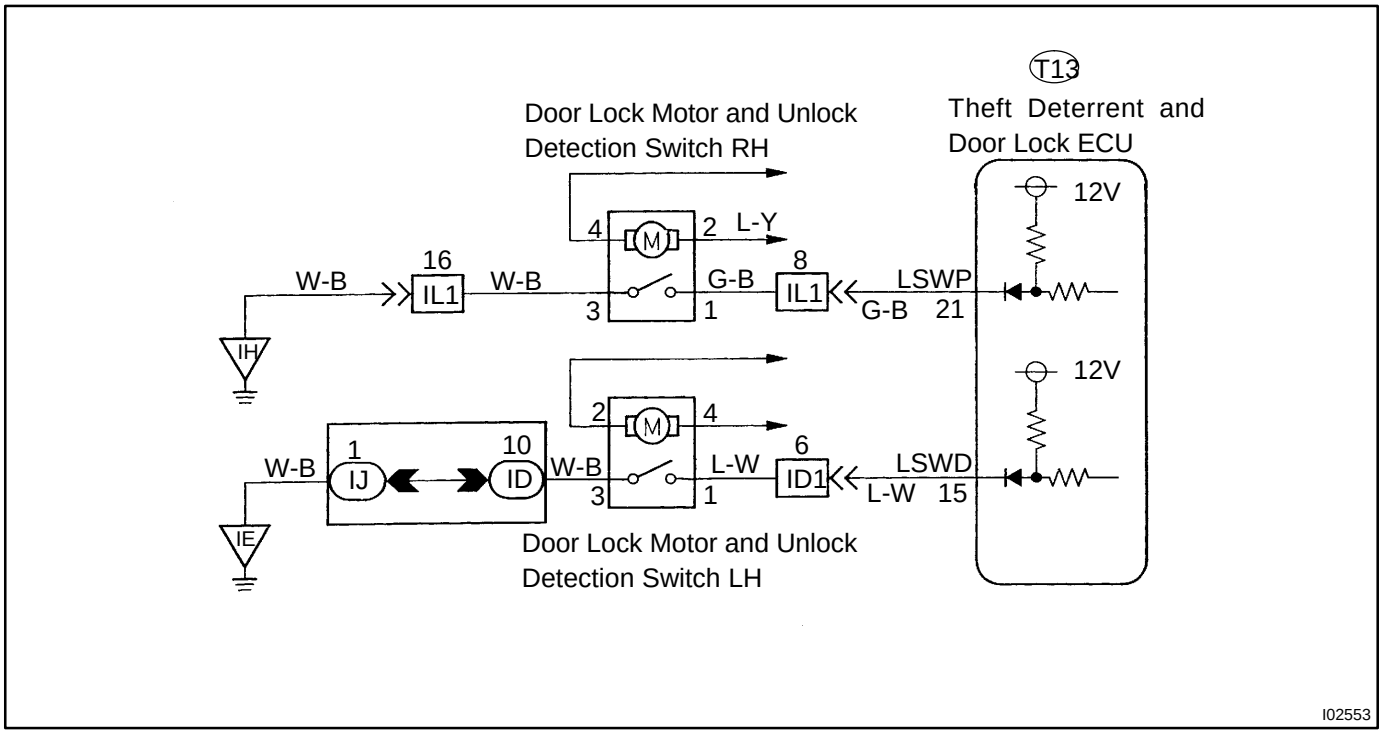

I02553

INSPECTION PROCEDURE

1	Check door unlock detection switch.

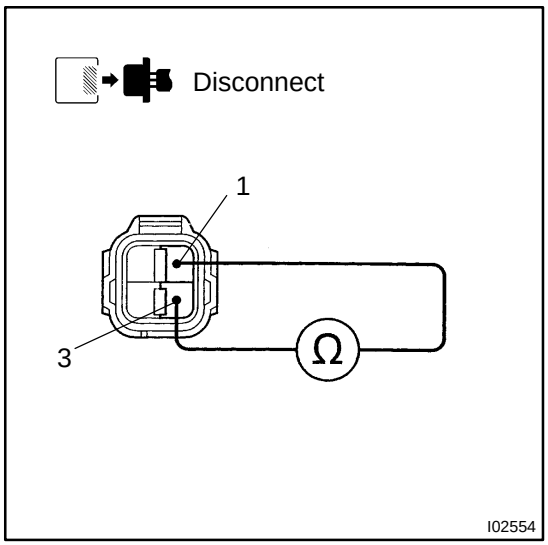

PREPARATION:

(a) Remove the door trim.

(b) Disconnect door lock motor and door unlock detection switch connector.

CHECK:

Check continuity between terminals 1 and 3 of door unlock detection switch connector, when door lock knob is operated to the lock side and to the unlock side.

OK:

Switch condition	Terminal No. to continuity
Door unlock	1 - 3
Door lock	-

NG → **Replace door unlock detection switch.**

OK ↓

2	Check harness and connector between theft deterrent and door lock ECU and door unlock detection switch, door unlock detection switch and body ground (See page IN-28).

NG → **Repair or replace harness or connector.**

OK ↓

Check and replace theft deterrent and door lock ECU. *1

*1: When there is a malfunction that the theft deterrent system cannot be set, proceed to the next numbered circuit inspection shown on matrix chart (See page DI-615).

DI4XB-01

Door Courtesy Switch Circuit

CIRCUIT DESCRIPTION

The door courtesy switch goes on when the door is opened and goes off when the door is closed.

WIRING DIAGRAM

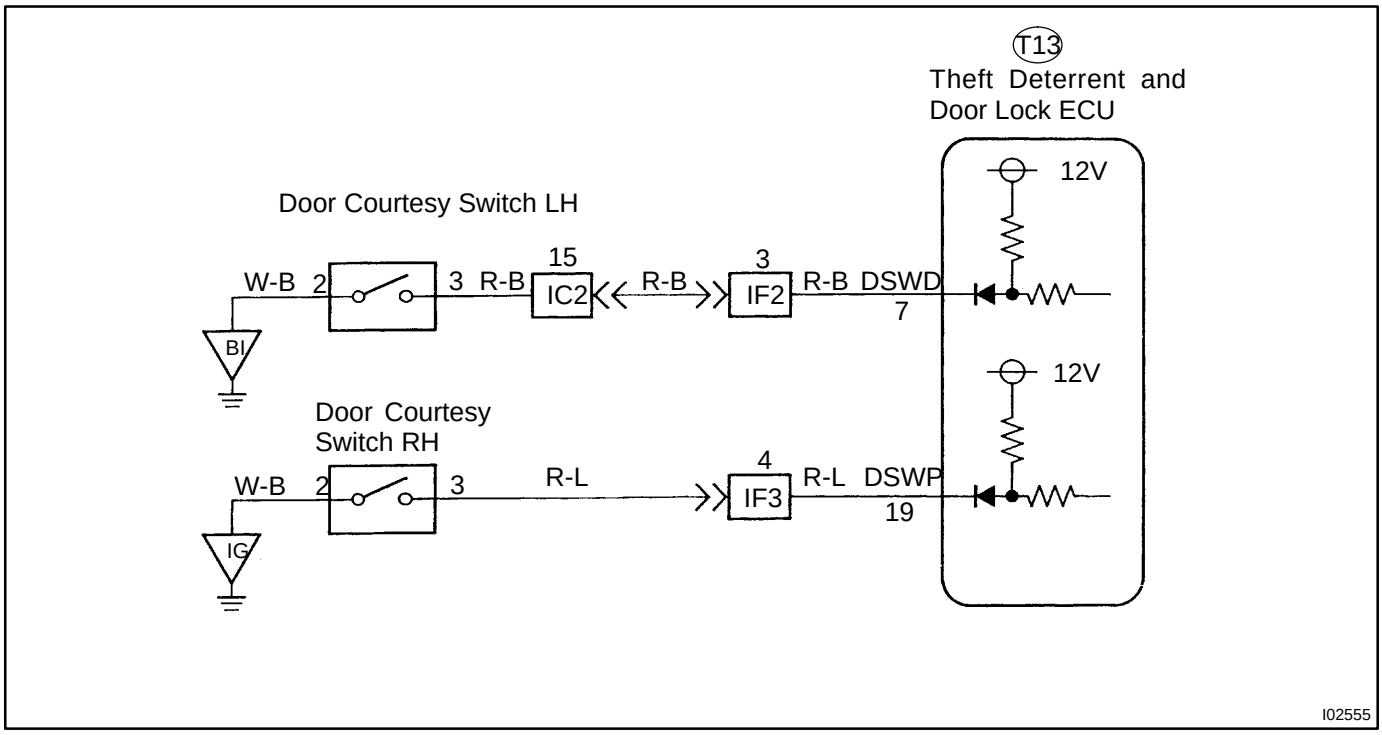

INSPECTION PROCEDURE

1	**Check operation of open door warning light.**

CHECK:

Check that open door warning light comes on when each door is opened, and goes off when all doors are closed.

NG → **Check and repair open door warning light circuit.**

OK ↓

2	**Check for open in harness and connector between theft deterrent and door lock ECU and door courtesy switch (See page IN-28).**

OK → **Check and replace theft deterrent ECU. *1**

NG ↓

Repair or replace harness or connector.

*1: When there is a malfunction that the theft deterrent system cannot be set, proceed to the next numbered circuit inspection shown on matrix chart (See page DI-615).

DI4XC-01

Engine Hood Courtesy Switch Circuit

CIRCUIT DESCRIPTION

The engine hood courtesy switch is built into the engine hood lock assembly and goes on when the engine hood is opened and goes off when the engine hood is closed.

WIRING DIAGRAM

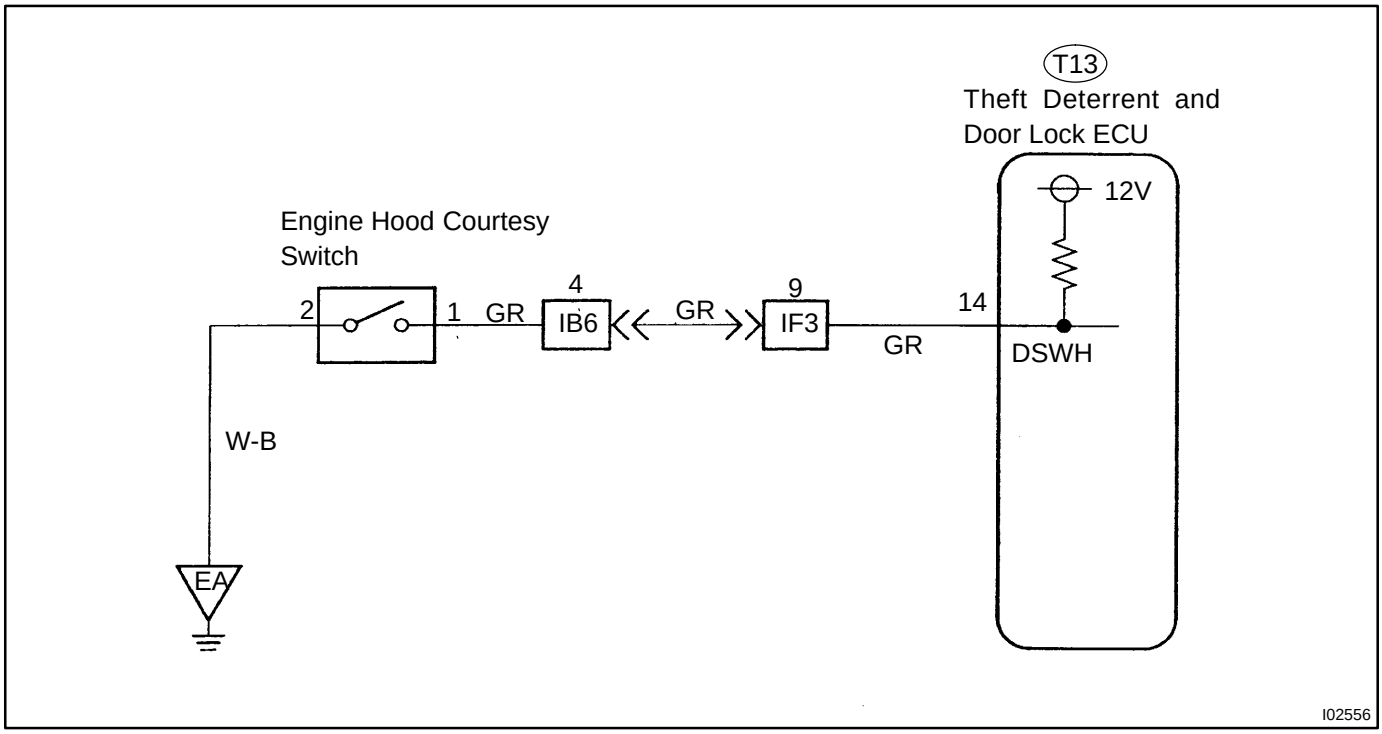

INSPECTION PROCEDURE

1	**Check engine hood courtesy switch.**

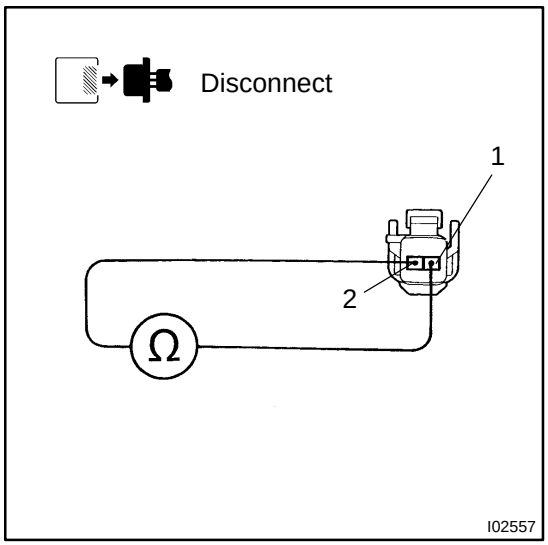

PREPARATION:

(a) Remove engine hood lock assembly.

(b) Disconnect engine hood courtesy switch connector.

CHECK:

Check continuity between terminals 1 and 2 when engine hood lock is locked and unlocked.

OK:

Engine hood lock	Terminal No. to continuity
Lock	-
Unlock	1 - 2

NG → **Replace engine hood courtesy switch.**

OK

2	**Check harness and connector between theft deterrent and door lock ECU and switch, switch and body ground (See page IN-28).**

NG → **Repair or replace harness or connector.**

OK

Check and replace theft deterrent and door lock ECU (See page IN-28).

DI4X8-01

Luggage Compartment Door Key Lock and Unlock Switch Circuit

CIRCUIT DESCRIPTION

The luggage compartment door key lock and unlock switch goes on when the back door key cylinder is turned to the unlock side with the key.

WIRING DIAGRAM

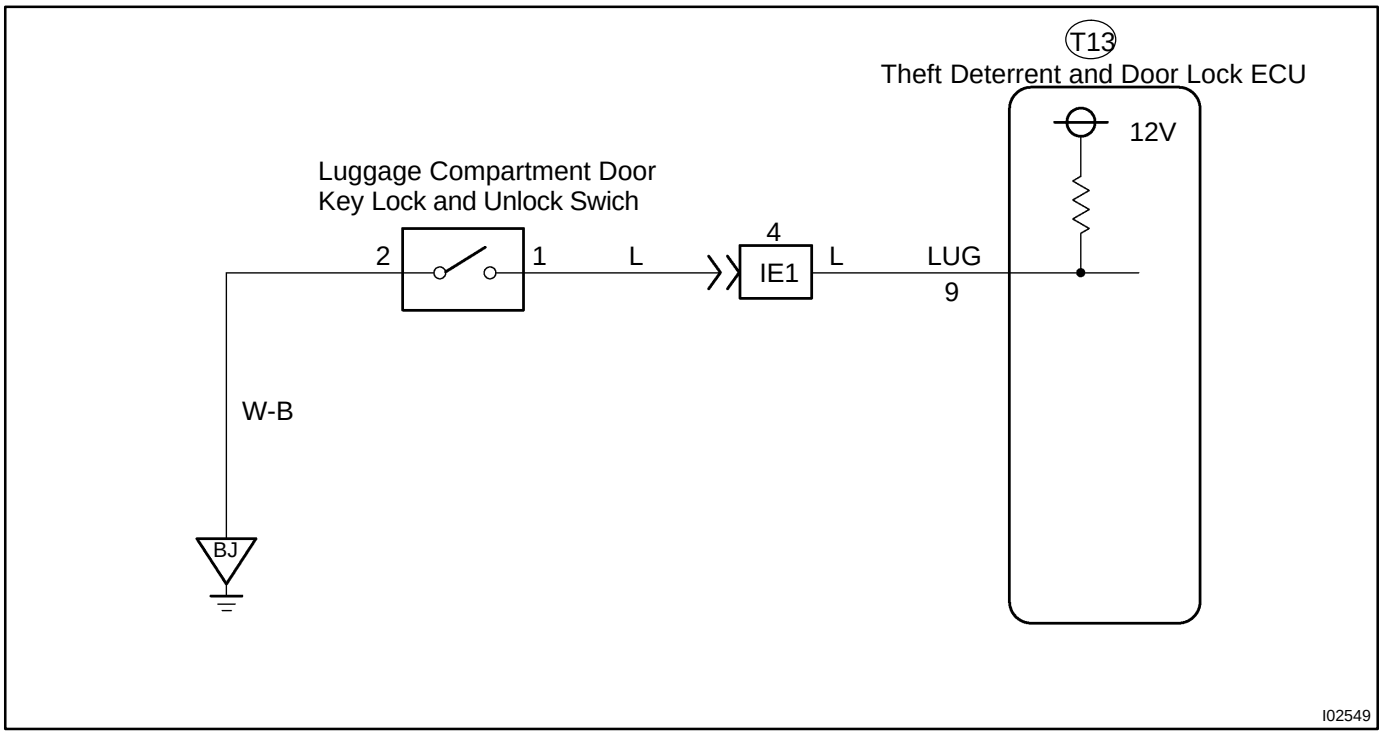

INSPECTION PROCEDURE

1	**Check voltage between terminal 1 of luggage compartment door key lock and unlock switch connector and body ground.**

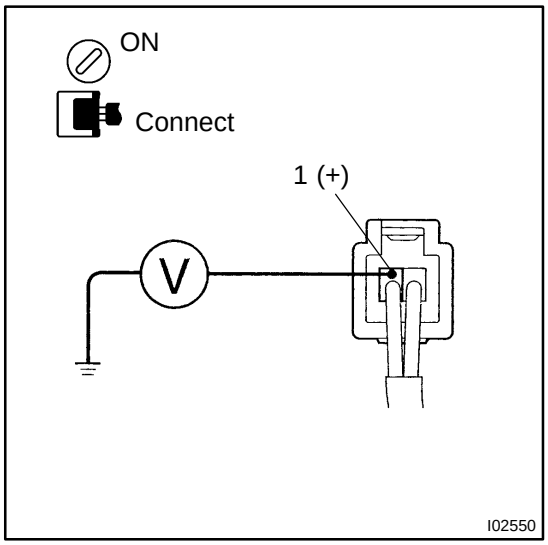

PREPARATION:

(a) Remove deck trim rear cover.

(b) Turn the ignition switch ON.

CHECK:

Measure voltage between terminal 1 of luggage compartment door key lock and unlock switch connector and body ground, when the key is turned to the unlock side and not turned.

OK:

Key operation	Voltage
Turned to the unlock side	0 V
Not turned	Battery positive voltage

OK → **Check and replace theft deterrent and door lock ECU. *1**

NG

2	**Check luggage compartment door key lock and unlock switch.**

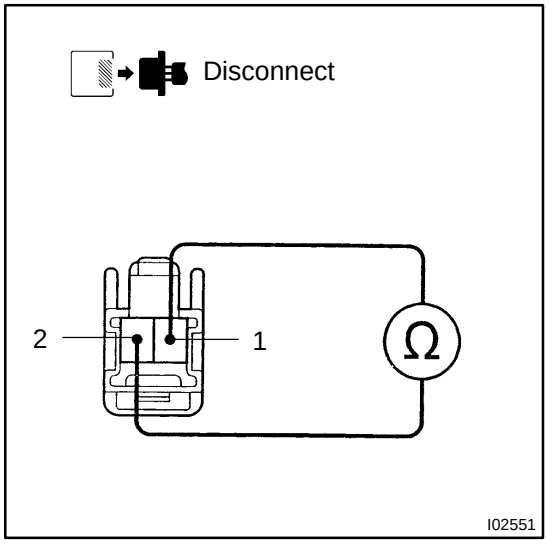

PREPARATION:

Disconnect luggage compartment door key lock and unlock switch connector.

CHECK:

Check continuity between terminals 1 and 2, when the key is turned to the unlock side and not turned.

OK:

Key position	Terminal No. to continuity
Turned to unlock side	1 - 2
Not turned	-

NG → **Repair or replace luggage compartment door key lock and unlock switch.**

OK

3	**Check harness and connector between theft deterrent and door lock ECU and key unlock switch, key unlock switch and body ground (See page IN-28).**

NG → **Repair or replace harness or connector.**

OK

Check and replace theft deterrent and door lock ECU.

*1: When there is a malfunction that the theft deterrent system cannot be set, proceed to the next numbered circuit inspection shown on matrix chart (See page DI-615).

DI4XD-01

ECU Power Source-Circuit

CIRCUIT DESCRIPTION

This circuit provides power to operate the theft deterrent and door lock ECU.

WIRING DIAGRAM

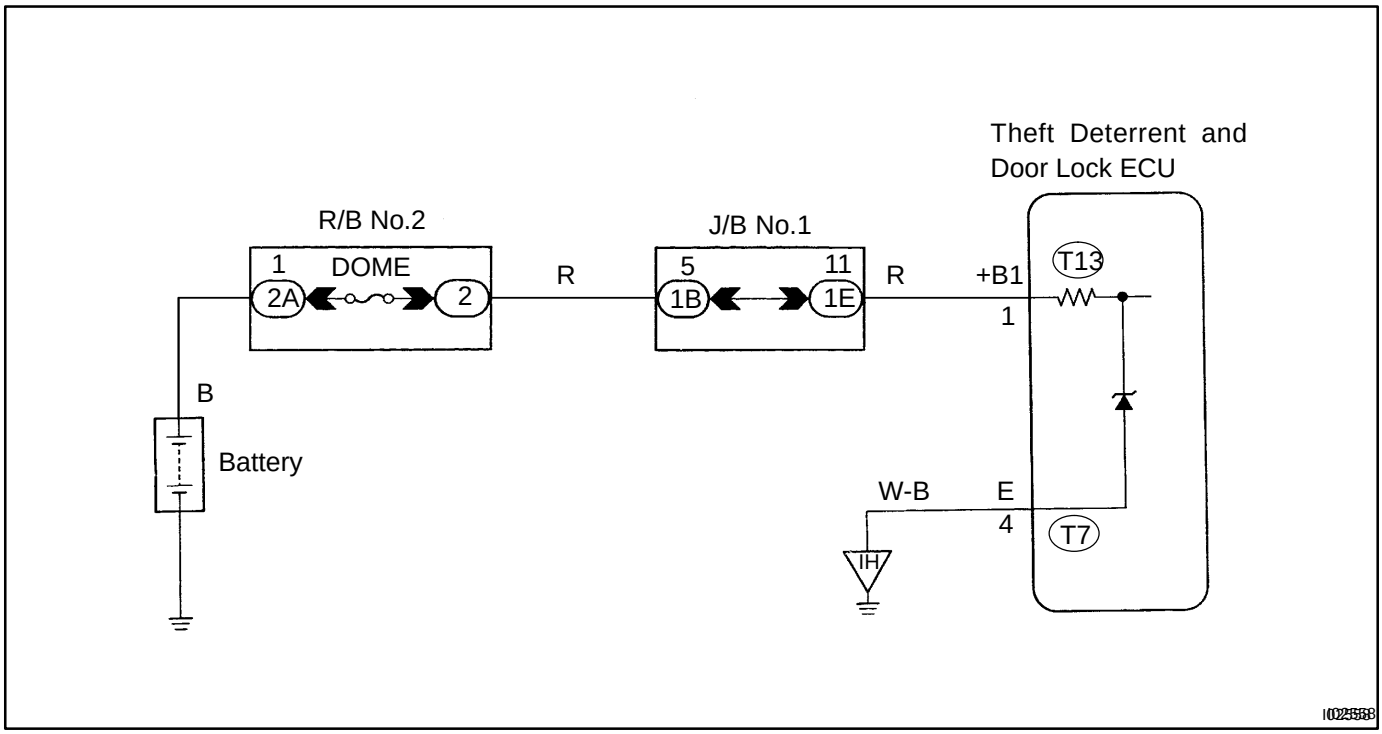

INSPECTION PROCEDURE

1	**Check DOME fuse.**

Relay Block No.2

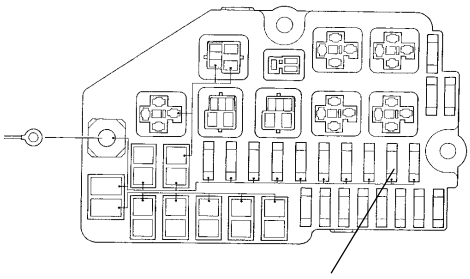

N09001

PREPARATION:
Remove DOME fuse from R/B No.2.
CHECK:
Check continuity of DOME fuse.
OK:

Continuity

NG → **Check for short in all the harness and components connected to the DOME fuse (See attached wiring diagram).**

OK

2	Check voltage between terminals +B1 and E of ECU connector.

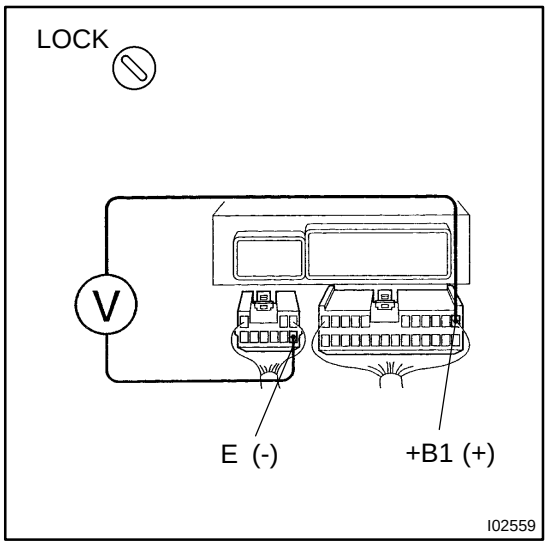

PREPARATION:

(a) Remove the No.1 under cover and heater duct.

(b) Disconnect the theft deterrent and door lock ECU connectors.

CHECK:

Measure voltage between terminals +B1 and E of ECU connector.

OK:

Voltage: 10 - 14 V

OK	Proceed to next circuit inspection shown on matrix chart (See page DI-615).

NG

3	Check for open in harness and connector between ECU and body ground (See page IN-28).

NG	Repair or replace harness or connector.

OK

Check and repair harness and connector between ECU and battery (See page IN-28).

DI4XE-01

Actuator Power Source Circuit

CIRCUIT DESCRIPTION

This circuit provides power to drive the door lock motor.

WIRING DIAGRAM

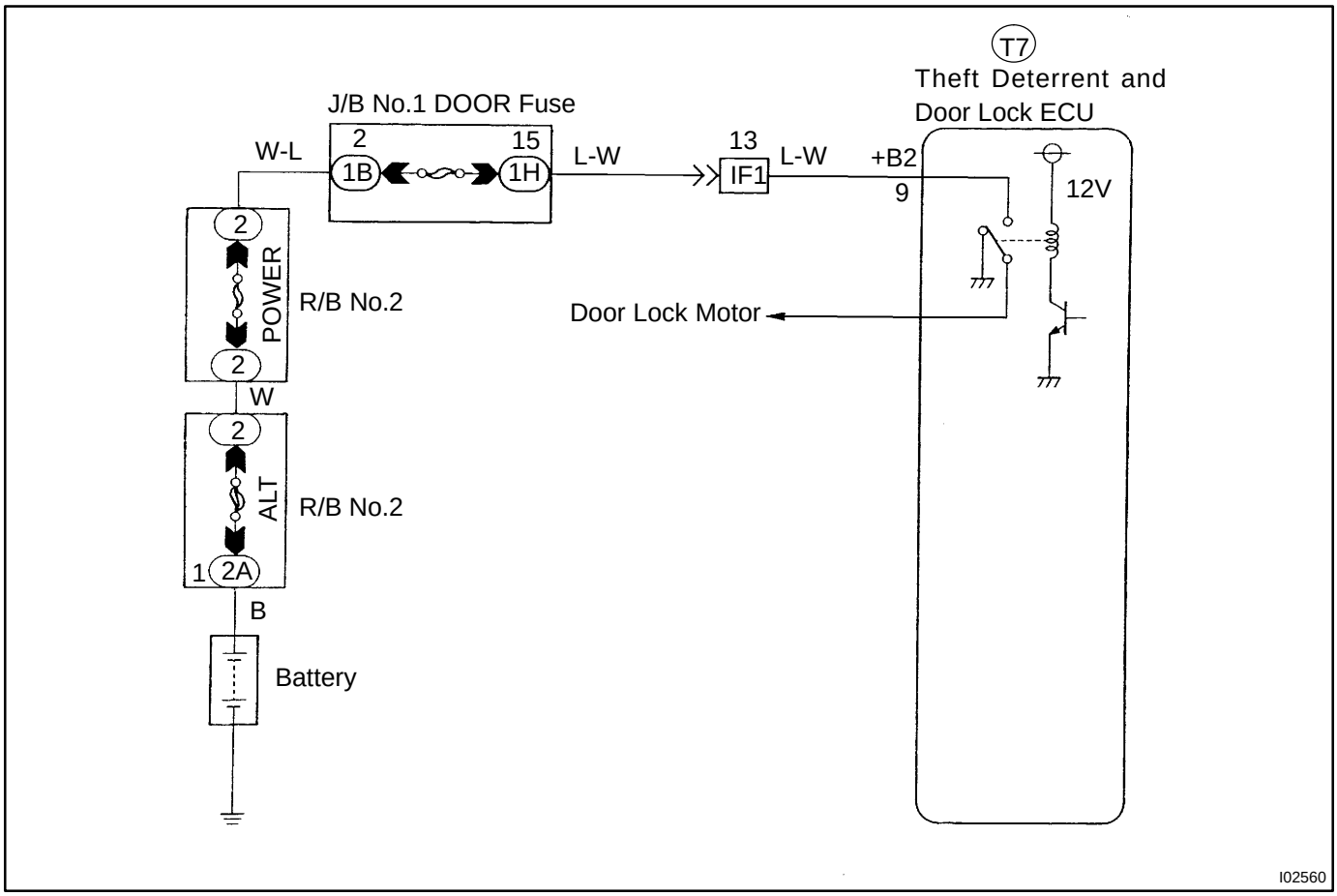

INSPECTION PROCEDURE

1	**Check POWER M-fuse.**

Relay Block No.2

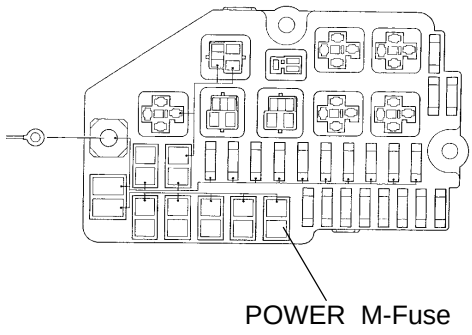

PREPARATION:
Remove POWER M fuse from R/B No.2.
CHECK:
Check continuity of POWER M-fuse.
OK:
Continuity

NG → **Check for short in all the harness and components connected to the DOOR fusible link (See attached wiring diagram). *1**

OK

2	Check voltage between terminal +B2 of ECU connector and body ground.

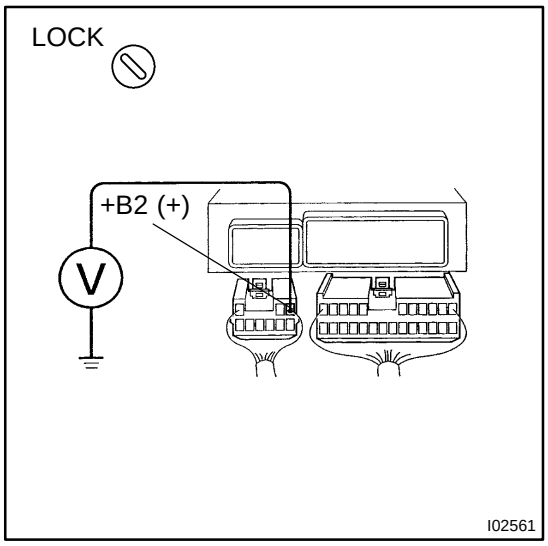

PREPARATION:

(a) Remove the instrument panel. (See page BO-50)

(b) Disconnect the ECU connector.

CHECK:

Measure voltage between terminal +B2 of ECU connector and body ground.

OK:

Voltage: 10 - 14 V

OK → **Proceed to next circuit inspection shown on matrix chart (See page DI-615).**

NG

Check and repair harness and connector between ECU and battery (See page IN-28).

*1: The power source is supplied to the actuator (door lock motor, through the theft deterrent and door lock ECU. Accordingly, if a short circuit of the W/H or actuator occurs in the actuator circuit the POWER M-Fuse may become OPEN, so also inspect the actuator (door lock motor circuit on page DI-647).

DI4XF-01

Door Lock Motor Circuit

CIRCUIT DESCRIPTION

This door lock motor locks and unlocks the door according to signals from the ECU.

WIRING DIAGRAM

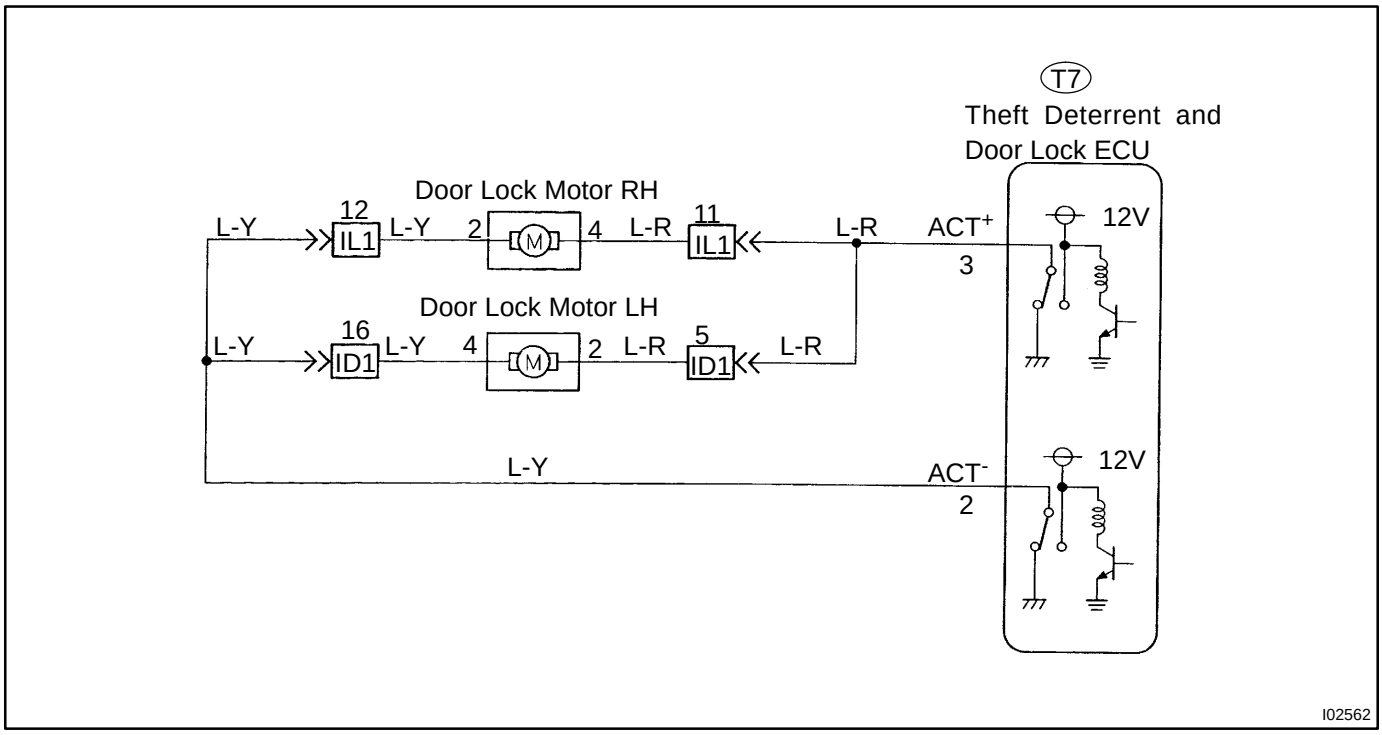

INSPECTION PROCEDURE

1	**Check operating sound of door lock motor.**

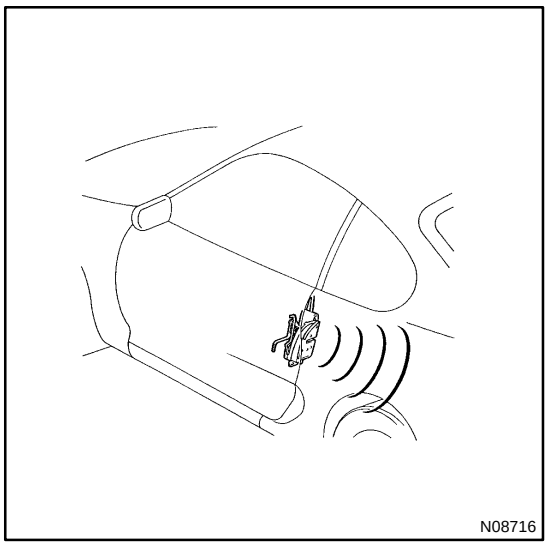

CHECK:

Check operating sound of door lock motor, when door lock control switch is pushed to the lock side and unlock side.

OK:

Can hear operating sound of door lock motor.

HINT:

Inspect the door which is malfunctioning.

OK → **Repair or replace door lock control link.**

NG

2	Check door lock motor.

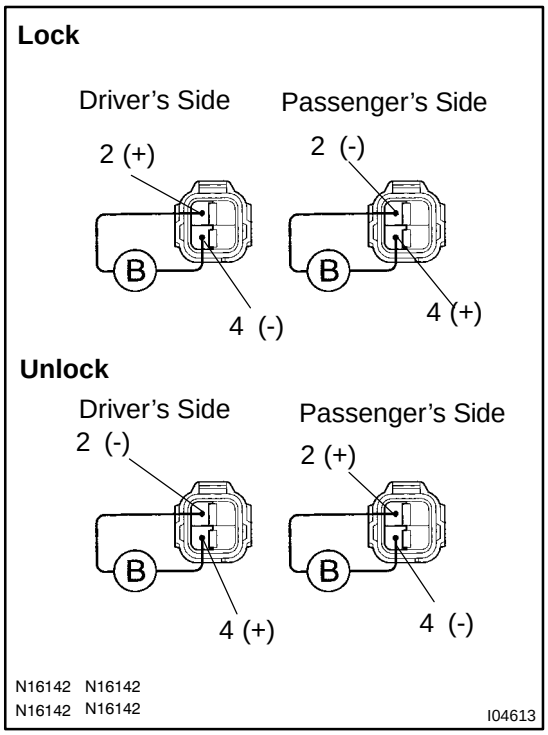

PREPARATION:

(a) Remove the door trim and service hole cover.

(b) Disconnect the door lock motor connector.

CHECK:

(a) Connect positive ⊕ lead to terminal 2 (4) and negative ⊖ lead to terminal 4 (2) of door lock motor connector.

(b) Connect positive ⊕ lead to terminal 4 (2) and negative ⊖ lead to terminal 2 (4) of door lock motor connector.

( ): Passenger's Side.

OK:

(1) Door lock motor locks door.

(2) Door lock motor unlocks door.

HINT:

This inspection must be carried out within 2 seconds.

OK	Replace door lock motor.

NG

3	Check harness and connectors between ECU and door lock motor (See page IN-28).

NG	Repair or replace harness or connector.

OK

Proceed to next circuit inspection shown on matrix chart (See page DI-615).

DI4XG-01

Door Lock Control Switch Circuit

CIRCUIT DESCRIPTION

When the door lock control switch is pushed to the lock side, Lock terminal of the switch is grounded, and when the switch is pushed to the unlock side, unlock terminal is grounded (See wiring diagram below).

WIRING DIAGRAM

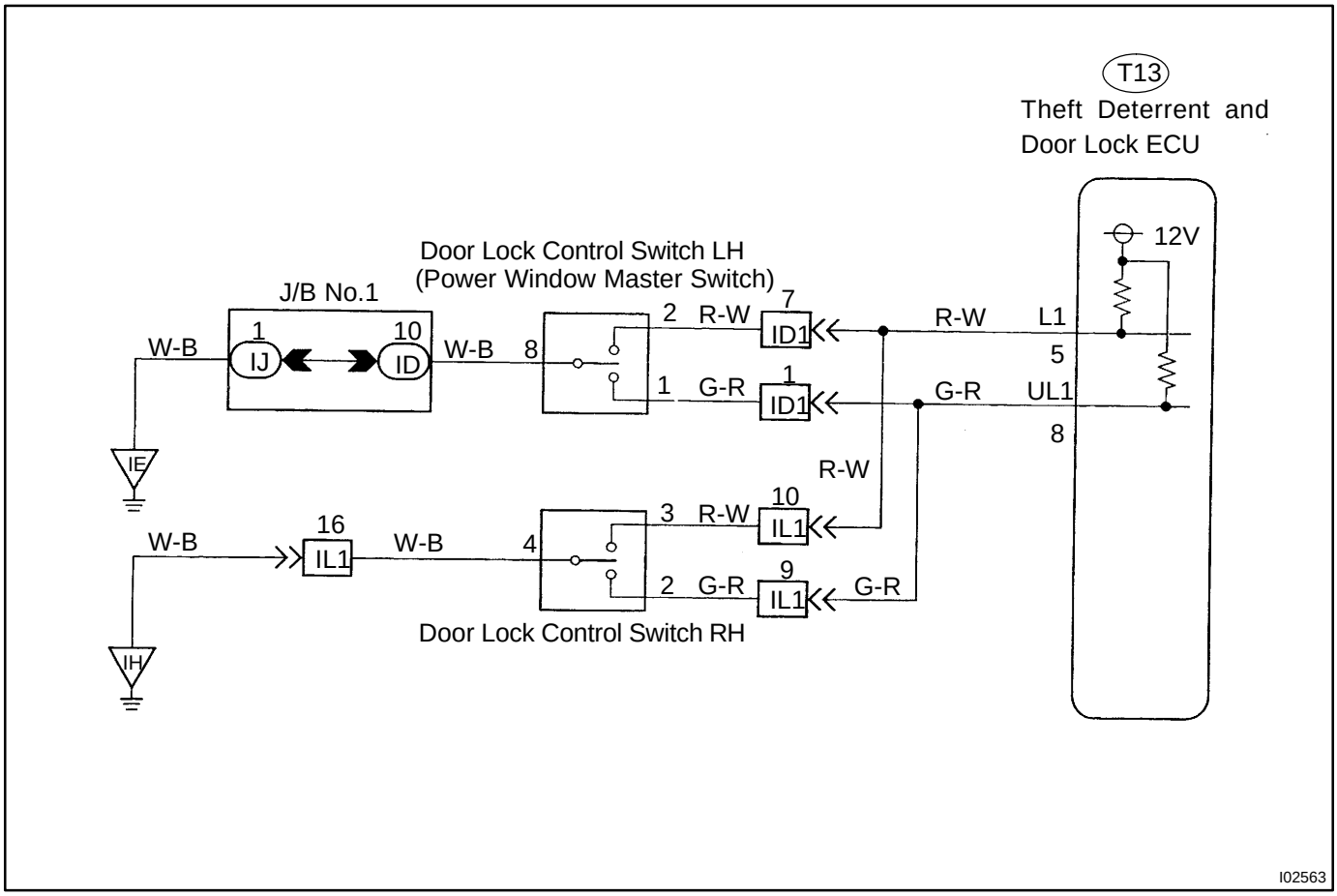

INSPECTION PROCEDURE

1	**Check voltage between terminals 2(3), 1(1) of door lock control switch connector and body ground.**

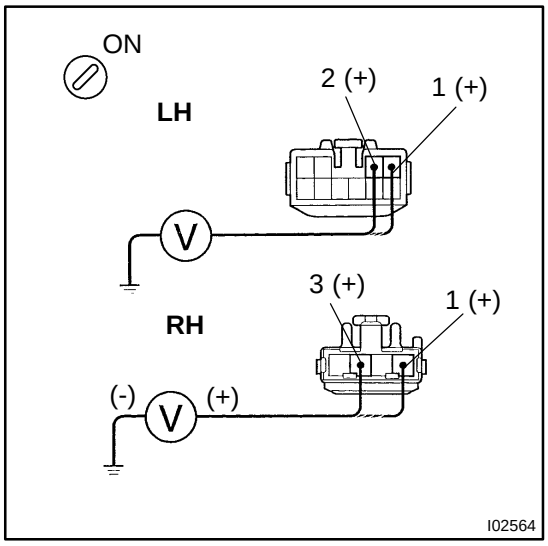

PREPARATION:

Remove the door trim.

CHECK:

(a) Turn the ignition switch ON.

(b) Measure voltage between terminals 2(3), 1(1) of door lock control switch connector and body ground, when door lock control switch is pressed to the lock side, unlock side and OFF position.

OK:

Switch position	Terminal 2(3)	Terminal 1(1)
Lock side	Below 1 V	8 - 10 V
Unlock side	8 - 10 V	Below 1 V
OFF	8 - 10 V	8 - 10 V

HINT:

The terminal number without brackets is for the LH, the number with brackets is for the RH.

OK → **Proceed to next circuit inspection shown on matrix chart (See page DI-615).**

NG

2	Check door lock control switch.

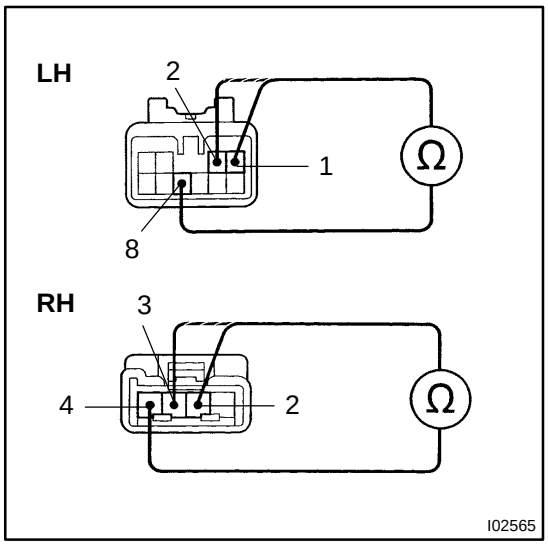

PREPARATION:

Disconnect the door lock control switch connector.

CHECK:

Check continuity between terminals 2(3), 1(2), 8(4) of door lock control switch connector, when door lock control switch is pressed to the lock side, and unlock side and OFF position.

OK:

Switch position	Terminal No. to continuity
Lock side	2(3) - 8(4)
Unlock side	1(2) - 8(4)
OFF	

HINT:

The terminal number without brackets is for the LH, the number with brackets is for the RH.

NG → **Replace door lock control switch.**

OK ↓

3	Check harness and connectors between ECU and door lock control switch, switch and body ground (See page IN-28).

NG → **Repair or replace harness or connector.**

OK ↓

Check and replace ECU. *1

*1: Malfunction of the ECU can be considered possible only when the problem symptom as follows:

- Lock and/or unlock using the Door Lock Control Switch cannot be done, neither on the driver's side nor on the passenger's side.

DI4XH-01

Door Key Lock and Unlock Switch Circuit

CIRCUIT DESCRIPTION

The door key lock and unlock switch is built in the door key cylinder.
When the key is turned to the lock side, terminal 3 of the switch is grounded and when the key is turned to the unlock side, terminal 1 of the switch is grounded.

WIRING DIAGRAM

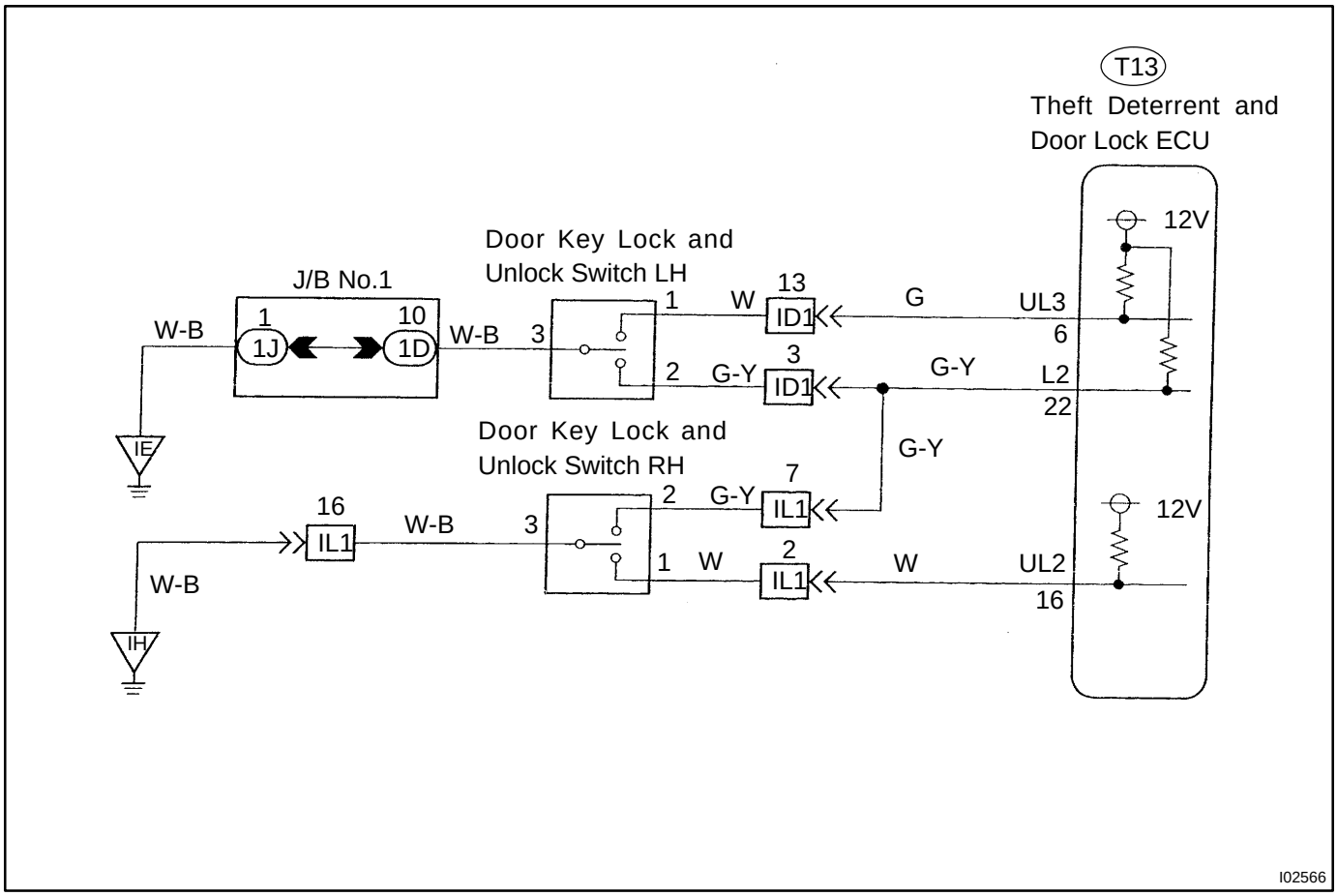

INSPECTION PROCEDURE

1	Check door key lock and unlock switch.

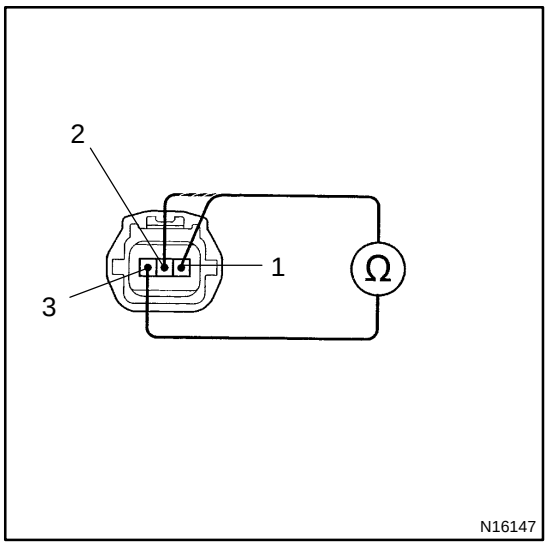

PREPARATION:

(a) Remove the door trim and service hole cover.

(b) Disconnect the door key lock and unlock switch connector.

CHECK:

Check continuity between terminals 1, 2 and 3 of door key lock and unlock switch connector, when door key lock and unlock switch is turned to the lock side, unlock side and when it is not turned.

OK:

Switch position	Terminal No. to continuity
Lock side	2 - 3
Unlock side	1 - 3
OFF	-

NG → **Replace door key lock and unlock switch.**

OK ↓

2	Check harness and connectors between ECU and switch, switch and body ground (See page IN-28).

NG → **Repair or replace harness or connector.**

OK ↓

Proceed to next circuit inspection shown on matrix chart (See page DI-615).

DI4XI-01

Key Unlock Warning Switch Circuit

CIRCUIT DESCRIPTION

The key unlock warning switch goes on when the ignition key is inserted in the key cylinder and goes off when the ignition key is removed.
The ECU operates the key confinement prevention function while the key unlock warning switch is on.

WIRING DIAGRAM

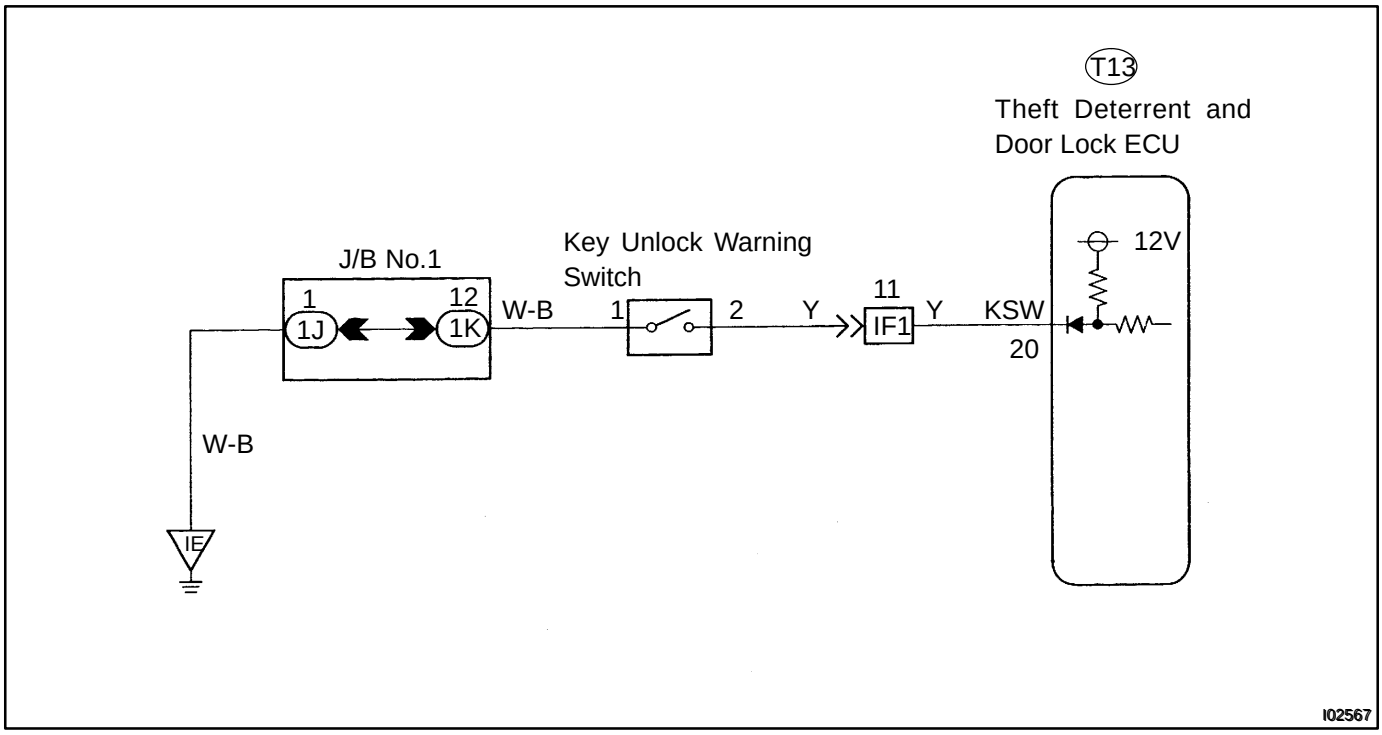

INSPECTION PROCEDURE

1	**Check key unlock warning switch.**

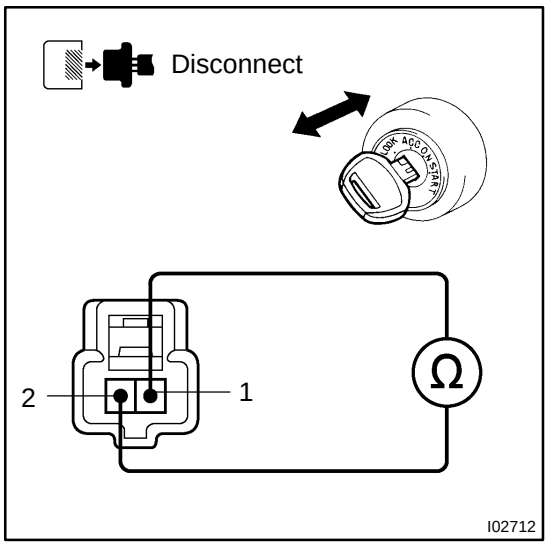

PREPARATION:

Disconnect key unlock warning switch connector.

CHECK:

Check continuity between terminal 1 and 2 of key unlock warning switch connector, when the key is inserted to the key cylinder or removed.

OK:

Switch position	Terminal No. to continuity
ON (Key inserted)	1 - 2
OFF (Key removed)	-

NG → **Replace key unlock warning switch.**

OK ↓

2	**Check harness and connectors between ECU and key unlock warning switch, key unlock warning switch and body ground (See page IN-28).**

NG → **Repair or replace harness or connector.**

OK ↓

Proceed to next circuit inspection shown on matrix chart (See page DI-615).

CRUISE CONTROL SYSTEM

DI4XJ-01

HOW TO PROCEED WITH TROUBLESHOOTING

Troubleshoot in accordance with the procedure on the following page.

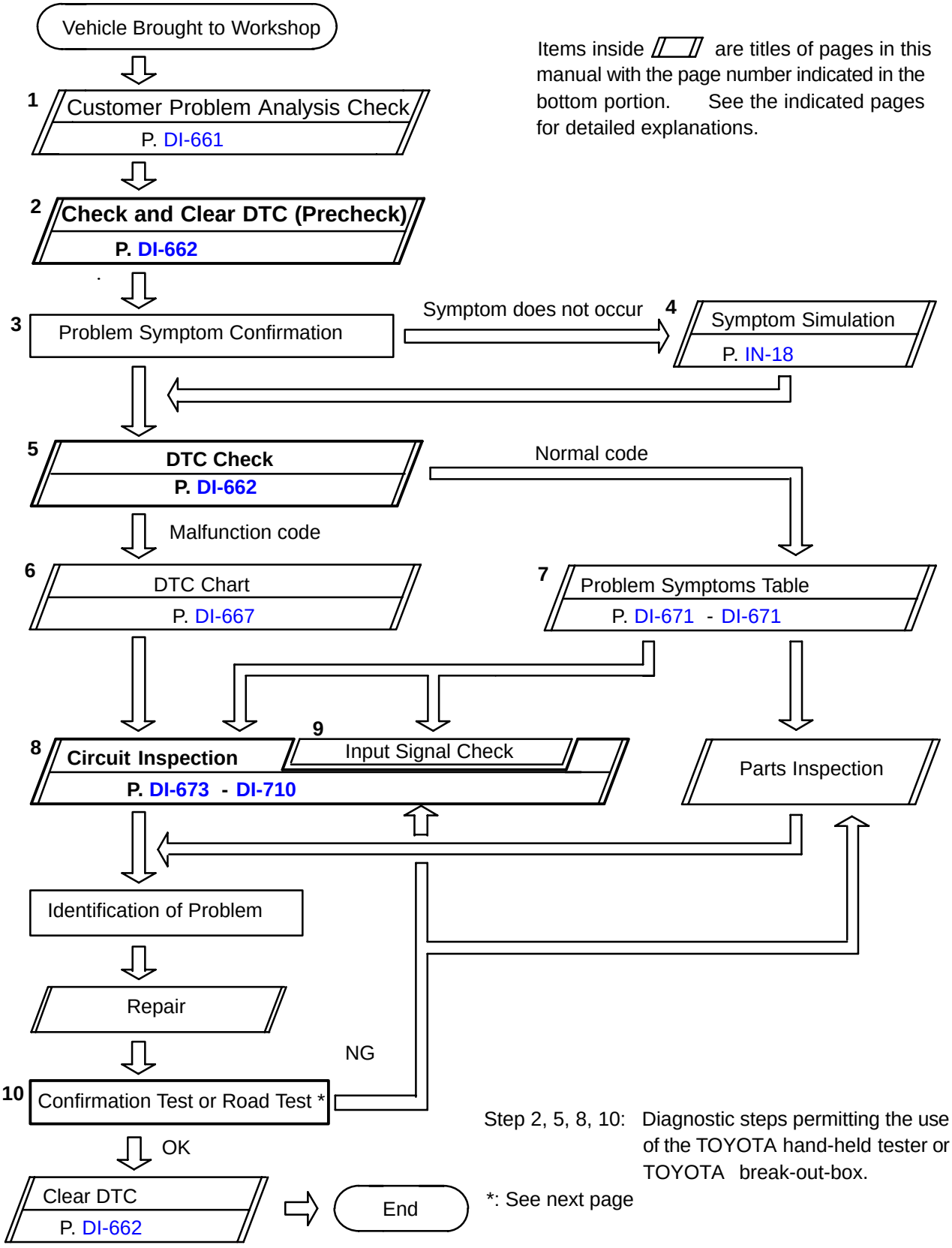

Items inside ▱ are titles of pages in this manual with the page number indicated in the bottom portion. See the indicated pages for detailed explanations.

Step 2, 5, 8, 10: Diagnostic steps permitting the use of the TOYOTA hand-held tester or TOYOTA break-out-box.

*: See next page

DI4XK-01

CUSTOMER PROBLEM ANALYSIS CHECK

CRUISE CONTROL SYSTEM Check Sheet

Inspector's name: _____

Customer's Name		**Registration No.**	
		Registration Year	
		Frame No.	
Date of Vehicle Brought in	/ /	**Odometer Reading**	**km Mile**

Condition of Problem Occurrence	**Date of Problem Occurrence**	/ /
	How Often does Problem Occur?	☑ Continuous ☑ Intermittent (Times a day)
	Vehicle Speed when Problem Occurred	**km Mile**

Symptoms	☑ Auto cancel occurs	□Driving condition ● City driving ● Freeway ● Up hill ● Down hill □After cancel occurred, did the driver activate cruise control again? ● Yes ● No
	● Cancel does not occur	● With brake ON ● Except D position shift ● When control SW turns to CANCEL position
	● Cruise control malfunction	● Slip to acceleration side ● Slip to deceleration side ● Hunting occurs ● O/D cut off does not occur ● O/D does not return
	● Switch malfunction	● SET ● ACCEL ● COAST ● RESUME ● CANCEL
	●	● Remains ON ● Does not light up ● Blinking

DTC Check	**1st Time**	● Normal Code ● Malfunction Code (Code)
	2nd Time	● Normal Code ● Malfunction Code (Code)

DI4XL-01

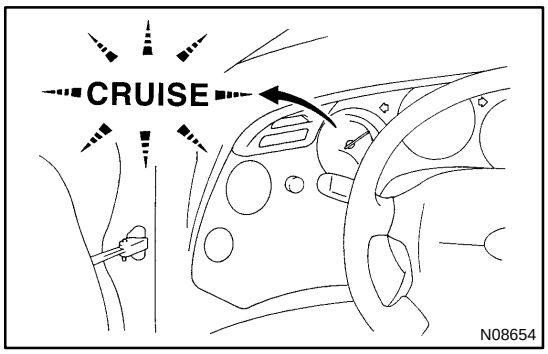

PRE-CHECK

1. DIAGNOSIS SYSTEM

(a) Check the indicator.

(1) Turn the ignition switch to ON.

(2) Check that the CRUISE MAIN indicator light comes on when the cruise control main switch is turned on, and that the indicator light goes off when the main switch is turned OFF.

HINT:

If the indicator check result is not normal, proceed to trouble-shooting (See page BE-2) for the combination meter section.

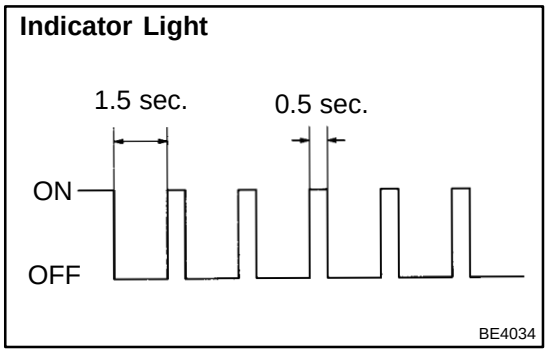

(b) Clear the DTC.

HINT:

If a malfunction occurs in the No.1 vehicle speed sensors or actuator, etc. during cruise control driving, the ECU actuates AUTO CANCEL of the cruise control and turns on and off the CRUISE MAIN indicator light to inform the driver of a malfunction. At the same time, the malfunction is stopped in memory as a DTC.

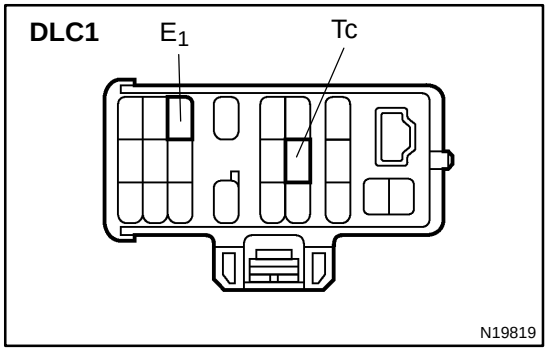

(c) Output of DTC using diagnosis check wire.

(1) Turn the ignition switch ON.

(2) Using SST, connect terminals Tc and E_1 of DLC1.

SST 09843-18020

(3) Read the DTC on the CRUISE MAIN indicator light.

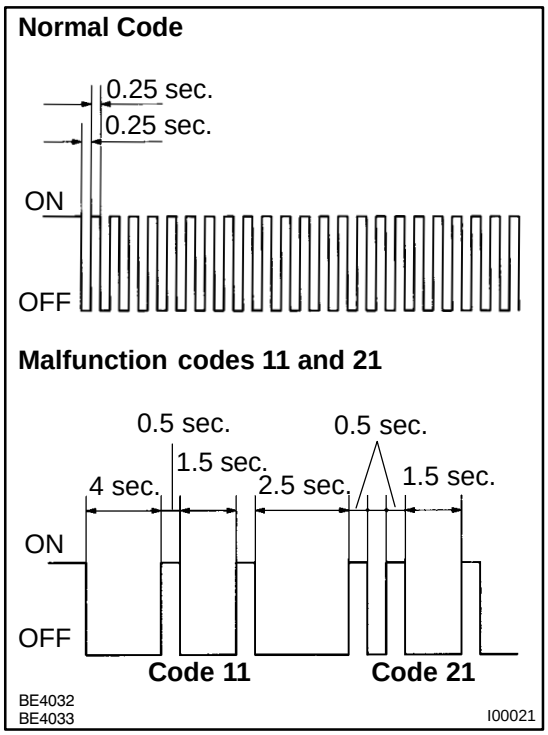

HINT:

- If the DTC is not output, inspect the diagnosis circuit (See page DI-708).
- As an example, the blinking patterns for codes; normal, 11 and 21 are shown in the illustration.

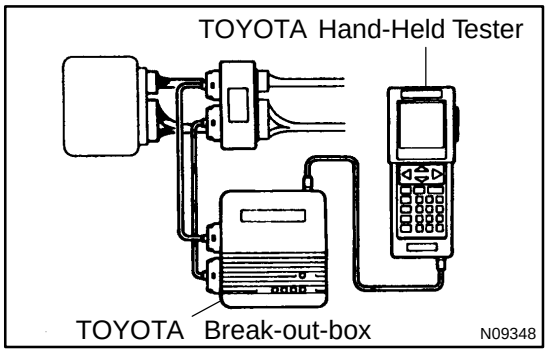

2. ECU TERMINAL VALUES MEASUREMENT BY USING TOYOTA BRAKE-OUT-BOX AND TOYOTA HAND-HELD TESTER

(a) Hook up the TOYOTA break- out- box and TOYOTA hand-held tester to the vehicle.

(b) Read the ECU input/output values by following the prompts on the tester screen.

(c) Please refer to the TOYOTA hand-held tester has a "Snapshot" function. This records the measured data and is effective in the diagnosis of intermittent problems.

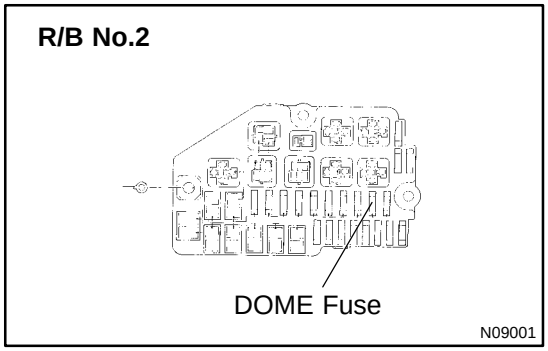

3. DTC CLEARANCE

(a) After completing repairs, the DTC retained in memory can be cleared by removing the DOME fuse for 10 seconds or more, with the ignition switch off.

(b) Check that the normal code is displayed after connecting the fuse.

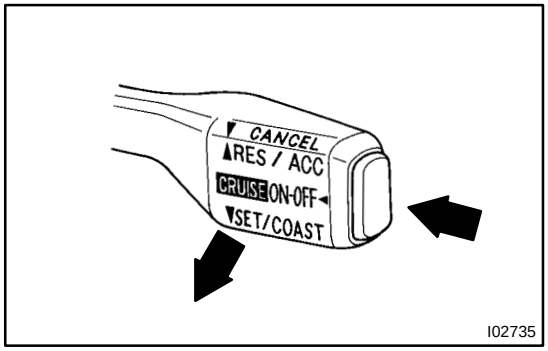

4. PROBLEM SYMPTOM CONFIRMATION (Road Test)

(a) Inspection the SET switch.

(1) Push the main switch ON.

(2) Drive at a desired speed (40 km/h (25 mph) or higher).

(3) Press the control switch to the SET/COAST.

(4) After releasing the switch, check that the vehicle cruises at the desired speed.

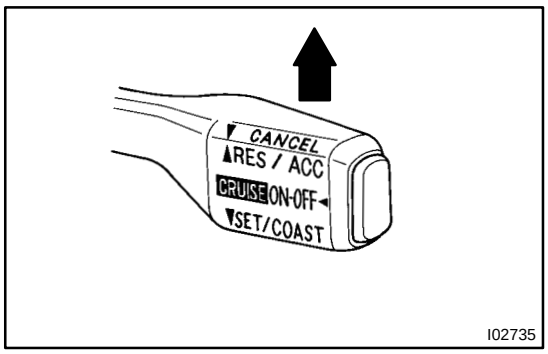

(b) Inspect the ACCEL switch.
(1) Push the main switch ON.
(2) Drive at a desired speed (40 km/h (25 mph) or higher).
(3) Check that the vehicle speed is increased while the control switch turned to RES/ACC, and that the vehicle cruise at the set speed when the switch is released.
(4) Momentarily press the control switch upward in the RES/ACC and then immediately release it. Check that the vehicle speed increases by about 1.5 km/h (Tap-up function).

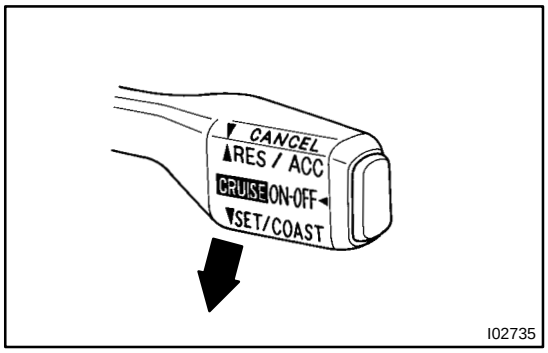

(c) Inspect the COAST switch.
(1) Push the main switch ON.
(2) Drive at a desired speed (40 km/h (25 mph) or higher).
(3) Check that the vehicle speed is decreased while the control switch is turned to SET/COAST, and the vehicle cruise at the set speed when the switch is released.
(4) Momentarily press the control switch is turned to SET/COAST, and then immediately release it. Check that the vehicle speed decreases by about 1.5 km/h (Tap-down function).

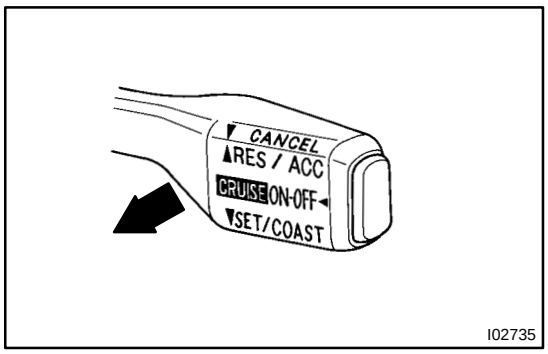

(d) Inspect the CANCEL switch.
(1) Push the main switch ON.
(2) Drive at a desired speed (40 km/h (25 mph) or higher).
(3) When operating one of the followings, check that the cruise control system is cancelled and that the normal driving mode is reset.
- ☐ Depress the brake pedal
- ☐ Depress the clutch pedal (M/T)
- ☐ Shift to except D position (A/T)
- ☐ Turn the main switch OFF
- ☐ Pull the cruise control switch to CANCEL

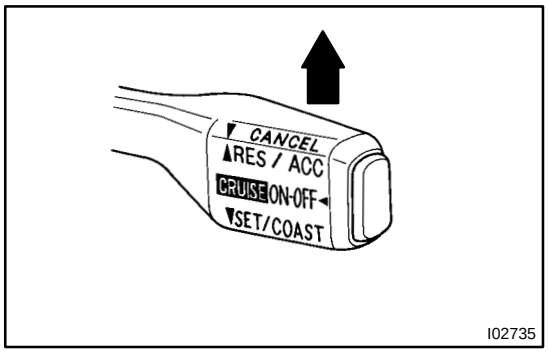

(e) Inspect the RESUME switch.
(1) Push the main switch ON.
(2) Drive at a desired speed (40 km/h (25 mph) or higher).
(3) When operating one of the followings, check that the cruise control system is cancelled and that the normal driving mode is reset.
- ☐ Depress the brake pedal
- ☐ Depress the clutch pedal (M/T)
- ☐ Shift to except D position (A/T)
- ☐ Turn the main switch OFF
- ☐ Pull the cruise control switch to CANCEL

(4) After the control switch is turned to RES/ACC at the driving speed of more than 40 km/h (25 mph), check that the vehicle restores the speed prior to the cancellation.

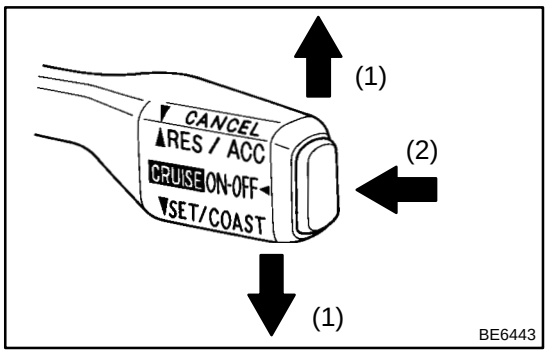

5. Using TOYOTA hand-held tester: INPUT SIGNAL CHECK

HINT:

(1) For check No.1 – No.2

□ Turn the ignition switch ON.

(2) For check No.3

□ Turn ignition switch ON.

□ Shift to D position.

(3) For check No.4

□ Jack up the vehicle.

□ Start the engine.

□ Shift to D position.

(a) Press the control switch to SET/COAST or RES/ACC position and hold it down or hold it up ”1”.

(b) Push the main switch ON ”2”.

(c) Check that the CRUISE MAIN indicator light blinks twice or 3 times repeatedly after 3 seconds.

(d) Turn the SET/COAST or RES/ACC switch OFF.

(e) Operate each switch as listed in the table below.

(f) Read the blinking pattern of the CRUISE MAIN indicator light.

(g) After performing the check, turn the main switch OFF.

HINT:

When 2 or more signals are input to the ECU, the lowest numbered code will be displayed first.

No.	Operation Method	CRUISE MAIN Indicator Light Blinking Pattern	Diagnosis
1	Turn SET/COAST switch ON	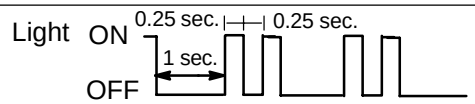	SET / COAST switch circuit is normal
2	Turn RES/ACC switch ON		RES / ACC switch circuit is normal
3	Turn CANCEL switch ON	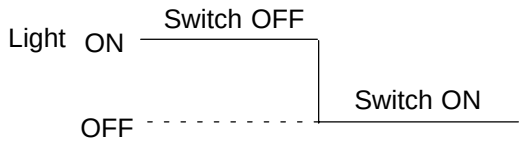	CANCEL switch circuit is normal
	Turn stop light switch ON Depress brake pedal		Stop light switch circuit is normal
	Turn PNP switch OFF (Shift to except D position)	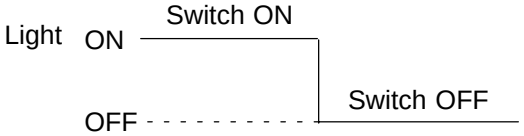	PNP switch circuit is normal
	Turn clutch switch OFF (Depress clutch pedal)		Clutch switch circuit is normal
4	Drive at about 40 km/h (25 mph) or higher	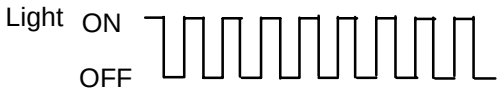	Vehicle Speed Sensor is normal
	Drive at about 40 km/h (25 mph) or below		

DI4XM-01

DIAGNOSTIC TROUBLE CODE CHART

If a malfunction code is displayed during the DTC check, check the circuit listed for that code in the table below and proceed to the appropriate page.

DTC No. (See Page)	Detection Item	Trouble Area
11, 15 (DI-673)	□Actuator Motor Circuit	□Cruise control actuator motor □Harness or connector between actuator motor and ECU □ECU
12 (DI-675)	□Actuator Magnetic Clutch Circuit	□Cruise control magnetic clutch □Harness or connector between ECU and magnetic clutch, magnetic clutch and body ground □ECU
14 (DI-677)	□Actuator Motor Circuit	□Cruise control actuator motor □Harness or connector between actuator motor and ECU □ECU
21 (DI-679)	□Vehicle Speed Sensor Circuit	□Vehicle speed sensor □ECU □Combination meter □Harness or connector between vehicle speed sensor and ECM, ECM and combination meter, combination meter and ECU □ECU
23 (DI-681)	□Vehicle Speed Sensor Circuit	□Vehicle speed sensor □Harness or connector (SPD) □ECU
32 (DI-682)	□Control Switch Circuit (Cruise Control Switch)	□Cruise control switch □Harness or connector between control switch and ECU □ECU
41	□Cruise Control ECU	□ECU
42	□Source voltage drop	□Power source
51 (DI-685)	□Idle switch circuit	□Throttle position sensor □Harness or connector between cruise control ECU and throttle position sensor □ECU

HINT:

- □ 1. When 2 or more codes are indicated, the lowest numbered code will be displayed first.
- □ 2. If the inspection ”Proceed to next circuit inspection shown on matrix chart” is given in the flow chart for each circuit, proceed to the circuit with the next highest number in the table to continue check.
- □ 3. If the trouble still reappears even though there are no abnormalities in any of the other circuit, then check or replace the cruise control ECU as the last step.
- □ (*) When the vehicle speed decrease on uphill roads, the speed can be set again and driving continued. (This is not a malfunction.)

DI4XN-01

PARTS LOCATION

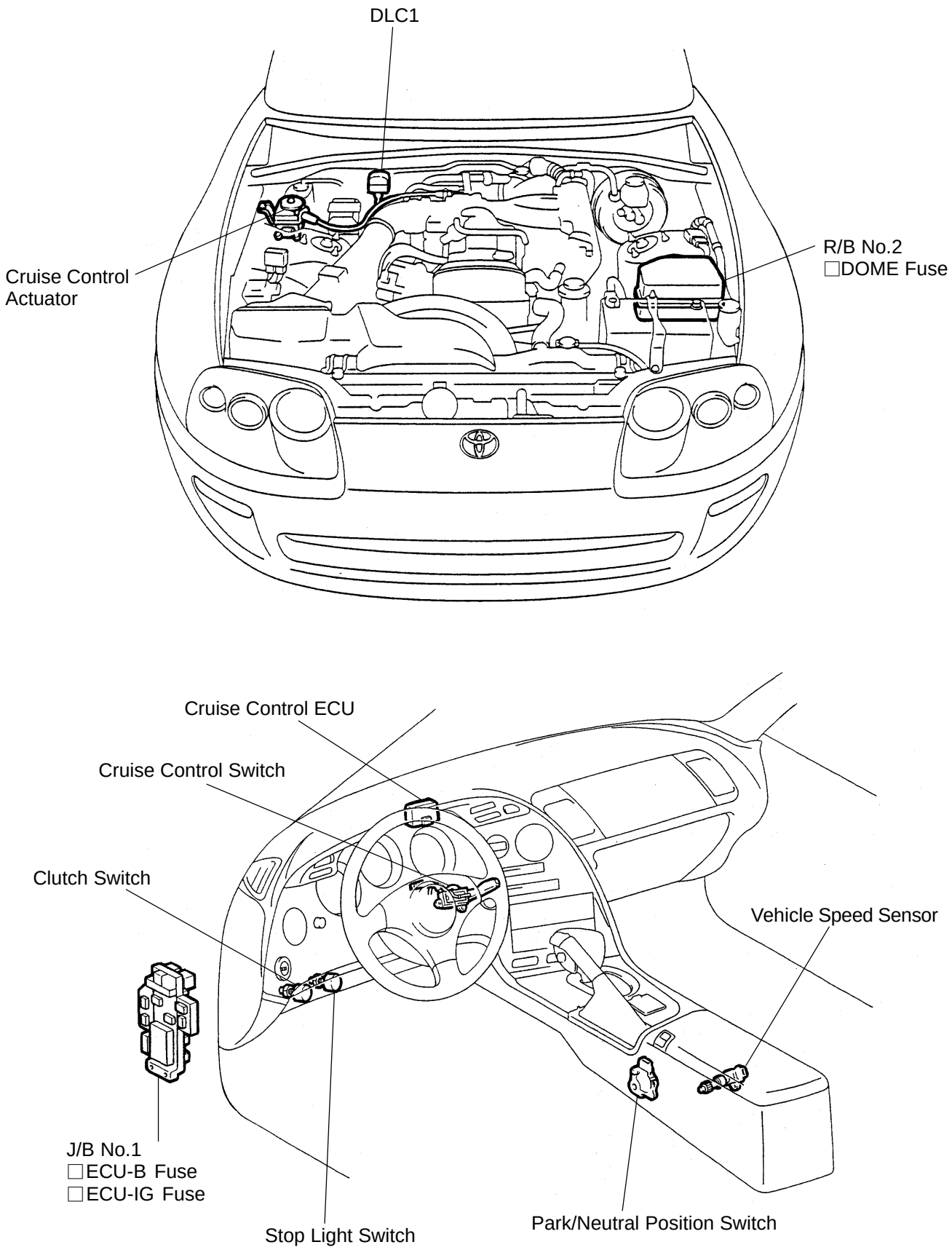

I02713
I02713

DI4XO-01

TERMINALS OF ECM

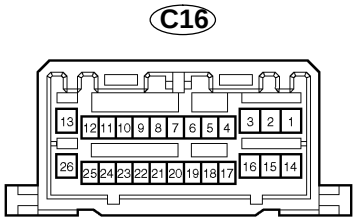

I04621

Symbols (Terminals No.)	Wiring Color	Condition	STD Voltage (V)
D ↔ GND (C16-2 ↔ C16-13)	G-R ↔ W-B	M/T: Depress clutch pedal A/T: Shift to except D position	Below 1 V
		M/T: Release clutch pedal A/T: Shift to D position	10 - 16 V
PI ↔ GND (C16-7 ↔ C16-13)	O ↔ W-B	Ignition switch ON Cruise control main switch ON	Below 1.2 V
		Ignition switch ON Cruise control main switch OFF	10 - 16 V
TC ↔ GND (C16-8 ↔ C16-13)	R ↔ W-B	Ignition switch ON	10 - 16 V
		Ignition switch ON Connect terminals TC and E_1 of DLC1	Below 1 V
OD ↔ GND (C16-9 ↔ C16-13)	LG-B ↔ W-B	During cruise control driving OD switch ON	10 - 16 V
		During cruise control driving OD switch OFF (3rd driving)	Below 1 V
L ↔ GND (C16-10 ↔ C16-13)	B-W ↔ W-B	During cruise control driving	9 - 15 V
		Except during cruise control driving	Below 1 V
MC ↔ GND (C16-11 ↔ C16-13)	G-R ↔ W-B	During cruise control driving COAST switch hold ON	9 - 15 V
		During cruise control driving ACC switch hold ON	Below 1 V
MO ↔ GND (C16-12 ↔ C16-13)	LG ↔ W-B	During cruise control driving ACC switch hold ON	9 - 15 V
		During cruise control driving COAST switch hold ON	Below 1 V
GND ↔ Body Ground (C16-13 ↔ Body Ground)	W-B ↔ Body Ground	Constant	Below 1 V
B ↔ GND (C16-14 ↔ C16-13)	B-R ↔ W-B	Ignition switch ON	10 - 16 V
BATT ↔ GND (C16-15 ↔ C16-13)	W-R ↔ W-B	Constant	10 - 16 V
STP ↔ GND (C16-16 ↔ C16-13)	G-W ↔ W-B	Depress brake pedal	10 - 16 V
	G-W ↔ W-B	Release brake pedal	Below 1 V

CCS ↔ GND (C16-18 ↔ C16-13)	L ↔ W-B	Ignition switch ON	10 - 16 V
		Ignition switch ON CANCEL switch hold ON	4.2 - 8.7 V
		Ignition switch ON SET/COAST switch hold ON	2.5 - 6.2 V
		Ignition switch ON RES/ACC switch hold ON	0.8 - 3.6 V
CMS ↔ GND (C16-19 ↔ C16-13)	R-Y ↔ W-B	Ignition switch ON Main switch ON	Below 1 V
		Ignition switch ON Main switch OFF	10 - 16 V
SPD ↔ GND (C16-20 ↔ C16-13)	P ↔ W-B	Ignition switch ON	10 - 16 V
		During driving	Repeatedly change from below 1 V to 10 - 16 V
IDL ↔ GND (C16-21 ↔ C16-13)	R-B ↔ W-B	Ignition switch ON Throttle valve fully closed	Below 1 V
		Ignition switch ON Throttle valve fully opened	10 - 16 V
ECT ↔ GND (C16-22 ↔ C16-13)	R-L ↔ W-B	During driving Gear position O/D	Below 1 V
		During driving Gear position 3rd	10 - 16 V

DI4XP-01

PROBLEM SYMPTOMS TABLE

Symptom	Suspect Area	See page
Cruise control system does not set. Cruise control system does not operate.	Input signal check No.4: OK 1. ECU Power Source Circuit 2. Wire Harness 3. Main Switch Circuit 4. Control Switch Circuit 5. Stop Light Switch Circuit 6. PNP Switch or Clutch Switch Circuit 7. Actuator Control Cable 8. Actuator Motor Circuit 9. Cruise Control ECU Input signal check No.4: NG 1. Vehicle Speed Sensor Circuit 2. Cruise Control ECU	 DI-699 DI-704 DI-682 DI-687 DI-694 , DI-697 DI-710 DI-673 IN-28 DI-679 IIN-28
Indicator light does not light up.	1. Wire Harness 2. CRUISE MAIN Indicator Light Circuit 3. Cruise Control ECU	 DI-706 IIN-28
Vehicle speed drop when the cruise control switch turned to SET.	1. Actuator Control Cable 2. ECU Power Source Circuit 3. Idle Signal Circuit 4. Actuator Motor Circuit 5. Cruise Control ECU	DI-710 DI-699 DI-685 DI-673 IN-28
Set speed deviates on high or low side.	Input signal check No.4: OK 1. Vehicle Speed Sensor Circuit 2. Actuator Control Cable 3. ECU Power Source Circuit 4. Actuator Motor Circuit 5. Cruise Control ECU Input signal check No.4: NG 1. Cruise Control ECU	 DI-679 DI-710 DI-699 DI-673 IN-28 IN-28
Vehicle speed fluctuates when cruise control switch turn to SET.	1. Vehicle Speed Sensor Circuit 2. Actuator Control Cable 3. Idle Signal Circuit 4. ECT Communication Circuit 5. Actuator Motor Circuit 6. Cruise Control ECU	DI-679 DI-710 DI-685 DI-690 DI-673 IN-28
Acceleration response is sluggish when cruise control switch turn to ”ACCEL” or ”RESUME”.	Input signal check No.4: OK 1. Actuator Control Cable 2. Vehicle Speed Sensor Circuit 3. Actuator Motor Circuit 4. Cruise Control ECU Input signal check No.4: NG 1. Control Switch Circuit 2. Cruise Control ECU	 DI-673 DI-679 DI-710 IN-28 DI-682 IN-28
Set speed does not cancel when brake pedal depressed.	Input signal check No.3: OK 1. Cruise Control ECU Input signal check No.3: NG 1. Stop Light Switch Circuit 2. Cruise Control ECU	 IN-28 DI-687 IIN-28
Cruise control does not cancel when transmission is shifted to except D position. (A/T)	Input signal check No.3: OK 1. Cruise Control ECU Input signal check No.3: NG 1. PNP Switch Circuit 2. Cruise Control ECU	 IIN-28 DI-694 IN-28

Cruise control does not cancel when clutch pedal depressed.	Input signal check No.3: OK 1. Cruise Control ECU Input signal check No.3: NG 1. Clutch Switch Circuit 2. Cruise Control ECU	 IN-28 DI-697 IN-28
Cruise control does not cancel when cruise control switch turned to CANCEL.	Input signal check No.3: OK 1. Cruise Control ECU Input signal check No.3: NG 1. Control Switch Circuit 2. Cruise Control ECU	 IN-28 DI-682 IN-28
Vehicle speed does not decrease when cruise control switch turned to COAST.	Input signal check No.1: OK 1. Actuator Motor Circuit 2. Actuator Control Cable 3. Vehicle Speed Sensor Circuit 4. Cruise Control ECU Input signal check No.1: NG 1. Control Switch Circuit 2. Cruise Control ECU	 DI-673 DI-710 DI-679 IIN-28 DI-682 IN-28
Vehicle speed does not accelerate when cruise control switch turned to ACCEL.	Input signal check No.2: OK 1. Actuator Motor Circuit 2. Actuator Control Cable 3. Vehicle Speed Sensor Circuit 4. Cruise Control ECU Input signal check No.2: NG 1. Control Switch Circuit 2. Cruise Control ECU	 DI-673 DI-710 DI-679 IIN-28 DI-682 IN-28
Vehicle speed does not return to memorized speed when cruise control switch turned to RESUME.	Input signal check No.2: OK 1. Actuator Motor Circuit 2. Actuator Control Cable 3. Vehicle Speed Sensor Circuit 4. Cruise Control ECU Input signal check No.2: NG 1. Control Switch Circuit 2. Cruise Control ECU	 DI-673 DI-710 DI-679 IN-28 DI-682 IN-28
Speed can be set below about 40 km/h (25 mph).	Input signal check No.4: OK 1. Cruise Control ECU Input signal check No.4: NG 1. Vehicle Speed Sensor Circuit 2. Cruise Control ECU	 IN-28 DI-679 IN-28
Cruise control does not cancel when speed is less than 40 km/h (25 mph).	Input signal check No.4: OK 1. Actuator Motor Circuit 2. Cruise Control ECU Input signal check No.4: NG 1. Vehicle Speed Sensor Circuit 2. Cruise Control ECU	 DI-673 IIN-28 DI-679 IIN-28

DI4XQ-01

CIRCUIT INSPECTION

DTC	11, 15	Actuator Motor Circuit

CIRCUIT DESCRIPTION

The actuator motor is operated by signals from the ECU. Acceleration and deceleration signals are transmitted by changes in the Duty Ratio (See note below).Duty Ratio

The duty ratio is the ratio of the period of continuity in one cycle. For example, if A is the period of continuity in one cycle, and B is the period of non-continuity, then.

$$\text{Duty Ratio} = \frac{A}{A + B} \times 100\ (\%)$$

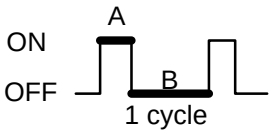

DTC No.	Detection Item	Trouble Area
11	Short in actuator motor circuit	□Cruise control actuator □Harness or connector between actuator and cruise control ECU □Cruise control ECU
15	Open in actuator motor circuit	□Cruise control actuator

WIRING DIAGRAM

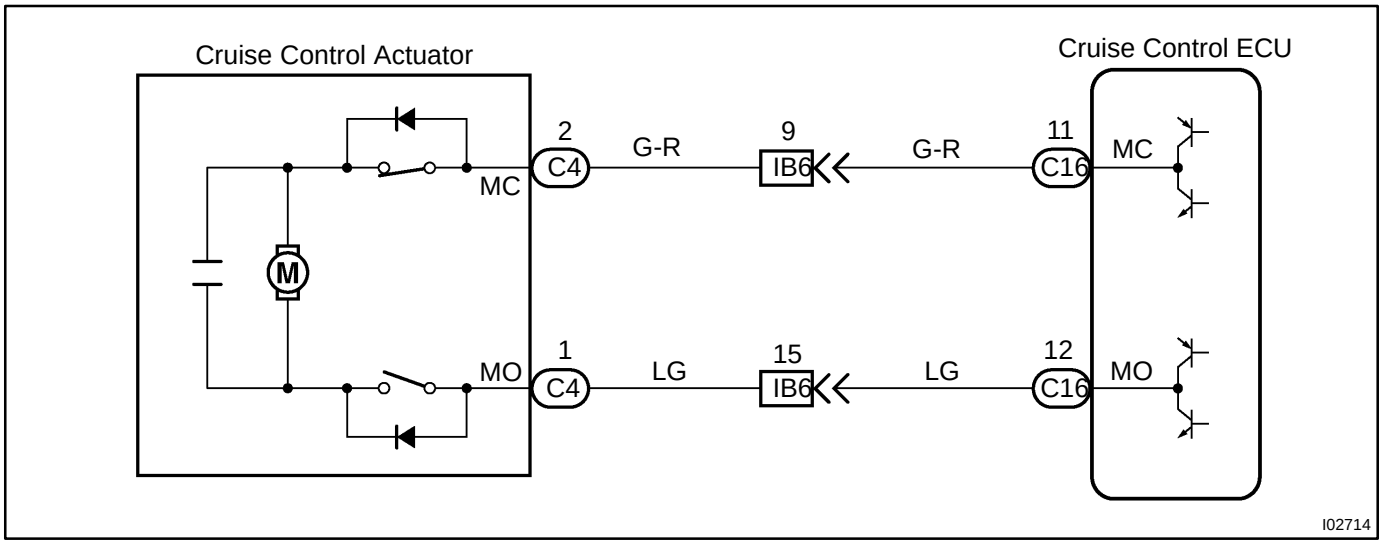

INSPECTION PROCEDURE

1	**Check resistance between terminals MO and MC of cruise control actuator.**

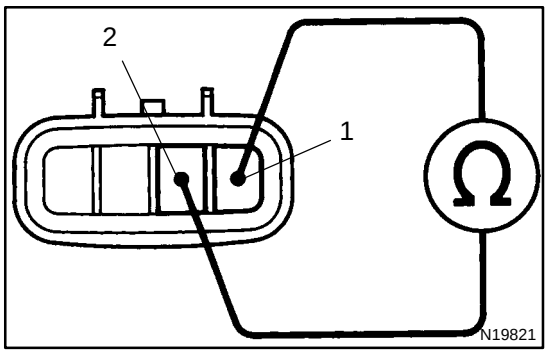

PREPARATION:

(a) Ignition switch ON.

(b) Disconnect actuator connector.

CHECK:

Measure resistance between terminals 1 and 2.

HINT:

If control plate position is fully opened or fully closed, resistance can not measure.

OK:

Resistance: more than 4.2 Ω

NG → **Replace cruise control actuator.**

OK

2	**Check wire harness and connector between terminals MO of cruise control ECU and MO of cruise control actuator (See page IN-28).**

NG → **Repair or replace harness or connector.**

OK

Replace cruise control ECU (See page IN-28).

DI4XR-01

DTC	12	Magnetic Clutch Circuit

CIRCUIT DESCRIPTION

This circuit turns on the magnetic clutch inside the actuator during cruise control operation according to the signal from the ECU. If a malfunction occurs in the actuator or speed sensor, etc. during cruise control operation, the rotor shaft between the motor and control plate is released.
When the brake pedal is depressed, the stoplight switch turns on, supplying electrical power to the stoplight. Power supply to the magnetic clutch is mechanically cut and the magnetic clutch is turned OFF.
When driving downhill, if the vehicle speed exceeds the set speed by 15 km/h (6 mph) above the set speed, then cruise control at the set speed is resumed.

DTC No.	Detection Item	Trouble Area
12	Short in magnetic clutch circuit Open (0.8 sec.) in magnetic clutch circuit	□Cruise contorl actuator magnetic clutch □Harness or connector between ECU and magnetic clutch, magnetic clutch and body ground □Cruise control ECU

WIRING DIAGRAM

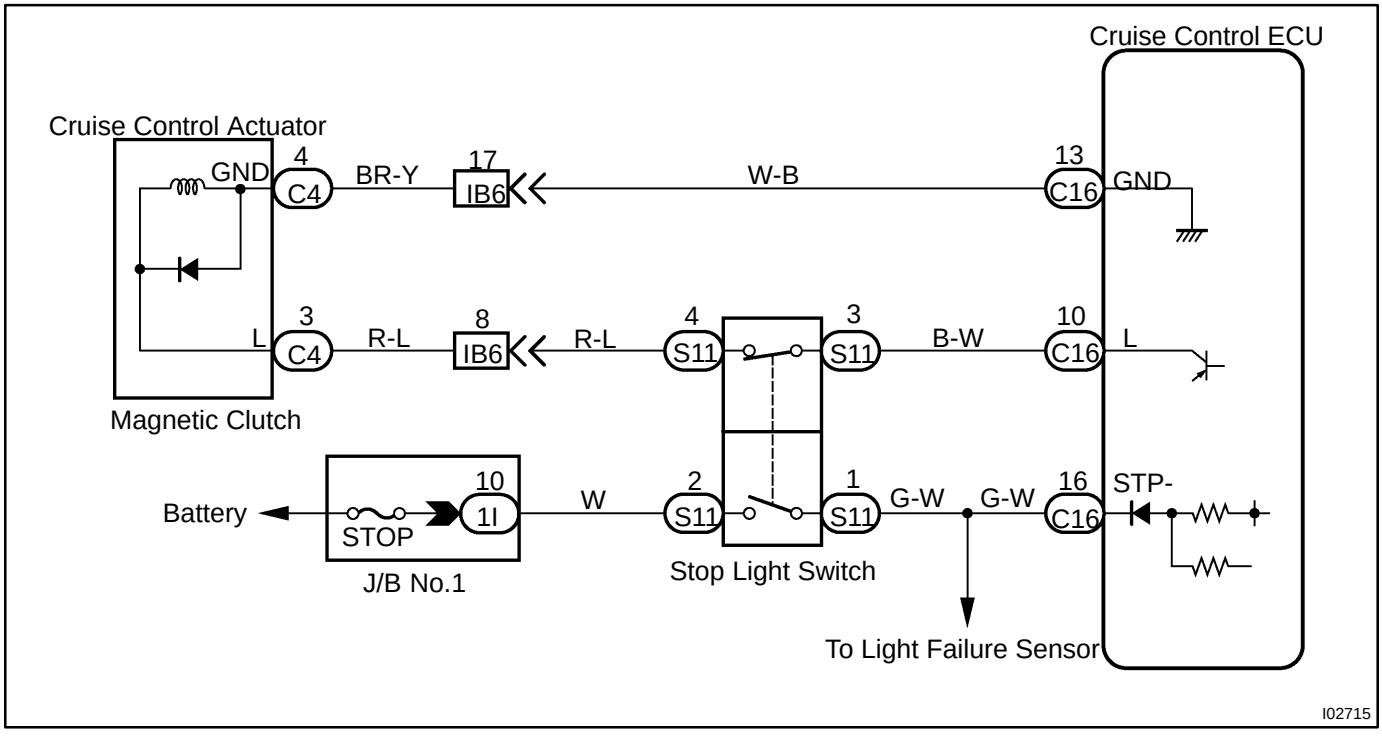

INSPECTION PROCEDURE

1	**Check STOP fuse.**

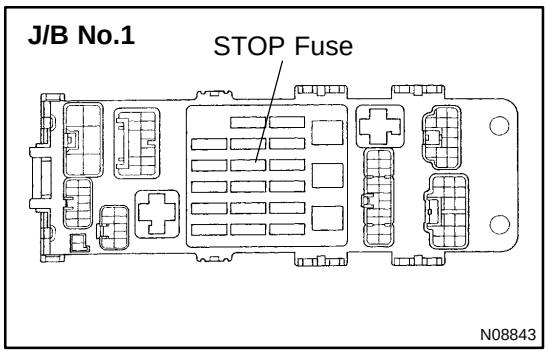

PREPARATION:
Remove STOP fuse from J/B No.1.
CHECK:
Check fuse continuity.
OK:
There is continuity.

NG → **Replace STOP fuse.**

OK

2	**Check harness and connector between actuator and cruise control actuator (See page IN-28).**

NG → **Repair or replace harness or connector.**

OK

Check and replace cruise control ECU (See page IN-28).

DI4XS-01

DTC	14	Actuator Mechanical Malfunction

CIRCUIT DESCRIPTION

See page DI-673 .

WIRING DIAGRAM

See page DI-673 .

INSPECTION PROCEDURE

1	**Check actuator arm locking operation.**

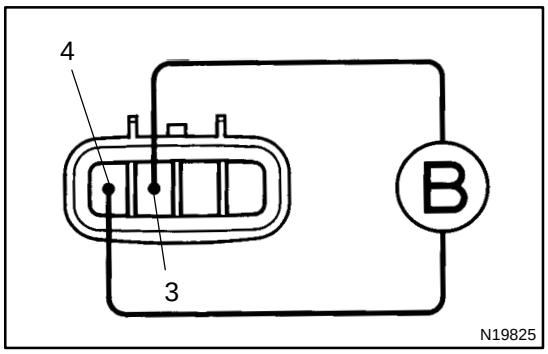

PREPARATION:

(a) Ignition switch OFF.

(b) Disconnect actuator connector.

CHECK:

(a) Connect the positive ⊕ lead from the battery to the terminal 3 of actuator and the negative ⊖ lead to terminal 4.

NOTICE:

Do not connect the high tension cables to the wrong battery terminal. You will damage the cruise control actuator.

(b) Move the control plate by hand.

OK:

Control plate does not move.

NG	**Replace cruise control actuator.**

OK

2	Check actuator operation.

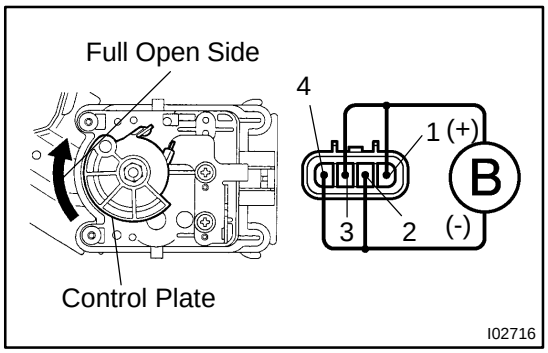

PREPARATION:
Disconnect the actuator connector.
CHECK:
Connect the positive ⊕ lead from the battery to terminals 3 and 1 of actuator, connect the negative ⊖ lead to terminals 4 and 2 of actuator.
OK:

Control arm moves to full open side

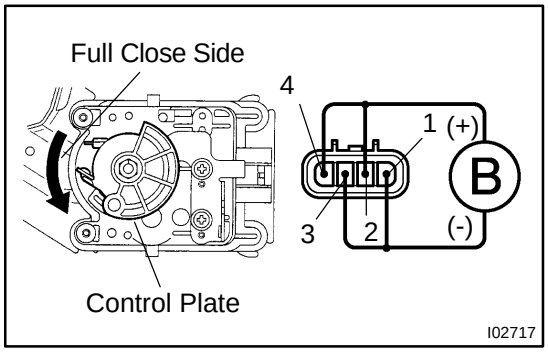

CHECK:
Connect the positive ⊕ lead from the battery to the terminals 4 and 2 of actuator, connect the negative ⊖ lead to terminals 3 and 1 of actuator.
OK:

Control arm moves to full close side

NG → **Replace actuator.**

OK

3	Check harness and connector between actuator and cruise control ECU (See page IN-28).

NG → **Repair or replace harness or connector.**

OK

Check and replace cruise control ECU (See page IN-28).

DI4XT-01

DTC	21	Open in Vehicle Speed Sensor Circuit

CIRCUIT DESCRIPTION

The vehicle speed sensor circuit is sent to cruise control ECU as vehicle speed signal. For each rotation of the shaft, the vehicle speed sensor sends a signal through the combination meter to the cruise control ECU (See the following). The ECU calculates the vehicle speed from this pulse frequency.

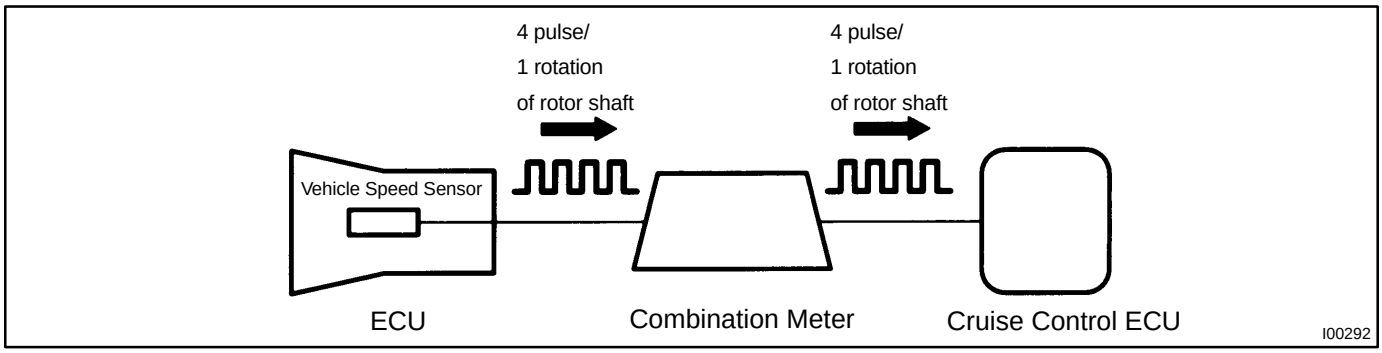

DTC No.	Detection Item	Trouble Area
21	Speed signal is not input to the cruise control ECU while cruise control is set.	□Vehicle speed sensor □Combination meter □Cruise control ECU

WIRING DIAGRAM

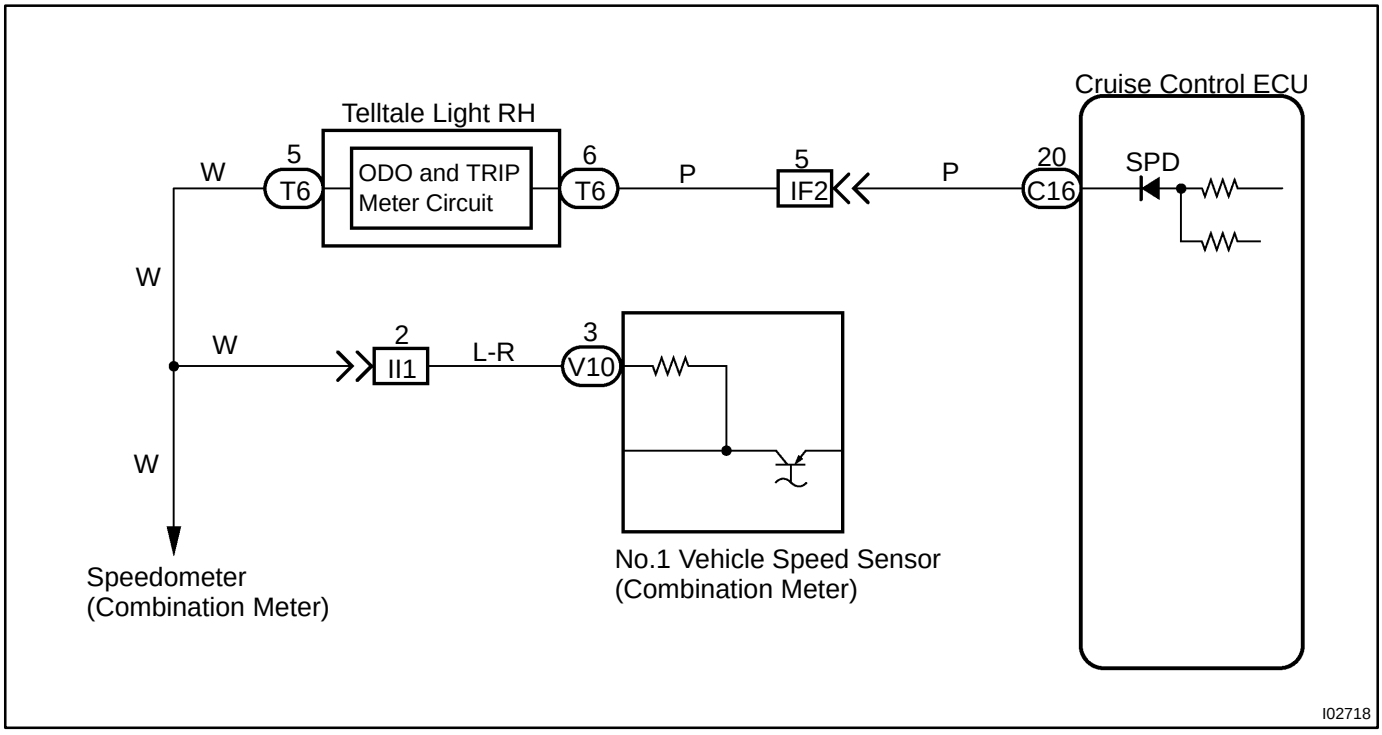

INSPECTION PROCEDURE

1	**Input signal check.**

Input Signal	Indicator Light Blinking Pattern
Drive at about 40 km/h (25 mph) or below	Light: ON — OFF
Drive at about 40 km/h (25 mph) or higher	Light: ON / OFF (blinking)

CHECK:

(a) See input signal check on page

(b) Check indicator light operation when driving with vehicle speed above 40 km/h (25 mph), and with vehicle speed below 40 km/h (25 mph).

OK:

Vehicle speed above 40 km/h (25 mph):
Indicator light blinks
Vehicle speed below 40 km/h (25 mph):
Indicator light stays on

OK → **Check and replace cruise control ECU (See page IN-28).**

NG

2	**Check harness and connector between speed meter and cruise control ECU (See page IN-28).**

NG → **Repair or replace harness or connector.**

OK

3	**Check vehicle speed sensor (See page BE-43).**

NG → **Replace vehicle speed sensor.**

OK

Check and replace cruise control ECU (See page IN-28).

DI4XU-01

DTC	23	Vehicle Speed Signal Abnormal

CIRCUIT DESCRIPTION

See page DI-679 .

DTC No.	Detection Item	Trouble Area
23	□Vehicle speed sensor pulse is abnormal. (When sped signal is not input to the ECU below 0.2 sec., code will be displayed.)	□Vehicle speed sensor □Cruise control ECU

WIRING DIAGRAM

See page DI-679 .

INSPECTION PROCEDURE

1	Check vehicle speed sensor (See page BE-43).

NG → Replace vehicle speed sensor.

OK →

Check and replace cruise control ECU (See page IN-28).

DI4XV-01

DTC	32	Control Switch Circuit (Cruise Control Switch)

CIRCUIT DESCRIPTION

This circuit carries the SET/COAST, RESUME/ACCEL and CANCEl signals (each voltage) to the ECU.

DTC No.	Detection Item	Trouble Area
32	Short in control switch circuit	□ Cruise control switch □ Harness or connector between control switch and cruise control ECU. □ Cruise control ECU

WIRING DIAGRAM

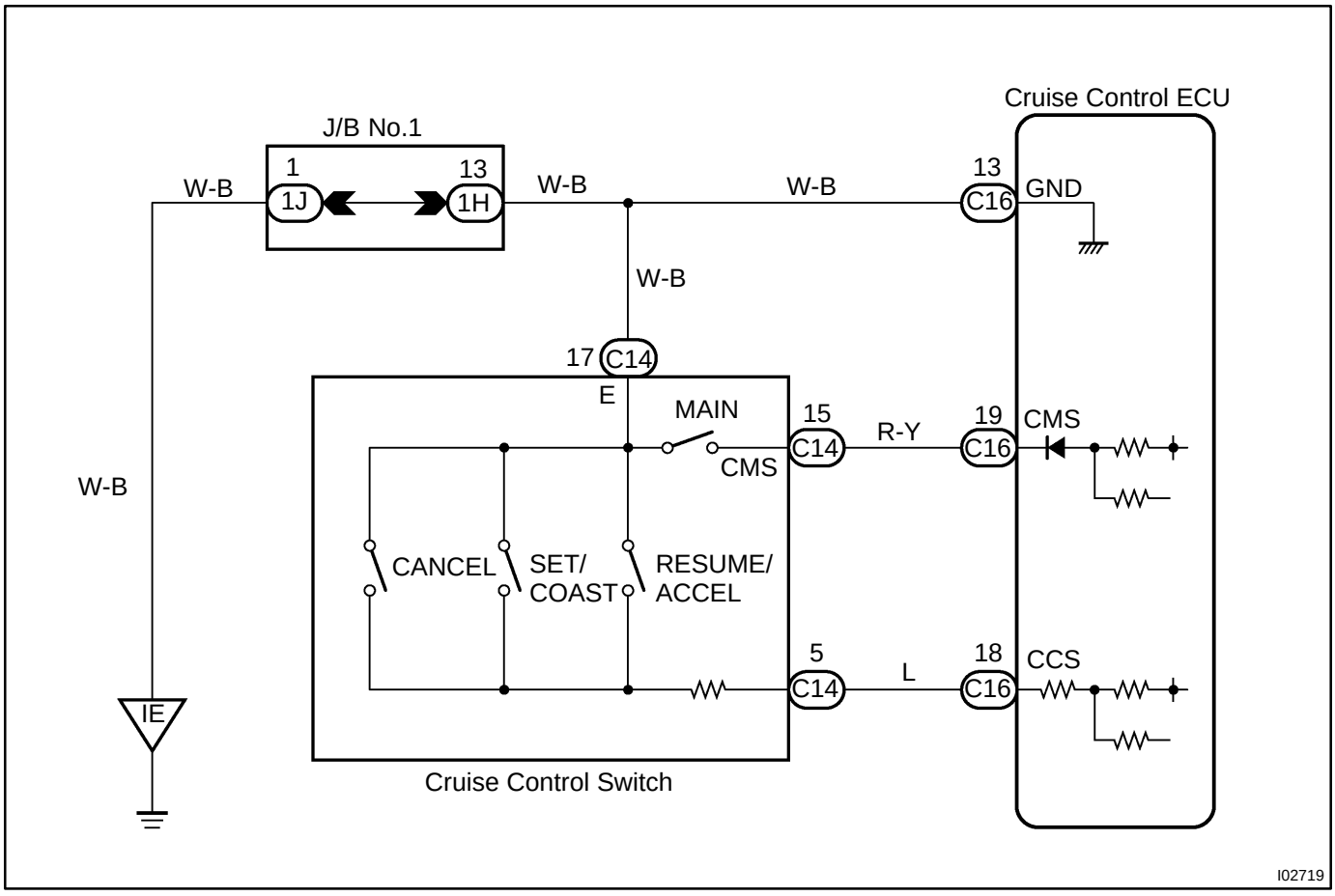

INSPECTION PROCEDURE

1	Input signal check.

Input Signal	Indicator Light Blinking Pattern
SET/COAST switch	2 Pulses: ON / OFF
RESUME/ACCEL switch	3 Pulses: ON / OFF
CANCEL switch	SW OFF: ON / OFF; SW ON

PREPARATION:

See input signal check on page DI-662 .

CHECK:

Check the indicator light operation when each of the SET/ COAST, RESUME/ACCEL and CANCEL is turned on.

OK:

SET/COAST, RESUME/ACCEL switch

The signals shown in the table on the left should be output when each switch is ON. The signal should disappear when the switch is turned OFF.

CANCEL switch

The indicator light goes off when the cancel switch is turned on.

OK → **Wait and see.**

NG

2	Check control switch.

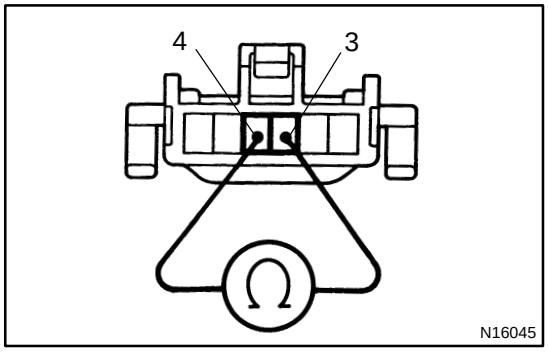

PREPARATION:

(a) Remove steering wheel center pad (See page SR-1 1).

(b) Disconnect control switch connector.

CHECK:

Measure resistance between terminals 3 and 4 of control switch connector when control switch is operated.

Switch position	Resistance (Ω)
Neutral	∞ (No continuity)
RES/ACC	50 - 80
SET/COAST	180 - 220
CANCEL	400 - 440

OK → **Repair control switch.**

NG

3	**Check harness and connector between cruise control switch and cruise control ECU (See page IN-28).**

NG → **Repair or replace harness or connector.**

OK

4	**Input signal check (See step 1).**

OK → **Wait and see.**

NG

Check and replace cruise control ECU (See page IN-28).

DI4XW-01

DTC	51	Idle Signal Circuit

CIRCUIT DESCRIPTION

When the idle switch in turned ON, a signal is sent to the ECU. The ECU uses this signal to correct the discrepancy between the throttle valve position and the actuator position sensor value to enable accurate cruise control at the set speed. If the idle switch is malfunctioning, problem symptoms also occur in the engine, so also inspect the engine.

DTC No.	Detection Item	Trouble Area
51	Short in idle signal circuit	□Harness or connector between cruise control ECU and throttle position sensor □Throttle position sensor □Cruise control ECU

WIRING DIAGRAM

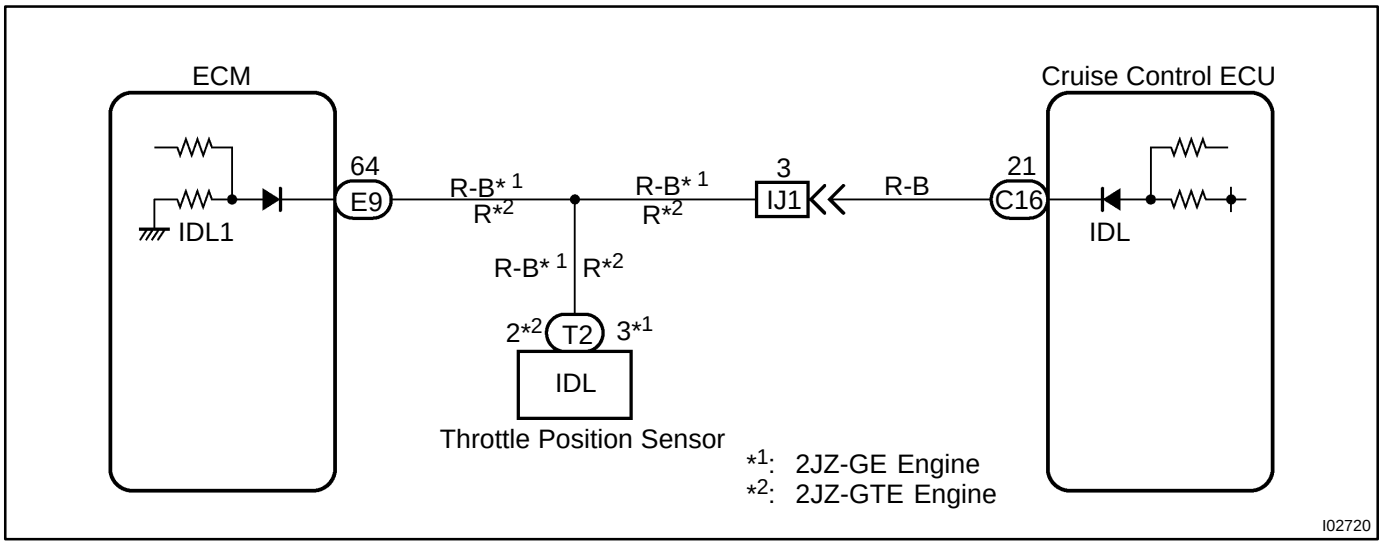

INSPECTION PROCEDURE

1	Check throttle position sensor circuit (2JZ-GE: See page SF-42 , 2JZ-GTE: See page SF-44).

NG → Replace throttle position sensor.

OK ↓

2	Check harness and connector between ECM and throttle position sensor (See page IN-28).

NG → Repair or replace harness or connector.

OK ↓

3	Check harness and connector between cruise control ECU and throttle position sensor (See page IN-28).

NG → Repair or replace harness or connector.

OK ↓

Check and replace cruise control ECU (See page IN-28).

DI4XX-01

Stop Light Switch Circuit

CIRCUIT DESCRIPTION

When the brake is on, battery positive voltage normally applies through the STOP fuse and stop light switch to terminal STP- of the ECU, and the ECU turns the cruise control off.
A fail-safe function is provided so that cancel functions normally, even if there is a malfunction in the stop light signal circuit.
If the harness connected to terminal STP- has an open circuit, terminal STP- will have battery positive voltage and the cruise control will be turned off.
Also, when the brake is on, the magnetic clutch is cut mechanically by the stop light switch, turning the cruise control off. (See page DI-675 for operation of the magnetic clutch)

WIRING DIAGRAM

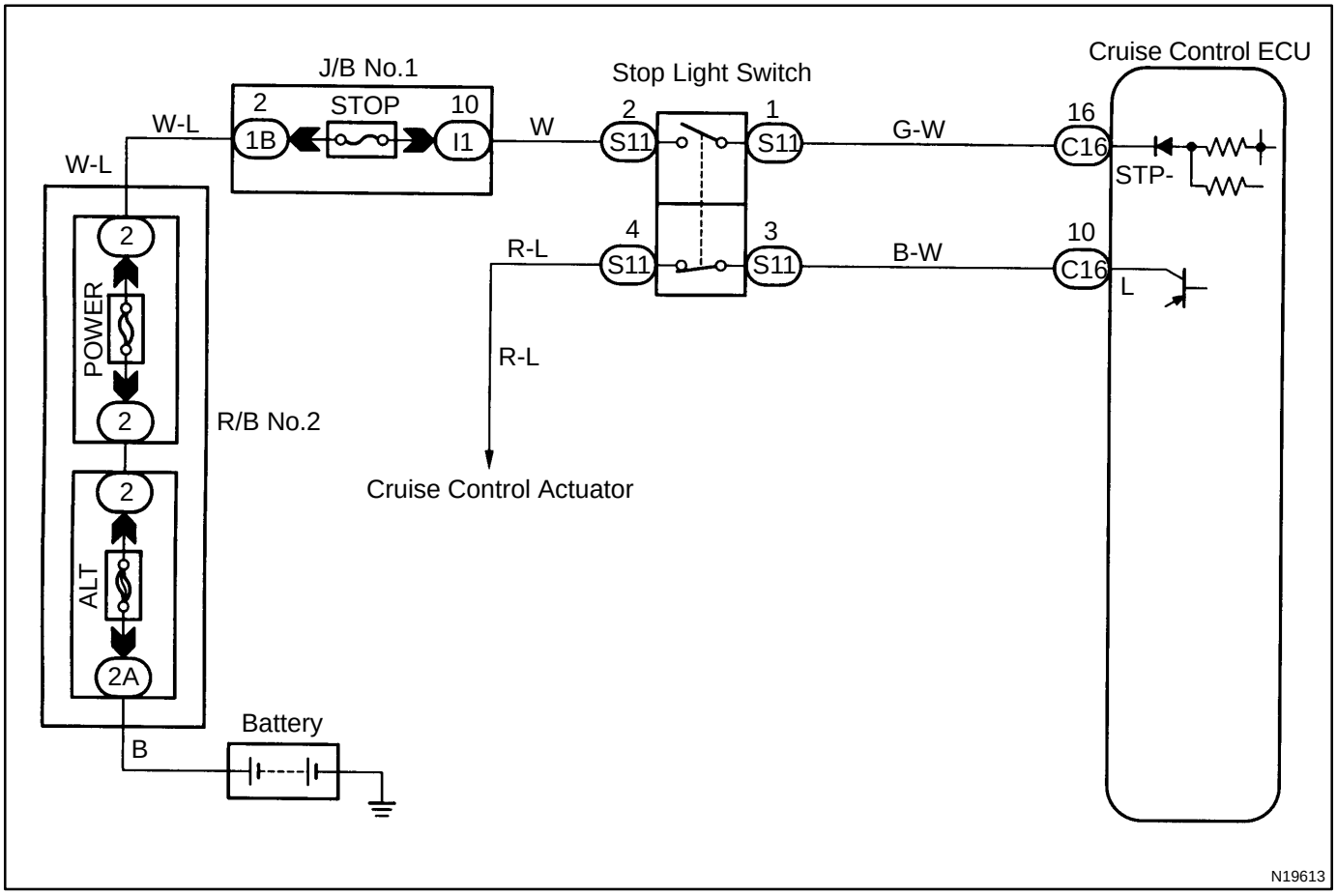

INSPECTION PROCEDURE

1	**Check operation of stop light.**

CHECK:

Check that stop light comes on when brake pedal is depressed, and turns off when brake pedal is released.

NG → **Check stop light system.**

OK

2	**Input signal check.**

Input Signal	Indicator Light Blinking Pattern
Stop Light switch ON	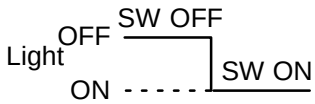

CHECK:

(a) See input signal check on DI-662 .

(b) Check the indicator light when the brake pedal is depressed.

OK:

The indicator light goes off when the brake pedal is depressed.

OK → **Proceed to next circuit inspection shown on problem symptoms table (See page DI-671).**

NG

3	Check voltage between terminal STP- of cruise control ECU connector and body ground.

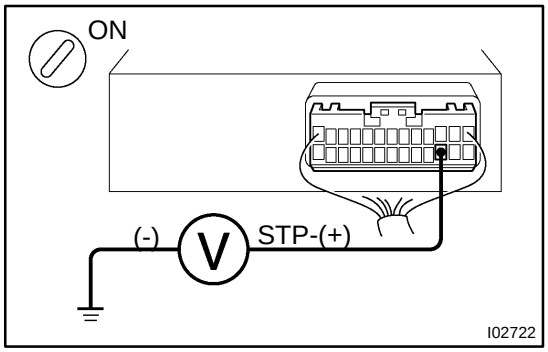

PREPARATION:

Remove cruise control ECU with connectors still connected.

CHECK:

(a) Turn ignition switch ON.

(b) Measure voltage between terminal STP-of cruise control ECU connector and body ground, when the brake pedal is depressed and released.

OK:

Depressed	10 - 14 V
Released	Below 1 V

OK → **Proceed to next circuit inspection shown on problem symptoms table (See page DI-671).**

NG

4	Check for open in harness and connectors between terminal STP- of cruise control ECU and stop light switch (See page IN-28).

NG → **Repair or replace harness or connector.**

OK

Check and replace cruise control ECU (See page IN-28).

DI4XY-01

Electronically Controlled Transmission Communication Circuit

CIRCUIT DESCRIPTION

When driving uphill under cruise control, in order to reduce shifting due to ON-OFF overdrive operation and to provide smooth driving, when down shifting in the electronically controlled transmission occurs, a signal to prevent upshift until the end of the uphill slope is sent from the cruise control ECU to the electronically controlled transmission.

Terminal ECM of the cruise control ECU detects the shift change signal (output to electronically controlled transmission No.2 solenoid) from the electronically controlled transmission.

If vehicle speed down, also when terminal electronically controlled transmission of the cruise control ECU receive down shifting signal, it sends a signal from terminal OD to ECM to cut overdrive until the end of the uphill slope, and the gear shifts are reduced and gear shift points in the electronically controlled transmission are changed.

WIRING DIAGRAM

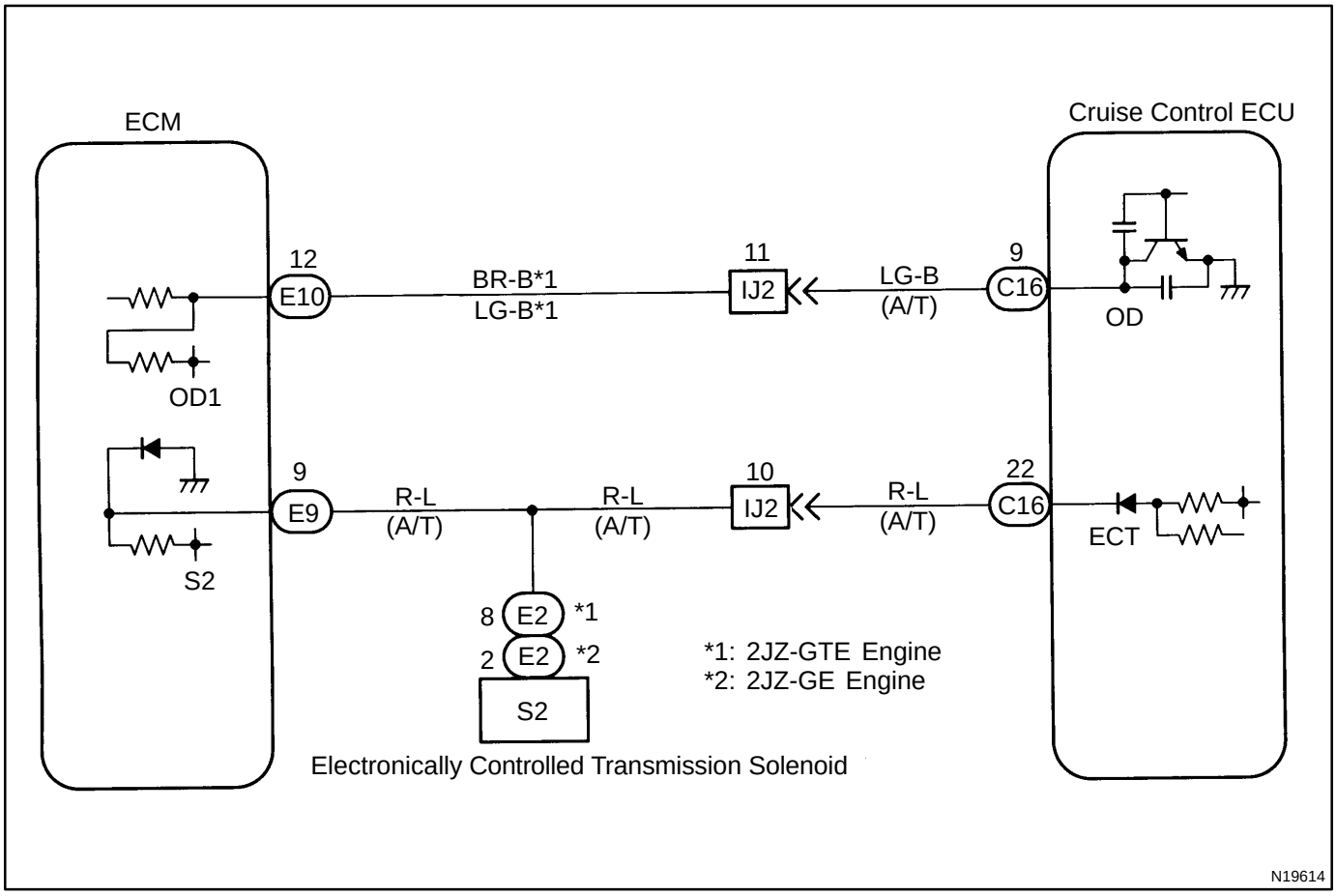

INSPECTION PROCEDURE

1	**Check operation of overdrive.**

PREPARATION:
Test drive after engine warms up.
CHECK:
Check that overdrive ON ↔ OFF occurs with operation of OD switch ON ↔ OFF.

NG → **Check and repair electronically controlled transmission (See page DI-371).**

OK

2	**Check voltage between terminal OD of harness side connector of cruise control ECU and body ground.**

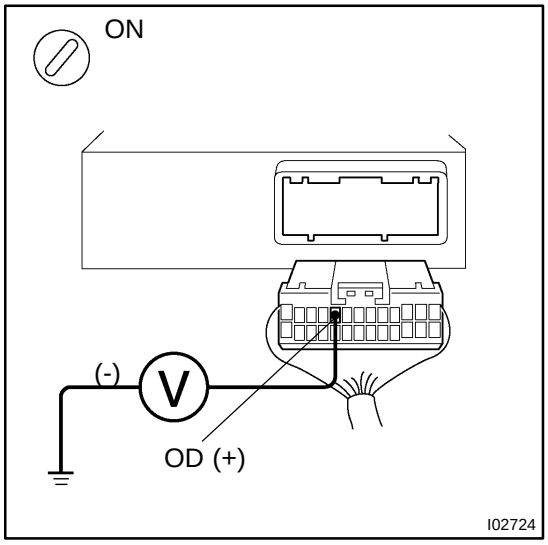

PREPARATION:
Remove cruise control ECU with connector still connected.
CHECK:
(a) Disconnect cruise control ECU connector.
(b) Turn ignition switch ON.
(c) Measure voltage between terminal OD of harness side connector of cruise control ECU and body ground.

OK:

Voltage: 10 - 14 V

NG → **Go to step 5.**

OK

3	**Check voltage between terminal ECT of cruise control ECU connector and body ground (On test drive).**

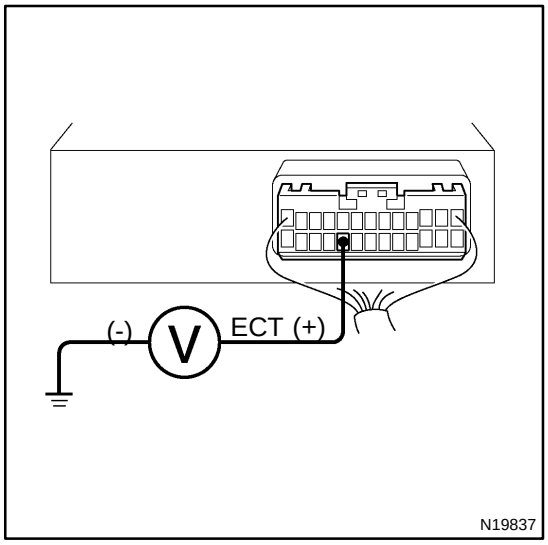

PREPARATION:

(a) Connect cruise control ECU connector.

(b) Test drive after engine warms up.

CHECK:

Check voltage between terminal ECT of cruise control ECU connector and body ground when OD switch is ON and OFF.

OK:

OD switch position	Voltage
ON	8 - 14 V
OFF	Below 0.5 V

OK → **Proceed to next circuit inspection shown on problem symptoms table (See page DI-671).**

NG

4	**Check harness and connector between terminal ECT of cruise control ECU and electronically controlled transmission solenoid (See page IN-28).**

NG → **Repair or replace harness or connector.**

OK

Check and replace cruise control ECU.

5	**Check harness and connector between terminal OD of cruise control ECU and terminal OD1 of ECM (See page IN-28).**

NG → **Repair or replace harness or connector.**

OK

Check and replace cruise control ECU (See page IN-28).

DI4XZ-01

Park/Neutral Position Switch Circuit

CIRCUIT DESCRIPTION

When the shift position is put in except D position, a signal is sent from the park/neutral position switch to the ECU. When this signal is input during cruise control driving, the ECU cancels the cruise control.

WIRING DIAGRAM

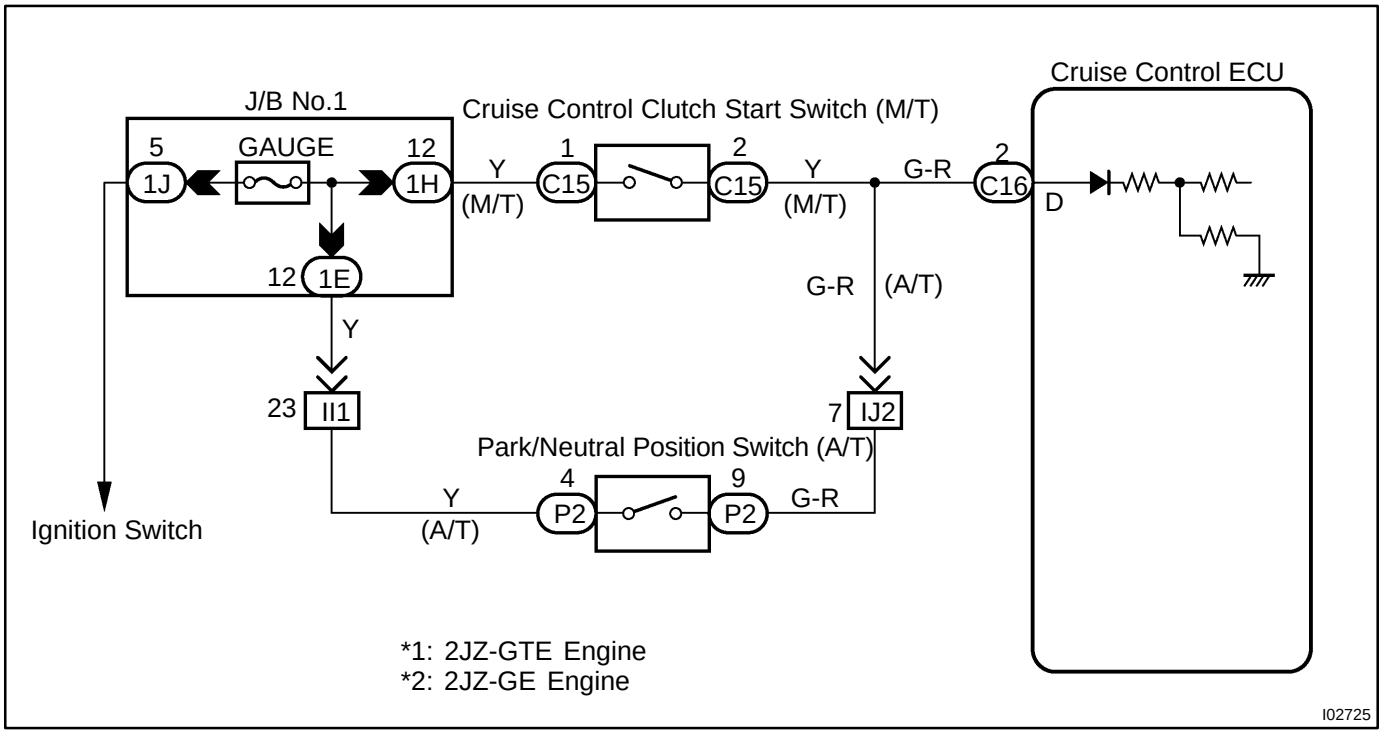

INSPECTION PROCEDURE

1	**Check starter operation.**

CHECK:

Check that the starter operates normally and that the engine starts.

NG → **Proceed to engine troubleshooting (2JZ-GE: See page DI-24 , 2JZ-GTE: See page DI-169).**

OK

2	Input signal check.

Input Signal	Indicator Light Blinking Pattern
Turn PNP switch OFF (Shift to except D range)	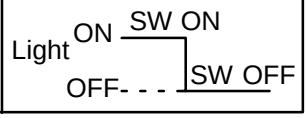

PREPARATION:

See input signal check on page DI-662 .

CHECK:

Check the indicator light when shifting into except D position.

OK:

The indicator light goes off when shifting into except D position.

OK	Proceed to next circuit inspection shown on problem symptoms table (See page DI-671).

NG

3	Check voltage between terminal D of cruise control ECU and body ground.

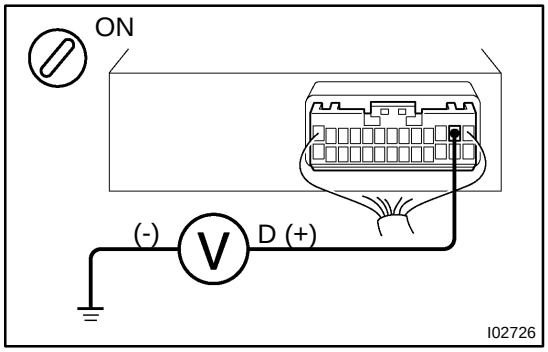

PREPARATION:

Turn ignition switch ON.

CHECK:

Measure voltage between terminal D of cruise control ECU connector and body ground when shifting into D position and other positions.

OK:

Shift Position	Voltage
D position	10 - 14 V
Other positions	Below 1 V

OK	Proceed to next circuit inspection shown on problem symptoms table (See page DI-671).

NG

4	**Check harness and connector between PNP switch and cruise control ECU (See page IN-28).**

NG → **Repair or replace harness or connector.**

OK

Check and replace cruise control ECU (See page IN-28).

DI4YO-01

Clutch Switch Circuit

CIRCUIT DESCRIPTION

When the clutch pedal is depressed, the clutch switch sends a signal to the cruise control ECU. When the signal is input to the cruise control ECU during cruise control driving, the cruise control ECU cancels cruise control.

WIRING DIAGRAM

Refer to park/neutral position switch circuit on page DI-694 .

INSPECTION PROCEDURE

1	**Check starter operation.**

CHECK:

Check that the starter operates normally and that the engine starts.

NG → **Proceed to engine troubleshooting (2JZ-GE: See page DI-24 , 2JZ-GTE: See page DI-169).**

OK

2	**Input signal check.**

Input Signal	Indicator Light Blinking Pattern
Clutch switch OFF (Depress clutch pedal)	

PREPARATION:

See input signal check on page DI-662 .

CHECK:

Check the indicator light when the clutch pedal is depressed.

OK:

The indicator light goes off when the clutch pedal is depressed.

OK → **Proceed to next circuit inspection shown on problem symptoms table (See page DI-671).**

NG

3	**Check voltage between terminal D of cruise control ECU and body ground.**

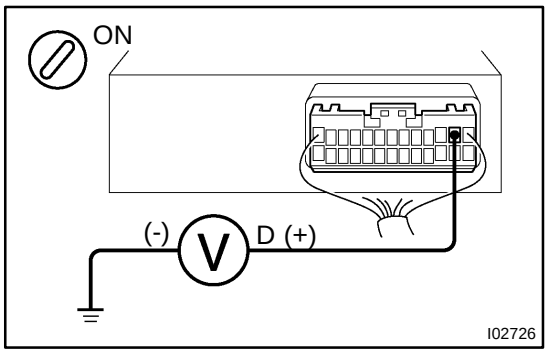

PREPARATION:
Turn ignition switch ON.
CHECK:
Measure voltage between terminal D of cruise control ECU connector and body ground when the clutch pedal is depressed.
OK:

Shift Position	Voltage
ON (Pedal depressed)	Below 1 V
OFF	10 - 14 V

OK → **Proceed to next circuit inspection shown on problem symptoms table (See page DI-671).**

NG

4	**Check for open in harness and connector between ECU and GAUGE fuse (See page IN-28).**

NG → **Repair or replace harness or connector.**

OK

Check and replace cruise control ECU (See page IN-28).

DI4Y1-01

ECU Power Source Circuit

CIRCUIT DESCRIPTION

The ECU power source supplies power to the actuator and sensors, etc.. When terminal GND and the cruise control ECU case are grounded.

WIRING DIAGRAM

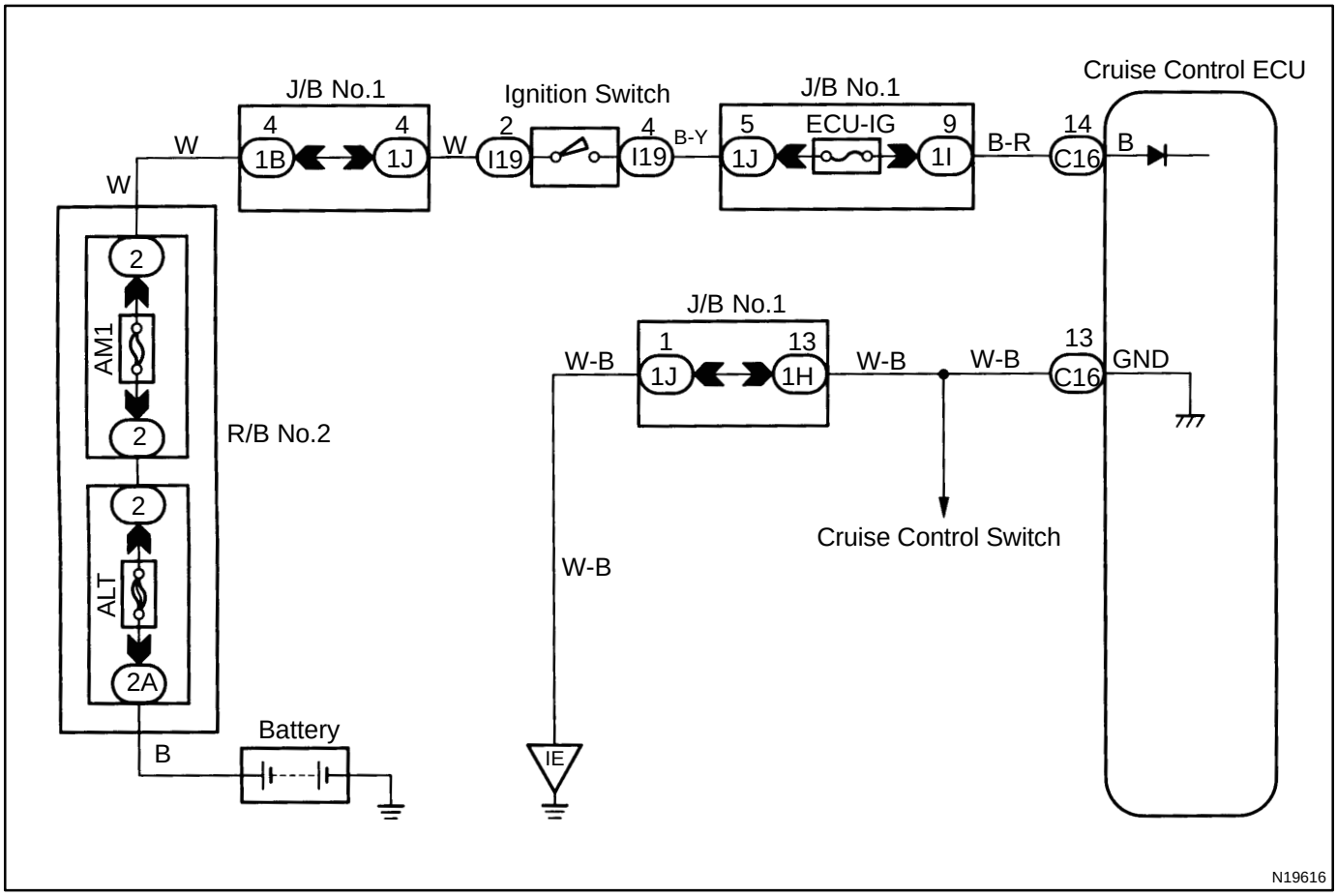

INSPECTION PROCEDURE

1	**Check ECU-IG fuse.**

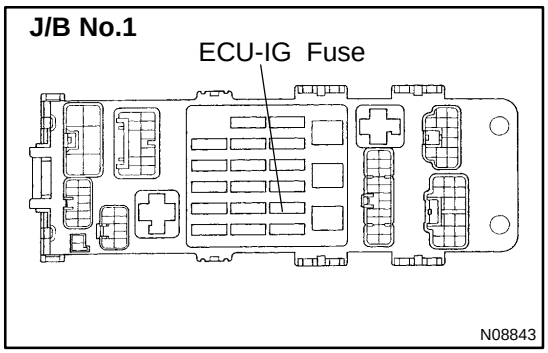

PREPARATION:
Remove ECU-IG fuse from junction block No.1.
CHECK:
Check continuity of ECU-IG fuse.
OK:
Continuity

NG → **Check for short in all the harness and components connected to ECU-IG fuse.**

OK

2	**Check voltage between terminals B and GND of cruise control ECU connector.**

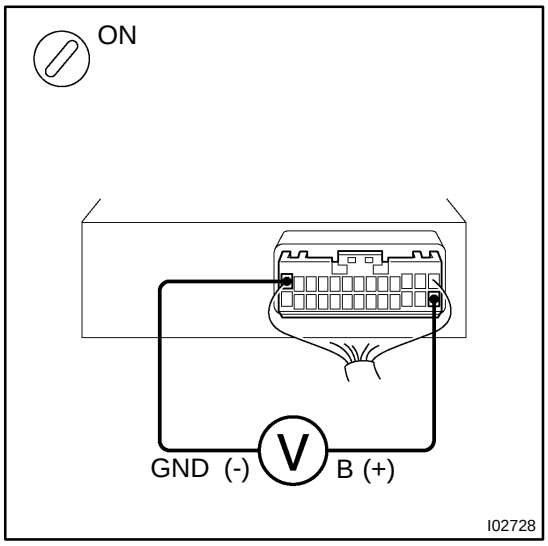

PREPARATION:
Remove cruise control ECU with connector still connected.
CHECK:
(a) Turn ignition switch ON.
(b) Measure voltage between terminals B and GND of cruise control ECU connector.
OK:
Voltage 10 - 14 V

OK → **Proceed to next circuit inspection shown on problem symptoms table (See page DI-671).**

NG

3	**Check resistance between terminal GND of cruise control ECU connector and body ground (See page IN-28).**

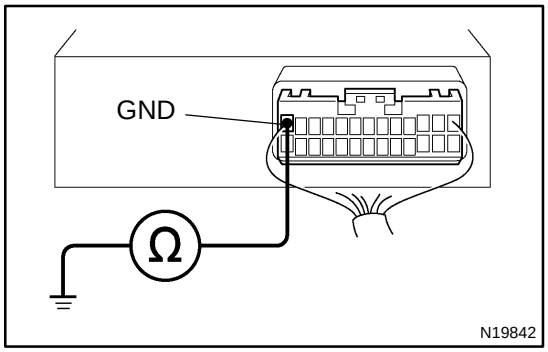

CHECK:

Measure resistance between terminal GND of cruise control ECU connector and body ground.

OK:

Resistance: Below 1 Ω

NG → **Repair or replace harness or connector.**

OK

Check and repair harness and connector between battery and cruise control ECU (See page IN-28).

DI4Y2-01

Back-up Power Source Circuit

CIRCUIT DESCRIPTION

The ECU back-up power source provides power even when the ignition is off and is used for DTC memory, etc..

WIRING DIAGRAM

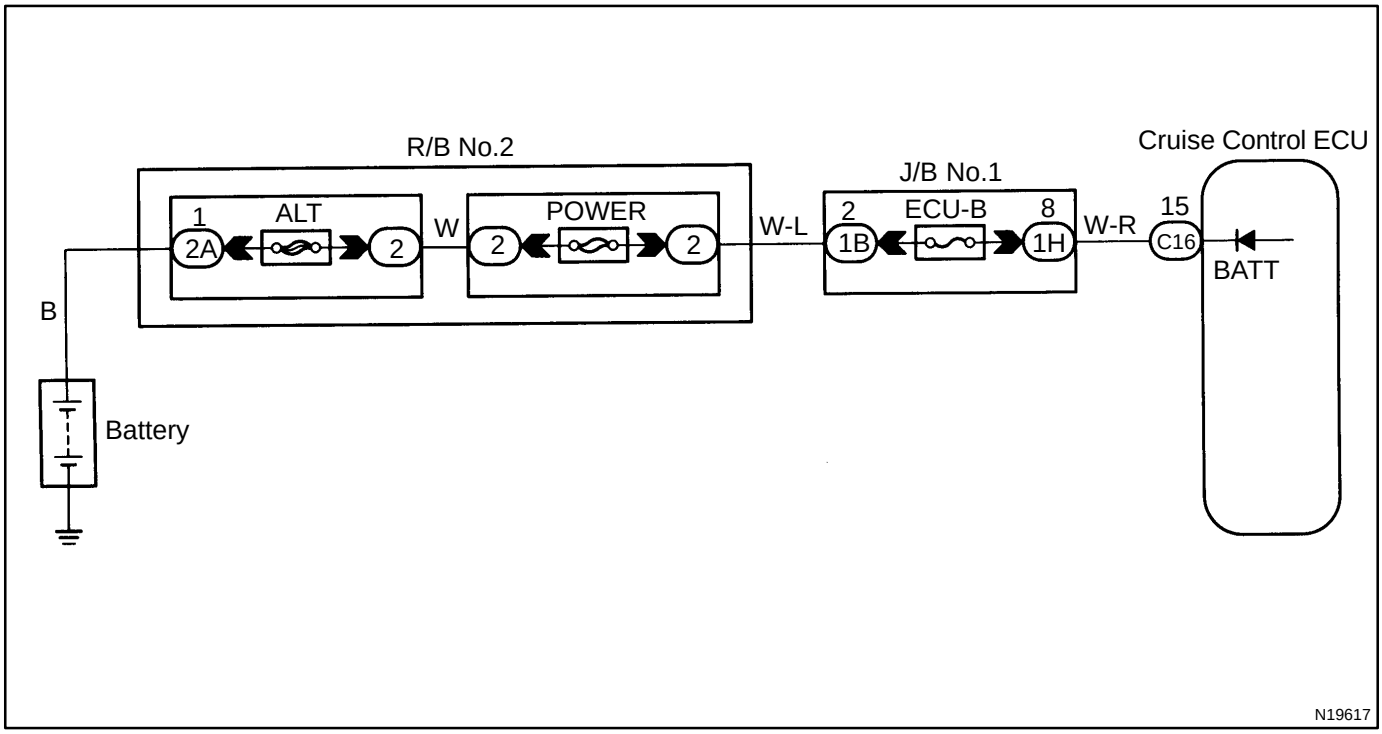

INSPECTION PROCEDURE

1	Check DOME fuse.

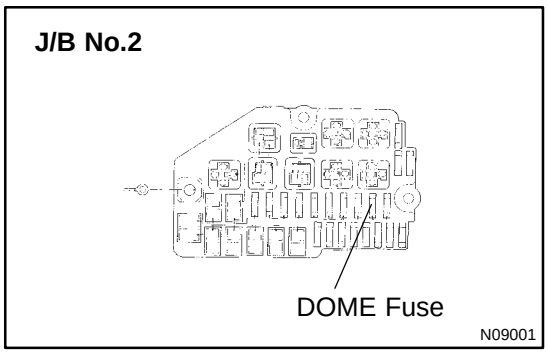

PREPARATION:
Remove DOME fuse from relay block No.2.
CHECK:
Check continuity of DOME fuse.
OK:
Continuity

NG → **Check for short in all the harness and components connected to the DOME fuse.**

OK

2	Check voltage between terminal BATT of cruise control ECU connector and body ground (See page IN-28).

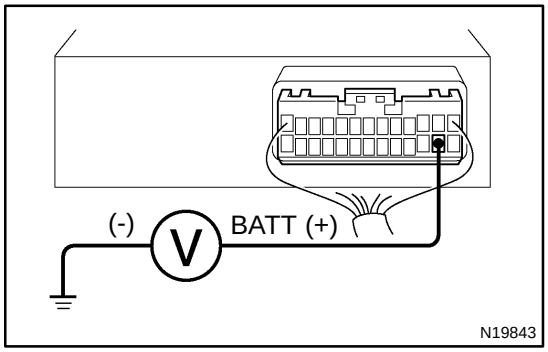

PREPARATION:
Remove cruise control ECU with connector still connected.
CHECK:
Measure voltage between terminal BATT of cruise control ECU connector and body ground.
OK:
Voltage: 10 - 14 V

OK → **Proceed to next circuit inspection shown on problem symptoms table (See page DI-671).**

NG

Check and repair harness and connector between battery and cruise control ECU (See page IN-28).

DI4Y3-01

Main Switch Circuit (Cruise Control Switch)

CIRCUIT DESCRIPTION

When the cruise control main switch is turned off, the cruise control does not operate.

WIRING DIAGRAM

See page DI-682 .

INSPECTION PROCEDURE

1	**Check voltage between terminal CMS of cruise control ECU connector and body ground.**

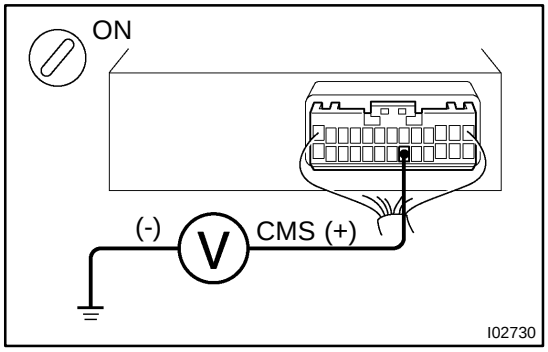

PREPARATION:

Remove cruise control ECU with connector still connected.

CHECK:

(a) Turn ignition switch ON.

(b) Measure voltage between terminal CMS of cruise control ECU connector when main switch is held on and off.

OK:

Main switch	Voltage
OFF	10 - 14 V
ON	Below 1 V

OK

Proceed to next circuit inspection shown on problem symptoms table (See page DI-671).

NG

2	Check main switch continuity.

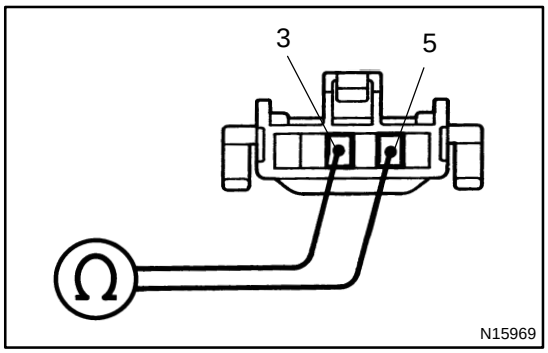

PREPARATION:

(a) Remove steering wheel center pad (See page SR-1 1).

(b) Disconnect cruise control switch connector.

CHECK:

Check continuity between terminals 3 and 5 of cruise control switch connector when main switch is held on and off.

OK:

Switch position	Tester connection	Specified condition
OFF	3 - 5	No continuity
Hold ON	3 - 5	Continuity

NG → **Replace control switch.**

OK

3	Check harness and connector between cruise control ECU and main switch (See page IN-28).

NG → **Repair or replace harness or connector.**

OK

Check and replace cruise control ECU (See page IN-28).

DI4Y4-01

CRUISE MAIN Indicator Light Circuit

CIRCUIT DESCRIPTION

When the cruise control main switch is turned ON, CRUISE MAIN indicator light lights up.

WIRING DIAGRAM

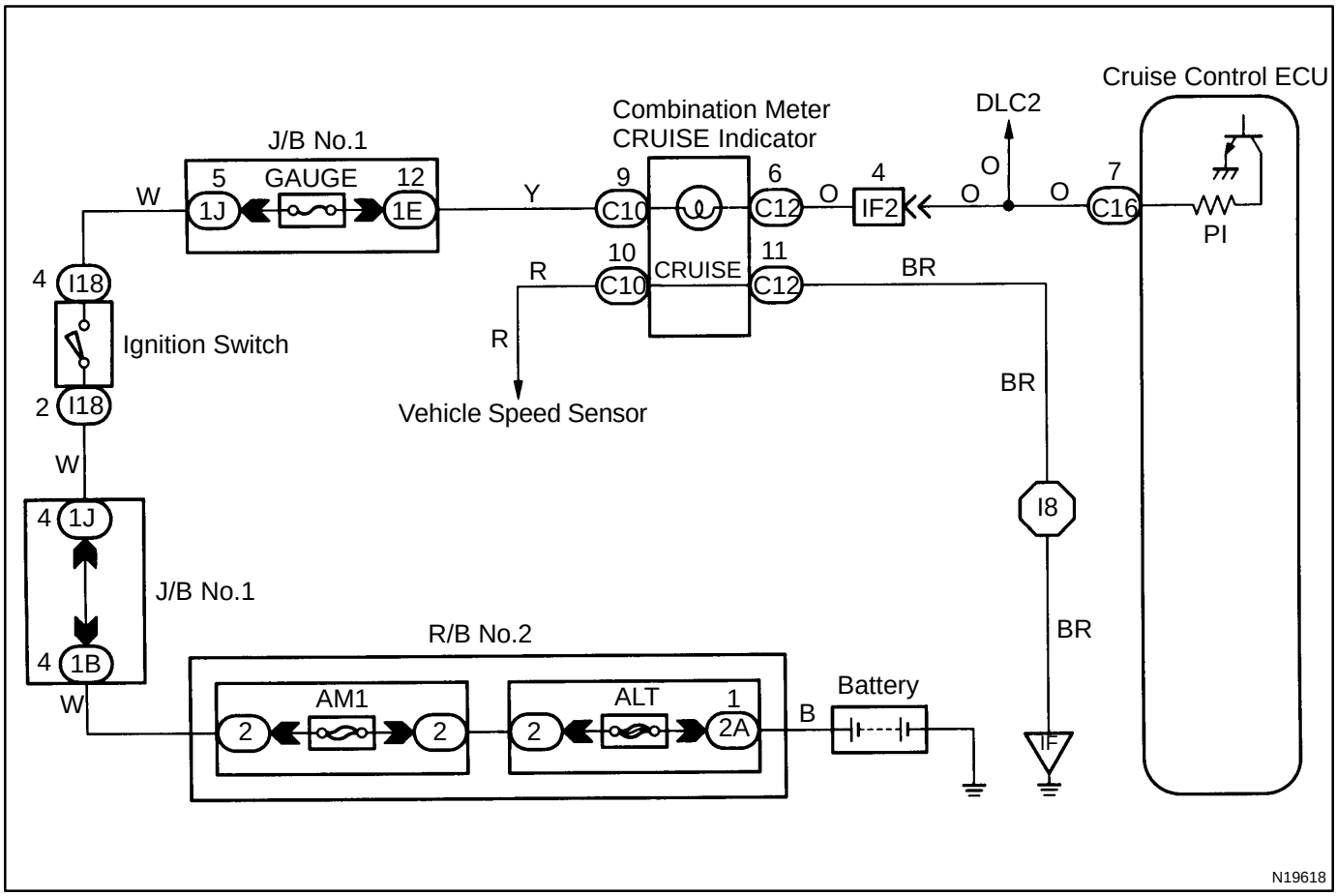

INSPECTION PROCEDURE

1	**Check voltage between terminals PI and GND of cruise control ECU connector.**

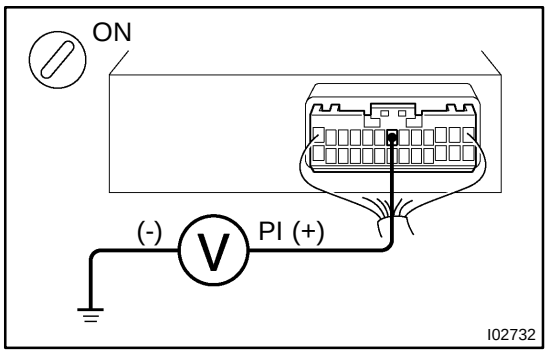

PREPARATION:
Ignition switch ON.
CHECK:
Measure voltage between terminals PI and GND of cruise control ECU connector when main switch on and off.
OK:

Switch position	Voltage
OFF	10 - 16 V
ON	Below 1.2 V

OK → **Proceed to next circuit inspection shown on problem symptoms table (See page DI-671).**

NG

2	**Check combination meter (See page BE-43).**

NG → **Replace combination meter.**

OK

Check and replace cruise control ECU (See page IN-28).

DI4Y5-01

Diagnosis Circuit

CIRCUIT DESCRIPTION

This circuit sends a signal to the ECU that DTC output is required.

WIRING DIAGRAM

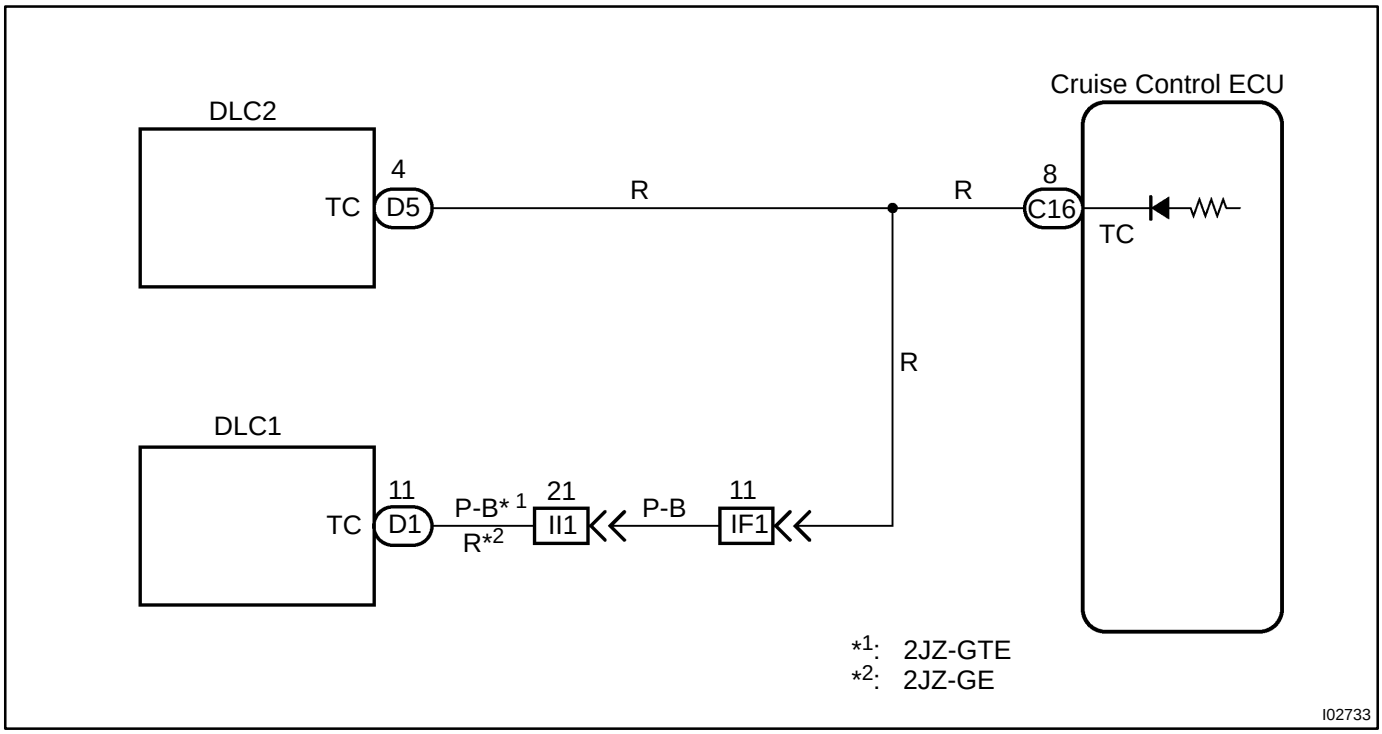

INSPECTION PROCEDURE

1	**Check voltage between terminals Tc and E_1 of DLC2.**

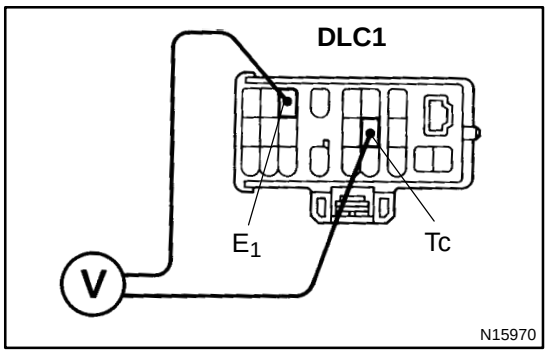

CHECK:

(a) Turn ignition switch ON.

(b) Measure voltage between terminals Tc and E_1 of DLC2.

OK:

Voltage: 10 - 14 V

OK → **Proceed to next circuit inspection shown on problem symptoms table (See page DI-671).**

NG

2	**Check harness and connector between cruise control ECU and DLC2, DLC2 and body ground (See page IN-28).**

NG → **Repair or replace harness or connector.**

OK

Check and replace cruise control ECU (See page IN-28).

A INTRODUCTION

This manual consists of the following 11 sections:

No.	Section	Description
A	INDEX	Index of the contents of this manual.
	INTRODUCTION	Brief explanation of each section.
B	HOW TO USE THIS MANUAL	Instructions on how to use this manual.
C	TROUBLE-SHOOTING	Describes the basic inspection procedures for electrical circuits.
D	ABBREVIATIONS	Defines the abbreviations used in this manual.
E	GLOSSARY OF TERMS AND SYMBOLS	Defines the symbols and functions of major parts.
F	RELAY LOCATIONS	Shows position of the Electronic Control Unit, Relays, Relay Block, etc. This section is closely related to the system circuit.
G	ELECTRICAL WIRING ROUTING	Describes position of Parts Connectors, Splice points, Ground points, etc. This section is closely related to the system circuit.
H	POWER SOURCE (Current Flow Chart)	Describes power distribution from the power supply to various electrical loads.
I	INDEX	Index of the system circuits.
	SYSTEM CIRCUITS	Electrical circuits of each system are shown from the power supply through ground points. Wiring connections and their positions are shown and classified by code according to the connection method. (Refer to the section, “How to use this manual”). The “System Outline” and “Service Hints” useful for troubleshooting are also contained in this section.
J	GROUND POINTS	Shows ground positions of all the parts described in this manual.
K	OVERALL ELECTRICAL WIRING DIAGRAM	Provides circuit diagrams showing the circuit connections.

This manual provides information on the electrical circuits installed on vehicles by dividing them into a circuit for each system.

The actual wiring of each system circuit is shown from the point where the power source is received from the battery as far as each ground point. (All circuit diagrams are shown with the switches in the OFF position.)

When troubleshooting any problem, first understand the operation of the circuit where the problem was detected (see System Circuit section), the power source supplying power to that circuit (see Power Source section), and the ground points (see Ground Points section). See the System Outline to understand the circuit operation.

When the circuit operation is understood, begin troubleshooting of the problem circuit to isolate the cause. Use Relay Location and Electrical Wiring Routing sections to find each part, junction block and wiring harness connectors, wiring harness and wiring harness connectors, splice points, and ground points of each system circuit. Internal wiring for each junction block is also provided for better understanding of connection within a junction block.
Wiring related to each system is indicated in each system circuit by arrows (from__,to__). When overall connections are required, see the Overall Electrical Wiring Diagram at the end of this manual.

* The system shown here is an EXAMPLE ONLY. It is different to the actual circuit shown in the SYSTEM CIRCUITS SECTION.

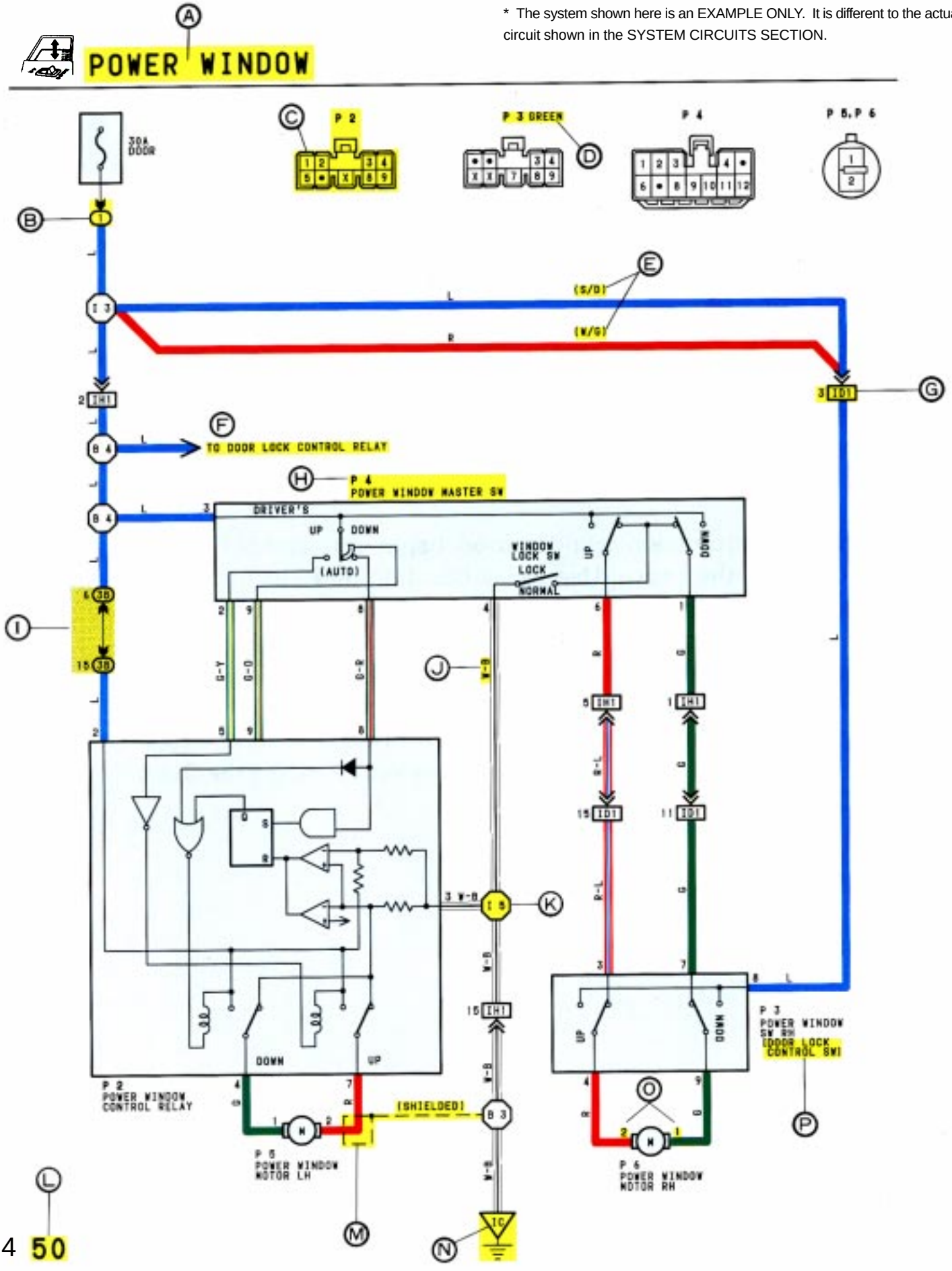

A : System Title

B : Indicates a Relay Block. No shading is used and only the Relay Block No. is shown to distinguish it from the J/B.

Example: (1) Indicates Relay Block No. 1.

C : Indicates the connector to be connected to a part (the numeral indicates the pin No.)
Explanation of pin use.

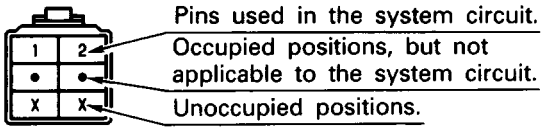

The pins shown are only for the highest grade, or only include those in the specification.

D : Connector Color Connectors not indicated are milky white in color:

E : ( ) is used to indicate different wiring and connector, etc. when the vehicle model, engine type, or specification is different.

F : Indicates related system.

G : Indicates the wiring harness and wiring harness connector. The wiring harness with male terminal is shown with arrows (⩛).

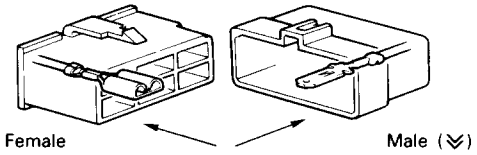

The first letter of the code for each wiring harness and wiring harness connector(s) indicates thecomponent's location, e.g, "E" for the Engine Compartment, "I" for the Instrument Panel and Surrounding area, and "B" for the Body and Surrounding area.

When more than one code has the first and second letters in common, followed by numbers (e.g, IH1, IH2), this indicates the same type of wiring harness and wiring harness connector.

H : Represents a part (all parts are shown in sky blue). The code is the same as the code used in parts position.

I : Junction Block (The number in the circle is the J/B No. and the connector code is shown beside it). Junction Blocks are shaded to clearly separate them from other parts .

Example:

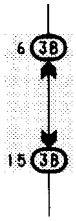

3B indicates that it is inside Junction Block No. 3.

J : Indicates the wiring color.
Wire colors are indicated by an alphabetical code.

B = Black	L = Black	R = Red
BR = Brown	LG = Light Green	V = Violet
G = Green	O = Orange	W = White
GR = Gray	P = Pink	Y = Yellow

The first letter indicates the basic wire color and the second letter indicates the color of the stripe.

Example: L - Y

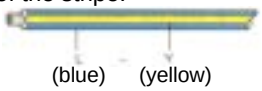

K : Indicates a wiring Splice Point (Codes are "E" for the Engine Room, "I" for the Instrument Panel, and "B" for the Body).

Example:

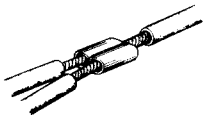

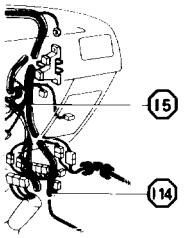

The Location of Splice Point I 5 is indicated by the shaded section.

L : Page No.

M : Indicates a shielded cable.



N : Indicates a ground point.

The first letter of the code for each ground point(s) indicates the component's location, e.g. "E" for the Engine Compartment, "I" for the Instrument Panel and Surrounding area, and "B" for the Body and Surrounding area.

O : Indicates the pin number of the connector.
The numbering system is different for female and male connectors.

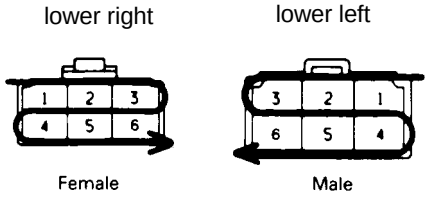

P : When 2 parts both use one connector in common, the parts connector name used in the wire routing section is shown in square brackets [ ].

Q

SYSTEM OUTLINE

WITH THE IGNITION SW TURNED ON, THE CURRENT FLOWS TO **TERMINAL 3** OF THE POWER WINDOW MASTER SW, **TERMINAL 2** OF THE POWER WINDOW CONTROL RELAY AND **TERMINAL 8** OF THE POWER WINDOW SW THROUGH THE **DOOR** FUSE.

1. DRIVER'S WINDOW "MANUAL UP" OPERATION BY MASTER SW

HOLDING MANUAL SW (DRIVER'S) ON "UP" POSITION LOCATED IN POWER WINDOW MASTER SW, THE CURRENT FLOWS TO **TERMINAL 5** OF THE POWER WINDOW CONTROL RELAY THROUGH **TERMINAL 3** OF THE MASTER SW ➔ **TERMINAL 2** TO OPERATE A POWER WINDOW CONTROL RELAY. THUS THE CURRENT INSIDE THE RELAY FLOWS FROM **TERMINAL 2** OF THE RELAY ➔ **TERMINAL 1** ➔ **TERMINAL 2** OF THE POWER WINDOW MOTOR ➔ **TERMINAL 1** ➔ **TERMINAL 4** OF THE RELAY ➔ **TERMINAL 3** ➔ TO **GROUND**. THE MOTOR TURNS TO ASCENT THE WINDOW. RELEASING THIS SW, THE ROTATION OF MOTOR IS STOPPED AND THE WINDOWS CAN STOP AT WILL POINT.

(FOR THE "MANUAL DOWN" OPERATION, CURRENT FLOWS IN THE REVERSE DIRECTION BECAUSE THE TERMINALS WHERE IT FLOW ARE CHANGED).

2. DRIVER'S WINDOW "AUTO DOWN" OPERATION BY MASTER SW

ONCE THE "AUTO DOWN" BUTTON OF THE MASTER SW IS PUSHED, THE CURRENT FLOW **TERMINAL 9** OF THE POWER WINDOW CONTROL RELAY THROUGH **TERMINAL 3** OF THE MASTER SW➔ **TERMINALS 8** AND **9** TO OPERATE THE RELAY. THUS THE CURRENT INSIDE THE POWER WINDOW CONTROL RELAY FLOWS FROM **TERMINAL 2** OF THE RELAY ➔ **TERMINAL 4** ➔ **TERMINAL 1** OF THE POWER WINDOW MOTOR ➔ **TERMINAL 2** ➔ **TERMINAL 1** OF THE RELAY ➔ **TERMINAL 3** ➔ TO **GROUND**. THE MOTOR CONTINUES THE ROTATION ENABLING TO DESCENT THE WINDOW.

THE WINDOW DESCENDS TO THE END POSITION. THE CURRENT WILL BE CUT OFF TO RELEASE THE AUTO DOWN FUNCTION BASED ON THE INCREASING CURRENT BETWEEN **TERMINAL 2** OF THE RELAY AND **TERMINAL 1** IN RELAY.

3. DRIVER'S WINDOW AUTO DOWN RELEASE OPERATION BY MASTER SW

HOLDING THE MANUAL SW (DRIVER'S) ON "UP" POSITION IN OPERATING AUTO DOWN. THE CURRENT FROM **TERMINAL 3** OF THE MASTER SW PASSING **TERMINAL 2** FLOWS **TERMINAL 5** OF THE RELAY AND RELEASES THE AUTO DOWN FUNCTION IN THE POWER WINDOW CONTROL RELAY. RELEASING THE HAND FROM SW, WINDOW STOPS AND CONTINUING ON TOUCHING SW. THE FUNCTION SWITCHES TO MANUAL UP OPERATION.

4. PASSENGER'S WINDOW UP OPERATION (MASTER SW) AND WINDOW LOCK SW OPERATION

HOLDING PASSENGER'S WINDOW SW (MASTER SW) ON "UP", THE CURRENT FLOWS FROM **TERMINAL 3** OF THE MASTER SW PASSING **TERMINAL 6** TO **TERMINAL 3** OF THE POWER WINDOW SW (PASSENGER'S) ➔ **TERMINAL 4 TERMINAL** ➔ **2** OF THE MOTOR ➔ **TERMINAL 1** ➔ **TERMINAL 9** OF THE POWER WINDOW SW ➔ **TERMINAL 7** ➔ **TERMINAL 1** OF THE MASTER SW ➔ **TERMINAL 4** TO **GROUND**. THE MOTOR RUNS TO ASCENT THE WINDOW. RELEASING THIS SW, THE ROTATION OF MOTOR IS STOPPED AND WINDOW CAN STOP AT WILL PLACE. SWITCHING THE WINDOW LOCK SW IN "LOCK" POSITION, THE CIRCUIT IS OPENED AND STOPPED THE MOTOR ROTATION.

R (FOR THE DOWN OPERATION, CURRENT FLOWS IN THE REVERSE DIRECTION BECAUSE THE TERMINALS WHERE IT FLOWS ARE CHANGED).

SERVICE HINTS

P 2 POWER WINDOW CONTROL RELAY

3-GROUND: ALWAYS CONTINUITY

2-GROUND: APPROX. 12 VOLTS WITH THE IGNITION SW AT **ON** POSITION

5-GROUND: APPROX. 12 VOLTS WITH THE IGNITION SW AT **ON** POSITION AND THE MASTER SW AT **UP** POSITION

8-GROUND: APPROX. 12 VOLTS WITH THE IGNITION SW AT **ON** POSITION AND THE MASTER SW AT **AUTO DOWN** POSITION

9-GROUND: APPROX. 12 VOLTS WITH THE IGNITION SW AT **ON** POSITION AND THE MASTER SW AT **DOWN** OR **AUTO DOWN** POSITION

P 4 POWER WINDOW MASTER SW

4-GROUND: ALWAYS CONTINUITY

3-GROUND: APPROX. 12 VOLTS WITH THE IGNITION SW AT **ON** POSITION

WINDOW LOCK SW

OPEN WITH THE WINDOW LOCK SW AT **LOCK** POSITION

S

: PARTS LOCATION

CODE	SEE PAGE	CODE	SEE PAGE	CODE	SEE PAGE
P2	21	**P4**	21	**P6**	21
P3	21	**P5**	21		

T

: RELAY BLOCKS

CODE	SEE PAGE	RELAY BLOCK (RELAY BLOCK LOCATION)
1	16	R/B NO. 1 (INSTRUMENT PANEL LEFT)

U

: JUNCTION BLOCK AND WIRE HARNESS CONNECTOR

CODE	SEE PAGE	JUNCTION BLOCK AND WIRE HARNESS (CONNECTOR LOCATION)
38	14	J/B NO. 3 AND COWL WIRE (INSTRUMENT PANEL LEFT SIDE)

V

: CONNECTOR JOINING WIRE HARNESS AND WIRE HARNESS

CODE	SEE PAGE	JOINING WIRE HARNESS AND WIRE HARNESS (CONNECTOR LOCATION)
ID1	26	FRONT DOOR RH WIRE AND COWL WIRE (RIGHT KICK PANEL)
IH1	26	FRONT DOOR LH WIRE AND COWL WIRE (LEFT KICK PANEL)

W

: GROUND POINTS

CODE	SEE PAGE	GROUND POINT LOCATION
IC	24	COWL LEFT

X

: SPLICE POINTS

CODE	SEE PAGE	WIRE HARNESS WITH SPLICE POINTS	CODE	SEE PAGE	WIRE HARNESS WITH SPLICE POINTS
I 5	24	COWL WIRE			

Ⓠ: Explains the system outline.

Ⓡ: Indicates values or explain the function for reference during troubleshooting.

Ⓢ: Indicates the reference page showing the position on the vehicle of the parts in the system circuit.

Example: Part “P 4” (Power Window Master SW) is on page 21 of the manual.

* The letter in the code is from the first letter of the part, and the number indicates its order in parts starting with the letter.

Example: P 4

- 4 → Part is 4th in order
- P → Power Window Master SW

Ⓣ: Indicates the reference page showing the position on the vehicle of Relay Block Connectors in the system circuit.

Example: Connector “1” is described on page 16 on this manual and is installed on the left side of the instrument panel.

Ⓤ: Indicates the reference page showing the position on the vehicle of J/B and Wire Harness in the system circuit.

Example: Connector “3B”connects the Cowl Wire and J/B No. 3. It is described on page 14 of this manual, and is installed on the instrument panel left side.

Ⓥ: Indicates the reference page describing the wiring harness and wiring harness connector (the female wiring harness is shown first, followed by the male wiring harness).

Example: Connector “ID1”connects the front door RH wire (female) and cowl wire (male). It is described on page 26 of this manual, and is installed on the right side kick panel.

Ⓦ: Indicates the reference page showing the position of the ground points on the vehicle.

Example: Ground point “IC” is described on page 24 of this manual and is installed on the cowl left side.

Ⓧ: Indicates the reference page showing the position of the splice points on the vehicle.

Example: Splice point “I 5” is on the Cowl Wire Harness and is described on page 24 of this manual.

HINTS:

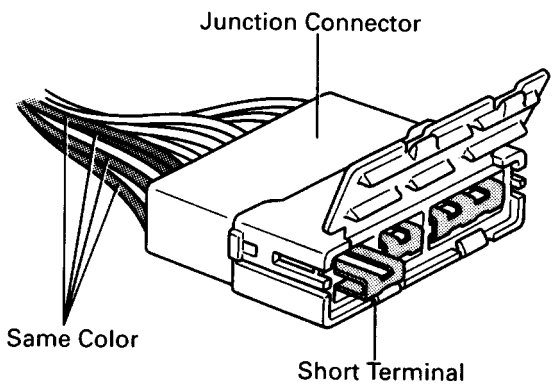

Junction connector (code: J1 to J19) in this manual include a short terminal which is connected to a number of wire harnesses. Always perform inspection with the short terminal installed. (When installing the wire harnesses, the harnesses can be connected to any position within the short terminal grouping. Accordingly, in other vehicles, the same position in the short terminal may be connected to a wire harness from a different part.)
Wire harness sharing the same short terminal grouping have the same color.

B HOW TO USE THIS MANUAL

The “Current Flow Chart” section, describes which parts each power source (fuses, fusible links, and circuit breakers) transmits current to. In the Power Source circuit diagram, the conditions when battery power is supplied to each system are explained. Since all System Circuit diagrams start from the power source, the power source system must be fully understood.

H POWER SOURCE (CURRENT FLOW CHART)

The chart below shows the route by which current flows from the battery to each electrical source (Fusible Link, Circuit Breaker, Fuse, etc.) and other parts.

The next page and following pages shown the parts to which each electrical source outputs current.

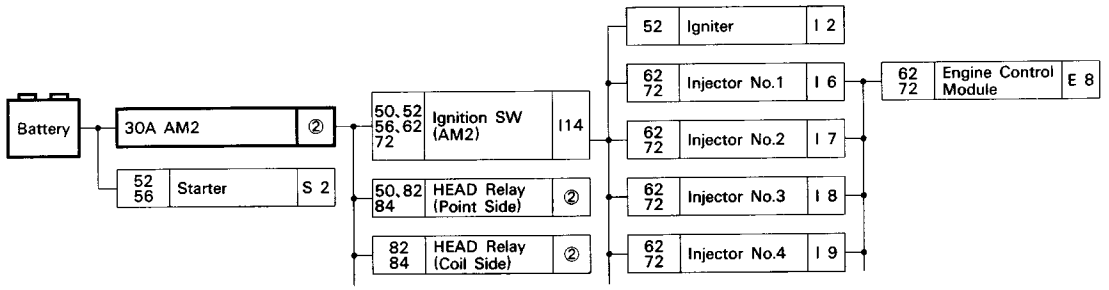

Page Nos. of Related Systems	120	132 138	166	120	120 132 138	120	174	90 174	138	127	90	166 168	98	170	98	164	90	62 72	164
Parts	ABS Actuator	ABS Relay	ADD Indicator SW	Auto Antenna Motor	ABS Deceleration Sensor	ABS ECU	A/C Amplifier	A/C Dual Pressure SW	A/C SW	ADD Control Relay	Airbag Sencor Assembly	Ashtray Illumination	Auto Antenna Control Relay	Back-Up Light SW	Brake Fluid Level Warning SW	Back-Up Light Relay	Cigarette Lighter	Cigarette Lighter Illumination	Circuit Opening Relay	Clock
Code or Location	A 2	A 3	A 4	A 6	A 8	A 9	A10	A11	A12	A13	A14	A16	A17	A19	A20	B 1	B 2	B 3	C 4	C 5	C 6	C 7
Location CB or Fuse																						
15A ECU-B							●						●									
10A GAUGE	●		●	●			●	●							●	●	●	●				
10A TURN																						
① 15A ECU-IG						●	●															

POWER SOURCE

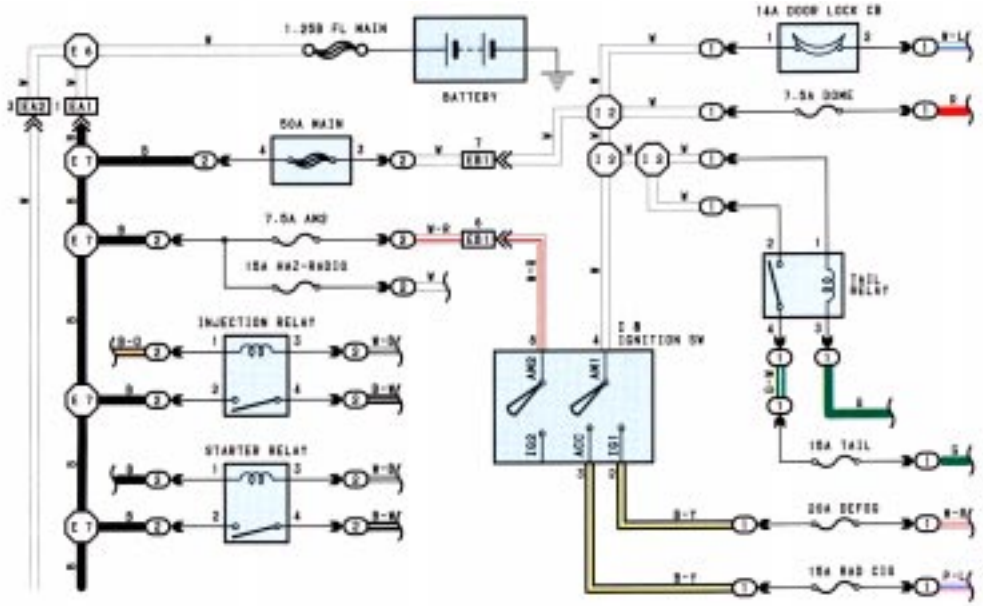

* The system shown here is an EXAMPLE ONLY. It is different to the actual circuit shown in the SYSTEM CIRCUITS SECTION.

The ground points circuit diagram shows the connections from all major parts to the respective ground points. When troubleshooting a faulty ground point, checking the system circuits which use a common ground may help you identify the problem ground quickly. The relationship between ground points (EA, IB and IC shown below) can also be checked this way.

J GROUND POINT

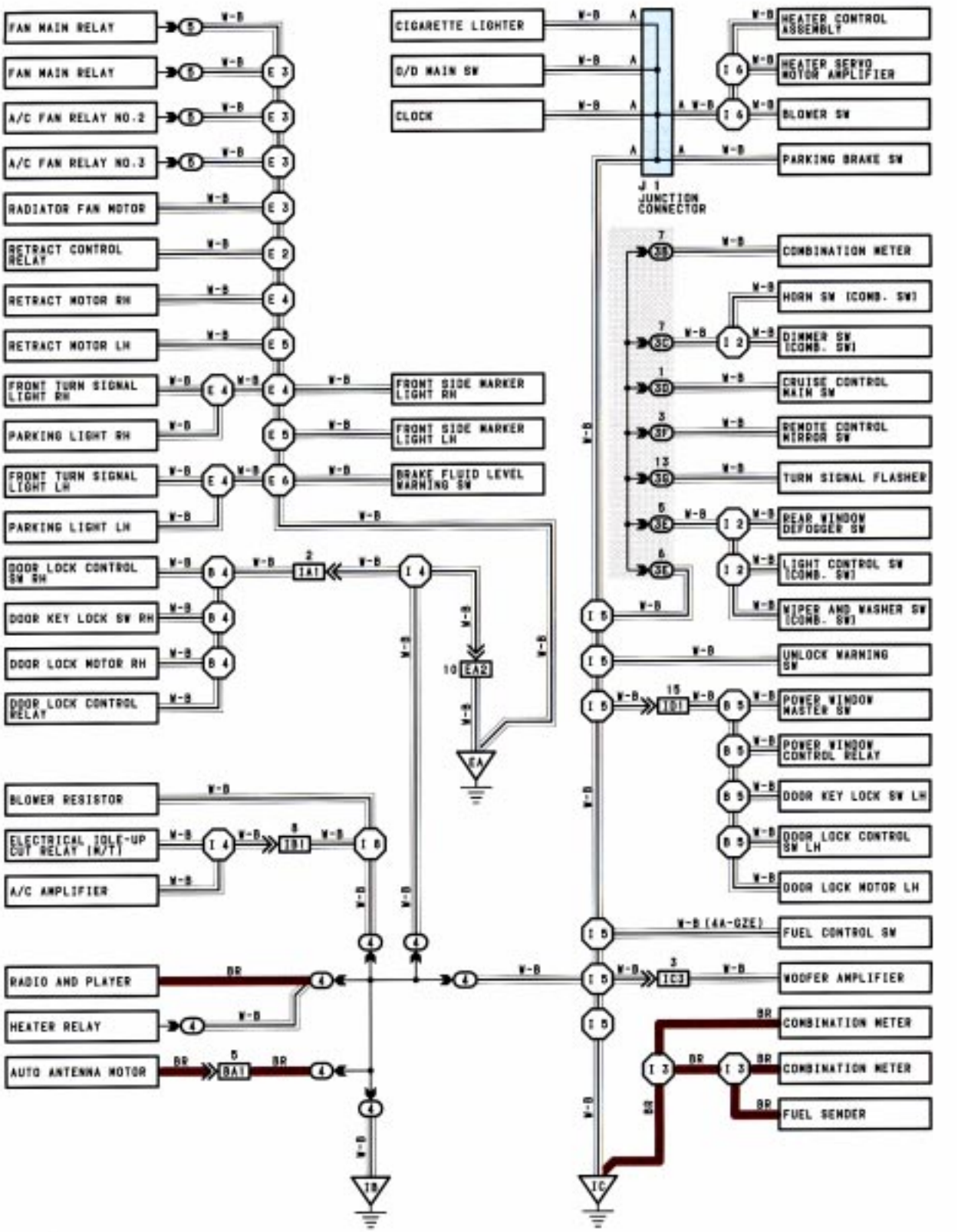

* The system shown here is an EXAMPLE ONLY. It is different to the actual circuit shown in the SYSTEM CIRCUITS SECTION.

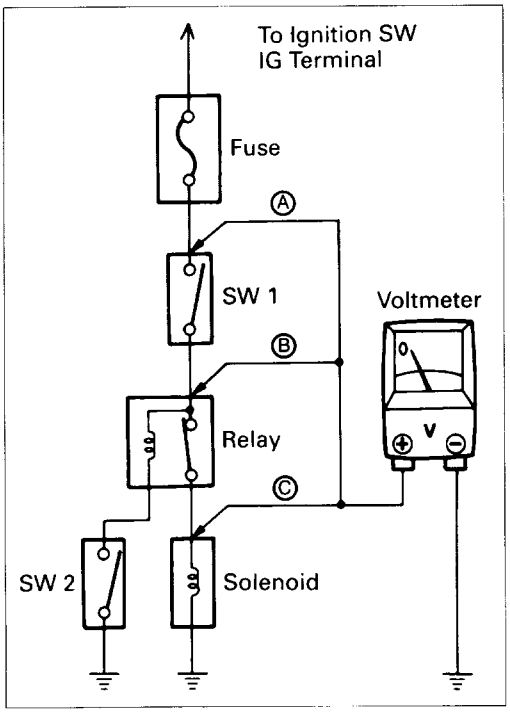

VOLTAGE CHECK

(a) Establish conditions in which voltage is present at the check point.

Example:

Ⓐ - Ignition SW on
Ⓑ - Ignition SW and SW 1 on
Ⓒ - Ignition SW, SW 1 and Relay on (SW2 off)

(b) Using a voltmeter, connect the negative lead to a good ground point or negative battery terminal, and the positive lead to the connector or component terminal. This check can be done with a test light instead of a voltmeter.

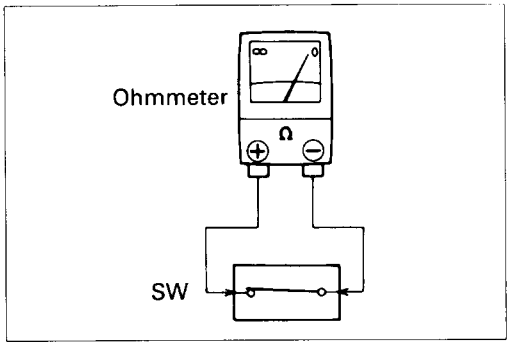

CONTINUITY AND RESISTANCE CHECK

(a) Disconnect the battery terminal or wire so there is no voltage between the check points.

(b) Contact the two leads of an ohmmeter to each of the check point.

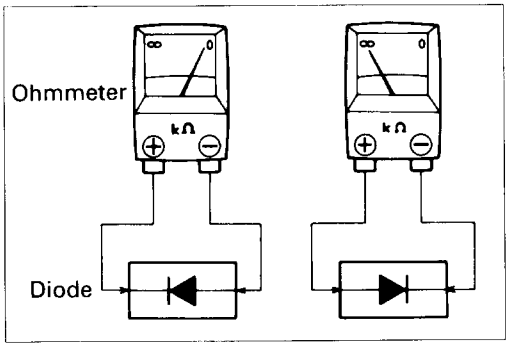

If the circuit has diodes, reverse the two leads and check again.
When contacting the negative lead to the diode positive side and the positive lead to the negative side, there should be continuity.
When contacting the two leads in reverse, there should be no continuity.

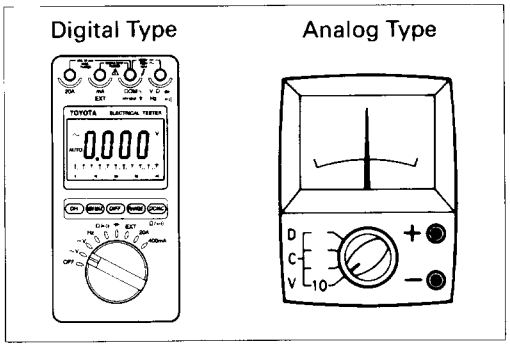

(c) Use the volt/ohmmeter with high impedance (10 kΩ/V minimum) for troubleshooting of the electrical circuit.

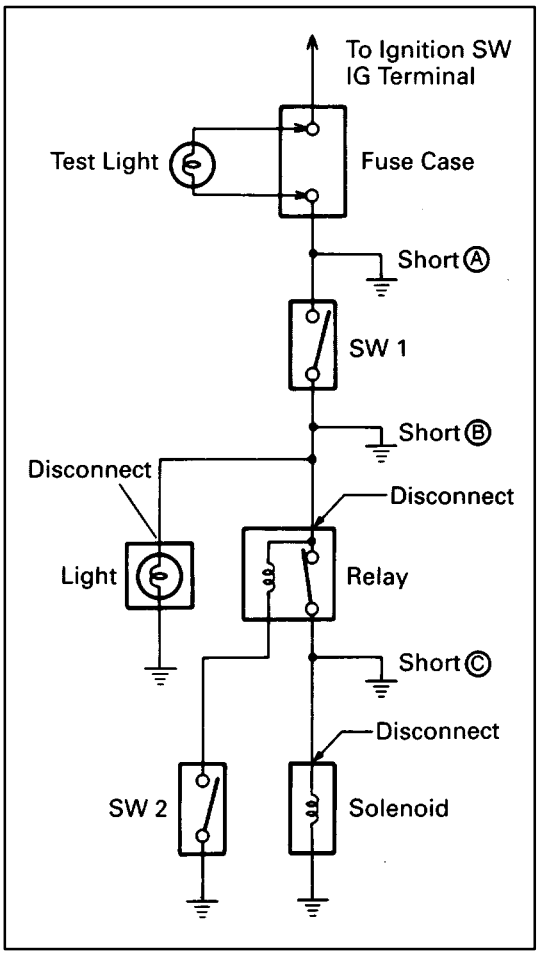

FINDING A SHORT CIRCUIT

(a) Remove the blown fuse and disconnect all loads of the fuse.
(b) Connect a test light in place of the fuse.
(c) Establish conditions in which the test light comes on.

Example:
Ⓐ - Ignition SW on
Ⓑ - Ignition SW and SW 1 on
Ⓒ - Ignition SW, SW 1 and Relay on (Connect the Relay) and SW 2 off (or Disconnect SW 2)

(d) Disconnect and reconnect the connectors while watching the test light.
The short lies between the connector where the test light stays lit and the connector where the light goes out.

(e) Find the exact location of the short by lightly shaking the problem wire along the body.

CAUTION:

(a) Do not open the cover or the case of the ECU unless absolutely necessary. (If the IC terminals are touched, the IC may be destroyed by static electricity.)
(b) When replacing the internal mechanism (ECU part) of the digital meter, be careful that no part of your body or clothing comes in contact with the terminals of leads from the IC, etc. of the replacement part (spare part).

DISCONNECTION OF MALE AND FEMALE CONNECTORS

To pull apart the connectors, pull on the connector itself, not the wire harness.

HINT: Check to see what kind of connector you are disconnecting before pulling apart.

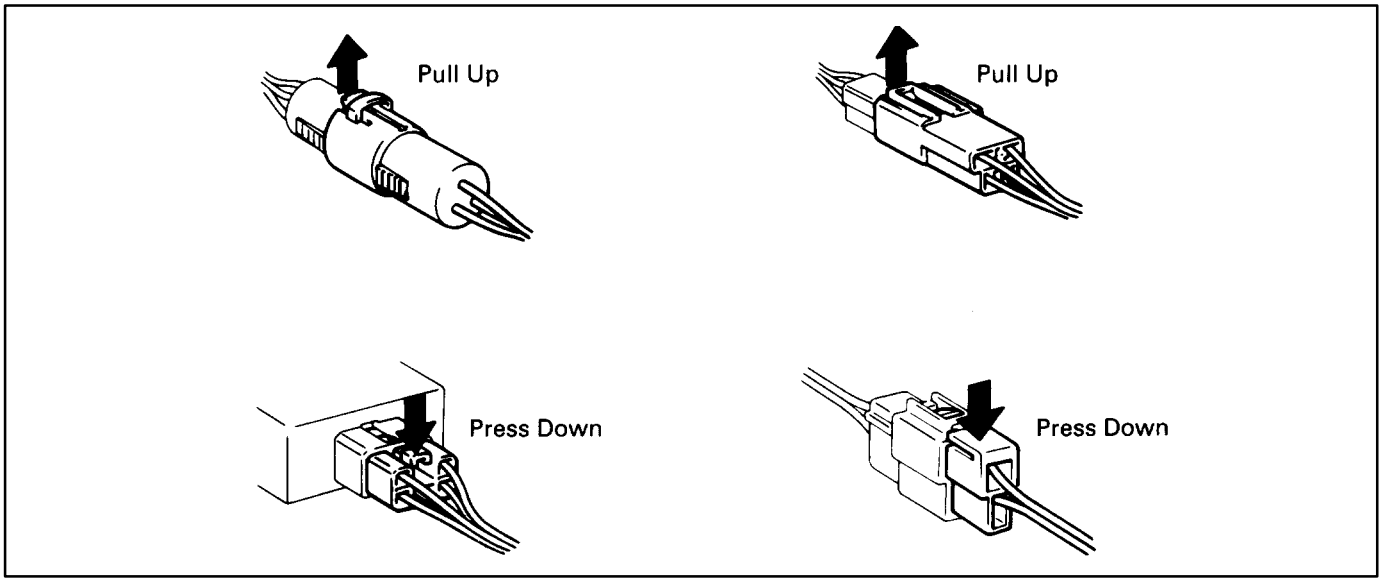

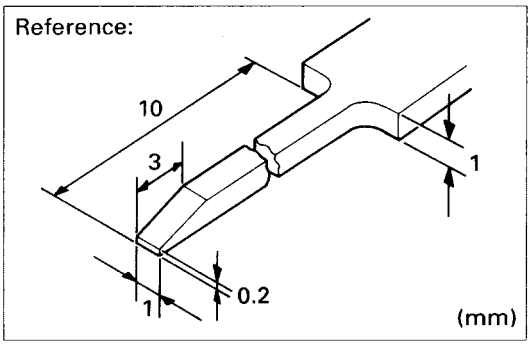

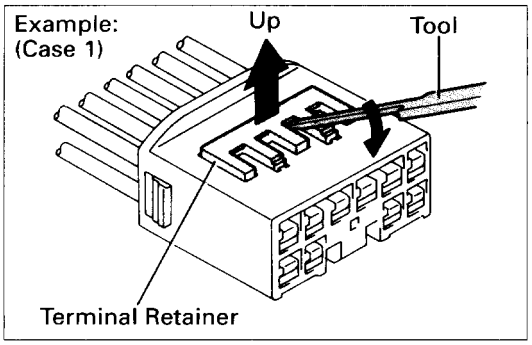

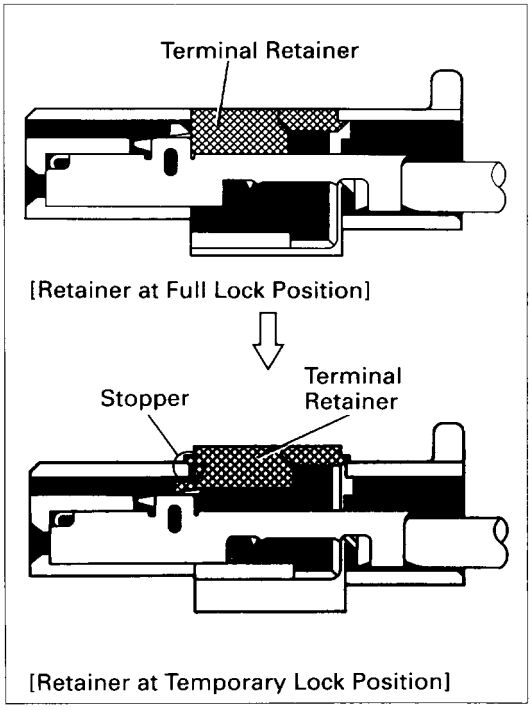

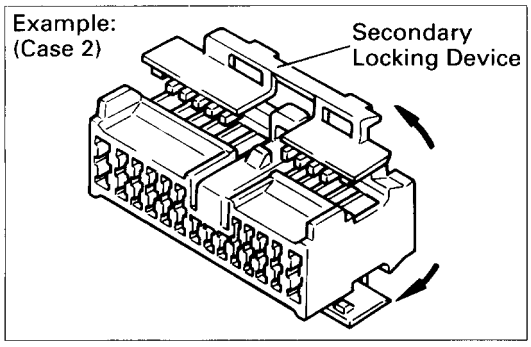

HOW TO REPLACE TERMINAL
(with terminal retainer or secondary locking device)

1. PREPARE THE SPECIAL TOOL

   HINT: To remove the terminal from the connector, please construct and use the special tool or like object shown on the left.

2. DISCONNECT CONNECTOR

3. DISENGAGE THE SECONDARY LOCKING DEVICE OR TERMINAL RETAINER

   (a) Locking device must be disengaged before the terminal locking clip can be released and the terminal removed from the connector.

   (b) Use a special tool or the terminal pick to unlock the secondary locking device or terminal retainer.

   NOTICE:
   Do not remove the terminal retainer from connector body.

   Ⓐ For Non-Waterproof Type Connector

   HINT: The needle insertion position varies according to the connector's shape (number of terminals etc.), so check the position before inserting it.

   "Case 1"
   Raise the terminal retainer up to the temporary lock position.

   "Case 2"
   Open the secondary locking device.

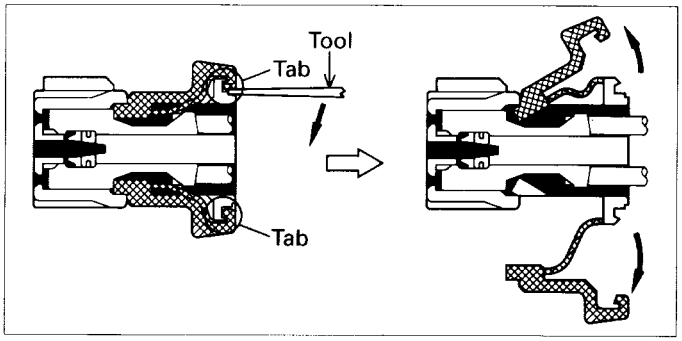

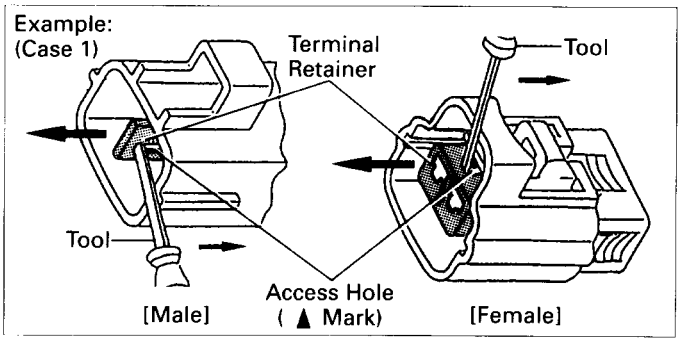

Ⓑ For Waterproof Type Connector

HINT: Terminal retainer color is different according to connector body.

Example:

Terminal Retainer	:Connector Body
Black or White	:Gray
Black or White	:Dark Gray
Gray or White	:Black

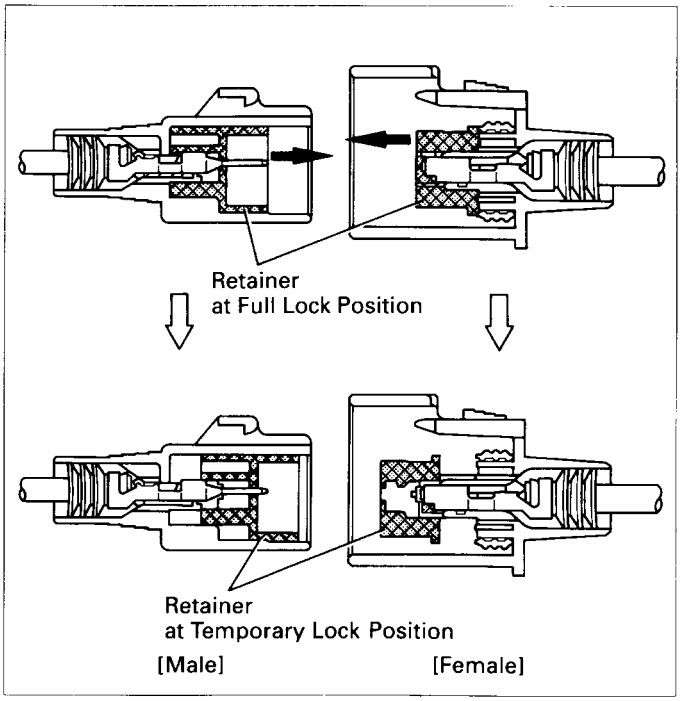

"Case 1"

Type where terminal retainer is pulled up to the temporary lock position (Pull Type).

Insert the special tool into the terminal retainer access hole (• Mark) and pull the terminal retainer up to the temporary lock position.

HINT: The needle insertion position varies according to the connector's shape (number of terminals etc.), so check the position before inserting it.

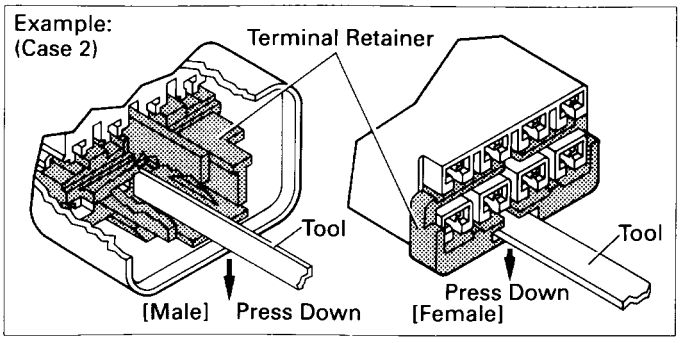

"Case 2"

Type which cannot be pulled as far as Power Lock insert the tool straight into the access hole of terminal retainer as shown.

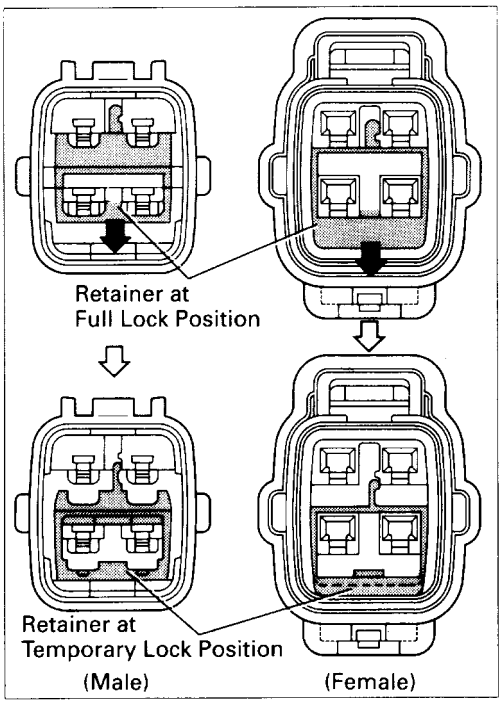

Push the terminal retainer down to the temporary lock position.

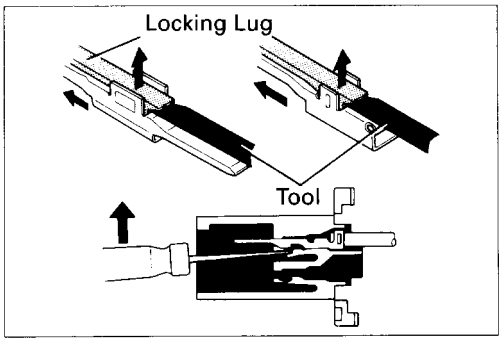

(c) Release the locking lug from terminal and pull the terminal out from rear.

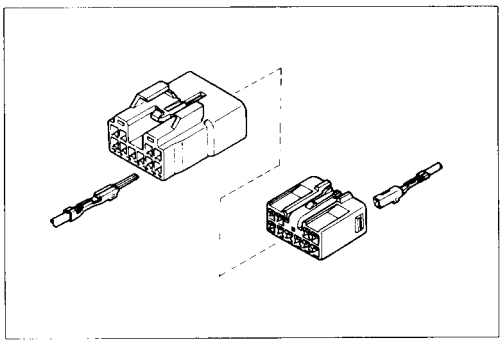

4. INSTALL TERMINAL TO CONNECTOR

(a) Insert the terminal.

HINT:

1. Make sure the terminal is positioned correctly.
2. Insert the terminal until the locking lug locks firmly.
3. Insert the terminal with terminal retainer in the temporary lock position.

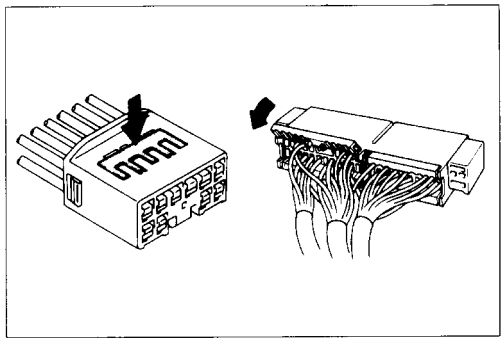

(b) Push the secondary locking device or terminal retainer into the full lock position.

5. CONNECT CONNECTOR

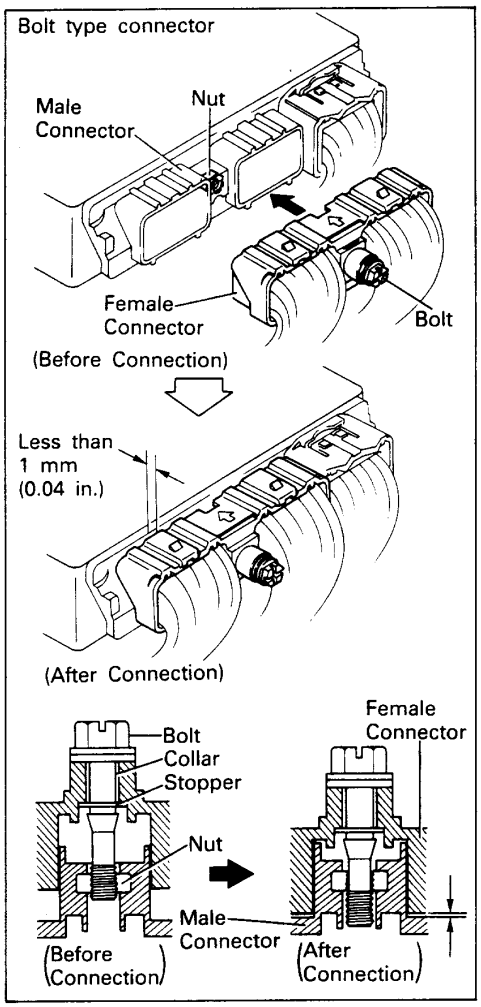

DISCONNECTION AND CONNECTION OF BOLT TYPE CONNECTORS

For engine control module in this vehicle, connections are used which require a bolt built into the connector to be screwed down to securely connect the connector.

1. Disconnect the connector

   After completely loosening the bolt, the two parts of the connector can be separated.

   NOTICE:
   Do not pull the wire harness when disconnecting the connector.

2. Connect the connector

   NOTICE:
   Before connecting the connector, always check that the terminals are not bent or damaged.

   (a) Match the guide section of the male connector correctly with the female connector, then press them together.
   (b) Tighten the bolt.
   Make sure the connectors are completely connected, by tightening the bolt until there is a clearance of less than 1 mm (0.04 in.) between the bottom of male connector and the end of female connector.

ABBREVIATIONS

The follow abbreviations are used in this manual.

ABS	=	Anti-Lock Brake Systerm	O/D	=	Overdrive
A/C	=	Air Conditioning	PPS	=	Progressive Power Steering
ACIS	=	Acoustic Control Induction System	R/B	=	Relay Block
A/T	=	Automatic Transmission	RH	=	Right-Hand
COMB.	=	Combination	SFI	=	Sequential Multiport Fuel Injection
ECU.	=	Electronic Control Unit	SRS	=	Supplemental Restraint System
EGR	=	Exhaust Gas Recirculation	SW	=	Switch
ESA	=	Electronic Spark Advance	TEMP.	=	Temperature
EVAP	=	Evaporative Emission	TRAC	=	Traction Control
J/B	=	Junction Block	VSV	=	Vacuum Switching Valve
LH	=	Left-Hand	w/	=	With
M/T	=	Manual Transmission	w/o	=	Without

* The titles given inside the components are the names of the terminals (terminal codes) and are not treated as being abbreviations.

E GLOSSARY OF TERMS AND SYMBOLS

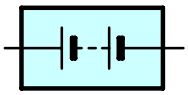

BATTERY
Stores chemical energy and converts it into electrical energy. Provides DC current for the auto's various electrical circuits.

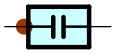

CAPACITOR (Condenser)
A small holding unit for temporary storage of electrical voltage.

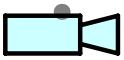

CIGARETTE LIGHTER
An electric resistance heating element.

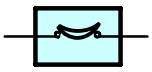

CIRCUIT BREAKER
Basically a reusable fuse, a circuit breaker will heat and open if too much current flows through it. Some units automatically reset when cool, others must be manually reset.



DIODE
A semiconductor which allows current flow in only one direction.



DIODE, ZENER
A diode which allows current flow in one direction but blocks reverse flow only up to a specific voltage. Above that potential, it passes the excess voltage. This acts as a simple voltage regulator.



PHOTODIODE
The photodiode is a semiconductor which controls the current flow according to the amount of light.

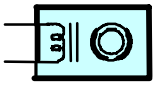

DISTRIBUTOR, IIA
Channels high-voltage current from the ignition coil to the individual spark plugs.

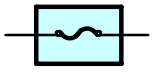

FUSE
A thin metal strip which burns through when too much current flows through it, thereby stopping current flow and protecting a circuit from damage.

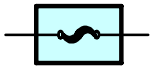

(for Medium Current Fuse)

FUSIBLE LINK
A heavy-gauge wire placed in high amperage circuits which burns through on overloads, thereby protecting the circuit. The numbers indicate the cross-section surface area of the wires.

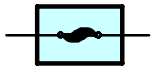

(for High Current Fuse or Fusible Link.)

GROUND
The point at which wiring attaches to the Body, thereby providing a return path for an electrical circuit; without a ground, current cannot flow.

HEADLIGHTS

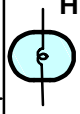

1. **SINGLE FILAMENT**

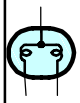

2. **DOUBLE FILAMENT**

Current flow causes a headlight filament to heat up and emit light. A headlight may have either a single (1) filament or a double (2) filament.

HORN
An electric device which sounds a loud audible signal.

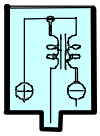

IGNITION COIL
Convert low-voltage DC current into high-voltage ingition current for firing the spark plugs.

LIGHT
Current flow through a filament causes the filament to heat up and emit light.

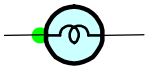

LED (LIGHT EMITTING DIODE)
Upon current flow, these diodes emit light without producing the heat of a comparable light.



METER, ANALOG
Current flow activates a magnetic coil which causes a needle to move, thereby providing a relative display against a background calibration.



METER, DIGITAL
Current flow activates one or many LED's, LCD's, or fluoresent displays, which provide a relative or digital display.



MOTOR
A power unit which converts electrical energy into mechanical energy, especially rotary motion.



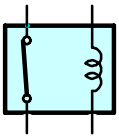

RELAY

1. **NORMALLY CLOSED**

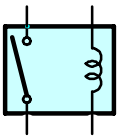

2. **NORMALLY OPEN**

Basically, an electrically operated switch which may be normally closed (1) or open (2). Current flow through a small coil creates a magnetic field which either opens or closes an attached switch.

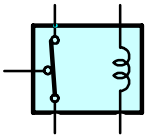

RELAY, DOUBLE THROW

A relay which passes current through one set of contacts or the other.



RESISTOR

An electrical component with a fixed resistance, placed in a circuit to reduce voltage to a specific value.

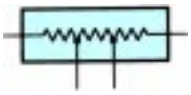

RESISTOR, TAPPED

A resistor which supplies two or more different non adjustable resistance values.



RESISTOR, VARIABLE or RHEOSTAT

A controllable resistor with a variable rate of resistance. Also called a potentiometer or rheostat.

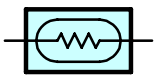

SENSOR (Thermistor)

A resistor which varies its resistance with temperature.



SENSOR, SPEED

Uses magnetic impulses to open and close a switch to create a signal for activation of other components.



SHORT PIN

Used to provide an unbroken connection within a juction block.

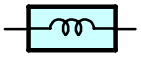

SOLENOID

An electromagnetic coil which forms a magnetic field when current flows, to move a plunger, etc.

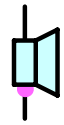

SPEAKER

An electromechanical device which creates sound waves from current flow.

SWITCH, MANUAL

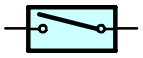

1. **NORMALLY OPEN**

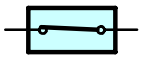

2. **NORMALLY CLOSED**

Open and closes circuits, thereby stopping (1) or allowing (2) current flow.

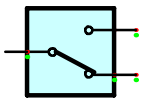

SWITCH, DOUBLE THROW

A switch which continuously passes cureent through one set of contacts or the other.

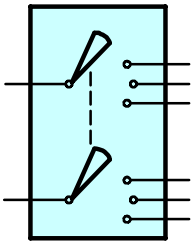

SWITCH, IGNITION

A key operated switch with several positions which allows various circuits, particularly the primary ignition circuit, to become operational.

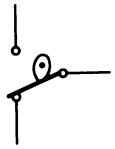

SWITCH, WIPER PARK

Automatically returns wipers to the stop position when the wiper switch is turned off.

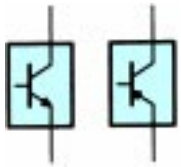

TRANSISTOR

A solid state device typically used as an electronic relay; stops or passes current depending on the voltage applied at “base.”

WIRES



(1) **NOT CONNECTED**

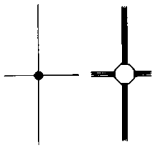

(2) **SPLICED**

Wires are always drawn as straight lines on wiring diagrams. Crossed wires (1) without a black dot at the junction are not joined; crossed wires (2) and a black dot or octagonal (⬡) mark at the juction as spliced (joined) connections.

F RELAY LOCATIONS

[Engine Compartment]

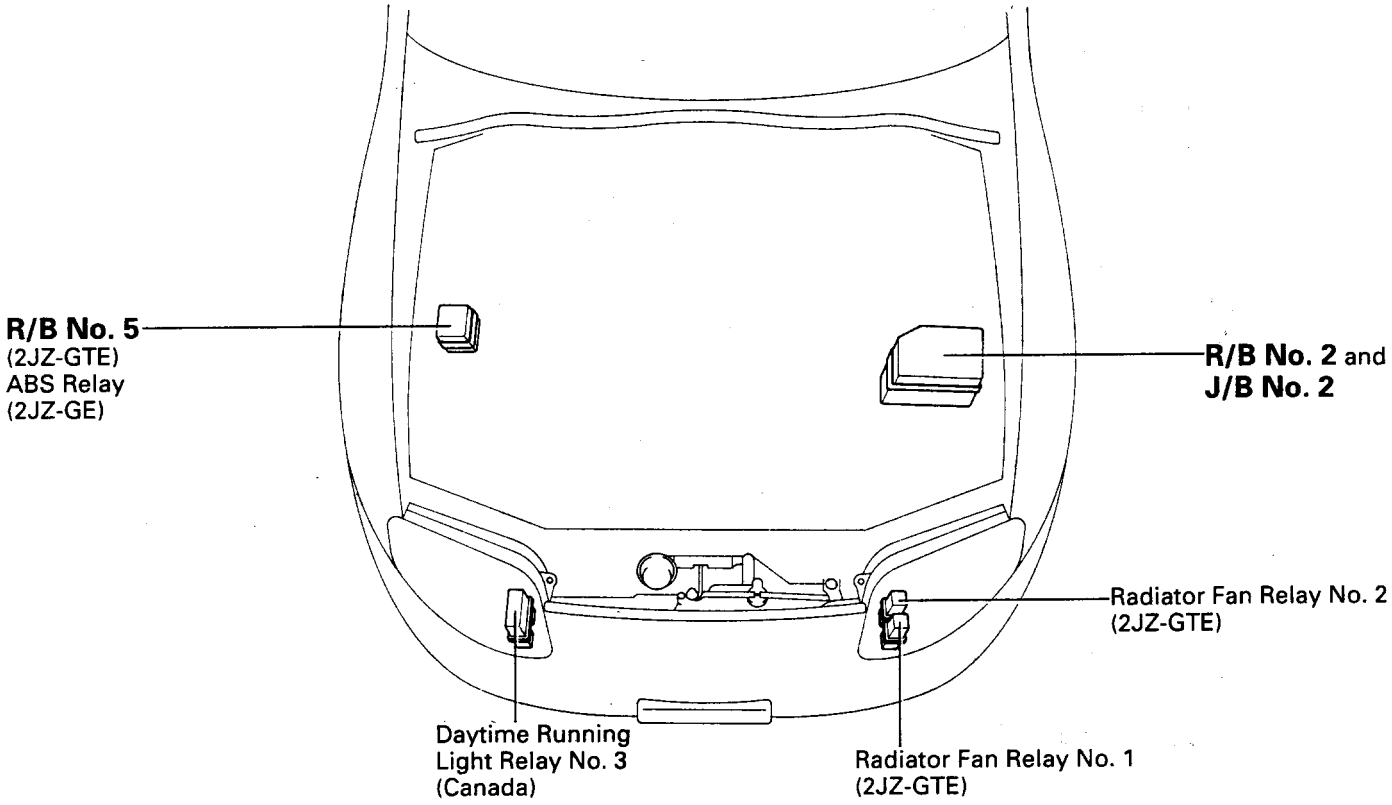

[Instrument Panel]

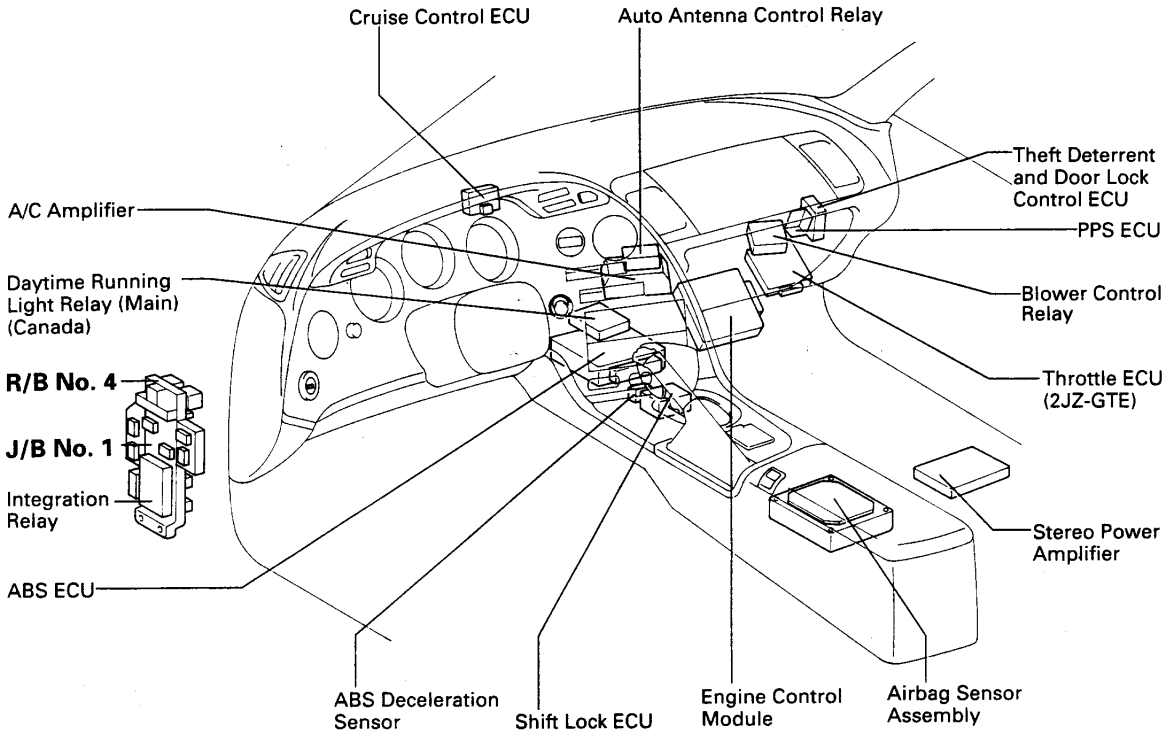

[Body]

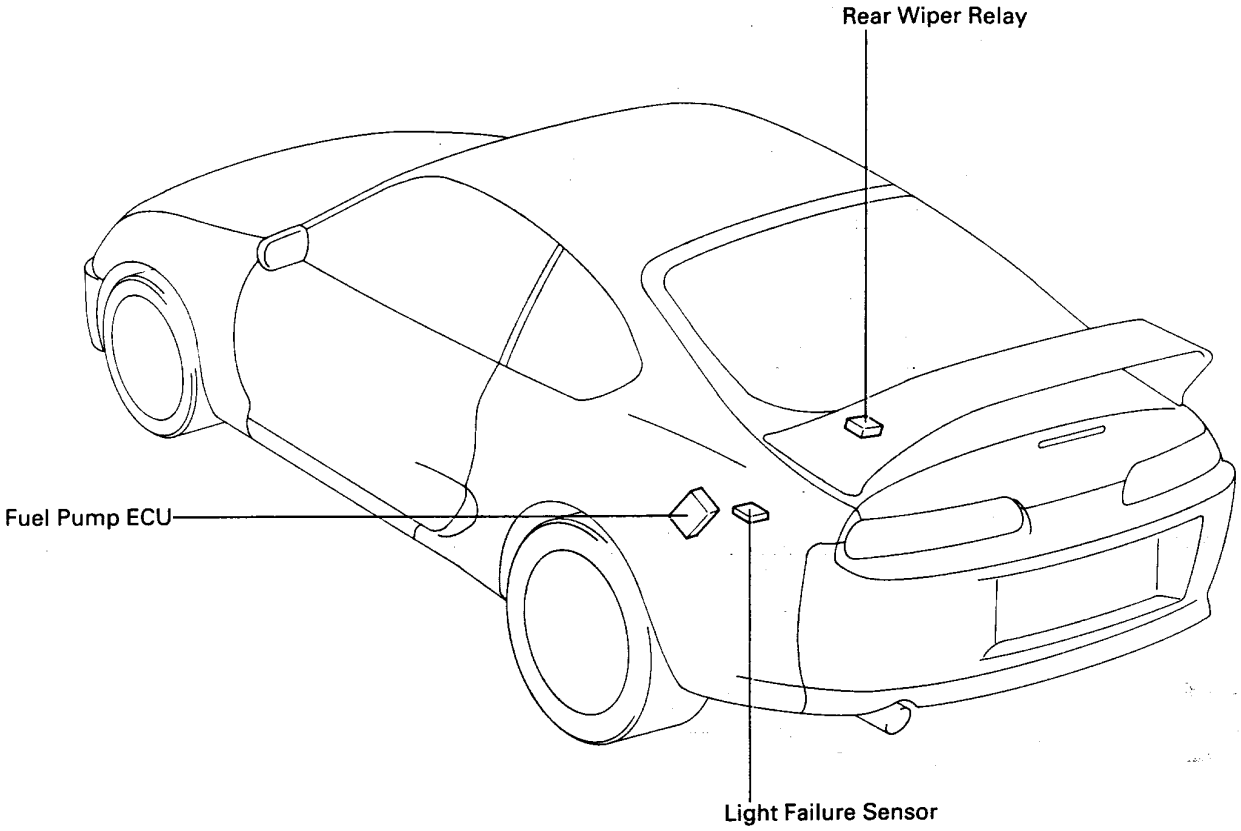
Rear Wiper Relay
Fuel Pump ECU
Light Failure Sensor

[Seat]

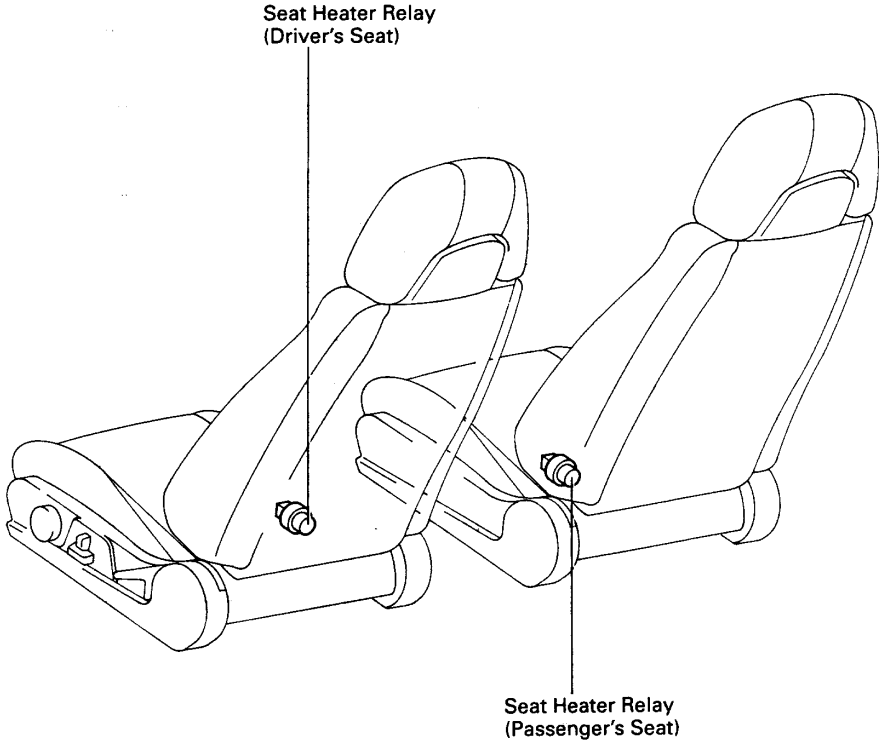
Seat Heater Relay
(Driver's Seat)
Seat Heater Relay
(Passenger's Seat)

F RELAY LOCATIONS

: J/B No. 1	Left Kick Panel (See Page 18)

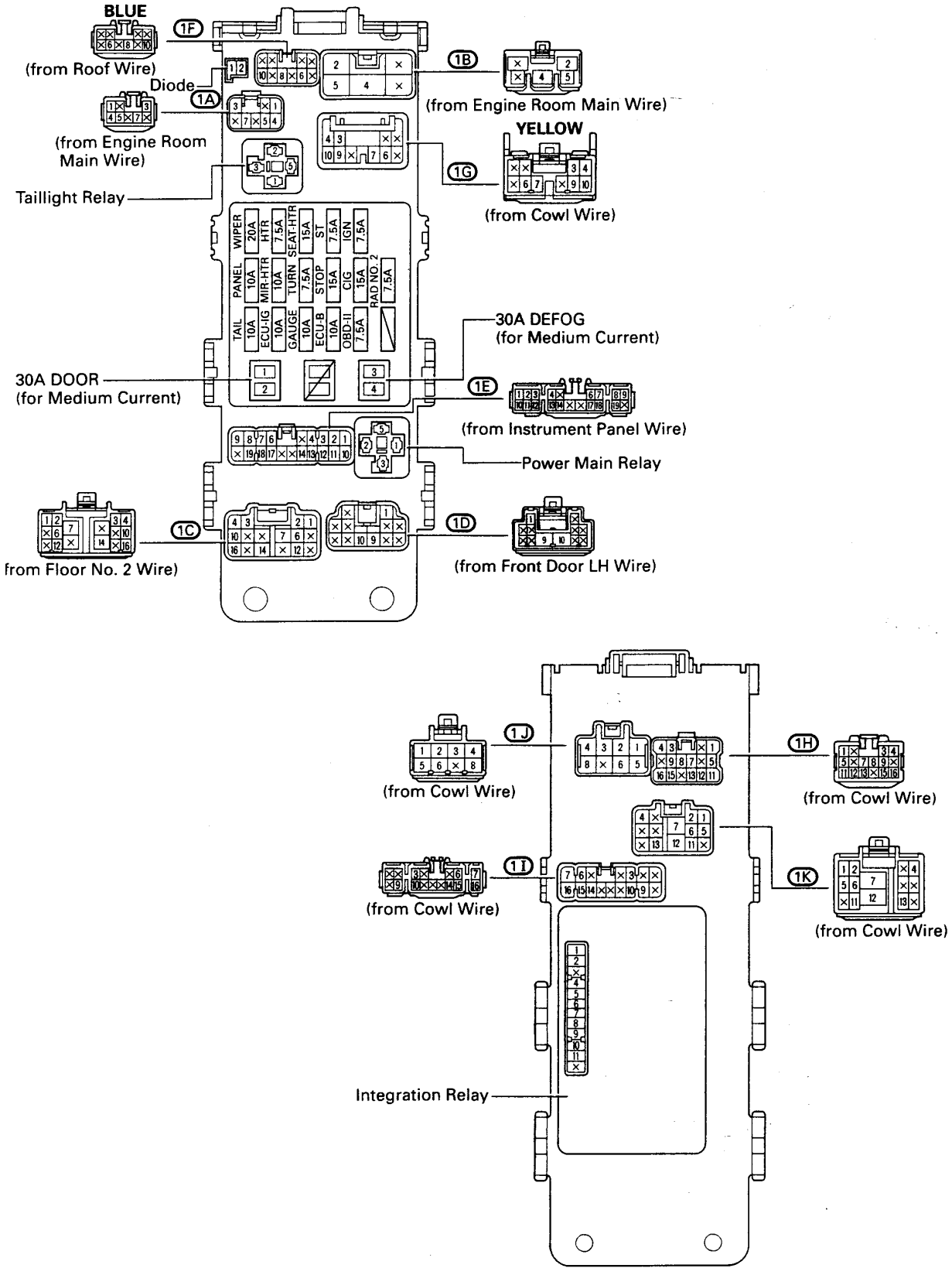

[J/B No. 1 Inner Circuit]

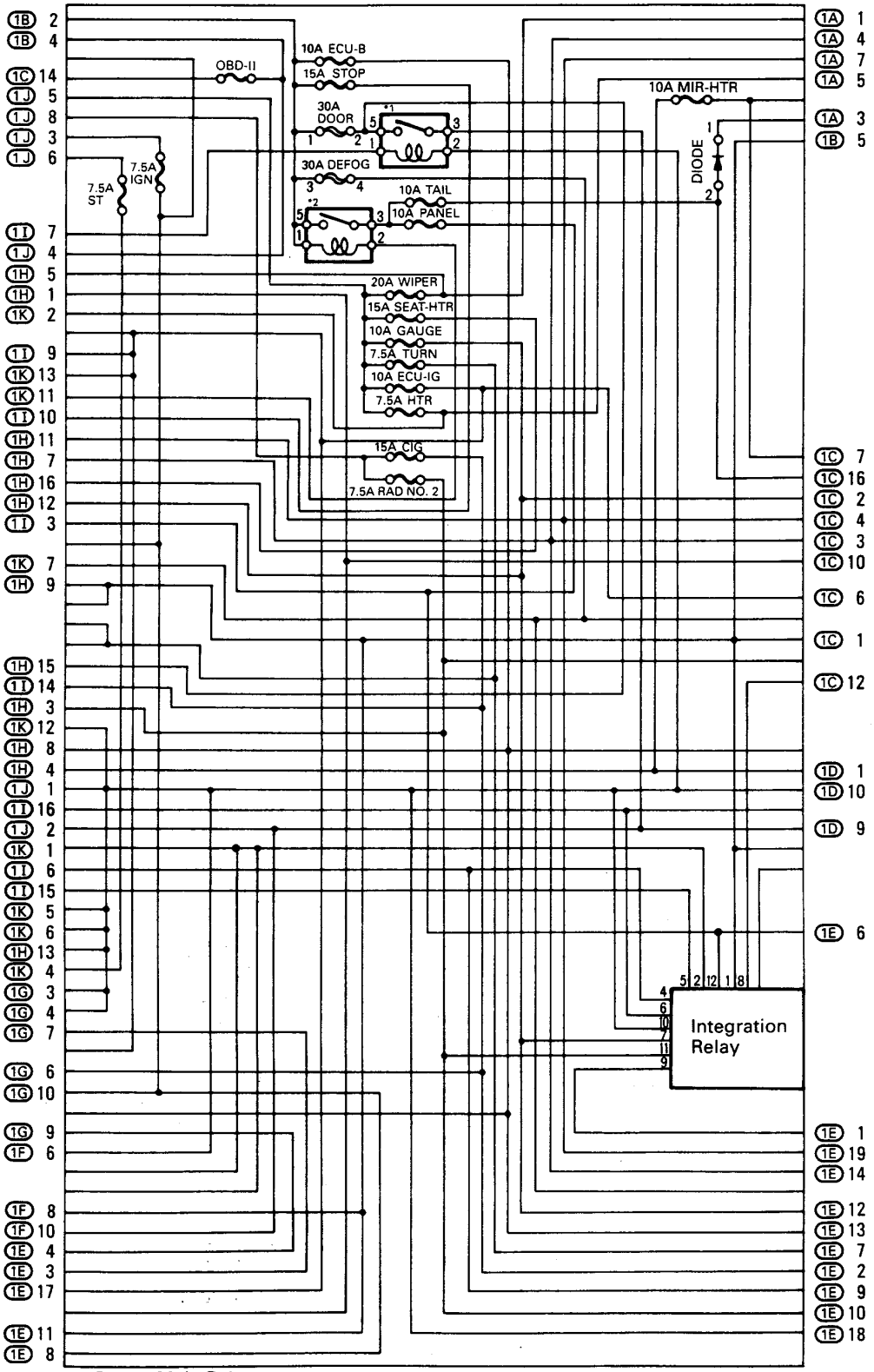

*1: Power Main Relay
*2: Taillight Relay

F RELAY LOCATIONS

② : R/B No. 2 ⬭ : J/B No. 2	**Engine Compartment Left (See Page 18)**

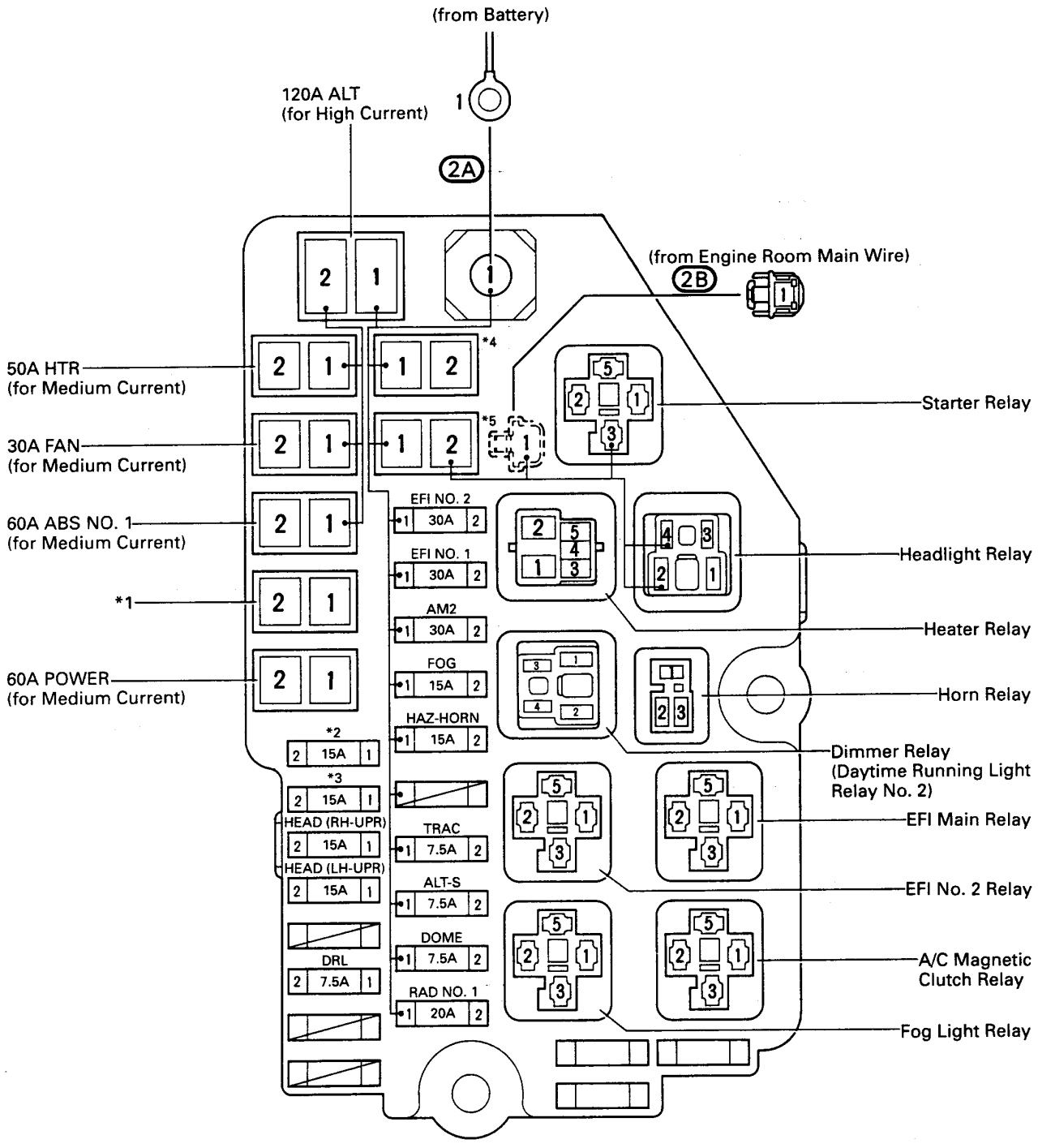

*1: { 50A AM1 (for Medium Current) (USA)
60A AM1 (for Medium Current) (CANADA)

*2: { HEAD (RH) (USA)
HEAD (RH-LWR) (CANADA)

*3: { HEAD (LH) (USA)
HEAD (LH-LWR) (CANADA)

*4: 30A ABS NO. 2
(for Medium Current)

*5: 50A MAIN
(for Medium Current)

④ : R/B No. 4	Left Kick Panel (See Page 18)

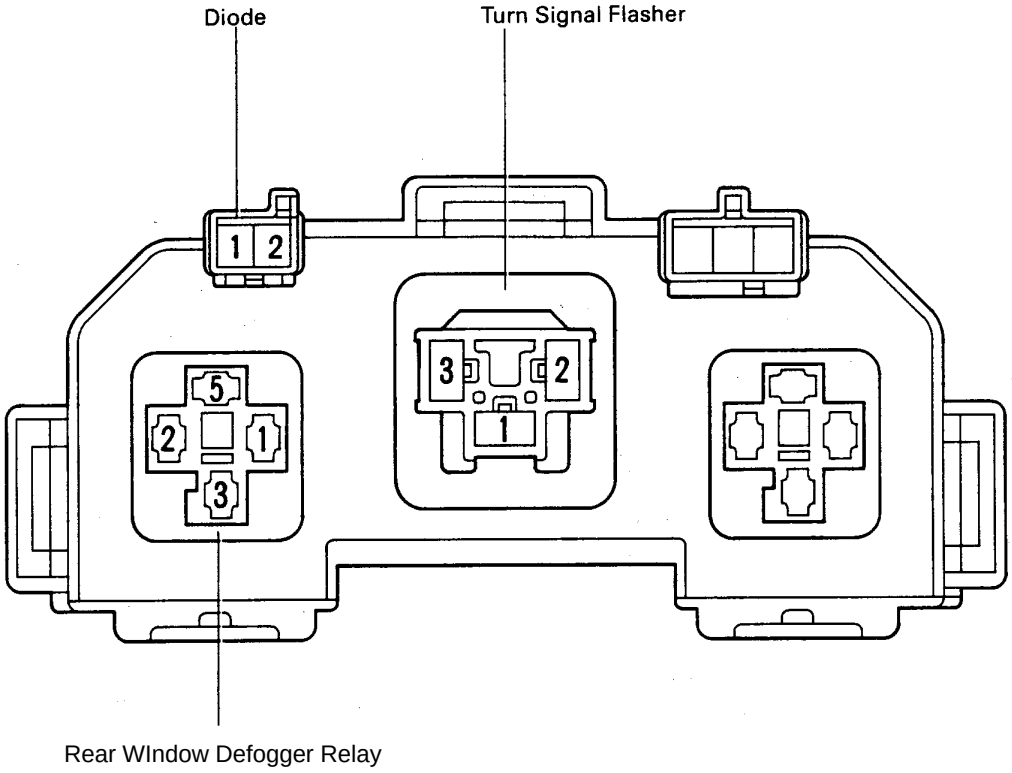

⑤ : R/B No. 5	Engine Compartment Right (See Page 18)

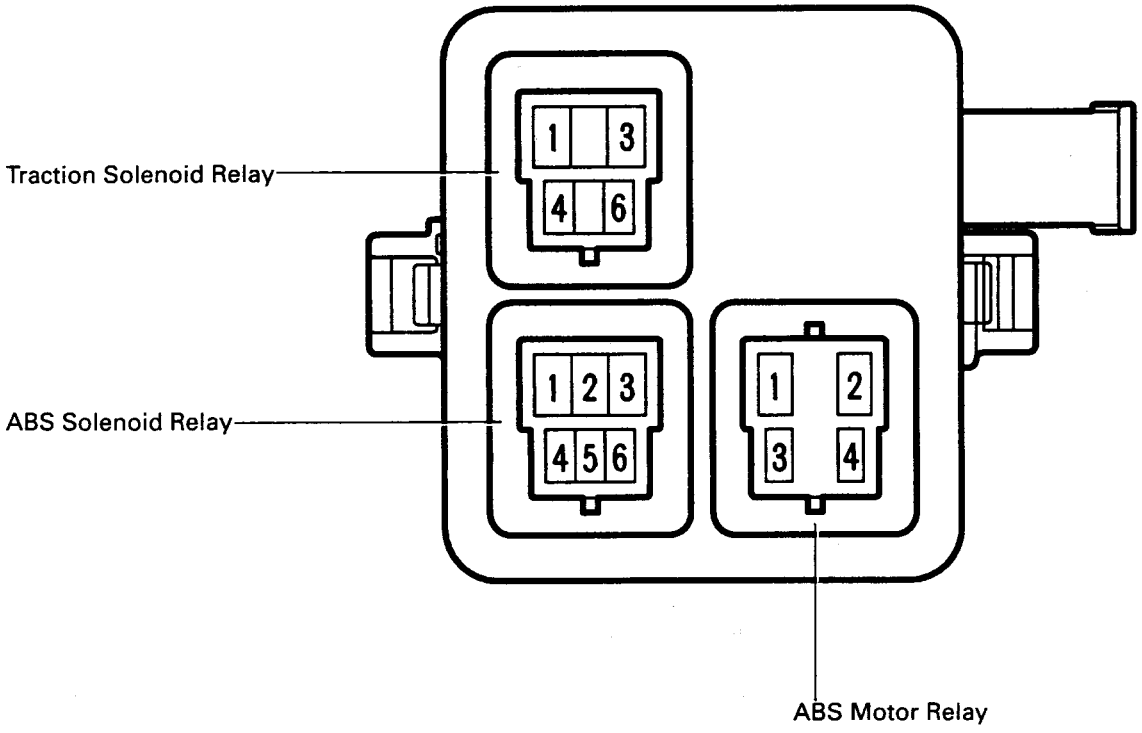

Position of Parts in Engine Compartment

[2JZ-GTE]

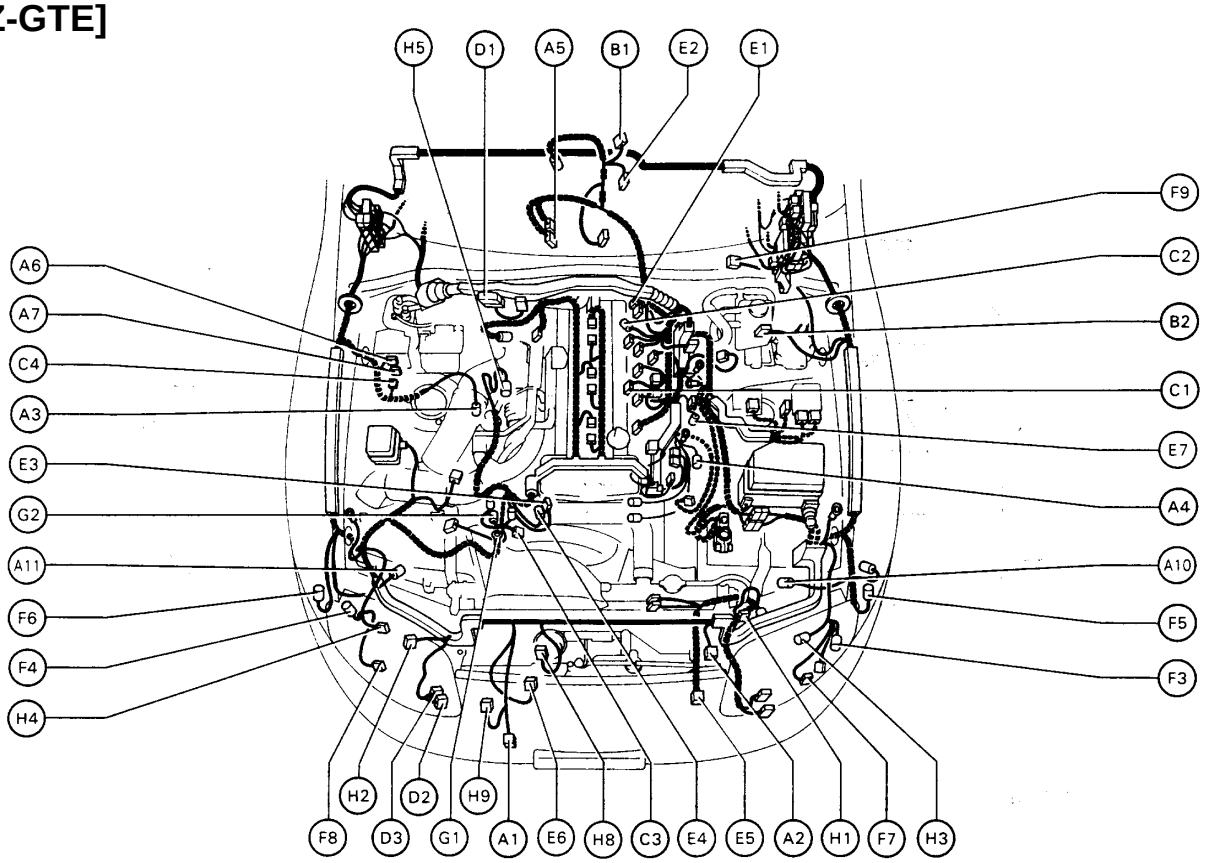

A 1 A/C Ambient Temp Sensor
A 2 A/C Condensor Fan Motor
A 3 A/C Triple Pressure SW
(A/C Dual and Single Pressure SW)
A 4 A/C Magnetic Clutch and Lock Sensor
A 5 A/T Fluid Temp. Sensor
A 6 ABS Actuator
A 7 ABS Actuator
A10 ABS Speed Sensor Front LH
A11 ABS Speed Sensor Front RH

B 1 Back-Up Light SW (M/T)
B 2 Brake Fluid Level Warning SW

C 1 Camshaft Position Sensor No.1
C 2 Camshaft Position Sensor No.2
C 3 Crankshaft Position Sensor
C 4 Cruise Control Actuator

D 1 Data Link Connector 1
D 2 Daytime Running Light Relay No.3
D 3 Daytime Running Light Relay No.3

E 1 EGR Gas Temp. Sensor
E 2 Electronically Controlled Transmission Solenoid
E 3 Engine Coolant Temp. Sensor
E 4 Engine Coolant Temp. Sender
E 5 Engine Coolant Temp. SW
E 6 Engine Hood Courtesy SW
E 7 Engine Oil Level Sensor

F 3 Front Fog Light LH
F 4 Front Fog Light RH
F 5 Front Side Marker Light LH
F 6 Front Side Marker Light RH
F 7 Front Turn Signal Light LH
F 8 Front Turn Signal Light RH and Parking Light RH
F 9 Front Wiper Motor

G 1 Generator
G 2 Generator

H 1 Headlight Hi LH
H 2 Headlight Hi RH
H 3 Headlight Lo LH
H 4 Headlight Lo RH
H 5 Heated Oxygen Sensor (Bank 1 Sensor 1)
H 8 Horn LH
H 9 Horn RH

Position of Parts in Engine Compartment

[2JZ-GTE]

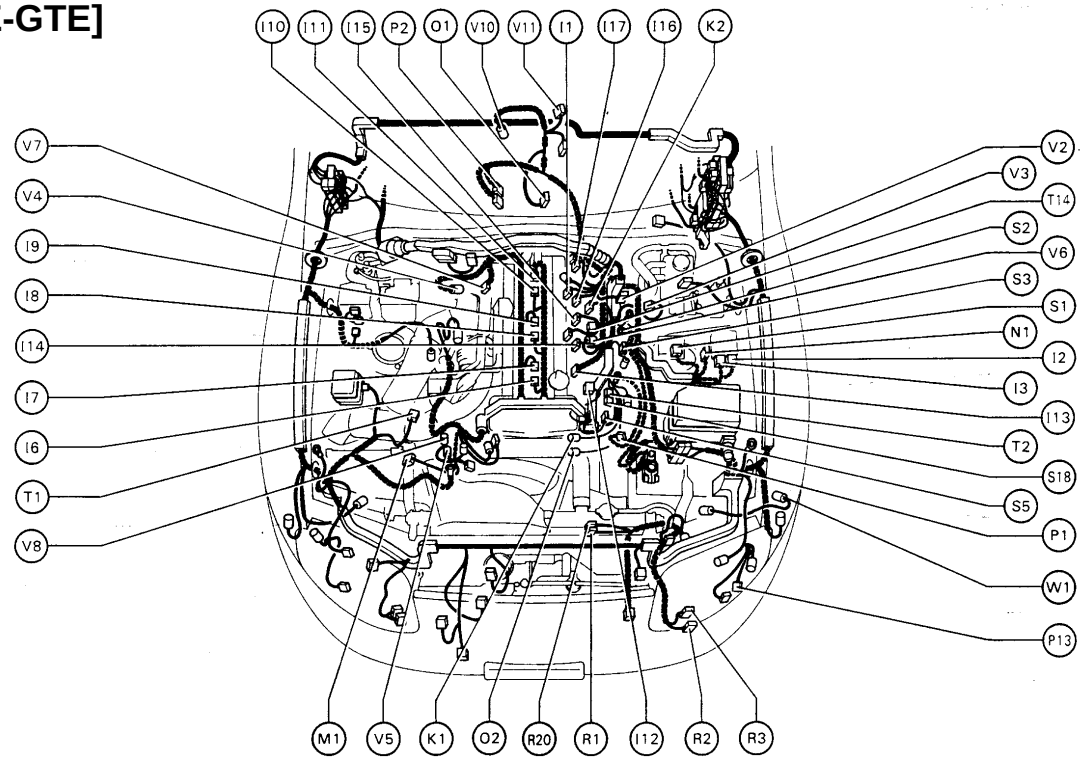

I 1 Idle AIr Control Valve
I 2 Igniter
I 3 Igniter
I 6 Ignition Coil No.1
I 7 Ignition Coil No.2
I 8 Ignition Coil No.3
I 9 Ignition Coil No.4
I10 Ignition Coil No.5
I11 Ignition Coil No.6
I12 Injector No.1
I13 Injector No.2
I14 Injector No.3
I15 Injector No.4
I16 Injector No.5
I17 Injector No.6

K 1 Knock Sensor (on Front Side)
K 2 Knock Sensor (on Rear Side)

M 1 Mass Air Flow Meter

N 1 Noise Filter

O 1 O/D Direct Clutch Speed Sensor
O 2 Oil Pressure SW

P 1 PPS Solenoid
P 2 Park/Neutral Position SW, Back-Up Light SW and A/T Indicator Light SW (A/T)
P13 Parking Light LH

R 1 Radiator Fan Motor No.1
R 2 Radiator Fan Relay No.1
R 3 Radiator Fan Relay No.2
R20 Radiator Fan Motor No.2

S 1 SFI Resistor
S 2 Starter
S 3 Starter
S 5 Sub Throttle Position Sensor
S18 Sub Throttle Valve Motor

T 1 Theft Deterrent Horn
T 2 Throttle Position Sensor
T14 Turbo Pressure Sensor

V 2 VSV (EGR)
V 3 VSV (EVAP)
V 4 VSV (Exhaust Bypass Valve)
V 5 VSV (Exhaust Gas Control Valve)
V 6 VSV (Fuel Pressure Up)
V 7 VSV (Intake Air Control Valve)
V 8 VSV (Waste Gate Valve)
V10 Vehicle Speed Sensor No.1 (Combination Meter)
V11 Vehicle Speed Sensor No.2 (Electronically Controlled Transmission)

W 1 Washer Motor

Position of Parts in Engine Compartment

[2JZ-GE]

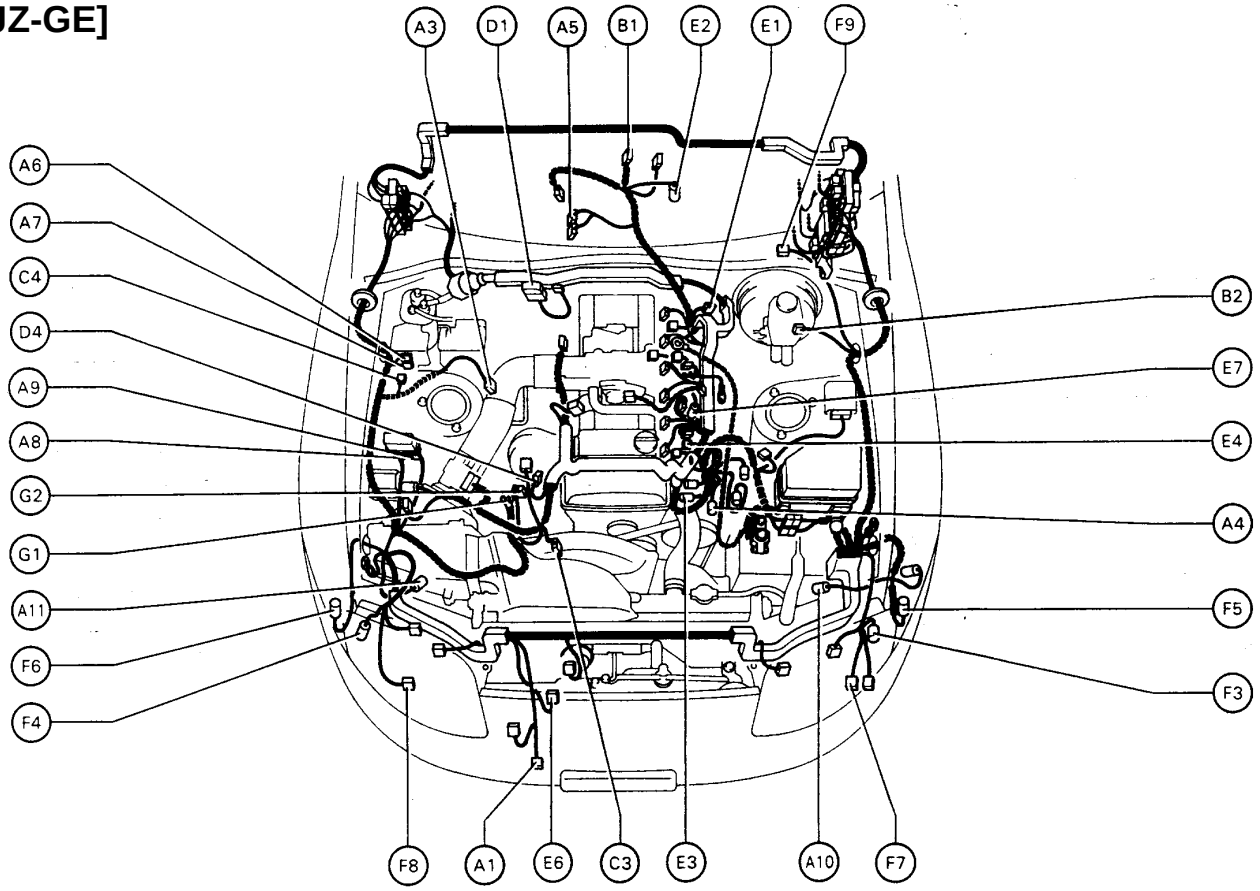

A 1 A/C Ambient Temp. Sensor
A 3 A/C Dual Pressure SW
A 4 A/C Magnetic Clutch and Lock Sensor
A 5 A/T Fluid Temp. Sensor
A 6 ABS Actuator
A 7 ABS Actuator
A 8 ABS Relay
A 9 ABS Relay
A10 ABS Speed Sensor Front LH
A11 ABS Speed Sensor Front RH

B 1 Back-Up Light SW (M/T)
B 2 Brake Fluid Level Warning SW

C 3 Crankshaft Position Sensor
C 4 Cruise Control Actuator

D 1 Data Link Connector 1
D 4 Distributor

E 1 EGR Gas Temp. Sensor
E 2 Electronically Controlled Transmission Solenoid
E 3 Engine Coolant Temp. Sensor
E 4 Engine Coolant Temp. Sender
E 6 Engine Hood Courtesy SW
E 7 Engine Oil Level Sensor

F 3 Front Fog Light LH
F 4 Front Fog Light RH
F 5 Front Side Marker Light LH
F 6 Front Side Marker Light RH
F 7 Front Turn Signal Light LH
F 8 Front Turn Signal Light RH and Parking Light RH
F 9 Front Wiper Motor

G 1 Generator
G 2 Generator

Position of Parts in Engine Compartment

[2JZ-GE]

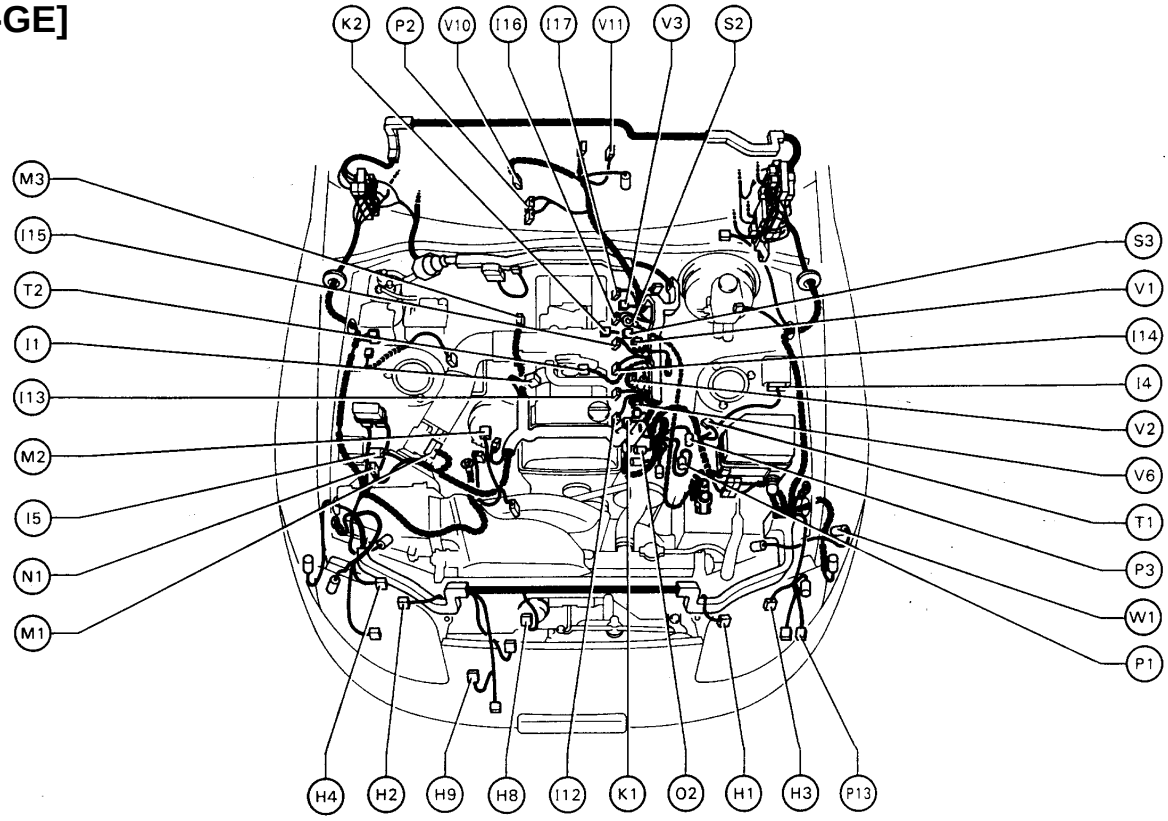

H 1 Headlight Hi LH
H 2 Headlight Hi RH
H 3 Headlight Lo LH
H 4 Headlight Lo RH
H 8 Horn LH
H 9 Horn RH

I 1 Idle Air Control Valve
I 4 Igniter
I 5 Ignition Coil
I 12 Injector No.1
I 13 Injector No.2
I 14 Injector No.3
I 15 Injector No.4
I 16 Injector No.5
I 17 Injector No.6

K 1 Knock Sensor (on Front Side)
K 2 Knock Sensor (on Rear Side)

M 1 Mass Air Flow Meter
M 2 Main Heated Oxygen Sensor (Bank 1 Sensor 1)
M 3 Main Heated Oxygen Sensor (Bank 2 Sensor 1)

N 1 Noise Filter

O 2 Oil Pressure SW

P 1 PPS Solenoid
P 2 Park/Neutral Position SW, Back-Up Light SW and A/T Indicator Light SW (A/T)
P 3 Power Steering Pressure SW
P13 Parking Light LH

S 2 Starter
S 3 Starter

T 1 Theft Deterrent Horn
T 2 Throttle Position Sensor

V 1 VSV (ACIS)
V 2 VSV (EGR)
V 3 VSV (EVAP)
V 6 VSV (Fuel Pressure Up)
V10 Vehicle Speed Sensor No.1 (Combination Meter)
V11 Vehicle Speed Sensor No.2 (Electronically Controlled Transmission)

W 1 Washer Motor

Position of Parts in Instrument Panel

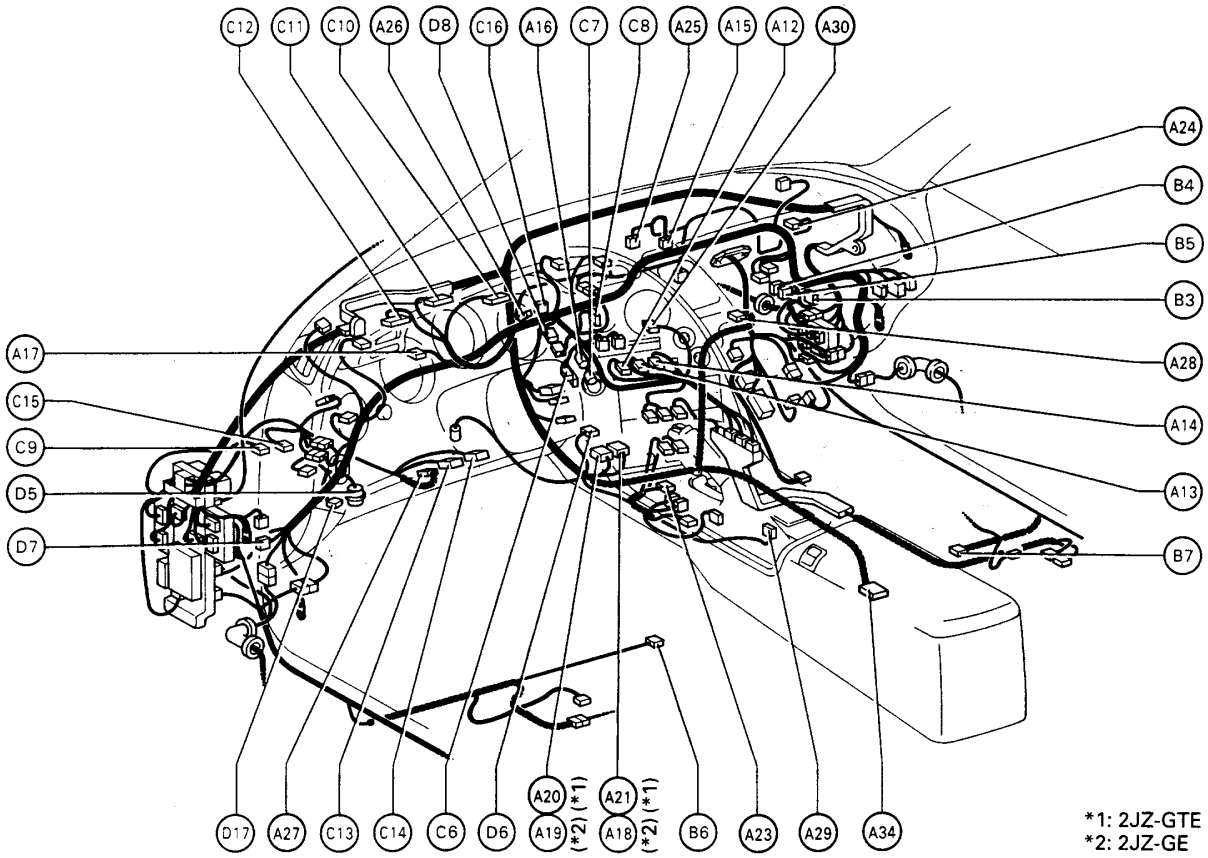

A12 A/C Amplifier
A13 A/C Amplifier
A14 A/C Amplifier
A15 A/C Evaporator Temp. Sensor
A16 A/C Room Temp. Sensor
A17 A/C Solar Sensor
A18 ABS ECU
A19 ABS ECU
A20 ABS ECU
A21 ABS ECU
A23 ABS Deceleration Sensor
A24 Air Inlet Control Servo Motor
A25 Air Mix Control Servo Motor
A26 Air Vent Mode Control Servo Motor
A27 Airbag Squib (Steering Wheel Pad)
A28 Airbag Squib (Front Passenger Airbag Assembly)
A29 Ashtray Illumination
A30 Auto Antenna Control Relay
A34 Airbag Sensor

B 3 Blower Motor
B 4 Blower Motor Control Relay
B 5 Blower Motor Control Relay
B 6 Buckle SW LH
B 7 Buckle SW RH

C 6 Cigarette Lighter
C 7 Cigarette Lighter Illumination
C 8 Clock
C 9 Clutch Start SW
C10 Combination Meter
C11 Combination Meter
C12 Combination Meter
C13 Combination SW
C14 Combination SW
C15 Cruise Control Clutch SW
C16 Cruise Control ECU

D 5 Data Link Connector 2
D 6 Daytime Running Light Relay (Main)
D 7 Diode (Interior Light)
D 8 Diode (Idle-Up)
D17 Data Link Connector 3

Position of Parts in Instrument Panel

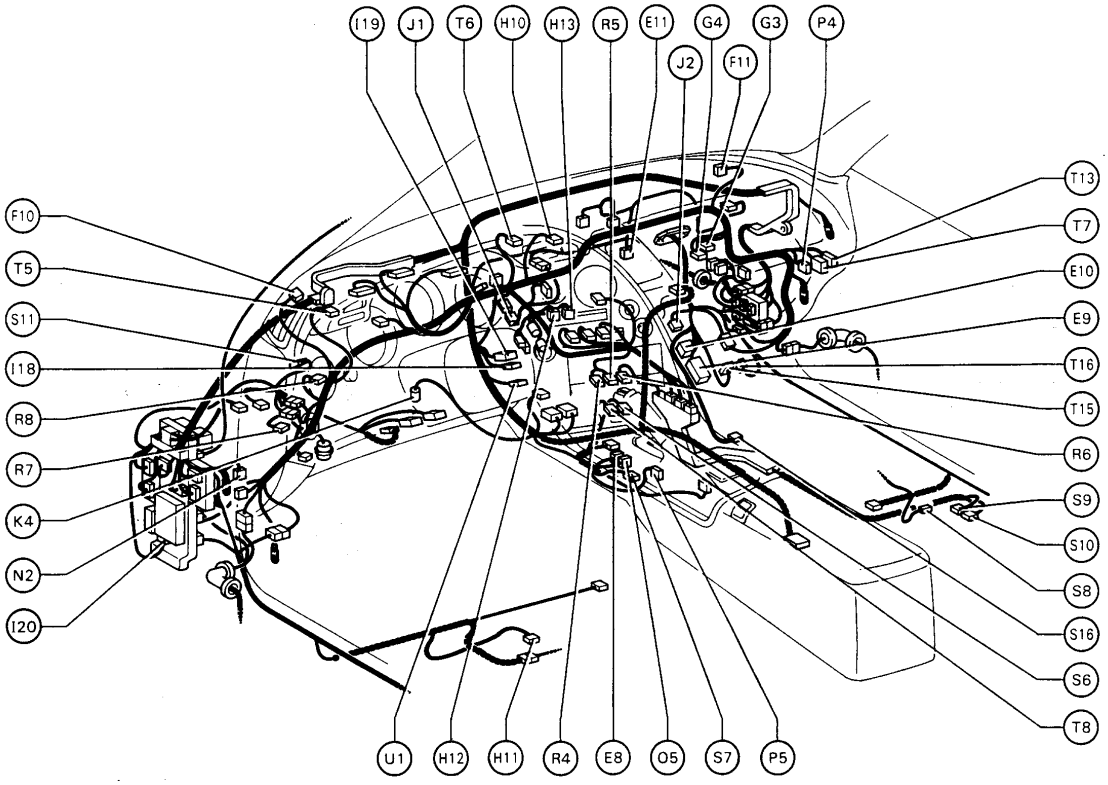

E 8 Electronically Controlled Transmission Pattern Select SW
E 9 Engine Control Module
E10 Engine Control Module
E11 Engine Coolant Temp. Sensor (A/C System)

F10 Front Tweeter (Speaker) LH
F11 Front Tweeter (Speaker) RH

G 3 Glove Box Light
G 4 Glove Box Light SW

H10 Hazard SW
H11 Heated Oxygen Sensor (Bank 1 Sensor 2)
H12 Heater Control SW
H13 Heater Control SW

I18 Ignition Key Cylinder Light
I19 Ignition SW
I20 Integration Relay

J 1 Junction Connector
J 2 Junction Connector

K 4 Kick Down SW

N 2 Noise Filter

O 5 O/D Main SW and A/T Indicator Illumination

P 4 PPS ECU
P 5 Parking Brake SW

R 4 Radio and Player (w/o Stereo Power Amplifier)
R 5 Radio and Player (w/o Stereo Power Amplifier)
R 6 Radio and Player (w/ Stereo Power Amplifier)
R 7 Remote Control Mirror SW
R 8 Rheostat

S 6 Seat Heater SW
S 7 Shift Lock ECU
S 8 Stereo Power Amplifier
S 9 Stereo Power Amplifier
S10 Stereo Power Amplifier
S11 Stop Light SW
S16 Sub Heated Oxygen Sensor (Bank 1 Sensor 2)

T 5 Telltale Light LH
T 6 Telltale Light RH
T 7 Theft Deterrent and Door Lock Control ECU
T 8 Traction Control SW
T13 Theft Deterrent and Door Lock Control ECU
T15 Throttle ECU
T16 Throttle ECU

U 1 Unlock Warning SW

Position of Parts in Body

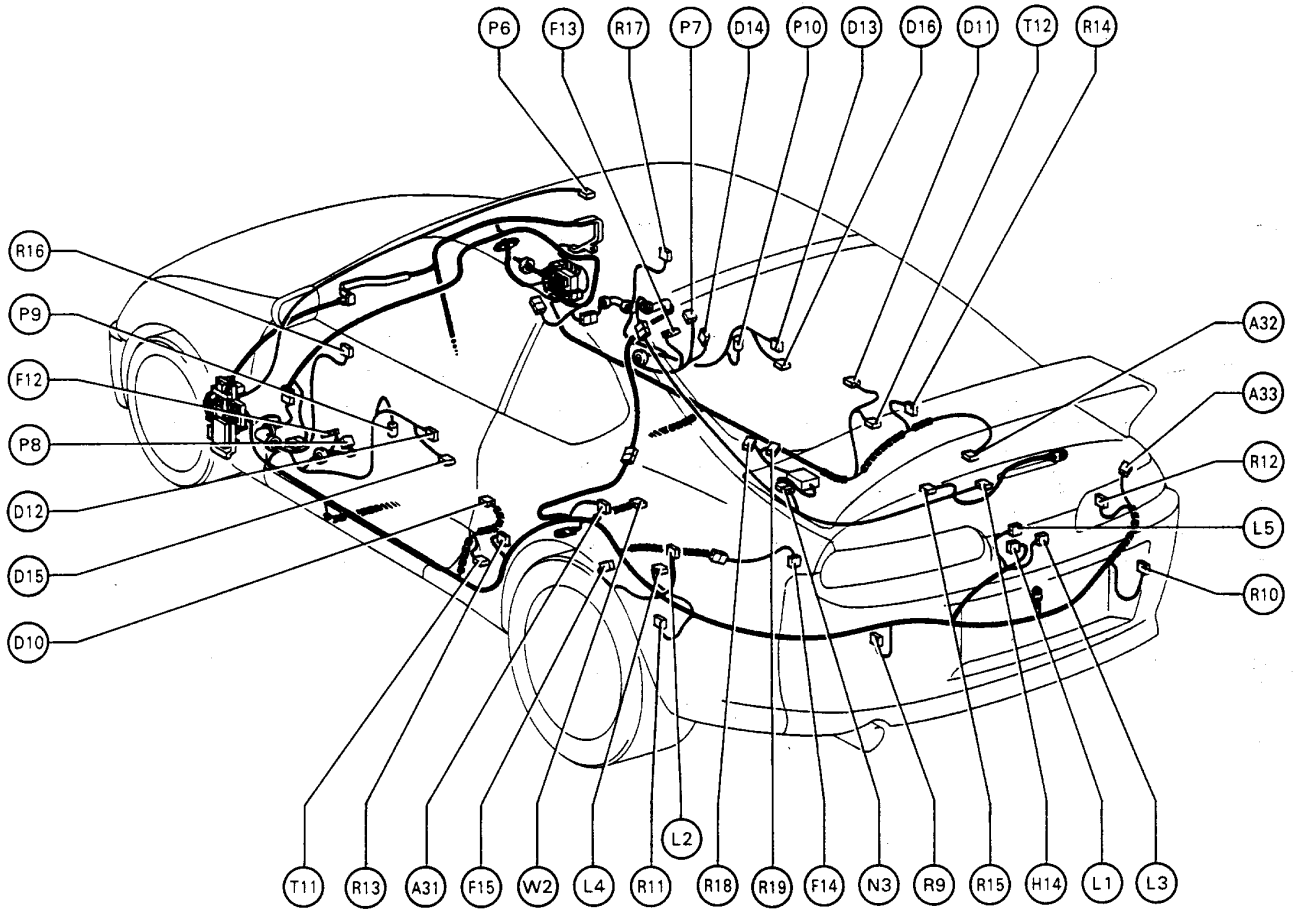

A31 ABS Speed Sensor Rear LH
A32 ABS Speed Sensor Rear RH
A33 Auto Antenna Motor

D10 Door Courtesy SW LH
D11 Door Courtesy SW RH
D12 Door Key Lock and Unlock SW LH
D13 Door Key Lock and Unlock SW RH
D14 Door Lock Control SW RH
D15 Door Lock Motor and Door Unlock Detection SW LH
D16 Door Lock Motor and Door Unlock Detection SW RH

F12 Front Door Speaker LH
F13 Front Door Speaker RH
F14 Fuel Pump and Sender
F15 Fuel Pump ECU

H14 High Mounted Stop Light

L 1 License Plate Light
L 2 Light Failure Sensor
L 3 Luggage Compartment Key Unlock SW
L 4 Luggage Compartment Light
L 5 Luggage Compartment Light SW

N 3 Noise Filter

P 6 Personal Light
P 7 Power Window Control SW RH
P 8 Power Window Master SW and Door Lock Control SW LH
P 9 Power Window Motor LH
P10 Power Window Motor RH

R 9 Rear Combination Light LH
R10 Rear Combination Light RH
R11 Rear Side Marker Light LH
R12 Rear Side Marker Light RH
R13 Rear Speaker LH
R14 Rear Speaker RH
R15 Rear Wiper Motor and Relay
R16 Remote Control Mirror and Mirror Heater LH
R17 Remote Control Mirror and Mirror Heater RH
R18 Rear Window Defogger (+)
R19 Rear Window Defogger (-)

T11 Tension Reducer Solenoid LH
T12 Tension Reducer Solenoid RH

W2 Woofer (Speaker)

Position of Parts in Seat

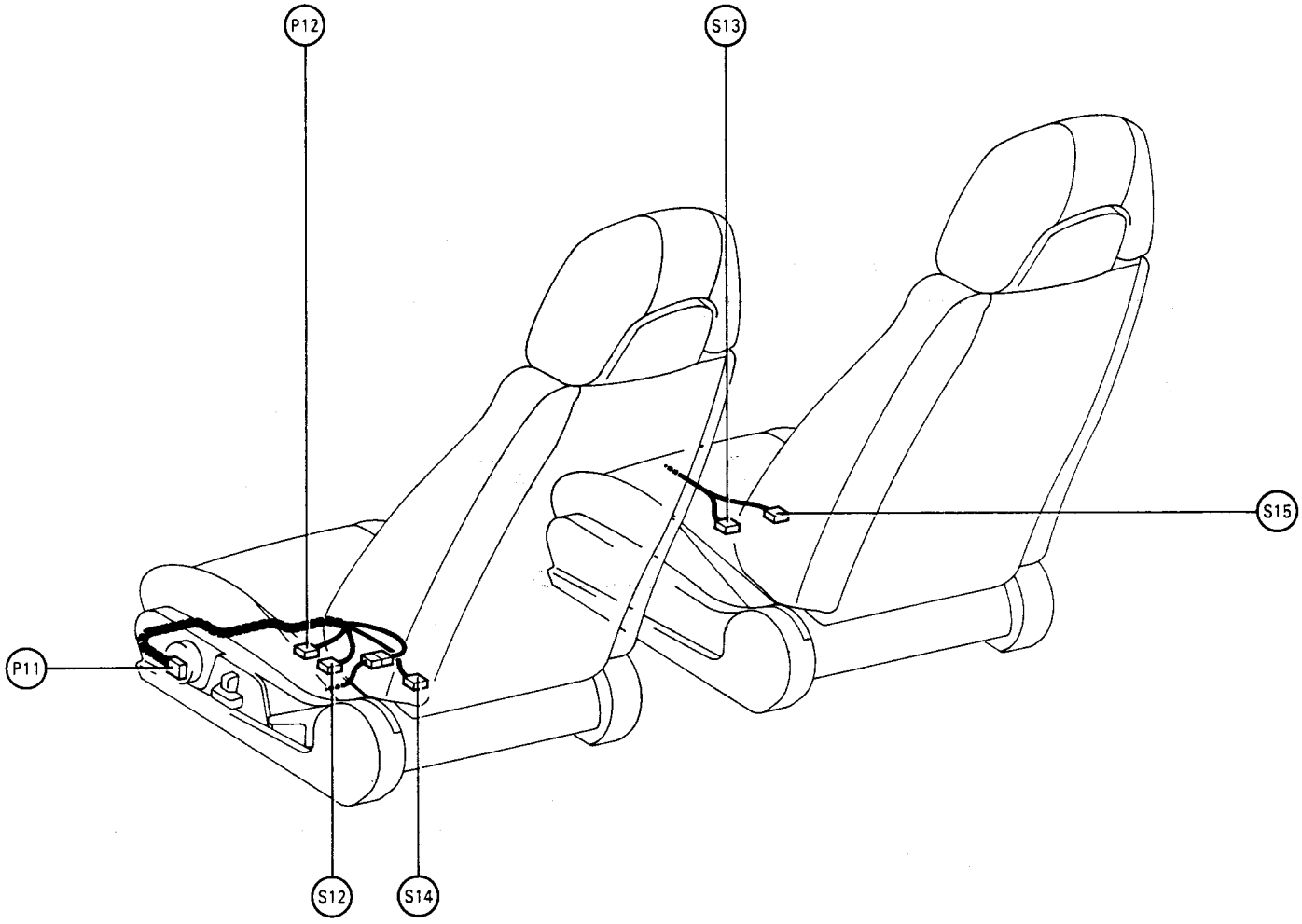

P11 Power Seat Control SW (Driver's Seat)
P12 Power Seat Motor (Driver's Seat Slide Control)

S12 Seat Heater (Driver's Seat)
S13 Seat Heater (Front Passenger's Seat)
S14 Seat Heater Relay (Driver's Seat)
S15 Seat Heater Relay (Front Passenger's Seat)

: Location of Connector Joining Wire Harness and Wire Harness
: Location of Ground Points

[2JZ-GTE]

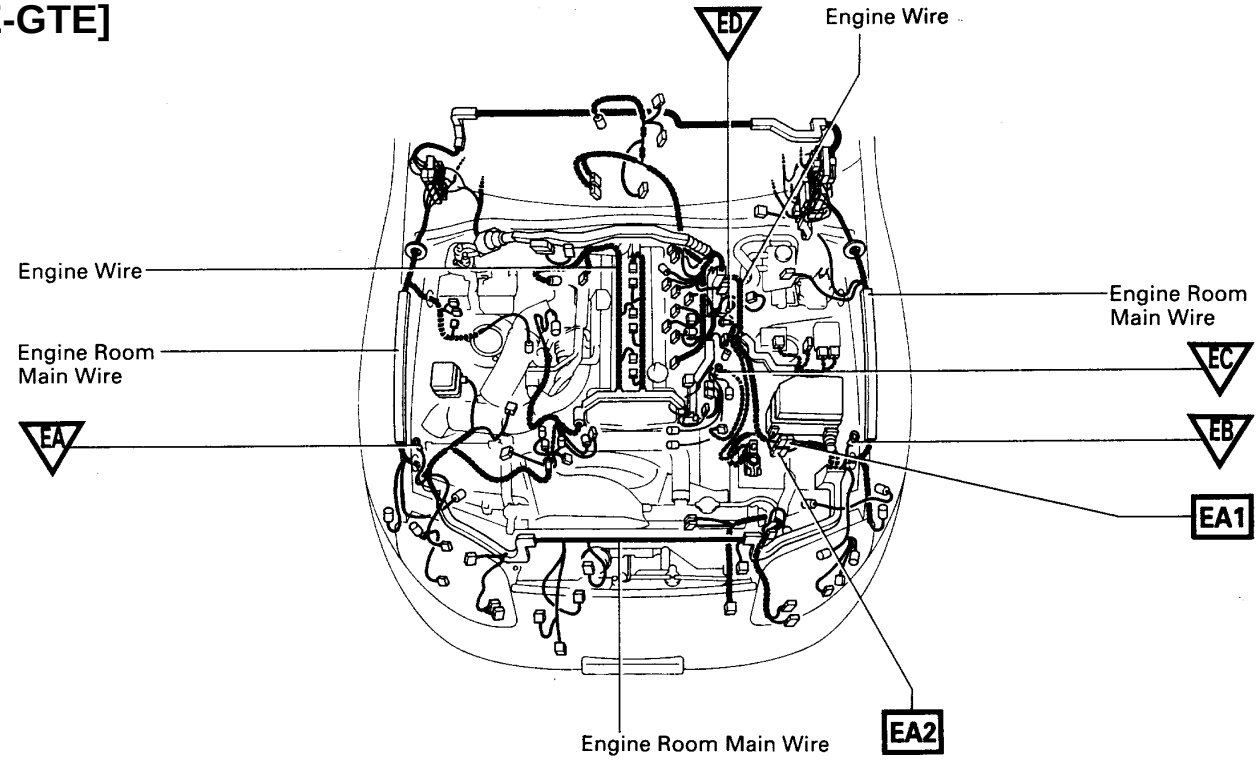

: Location of Splice Points

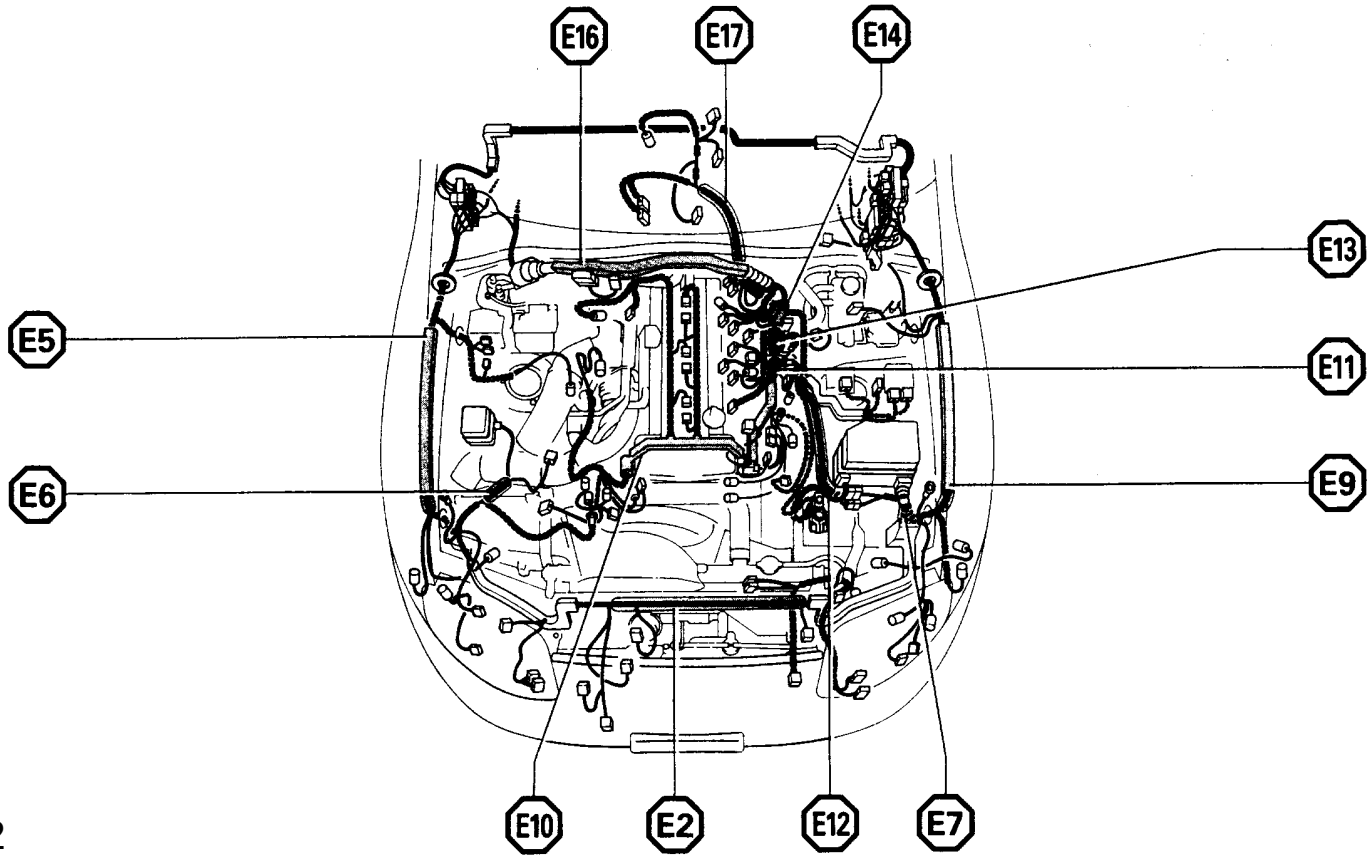

Connector Joining Wire Harness and Wire Harness

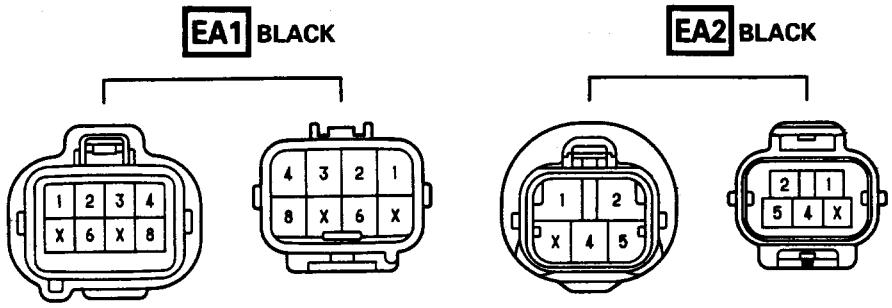

CODE	JOINING WIRE HARNESS AND WIRE HARNESS (CONNECTOR LOCATION)
EA1	ENGINE WIRE AND ENGINE ROOM MAIN WIRE (NEAR THE R/B NO.2)
EA2	

: Location of Connector Joining Wire Harness and Wire Harness
: Location of Ground Points

[2JZ-GE]

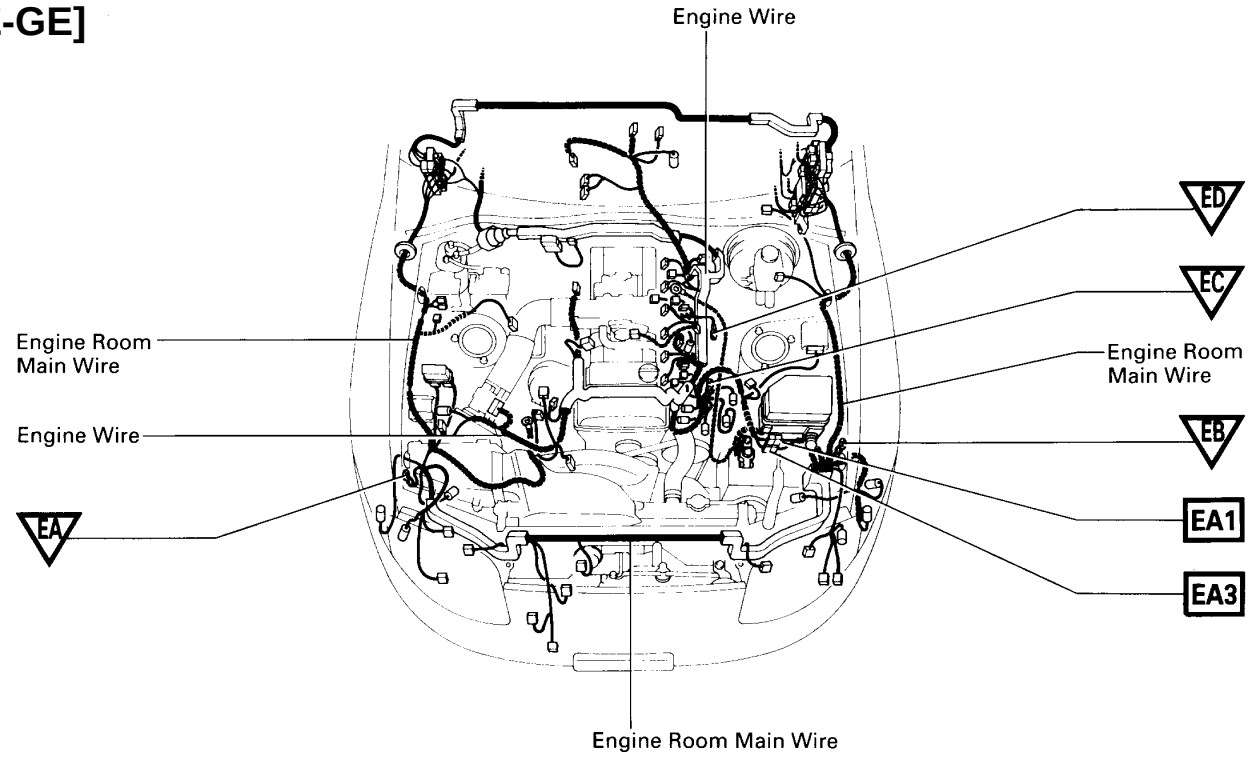

: Location of Splice Points

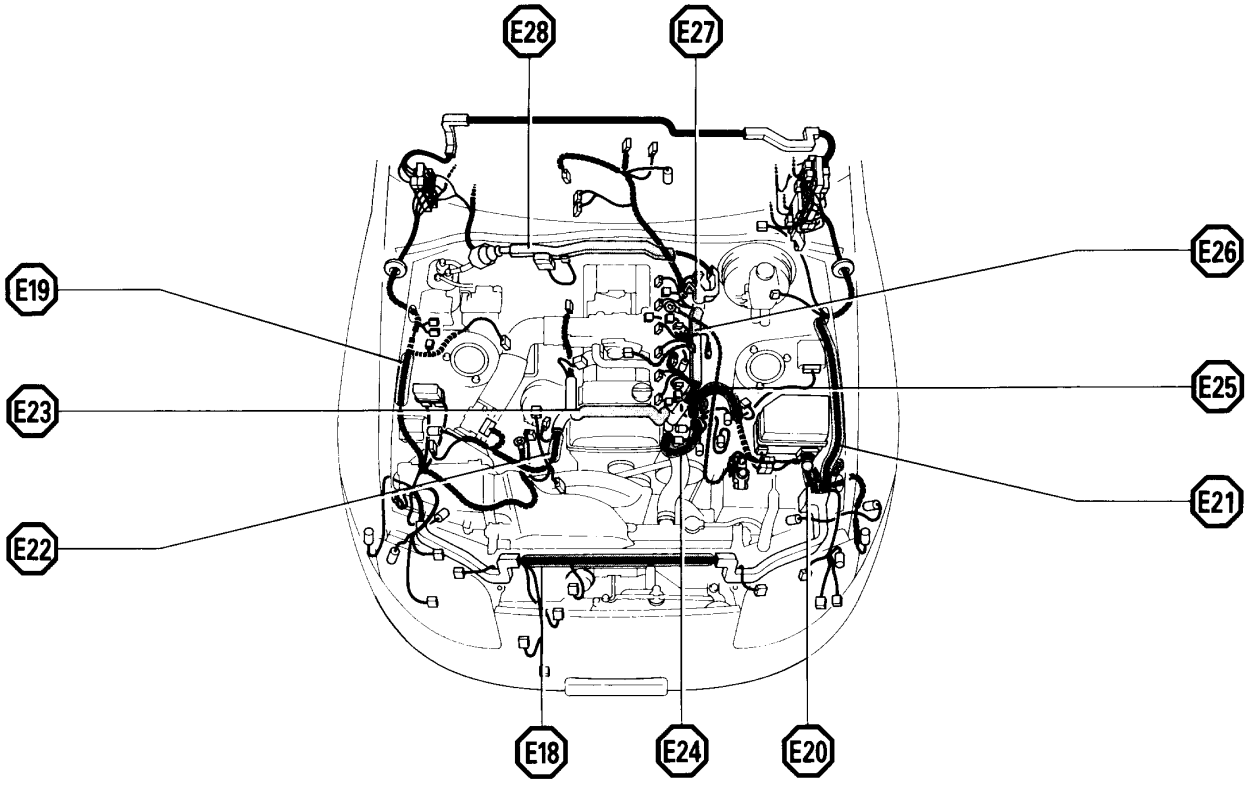

Connector Joining Wire Harness and Wire Harness

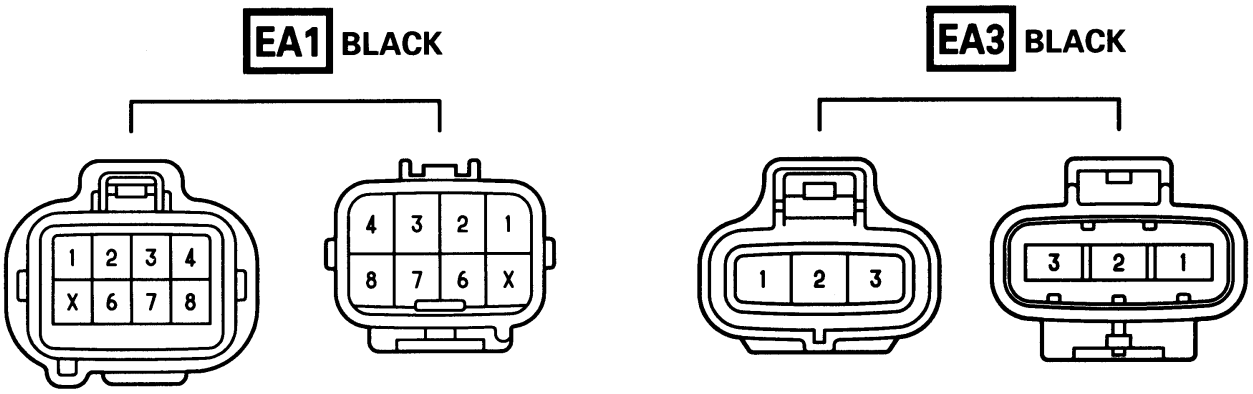

CODE	JOINING WIRE HARNESS AND WIRE HARNESS (CONNECTOR LOCATION)
EA1	ENGINE WIRE AND ENGINE ROOM MAIN WIRE (NEAR THE R/B NO.2)
EA3	

□ : Location of Connector Joining Wire Harness and Wire Harness

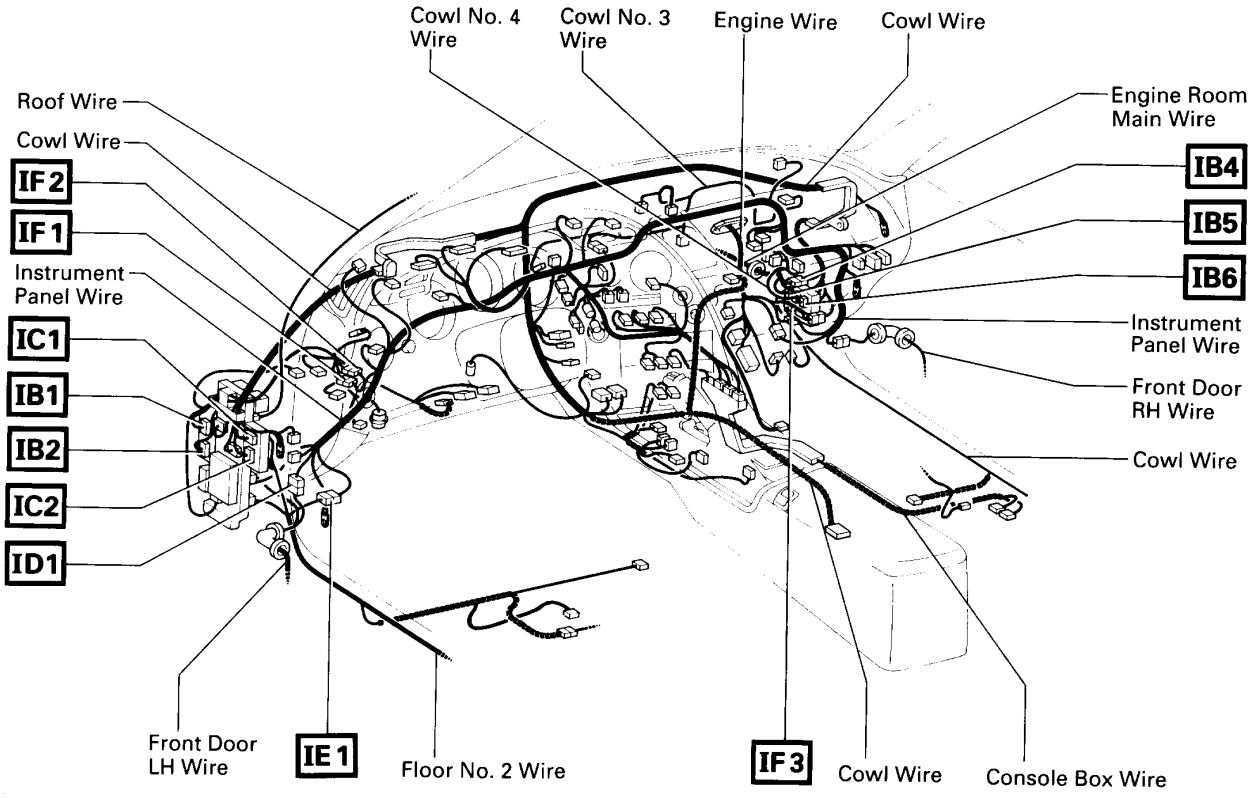

▽ : Location of Ground Points

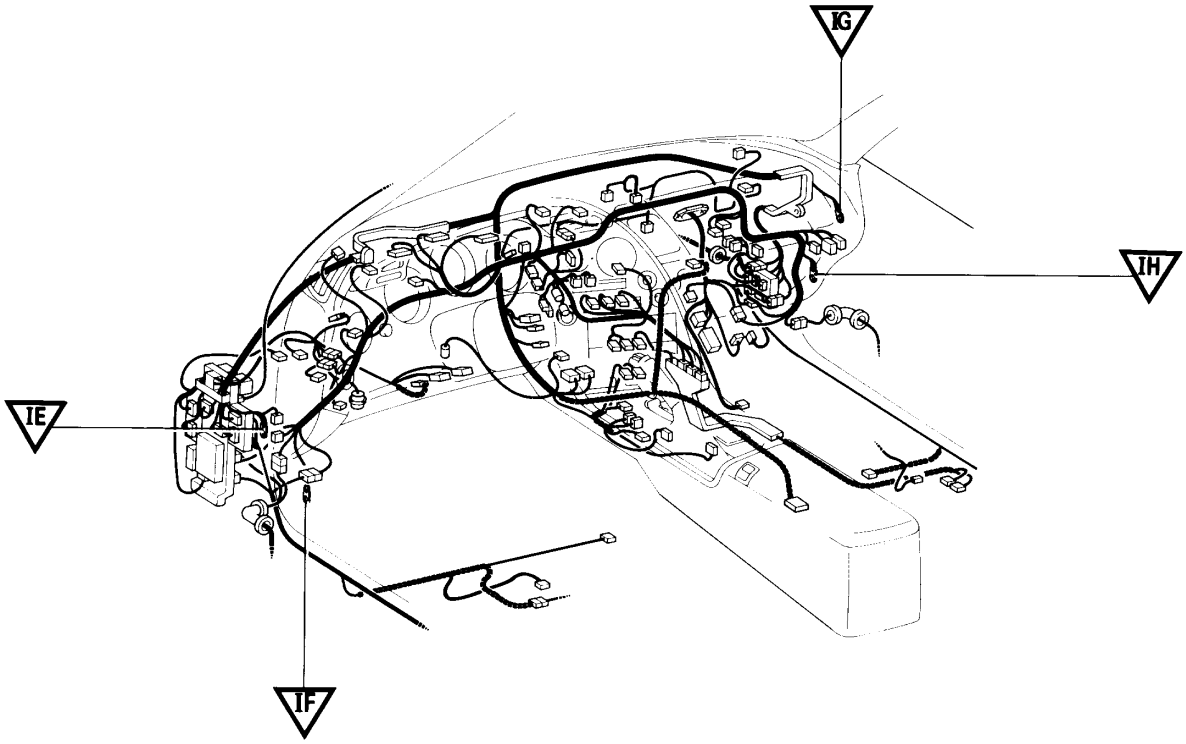

Connector Joining Wire Harness and Wire Harness

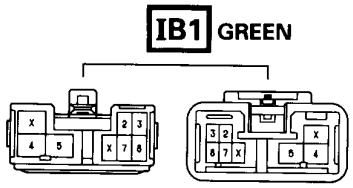

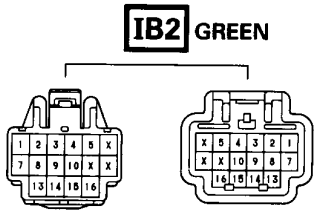

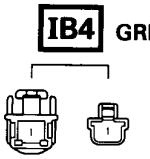

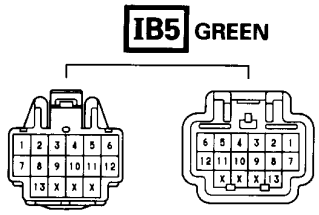

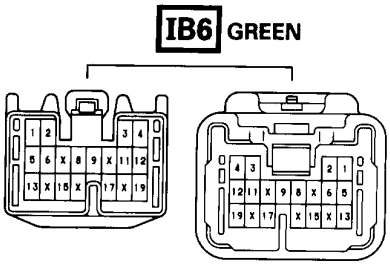

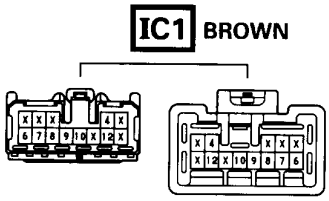

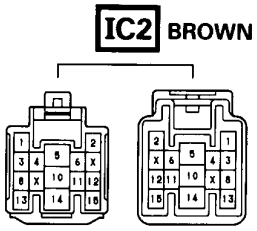

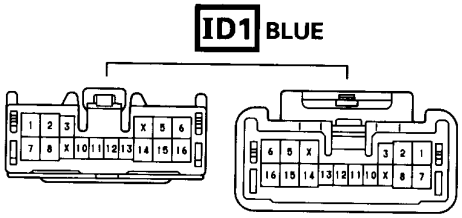

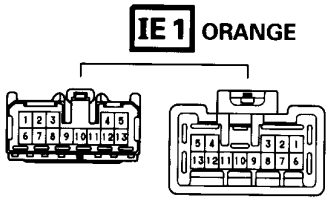

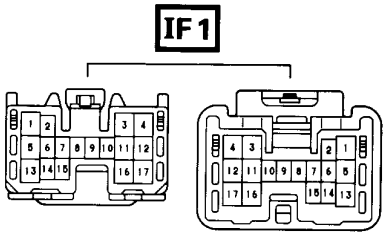

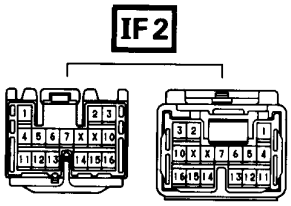

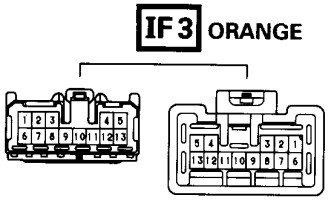

CODE	JOINING WIRE HARNESS AND WIRE HARNESS (CONNECTOR LOCATION)
IB1	ENGINE ROOM MAIN WIRE AND COWL WIRE (LEFT KICK PANEL)
IB2	
IB4	ENGINE ROOM MAIN WIRE AND COWL WIRE (RIGHT KICK PANEL)
IB5	
IB6	
IC1	FLOOR NO.2 WIRE AND COWL WIRE (LEFT KICK PANEL)
IC2	
ID1	FRONT DOOR LH WIRE AND INSTRUMENT PANEL WIRE (LEFT KICK PANEL)
IE1	INSTRUMENT PANEL WIRE AND FLOOR NO.2 WIRE (LEFT KICK PANEL)
IF1	INSTRUMENT PANEL WIRE AND COWL WIRE (INSTRUMENT PANEL REINFORCEMENT LH)
IF2	
IF3	INSTRUMENT PANEL WIRE AND COWL WIRE (RIGHT KICK PANEL)

: Location of Connector Joining Wire Harness and Wire Harness

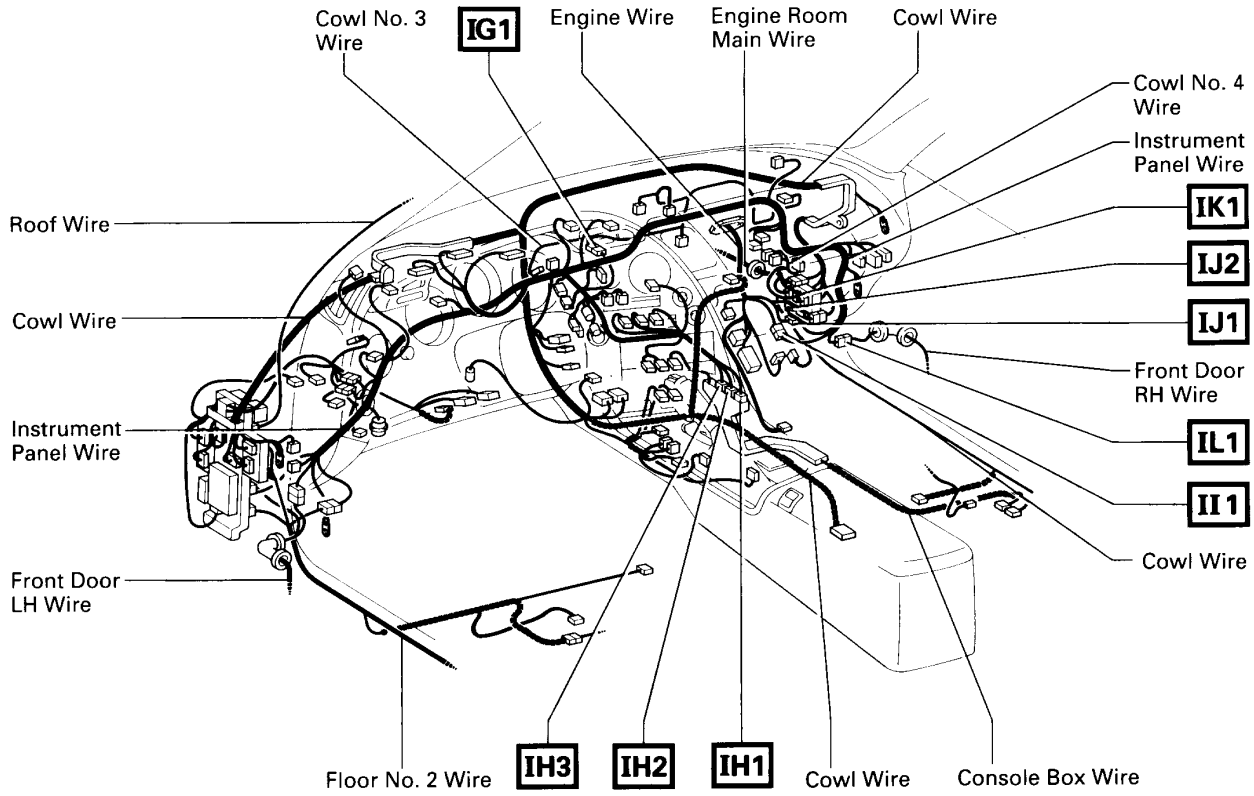

: Location of Splice Points

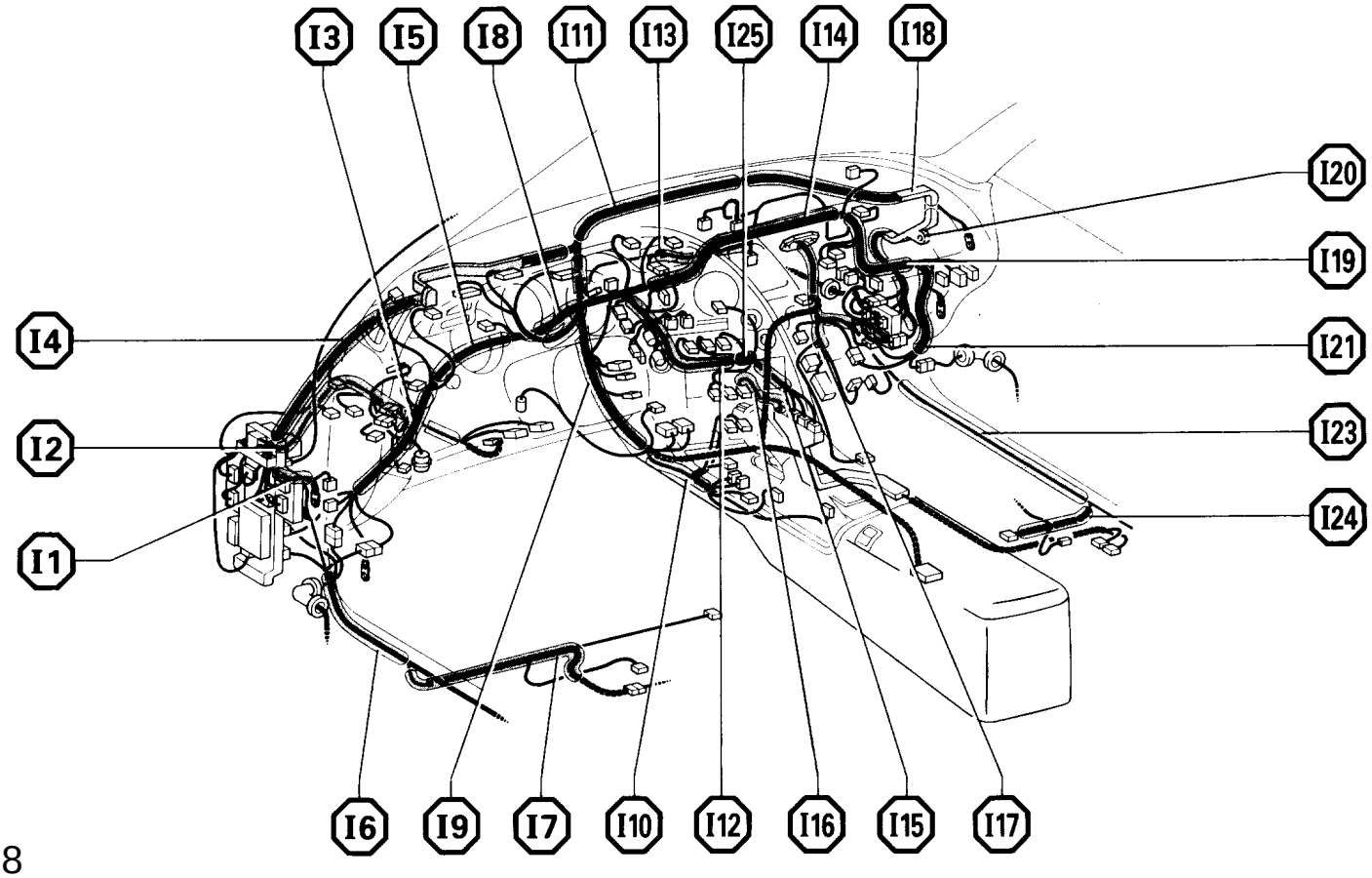

Connector Joining Wire Harness and Wire Harness

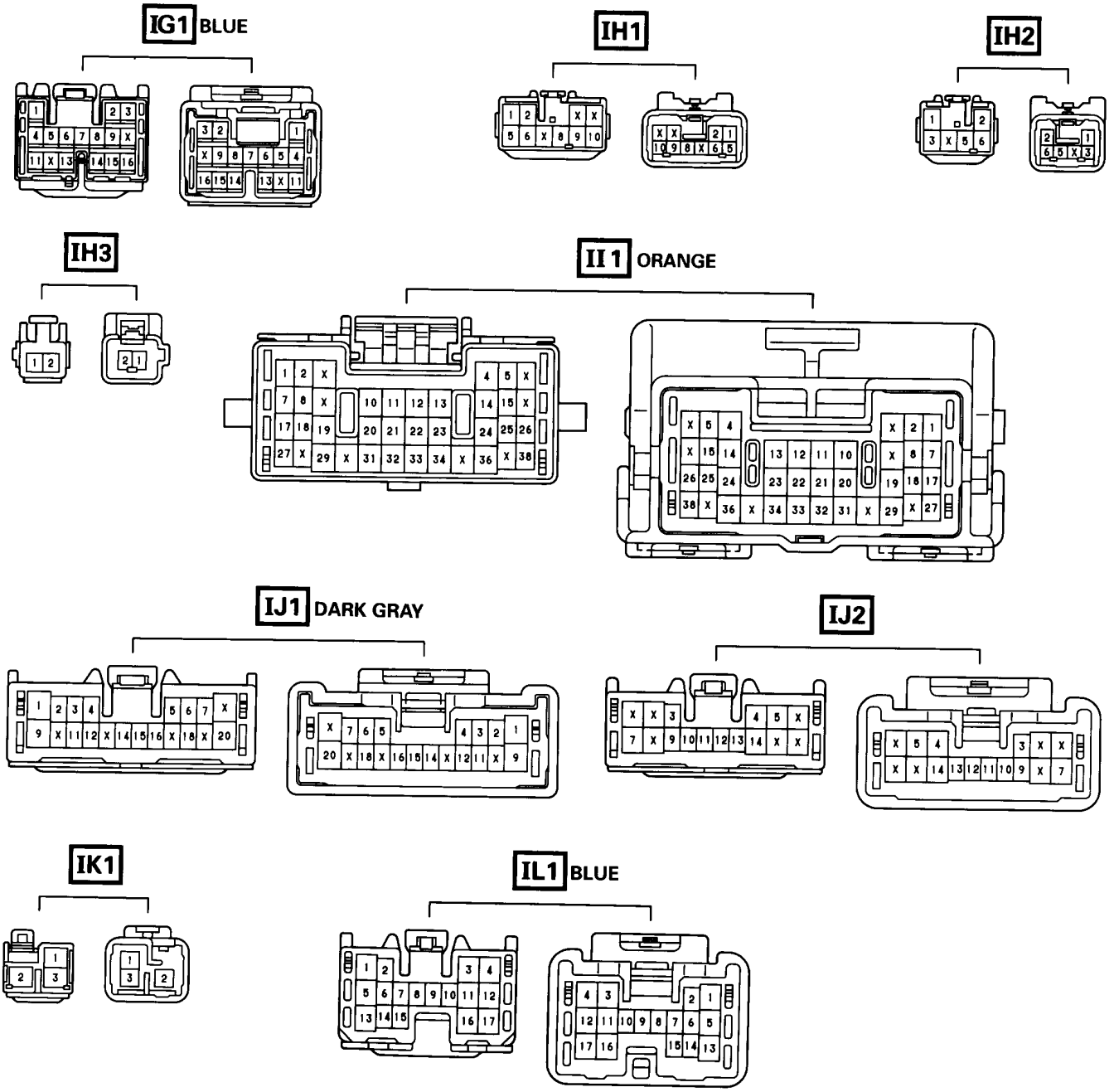

CODE	JOINING WIRE HARNESS AND WIRE HARNESS (CONNECTOR LOCATION)
IG1	INSTRUMENT PANEL WIRE AND COWL NO.3 WIRE (BEHIND HEATER CONTROL SW)
IH1	INSTRUMENT PANEL WIRE AND CONSOLE BOX WIRE (UNDER THE INSTRUMENT PANEL BRACE RH)
IH2	
IH3	
II1	ENGINE WIRE AND INSTRUMENT PANEL WIRE (RIGHT KICK PANEL)
IJ1	ENGINE WIRE AND COWL WIRE (RIGHT KICK PANEL)
IJ2	
IK1	COWL NO.4 WIRE AND COWL WIRE (RIGHT KICK PANEL)
IL1	FRONT DOOR RH WIRE AND INSTRUMENT PANEL WIRE (RIGHT KICK PANEL)

▭ : Location of Connector Joining Wire Harness and Wire Harness

▽ : Location of Ground Points

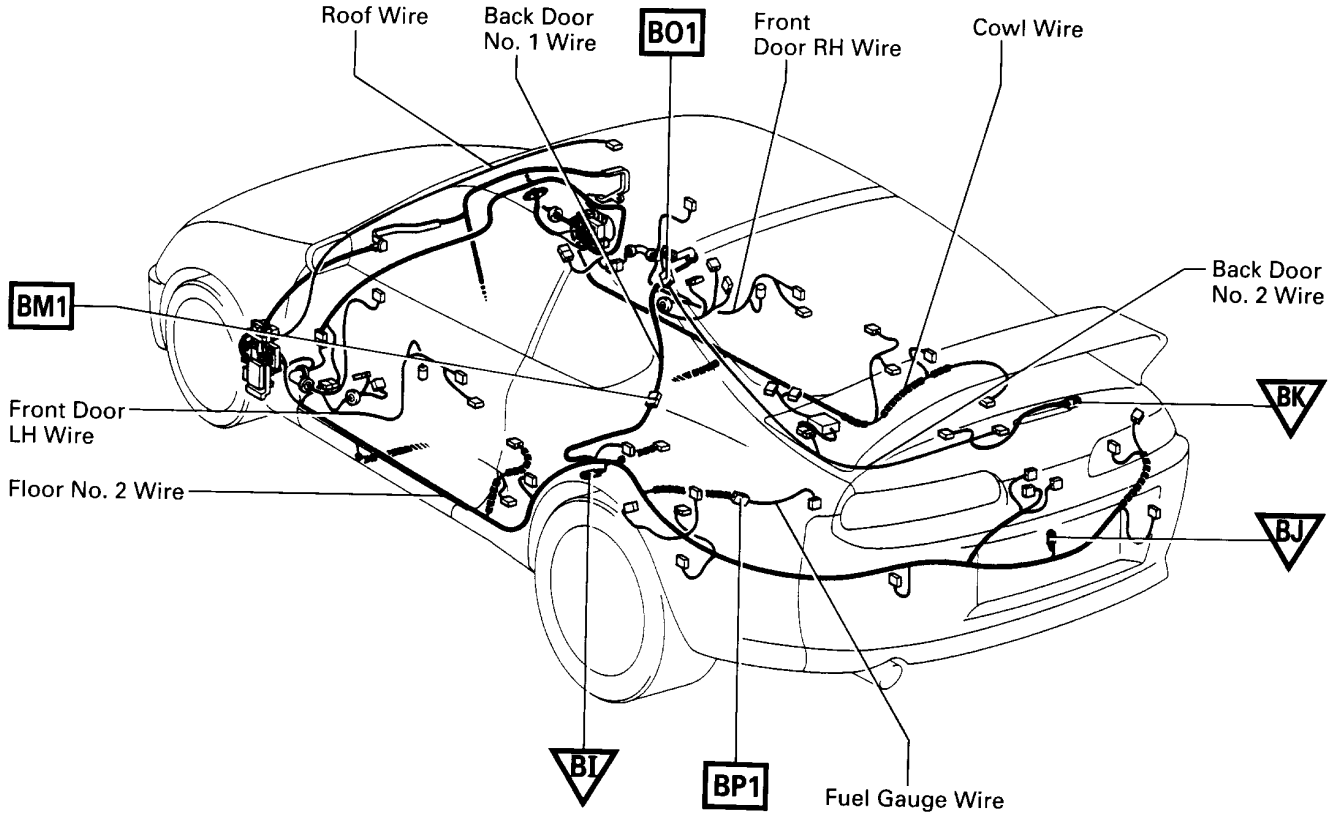

◯ : Location of Splice Points

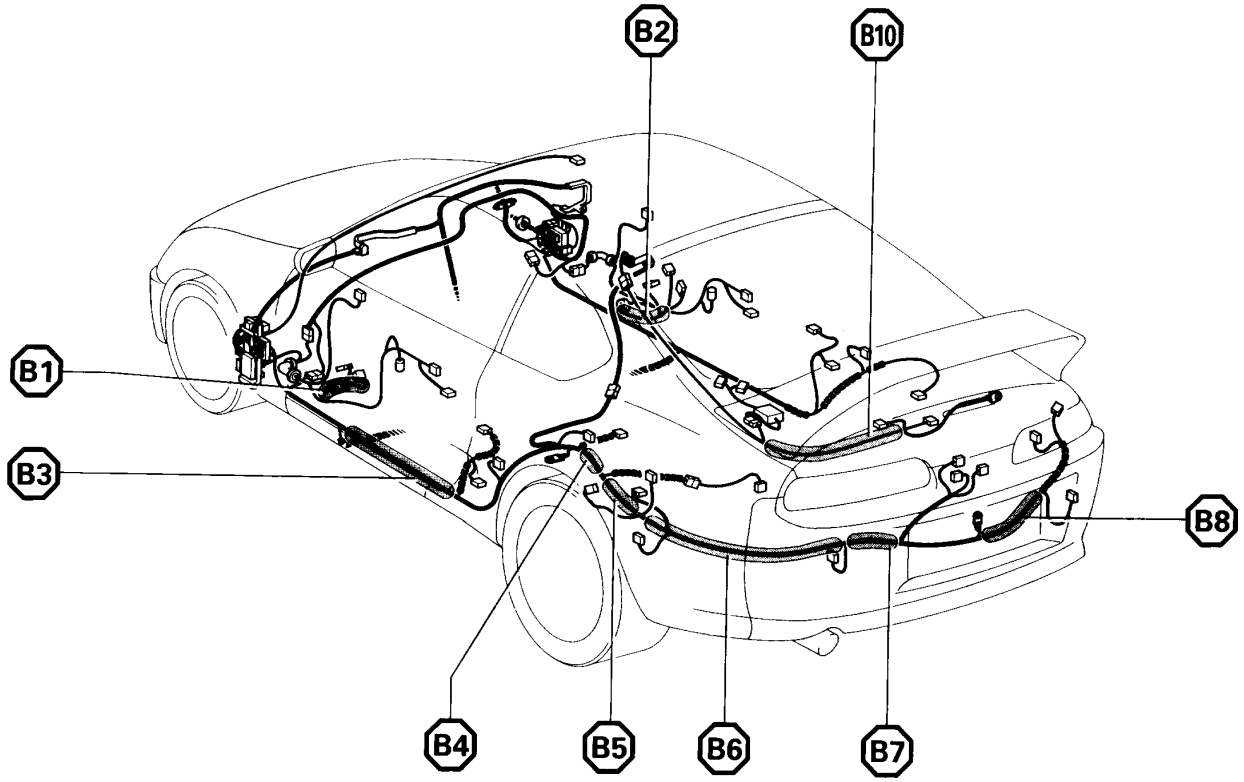

Connector Joining Wire Harness and Wire Harness

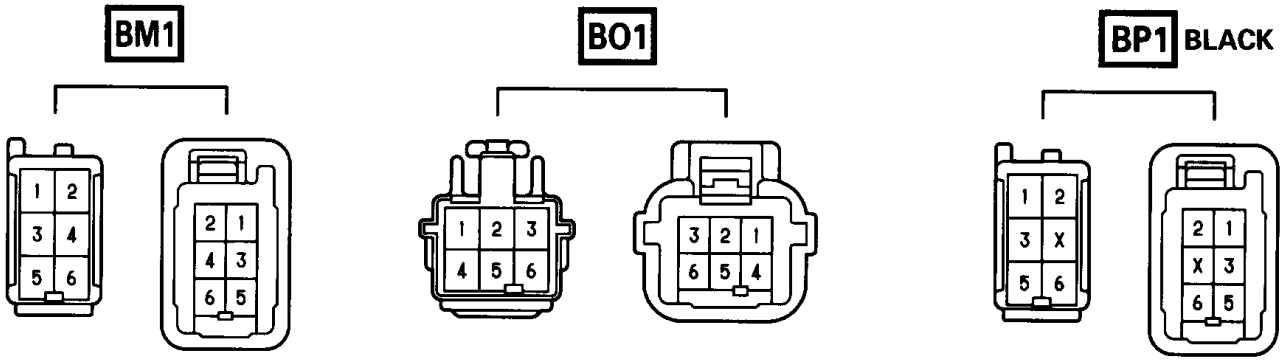

CODE	JOINING WIRE HARNESS AND WIRE HARNESS (CONNECTOR LOCATION)
BM1	BACK DOOR NO. 1 WIRE AND FLOOR NO.2 WIRE (LEFT SIDE OF PACKAGE TRAY TRIM)
BO1	BACK DOOR NO. 2 WIRE AND BACK DOOR NO. 1 WIRE (BACK DOOR UPPER LEFT)
BP1	FUEL GAUGE WIRE AND FLOOR NO.2 WIRE (LUGGAGE ROOM FRONT LH)

□ : Location of Connector Joining Wire Harness and Wire Harness

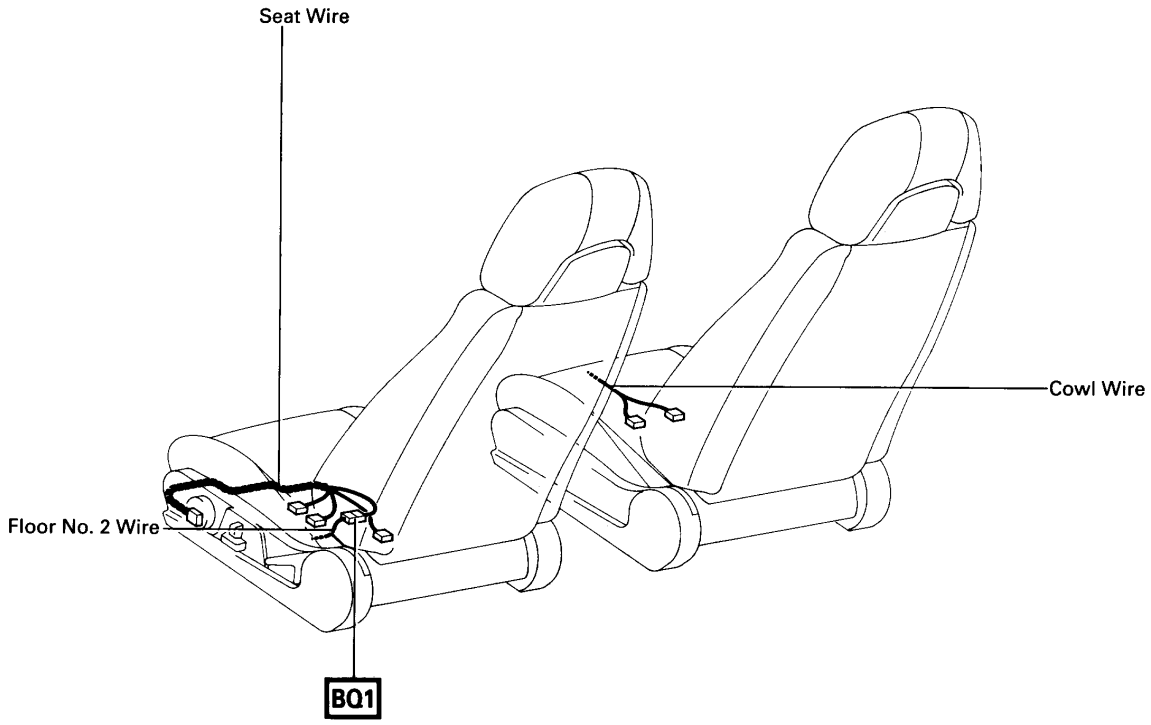

⬡ : Location of Splice Points

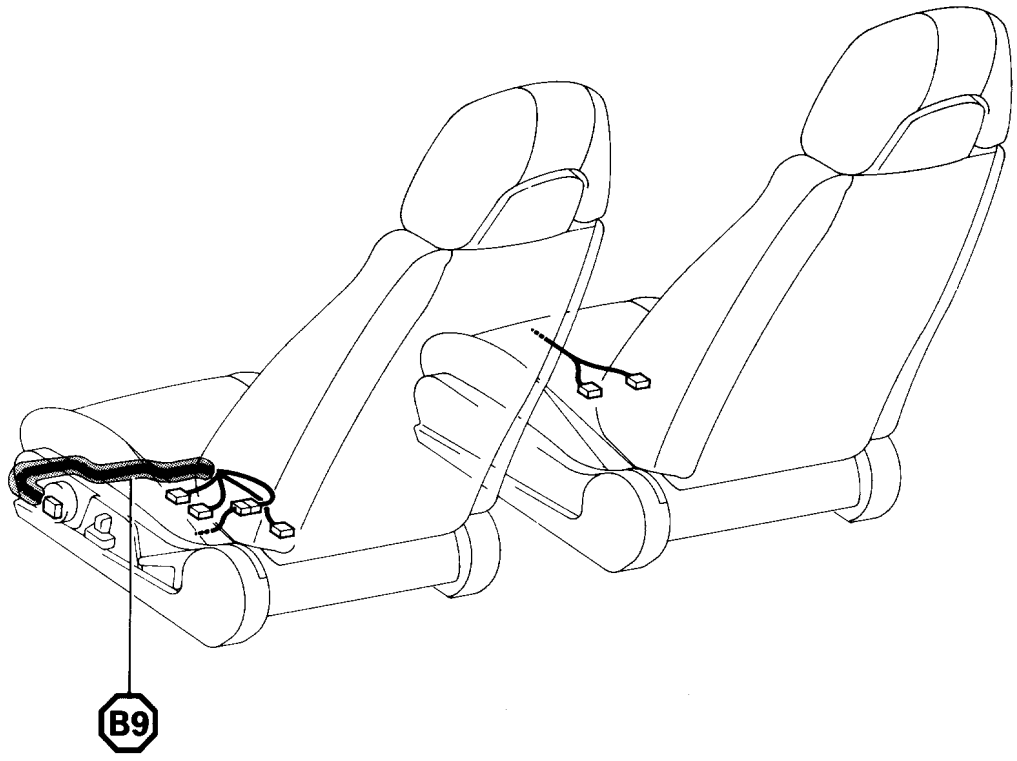

Connector Joining Wire Harness and Wire Harness

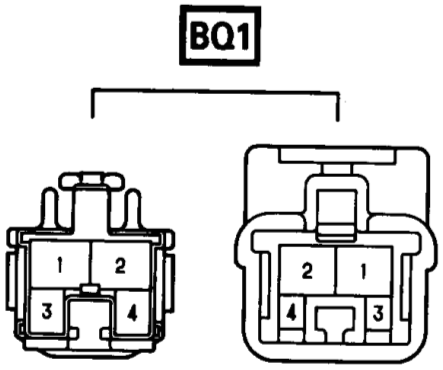

CODE	JOINING WIRE HARNESS AND WIRE HARNESS (CONNECTOR LOCATION)
BQ1	FLOOR NO. 2 WIRE AND SEAT WIRE (UNDER THE FRONT LH SEAT)

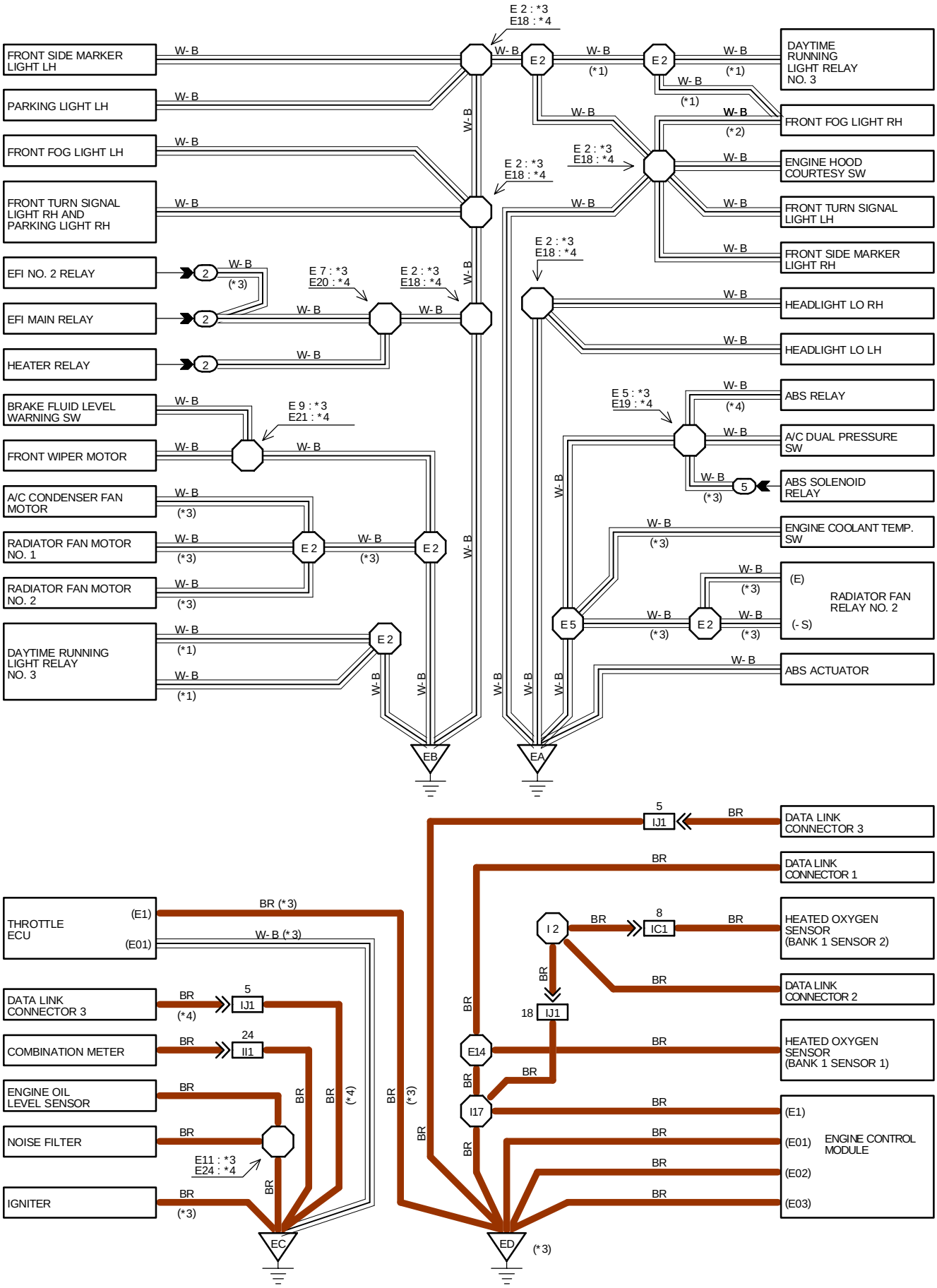
FRONT SIDE MARKER LIGHT LH
PARKING LIGHT LH
FRONT FOG LIGHT LH
FRONT TURN SIGNAL LIGHT RH AND PARKING LIGHT RH
EFI NO. 2 RELAY
EFI MAIN RELAY
HEATER RELAY
BRAKE FLUID LEVEL WARNING SW
FRONT WIPER MOTOR
A/C CONDENSER FAN MOTOR
RADIATOR FAN MOTOR NO. 1
RADIATOR FAN MOTOR NO. 2
DAYTIME RUNNING LIGHT RELAY NO. 3
DAYTIME RUNNING LIGHT RELAY NO. 3
FRONT FOG LIGHT RH
ENGINE HOOD COURTESY SW
FRONT TURN SIGNAL LIGHT LH
FRONT SIDE MARKER LIGHT RH
HEADLIGHT LO RH
HEADLIGHT LO LH
ABS RELAY
A/C DUAL PRESSURE SW
ABS SOLENOID RELAY
ENGINE COOLANT TEMP. SW
RADIATOR FAN RELAY NO. 2
ABS ACTUATOR
E 2 : *3
E18 : *4
E 7 : *3
E20 : *4
E 9 : *3
E21 : *4
E 5 : *3
E19 : *4
E11 : *3
E24 : *4
W- B
BR
(*1)
(*2)
(*3)
(*4)
(E)
(- S)
EA
EB
EC
ED
THROTTLE ECU
(E1)
(E01)
BR (*3)
W- B (*3)
DATA LINK CONNECTOR 3
COMBINATION METER
ENGINE OIL LEVEL SENSOR
NOISE FILTER
IGNITER
DATA LINK CONNECTOR 1
DATA LINK CONNECTOR 2
HEATED OXYGEN SENSOR (BANK 1 SENSOR 2)
HEATED OXYGEN SENSOR (BANK 1 SENSOR 1)
ENGINE CONTROL MODULE
(E02)
(E03)
IJ1
II1
IC1
I2
I17
E14

*1 : CANADA
*2 : USA
*3 : 2JZ- GTE
*4 : 2JZ- GE

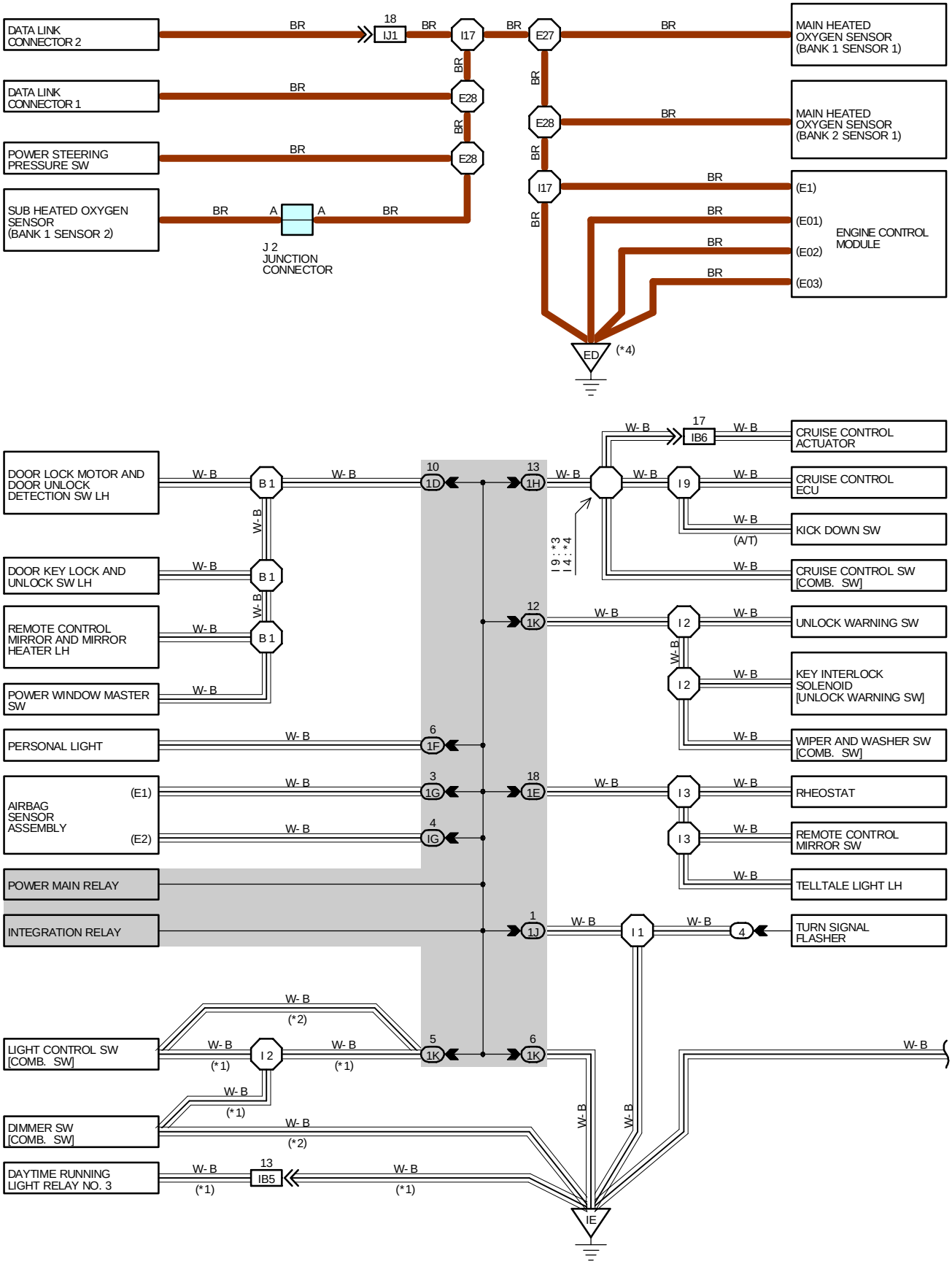

J GROUND POINT

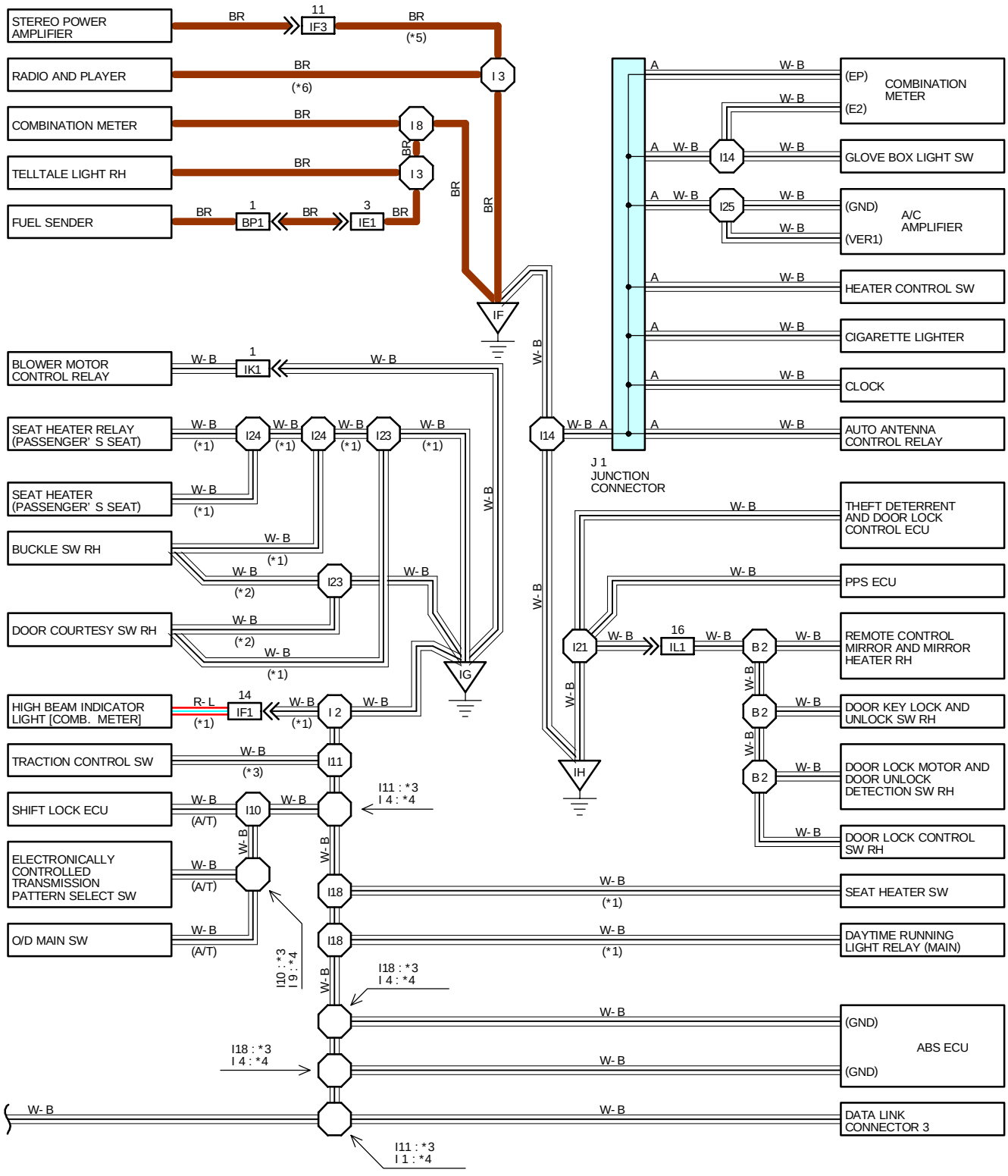

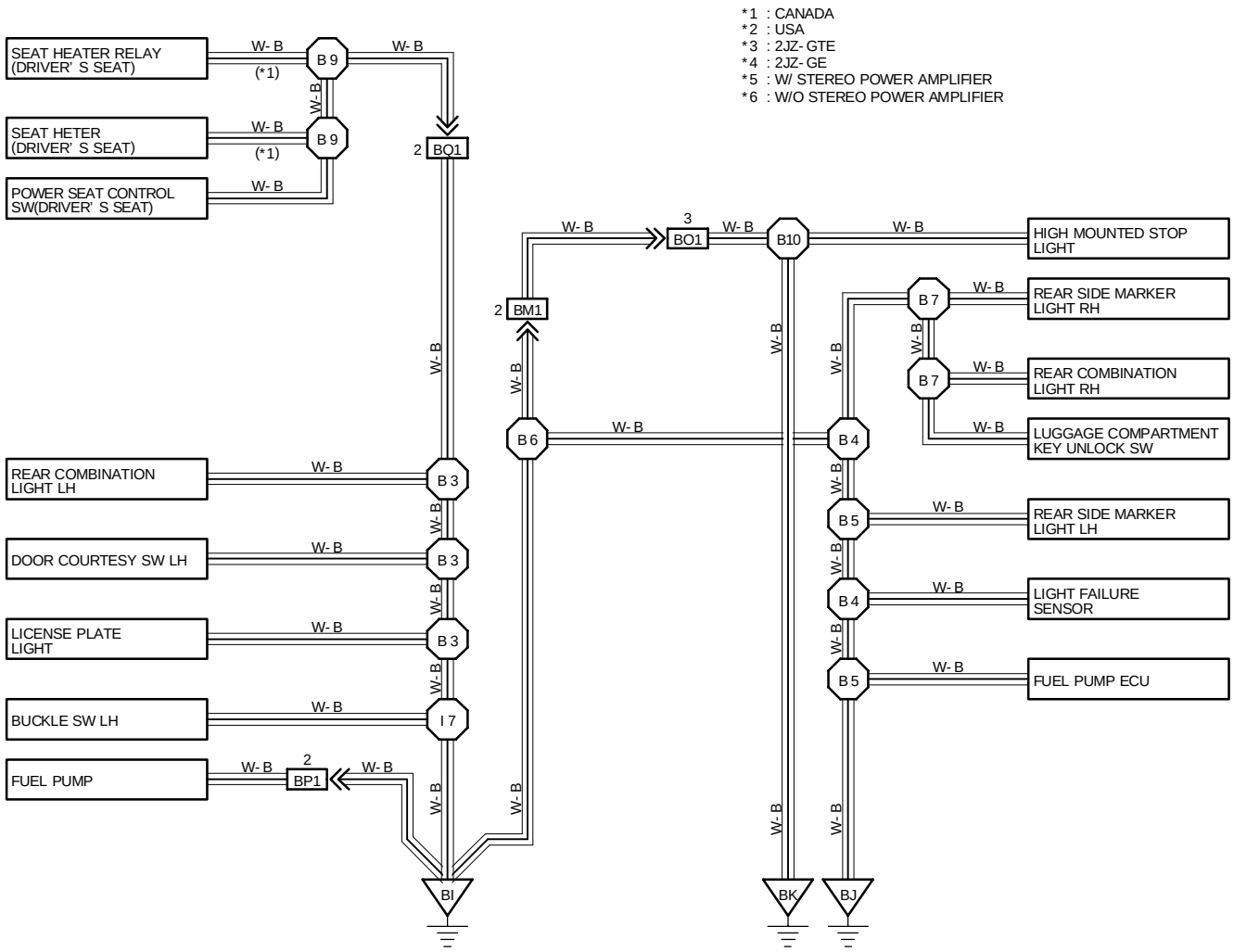
*1 : CANADA
*2 : USA
*3 : 2JZ- GTE
*4 : 2JZ- GE
*5 : W/ STEREO POWER AMPLIFIER
*6 : W/O STEREO POWER AMPLIFIER
SEAT HEATER RELAY (DRIVER' S SEAT)
SEAT HETER (DRIVER' S SEAT)
POWER SEAT CONTROL SW(DRIVER' S SEAT)
REAR COMBINATION LIGHT LH
DOOR COURTESY SW LH
LICENSE PLATE LIGHT
BUCKLE SW LH
FUEL PUMP
HIGH MOUNTED STOP LIGHT
REAR SIDE MARKER LIGHT RH
REAR COMBINATION LIGHT RH
LUGGAGE COMPARTMENT KEY UNLOCK SW
REAR SIDE MARKER LIGHT LH
LIGHT FAILURE SENSOR
FUEL PUMP ECU
W- B
(*1)
B 9
2 BQ1
3 BO1
2 BM1
B10
B 7
B 6
B 4
B 5
B 3
I 7
2 BP1
BI
BK
BJ

J GROUND POINT

: PARTS LOCATION

CODE	SEE PAGE	CODE	SEE PAGE	CODE	SEE PAGE
J1	29	J2	29		

: RELAY BLOCKS

CODE	SEE PAGE	RELAY BLOCKS (RELAY BLOCK LOCATION)
2	22	R/B NO. 2 (ENGINE COMPARTMENT LEFT)
4	23	R/B NO. 4 (LEFT KICK PANEL)
5	23	R/B NO. 5 (ENGINE COMPARTMENT RIGHT)

: JUNCTION BLOCK AND WIRE HARNESS CONNECTOR

CODE	SEE PAGE	JUNCTION BLOCK AND WIRE HARNESS (CONNECTOR LOCATION)
1D	20	FRONT DOOR LH WIRE AND J/B NO. 1 (LEFT KICK PANEL)
1E	20	INSTRUMENT PANEL WIRE AND J/B NO. 1 (LEFT KICK PANEL)
1F	20	ROOF WIRE AND J/B NO. 1 (LEFT KICK PANEL)
1G	20	COWL WIRE AND J/B NO. 1 (LEFT KICK PANEL)
1H		
1J		
1K		

: CONNECTOR JOINING WIRE HARNESS AND WIRE HARNESS

CODE	SEE PAGE	JOINING WIRE HARNESS AND WIRE HARNESS (CONNECTOR LOCATION)
IB5	36	ENGINE ROOM MAIN WIRE AND COWL WIRE (RIGHT KICK PANEL)
IC1	36	FLOOR NO. 2 WIRE AND COWL WIRE (LEFT KICK PANEL)
IE1	36	INSTRUMENT PANEL WIRE AND FLOOR NO. 2 WIRE (LEFT KICK PANEL)
IF1	36	INSTRUMENT PANEL WIRE AND COWL WIRE (INSTRUMENT PANEL REINFORCEMENT LH)
IF3	36	INSTRUMENT PANEL WIRE AND COWL WIRE (RIGHT KICK PANEL)
II1	38	ENGINE WIRE AND INSTRUMENT PANEL WIRE (RIGHT KICK PANEL)
IJ1	38	ENGINE WIRE AND COWL WIRE (RIGHT KICK PANEL)
IK1	38	COWL NO. 4 WIRE AND COWL WIRE (RIGHT KICK PANEL)
IL1	38	FRONT DOOR RH WIRE AND INSTRUMENT PANEL WIRE
BM1	40	BACK DOOR NO. 1 WIRE AND FLOOR NO. 2 WIRE (LEFT SIDE OF PACKAGE TRAY TRIM)
BO1	40	BACK DOOR NO. 2 WIRE AND BACK DOOR NO. 1 WIRE
BP1	40	FUEL GAUGE WIRE AND FLOOR NO. 2 WIRE (LUGGAGE ROOM FRONT LH)
BQ1	42	FLOOR NO. 2 WIRE AND SEAT WIRE (UNDER THE FRONT LH SEAT)

: GROUND POINTS

CODE	SEE PAGE	GROUND POINTS LOCATION
EA	32 (2JZ-GTE) 34 (2JZ-GE)	FRONT SIDE OF RIGHT FENDER
EB	32 (2JZ-GTE) 34 (2JZ-GE)	FRONT SIDE OF LEFT FENDER
EC	32 (2JZ-GTE) 34 (2JZ-GE)	FRONT SIDE OF INTAKE MANIFOLD
ED	32 (2JZ-GTE) 34 (2JZ-GE)	REAR SIDE OF INTAKE MANIFOLD
IE	36	LEFT KICK PANEL
IF		
IG	36	RIGHT KICK PANEL
IH		
BI	40	LEFT QUARTER PILLAR
BJ	40	LOWER BACK PANEL CENTER
BK	40	RIGHT SIDE OF HIGH MOUNTED STOP LIGHT

: **SPLICE POINTS**

CODE	SEE PAGE	WIRE HARNESS WITH SPLICE POINTS	CODE	SEE PAGE	WIRE HARNESS WITH SPLICE POINTS
E2	32	ENGINE ROOM MAIN WIRE	I10	38	COWL WIRE
E5			I11		
E7			I14	38	INSTRUMENT PANEL WIRE
E9			I17	38	ENGINE WIRE
E14	32	ENGINE WIRE	I18	38	COWL WIRE
E18	34	ENGINE ROOM MAIN WIRE	I21	38	INSTRUMENT PANEL WIRE
E19			I23	38	COWL WIRE
E20			I24		
E21			I25	38	INSTRUMENT PANEL WIRE
E24	34	ENGINE WIRE	B1	40	FRONT DOOR LH WIRE
E27			B2	40	FRONT DOOR RH WIRE
E28			B3	40	FLOOR NO. 2 WIRE
I1	38	COWL WIRE	B4		
I2			B5		
I3	38	INSTRUMENT PANEL WIRE	B6		
I4	38	COWL WIRE	B7		
I7	38	FLOOR NO. 2 WIRE	B9	42	SEAT WIRE
I8	38	INSTRUMENT PANEL WIRE	B10	40	BACK DOOR NO. 2 WIRE
I9	38	COWL WIRE			

J 1

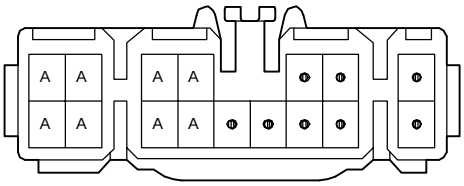

(HINT : SEE PAGE 7)

J 2

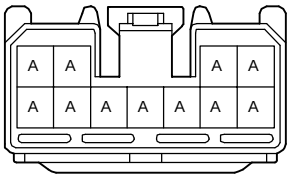

(HINT : SEE PAGE 7)

H POWER SOURCE (Current Flow Chart)

The chart below shows the route by which current flows from the battery to each electrical source (Fusible Link, Circuit Breaker, Fuse, etc.) and other parts.

The next page and following pages show the parts to which each electrical source outputs current.

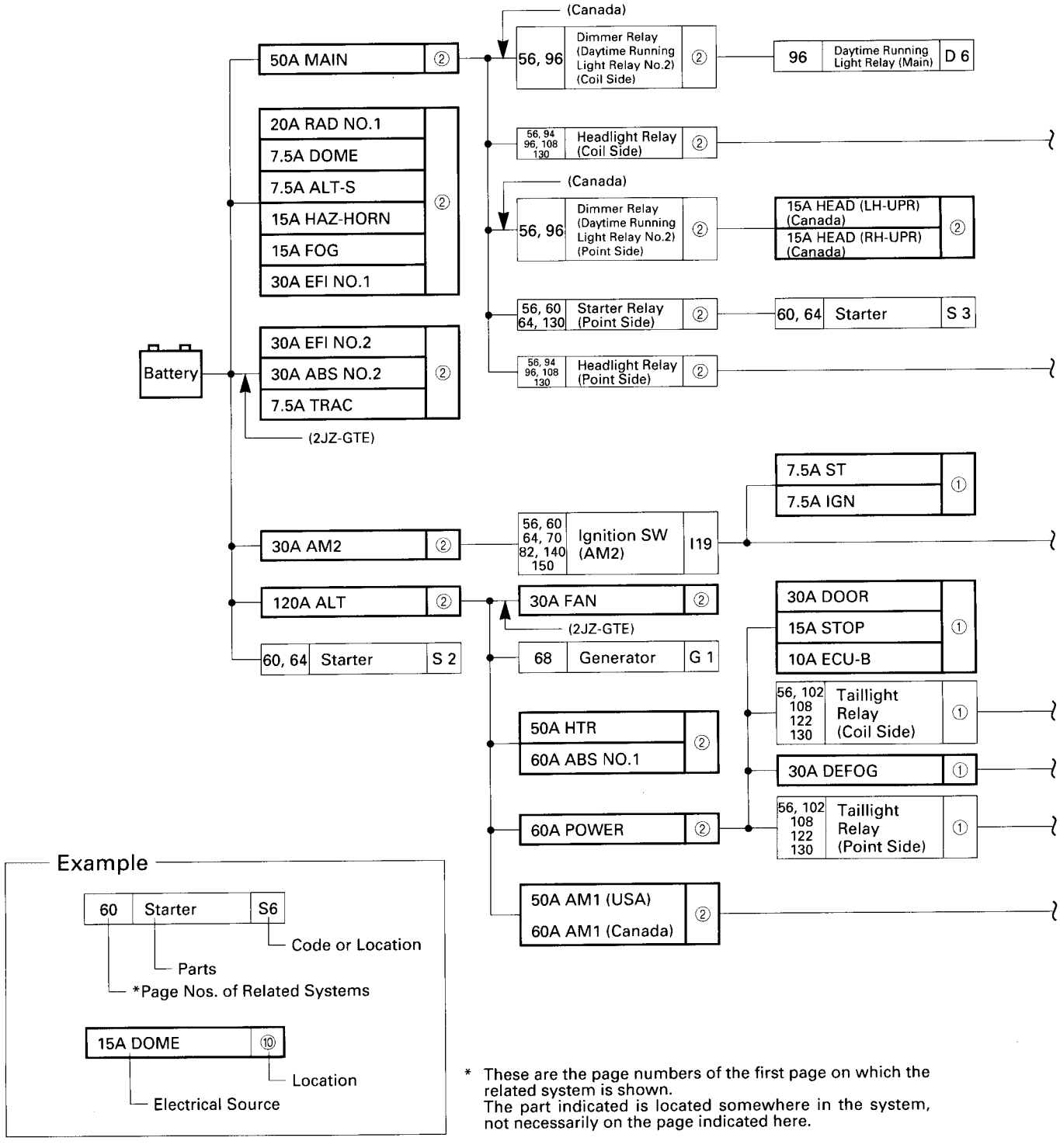

[LOCATION] ①: J/B No. 1 (See page 20) ②: R/B No.2 (See page 22)

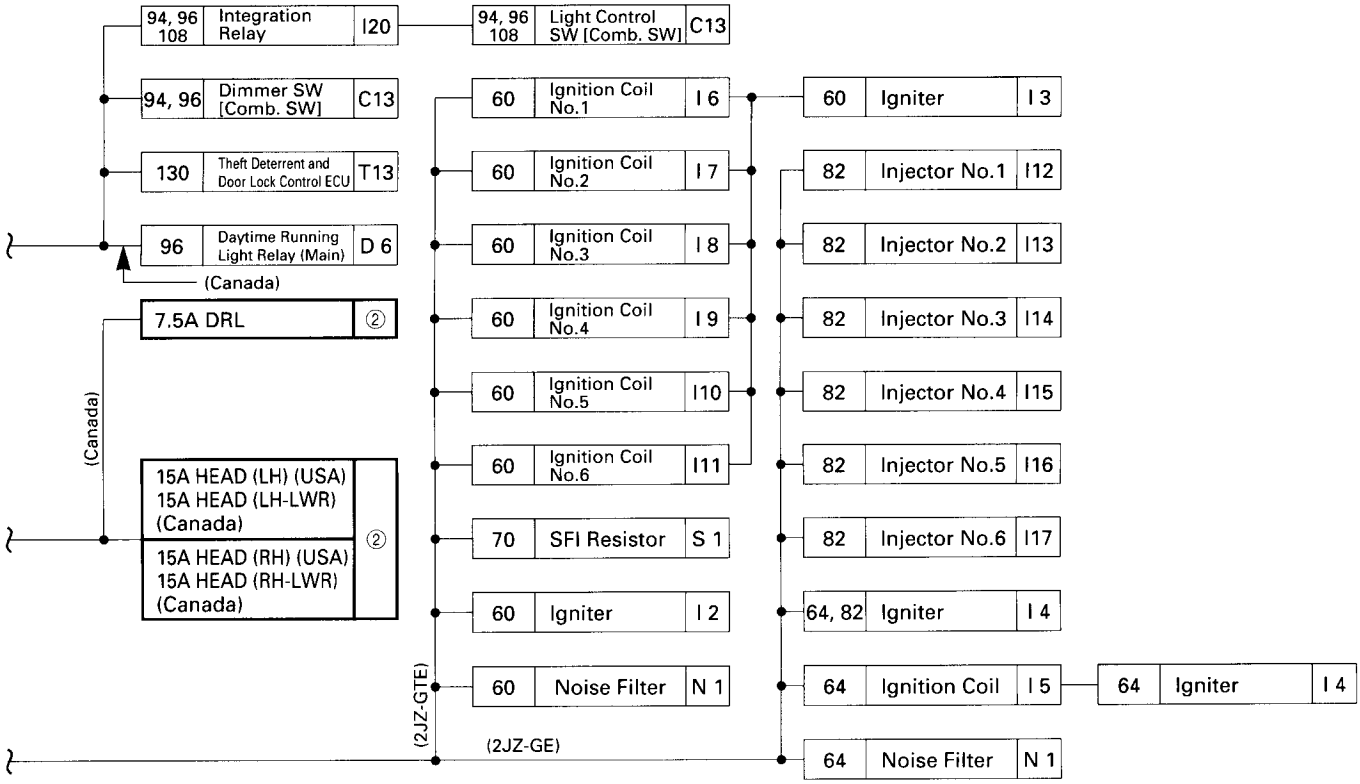

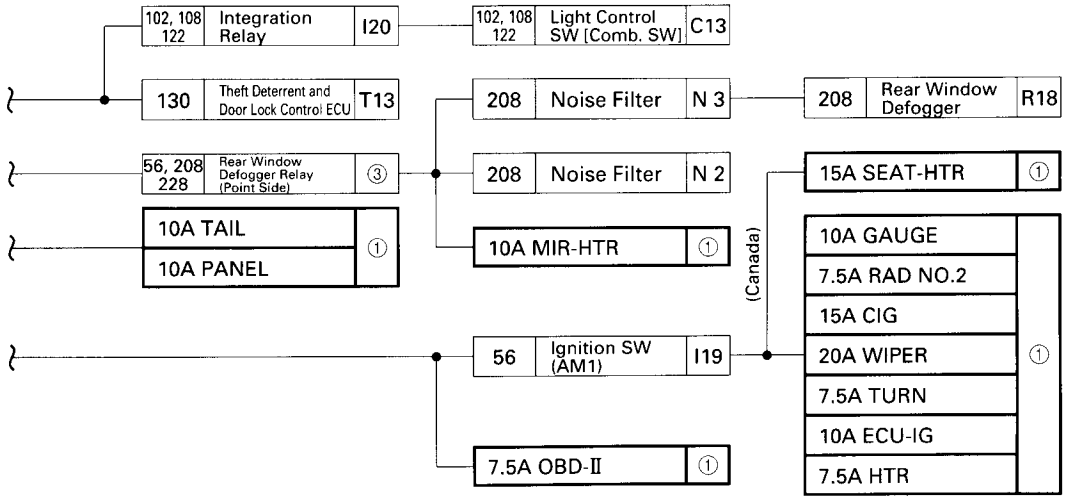

③: R/B No. 4 (See page 23)

H POWER SOURCE (Current Flow Chart)

Location	CB or Fuse		*Page Nos. of Related Systems	228	228	228	159 164	159	159	228	208 228	159	159	164	164	228	122	210	210	197	116	220	228	206	206
			Parts	A/C Condenser Fan Motor	A/C Single Pressure SW [A/C Triple Pressure SW]	A/C Magnetic Clutch and Lock Sensor	ABS Actuator	ABS Relay		A/C Amplifier		ABS ECU				Air Inlet Control Servo Motor	Ashtray Illumination	Auto Antenna Control Relay	Auto Antenna Motor	Airbag Sensor Assembly	Back-Up Light SW (M/T)	Brake Fluid Level Warning SW	Blower Motor Control Relay	Buckle SW LH	Buckle SW RH
			Code or Location	A 2	A 3	A 4	A 6	A 8	A 9	A12	A14	A18	A19	A20	A21	A24	A29	A30	A33	A34	B 1	B 2	B 4	B 6	B 7
①	7.5A	HTR			●	●				●	●					●									
	7.5A	IGN																		●					
	7.5A	OBD-II																							
	7.5A	RAD NO.2																●							
	7.5A	ST																							
	7.5A	TURN																							
	10A	ECU-B									●									●					
	10A	ECU-IG										●		●				●						●	●
	10A	GAUGE					●		●		●	●	●	●	●							●	●		
	10A	MIR-HTR																							
	10A	PANEL															●								
	10A	TAIL																							
	15A	CIG								●										●					
	15A	SEAT-HTR																							
	15A	STOP										●		●											
	20A	WIPER																							
	30A	DEFOG																							
	30A	DOOR																							
②	7.5A	ALT-S																							
	7.5A	DOME																							
	7.5A	DRL																							
	7.5A	TRAC																							
	15A	FOG																							
	15A	HAZ-HORN																							
	15A	HEAD (LH) *2																							
	15A	HEAD (LH-LWR) *1																							
	15A	HEAD (LH-UPR) *1																							
	15A	HEAD (RH) *2																							
	15A	HEAD (RH-LWR) *1																							
	15A	HEAD (RH-UPR) *1																							
	20A	RAD NO.1																●	●						
	30A	EFI NO.1																							
	30A	EFI NO.2																							
	30A	FAN		●																	●				
	50A	HTR																					●		
	60A	ABS NO.1					●	●	●				●	●	●										

* These are the page numbers of the first page on which the related system is shown.
The part indicated is located somewhere in the system, not necessarily on the page indicated here.

[LOCATION] ①:J/B No. 1 (See page 20) ②:R/B No.2 (See page 22) ③:R/B No.4 (See page 23)

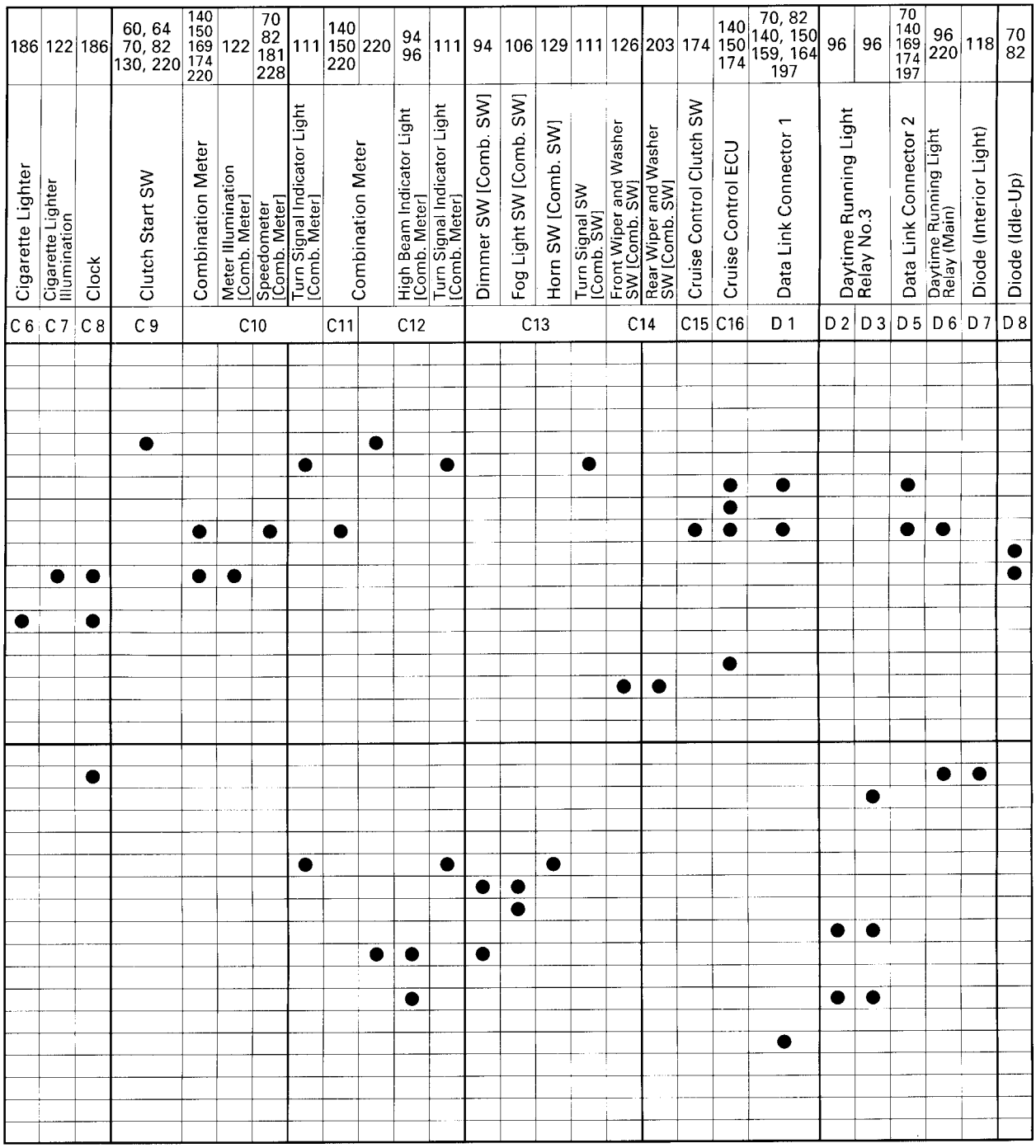

④:R/B No. 5 (See page 23)

H POWER SOURCE (Current Flow Chart)

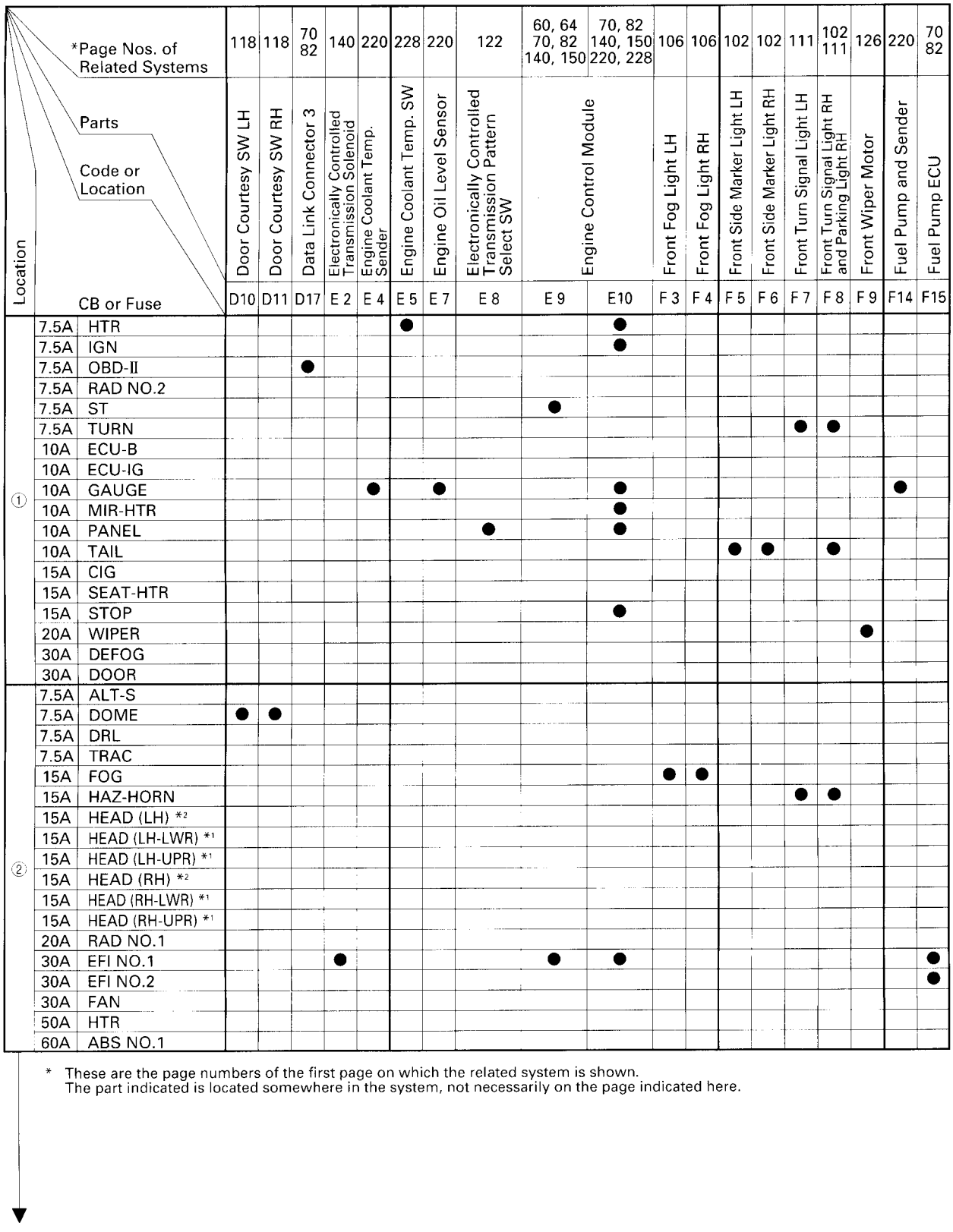

Location	CB or Fuse		*Page Nos. of Related Systems	118	118	70 82	140	220	228	220	122	60, 64 70, 82 140, 150	70, 82 140, 150 220, 228	106	106	102	102	111	102 111	126	220	70 82
			Parts	Door Courtesy SW LH	Door Courtesy SW RH	Data Link Connector 3	Electronically Controlled Transmission Solenoid	Engine Coolant Temp. Sender	Engine Coolant Temp. SW	Engine Oil Level Sensor	Electronically Controlled Transmission Pattern Select SW	Engine Control Module		Front Fog Light LH	Front Fog Light RH	Front Side Marker Light LH	Front Side Marker Light RH	Front Turn Signal Light LH	Front Turn Signal Light RH and Parking Light RH	Front Wiper Motor	Fuel Pump and Sender	Fuel Pump ECU
			Code or Location	D10	D11	D17	E 2	E 4	E 5	E 7	E 8	E 9	E10	F 3	F 4	F 5	F 6	F 7	F 8	F 9	F14	F15
①	7.5A	HTR							●				●									
	7.5A	IGN											●									
	7.5A	OBD-II				●																
	7.5A	RAD NO.2																				
	7.5A	ST										●										
	7.5A	TURN																●	●			
	10A	ECU-B																				
	10A	ECU-IG																				
	10A	GAUGE						●		●			●								●	
	10A	MIR-HTR											●									
	10A	PANEL									●		●									
	10A	TAIL														●	●		●			
	15A	CIG																				
	15A	SEAT-HTR																				
	15A	STOP											●									
	20A	WIPER																		●		
	30A	DEFOG																				
	30A	DOOR																				
②	7.5A	ALT-S																				
	7.5A	DOME		●	●																	
	7.5A	DRL																				
	7.5A	TRAC																				
	15A	FOG												●	●							
	15A	HAZ-HORN																●	●			
	15A	HEAD (LH) *2																				
	15A	HEAD (LH-LWR) *1																				
	15A	HEAD (LH-UPR) *1																				
	15A	HEAD (RH) *2																				
	15A	HEAD (RH-LWR) *1																				
	15A	HEAD (RH-UPR) *1																				
	20A	RAD NO.1																				
	30A	EFI NO.1					●					●	●									●
	30A	EFI NO.2																				●
	30A	FAN																				
	50A	HTR																				
	60A	ABS NO.1																				

* These are the page numbers of the first page on which the related system is shown.
The part indicated is located somewhere in the system, not necessarily on the page indicated here.

[LOCATION] ①:J/B No. 1 (See page 20) ②: R/B No.2 (See page 22) ③: R/B No. 4 (See page 23)

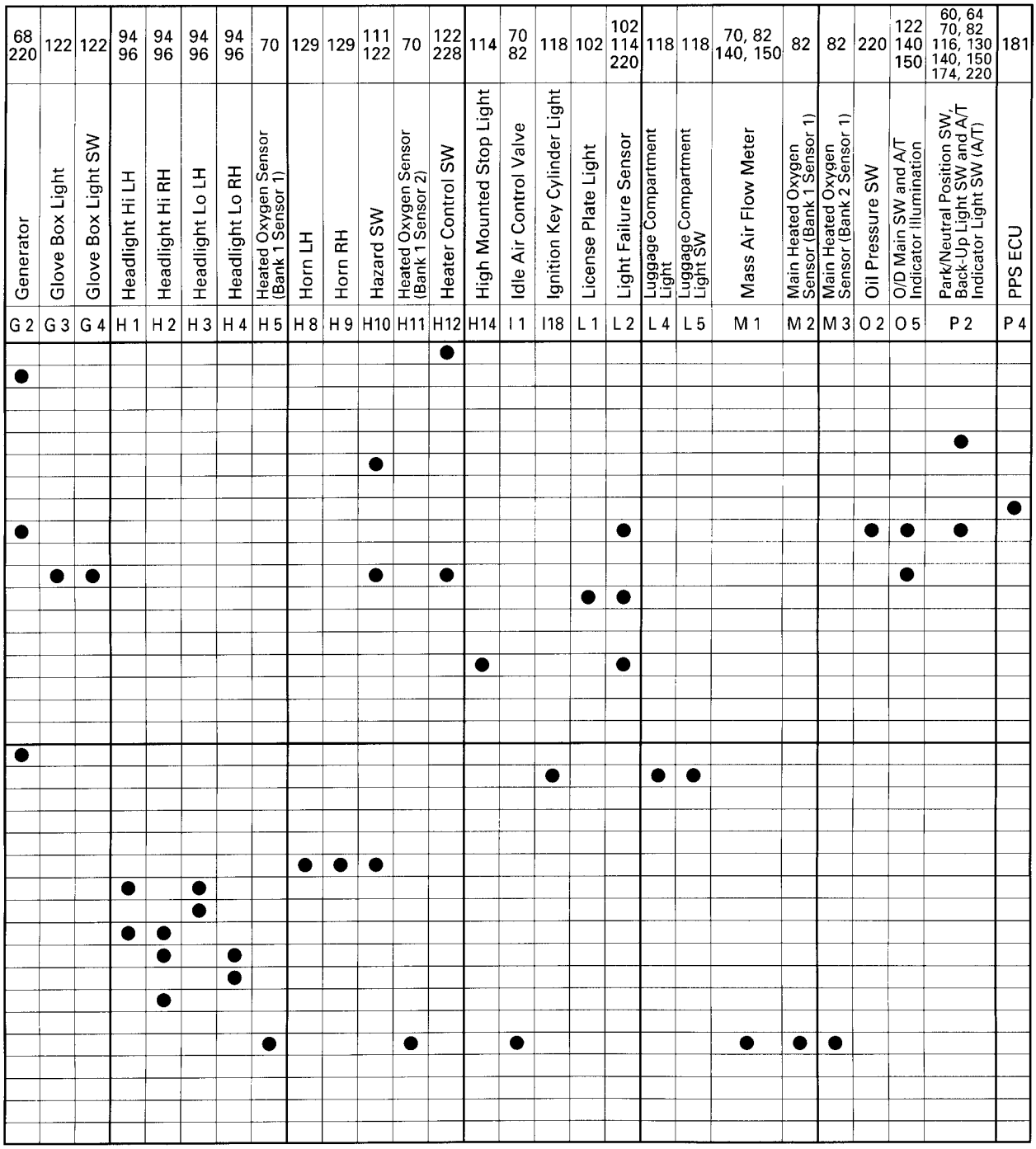

④: R/B No. 5 (See page 23)

H POWER SOURCE (Current Flow Chart)

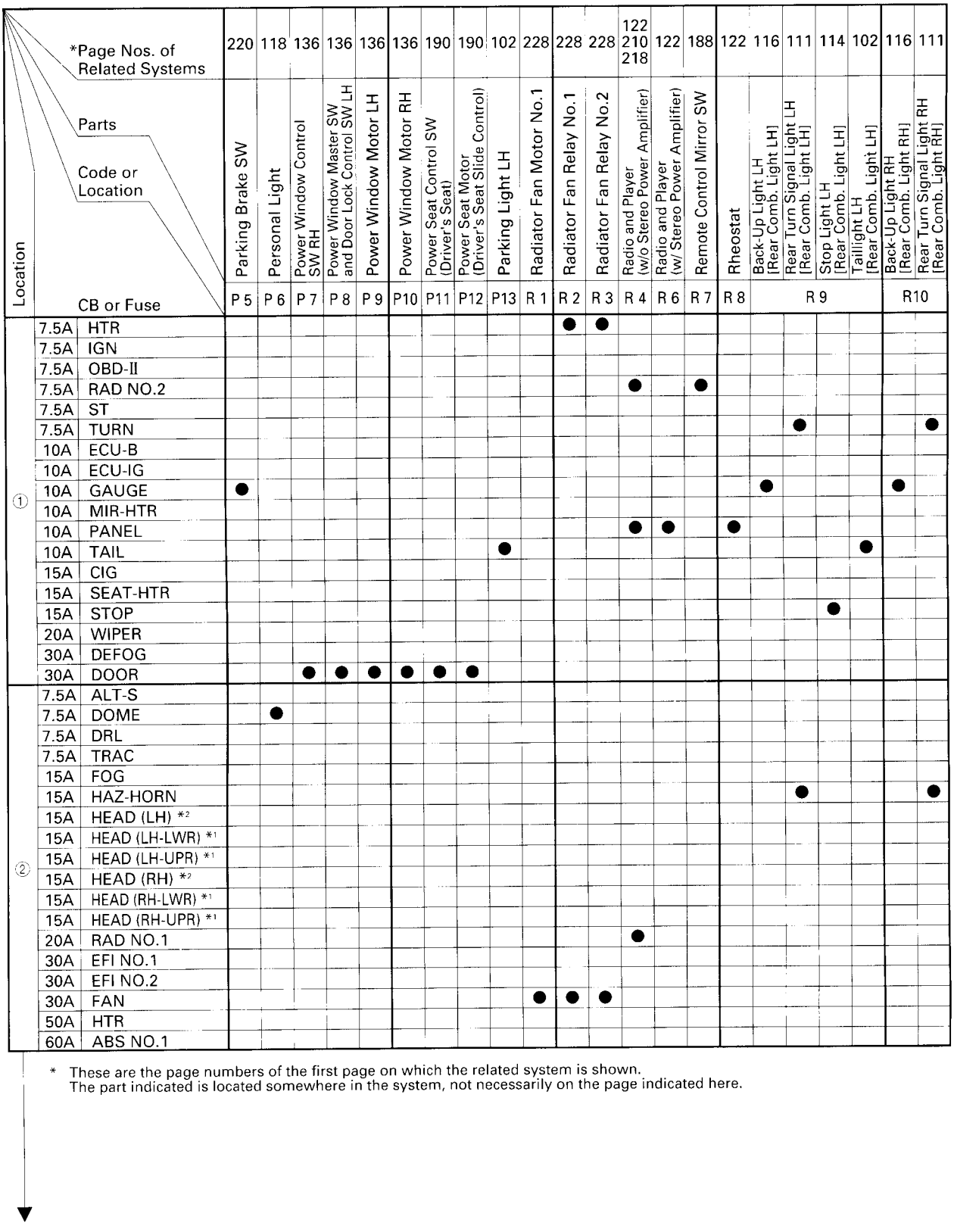

* These are the page numbers of the first page on which the related system is shown.
The part indicated is located somewhere in the system, not necessarily on the page indicated here.

[LOCATION] ①: J/B No. 1 (See page 20) ②: R/B No. 2 (See page 22) ③: R/B No.4 (See page 23)

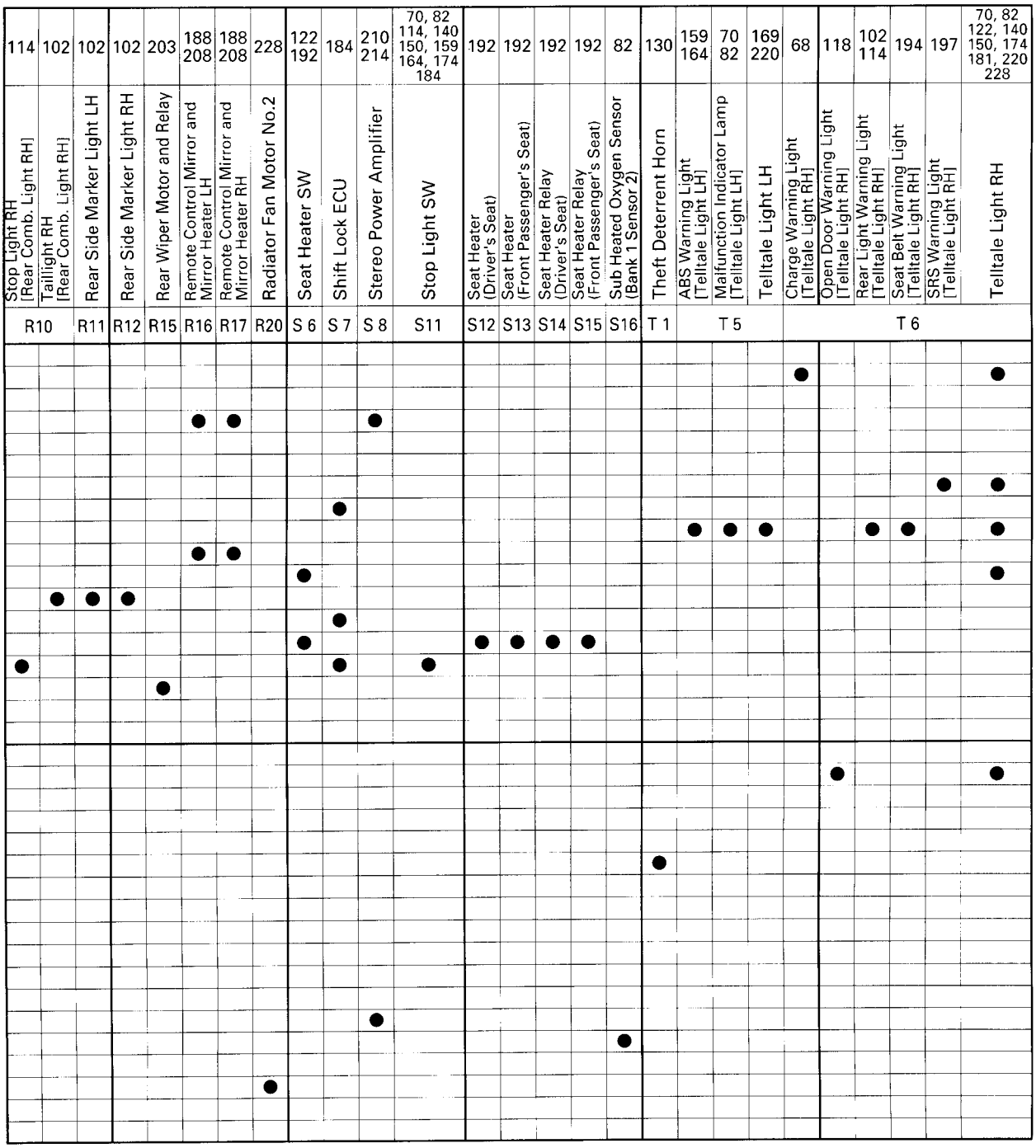

④: R/B No. 5 (See page 23)

H POWER SOURCE (Current Flow Chart)

*1: (CANADA)
*2: (USA

Location	CB or Fuse		*Page Nos. of Related Systems	130 136	122	206	206	60 64 130 136	169	164 169	82	70 82	70 82	70	70	70 82	70	70	70, 82 140, 150 174, 181 220, 228	126 203	102	108 118 194	130 136	130 136
			Parts	Theft Deterrent and Door Lock Control ECU	Traction Control SW	Tension Reducer Solenoid LH	Tension Reducer Solenoid RH	Theft Deterrent and Door Lock Control ECU	Throttle ECU		VSV (ACIS)	VSV (EGR)	VSV (EVAP)	VSV (Exhaust Bypass Valve)	VSV (Exhaust Gas Control Valve)	VSV (Fuel Pressure Up)	VSV (Intake Air Control Valve)	VSV (Waste Gate Valve)	Vehicle Speed Sensor No.1 (Combination Metar)	Washer Motor	Diode	Integration Relay	Power Main Relay (Point Side)	Power Main Relay (Coil Side)
			Code or Location	T 7	T 8	T11	T12	T13	T15	T16	V 1	V 2	V 3	V 4	V 5	V 6	V 7	V 8	V10	W 1	①			
①	7.5A	HTR																						
	7.5A	IGN																						
	7.5A	OBD-II																						
	7.5A	RAD NO.2																				●		
	7.5A	ST						●																
	7.5A	TURN																						
	10A	ECU-B								●														
	10A	ECU-IG		●		●	●																	●
	10A	GAUGE								●										●		●		
	10A	MIR-HTR																						
	10A	PANEL			●																			
	10A	TAIL																			●			
	15A	CIG		●																				
	15A	SEAT-HTR																						
	15A	STOP																						
	20A	WIPER																			●			
	30A	DEFOG																						
	30A	DOOR		●																			●	
②	7.5A	ALT-S																						
	7.5A	DOME						●														●		●
	7.5A	DRL																						
	7.5A	TRAC								●														
	15A	FOG																						
	15A	HAZ-HORN						●																
	15A	HEAD (LH) *2																						
	15A	HEAD (LH-LWR) *1																						
	15A	HEAD (LH-UPR) *1																						
	15A	HEAD (RH) *2																						
	15A	HEAD (RH-LWR) *1																						
	15A	HEAD (RH-UPR) *1																						
	20A	RAD NO.1																						
	30A	EFI NO.1							●		●	●	●	●	●	●	●	●						
	30A	EFI NO.2																						
	30A	FAN																						
	50A	HTR																						
	60A	ABS NO.1																						

* These are the page numbers of the first page on which the related system is shown.
The part indicated is located somewhere in the system, not necessarily on the page indicated here.

[LOCATION] ①: J/B No. 1 (See page 20) ②: R/B No.2 (See page 22) ③: R/B No.4 (See page 23)

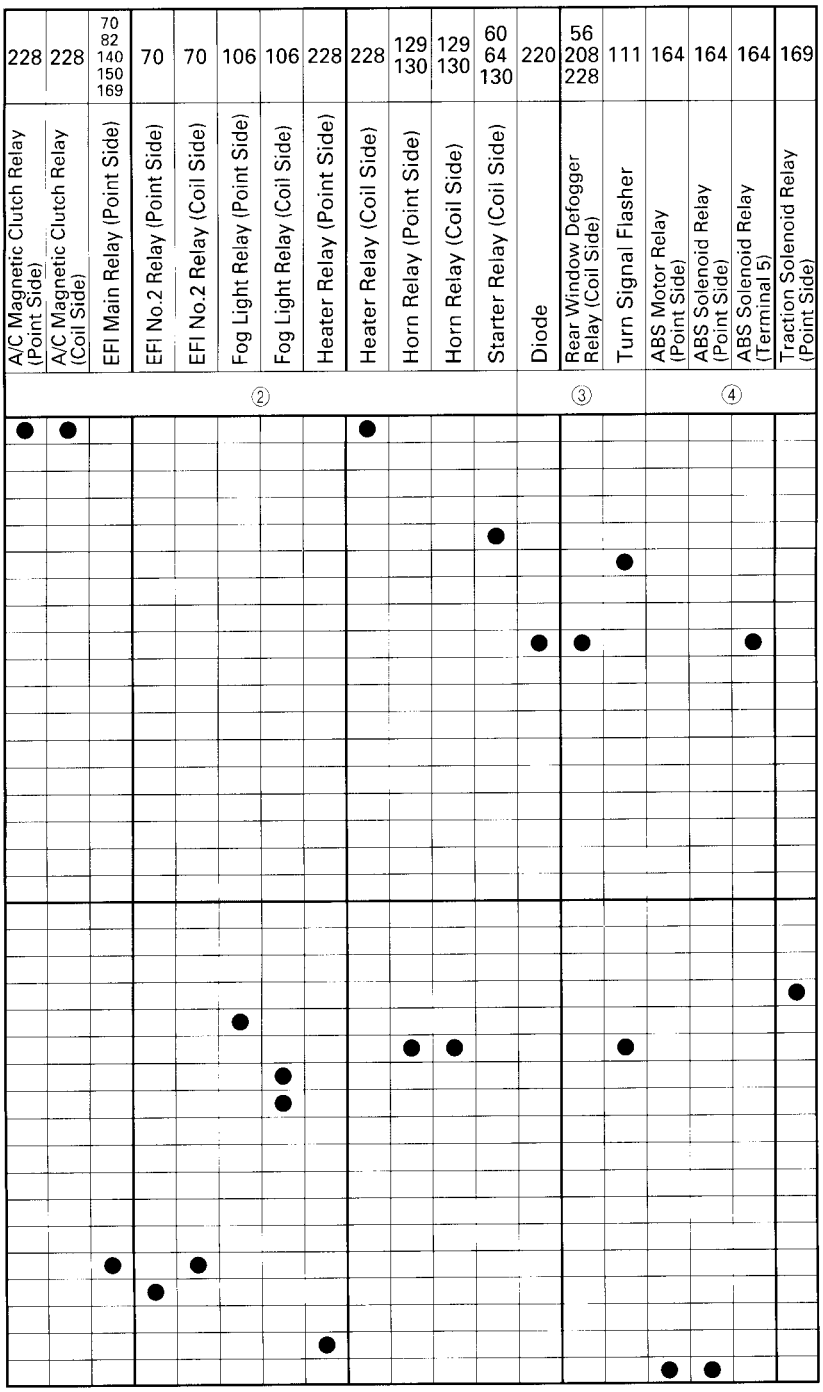

④: R/B No. 5 (See page 23)

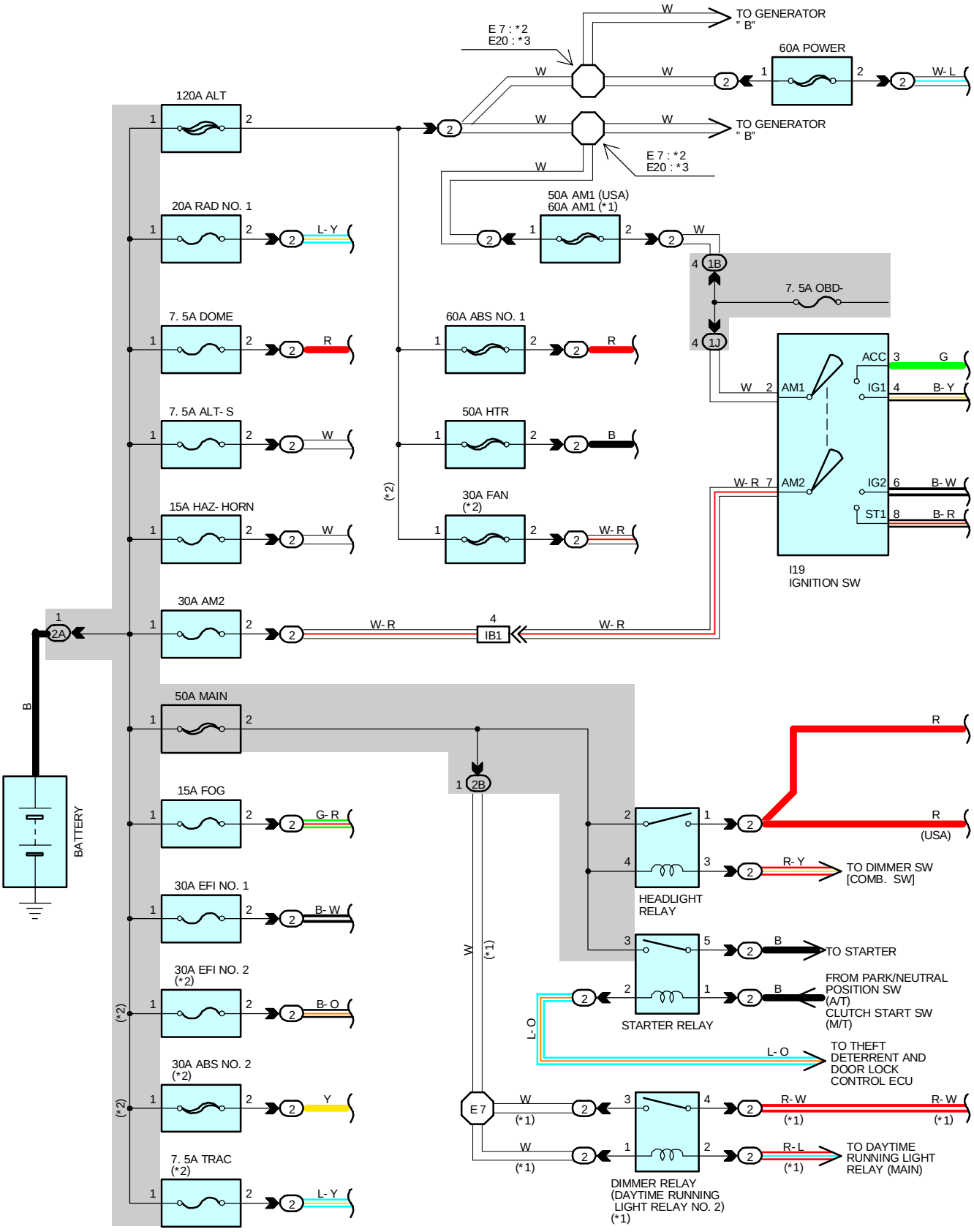
120A ALT
20A RAD NO. 1
7. 5A DOME
7. 5A ALT- S
15A HAZ- HORN
30A AM2
50A MAIN
15A FOG
30A EFI NO. 1
30A EFI NO. 2 (*2)
30A ABS NO. 2 (*2)
7. 5A TRAC (*2)
BATTERY
E 7 : *2
E20 : *3
TO GENERATOR " B"
60A POWER
50A AM1 (USA)
60A AM1 (*1)
60A ABS NO. 1
50A HTR
30A FAN (*2)
7. 5A OBD-
I19
IGNITION SW
ACC
IG1
AM1
AM2
IG2
ST1
IB1
2A
2B
1B
1J
HEADLIGHT RELAY
STARTER RELAY
DIMMER RELAY (DAYTIME RUNNING LIGHT RELAY NO. 2) (*1)
TO DIMMER SW [COMB. SW]
TO STARTER
FROM PARK/NEUTRAL POSITION SW (A/T) CLUTCH START SW (M/T)
TO THEFT DETERRENT AND DOOR LOCK CONTROL ECU
TO DAYTIME RUNNING LIGHT RELAY (MAIN)
(USA)

*1 : CANADA
*2 : 2JZ- GTE
*3 : 2JZ- GE

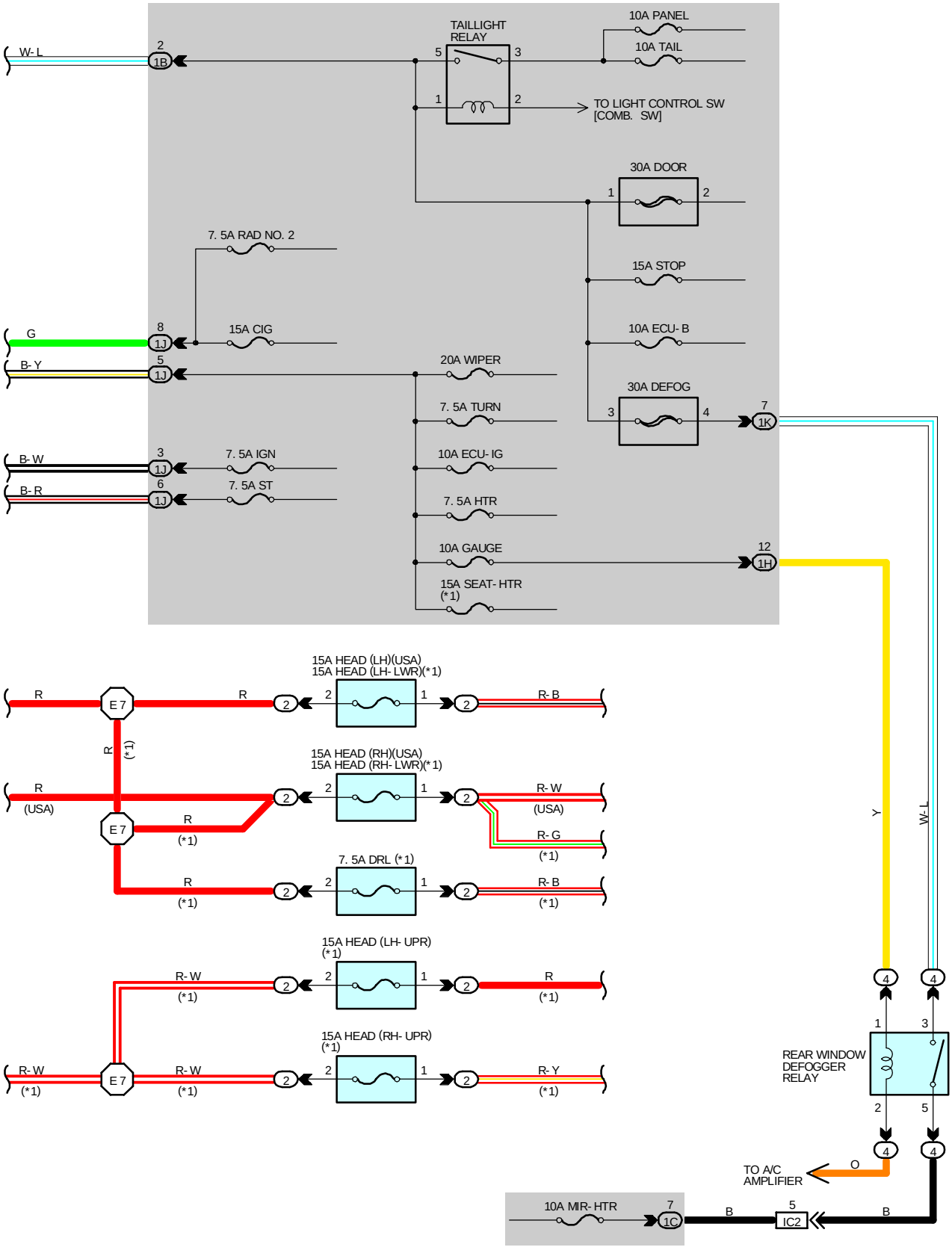

SERVICE HINTS

HEADLIGHT RELAY (USA)

2-1 : CLOSED WITH THE LIGHT CONTROL SW AT **HEAD** POSITION OR THE DIMMER SW AT **FLASH** POSITION

HEADLIGHT RELAY (CANADA)

2-1 : CLOSED WITH THE LIGHT CONTROL SW AT **HEAD** POSITION OR THE DIMMER SW AT **FLASH** POSITION
: CLOSED WITH THE ENGINE RUNNING AND THE PARKING BRAKE LEVER RELEASED (PARKING BRAKE SW OFF)

TAILLIGHT RELAY

5-3 : CLOSED WITH THE LIGHT CONTROL SW AT **TAIL** OR **HEAD** POSITION

I19 IGNITION SW

2-3 : CLOSED WITH THE IGNITION KEY AT **ACC** OR **ON** POSITION
2-4 : CLOSED WITH THE IGNITION KEY AT **ON** OR **ST** POSITION
7-6 : CLOSED WITH THE IGNITION KEY AT **ON** OR **ST** POSITION
7-8 : CLOSED WITH THE IGNITION KEY AT **ST** POSITION

: PARTS LOCATION

CODE	SEE PAGE	CODE	SEE PAGE	CODE	SEE PAGE
I19	29				

: RELAY BLOCKS

CODE	SEE PAGE	RELAY BLOCKS (RELAY BLOCK LOCATION)
2	22	R/B NO.2 (ENGINE COMPARTMENT LEFT)
4	23	R/B NO.4 (LEFT KICK PANEL)

: JUNCTION BLOCK AND WIRE HARNESS CONNECTOR

CODE	SEE PAGE	JUNCTION BLOCK AND WIRE HARNESS (CONNECTOR LOCATION)
1B	20	ENGINE ROOM MAIN WIRE AND J/B NO. 1 (LEFT KICK PANEL)
1C	20	FLOOR NO. 2 WIRE AND J/B NO. 1 (LEFT KICK PANEL)
1H	20	COWL WIRE AND J/B NO. 1 (LEFT KICK PANEL)
1J		
1K		
2A	22	BATTERY AND J/B NO. 2 (ENGINE COMPARTMENT LEFT)
2B	22	ENGINE ROOM MAIN WIRE AND J/B NO. 2 (ENGINE COMPARTMENT LEFT)

: CONNECTOR JOINING WIRE HARNESS AND WIRE HARNESS

CODE	SEE PAGE	JOINING WIRE HARNESS AND WIRE HARNESS (CONNECTOR LOCATION)
IB1	36	ENGINE ROOM MAIN WIRE AND COWL WIRE (LEFT KICK PANEL)
IC2	36	FLOOR NO. 2 WIRE AND COWL WIRE (LEFT KICK PANEL)

: SPLICE POINTS

CODE	SEE PAGE	WIRE HARNESS WITH SPLICE POINTS	CODE	SEE PAGE	WIRE HARNESS WITH SPLICE POINTS
E7	32	ENGINE ROOM MAIN WIRE	E20	34	ENGINE ROOM MAIN WIRE

I19

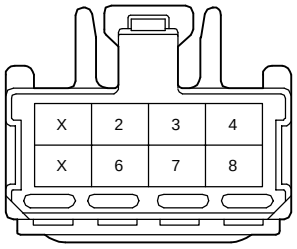

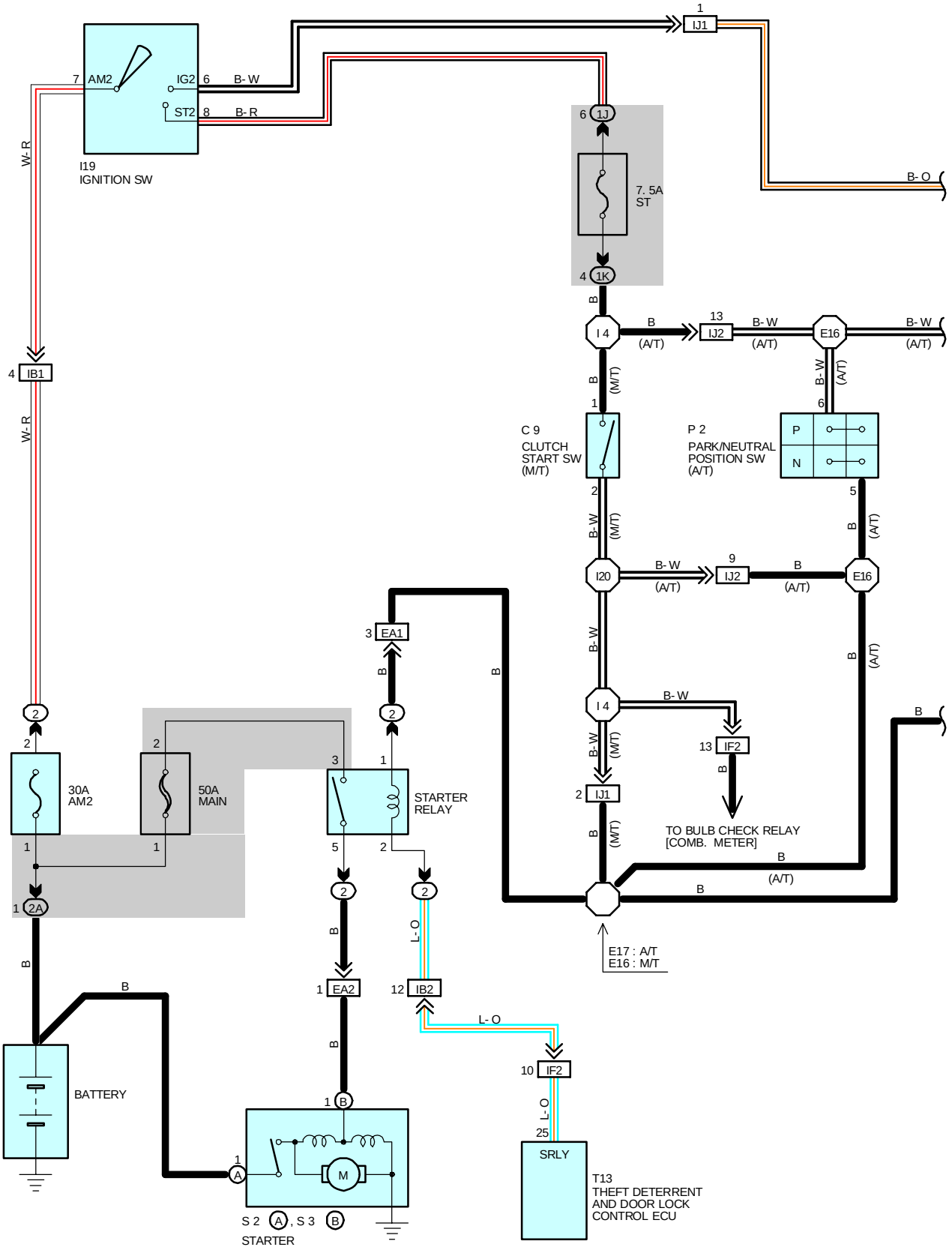
I19
IGNITION SW
AM2
IG2
ST2
B- W
B- R
W- R
1 IJ1
B- O
6 1J
7. 5A
ST
4 1K
4 IB1
I 4
B
(A/T)
13 IJ2
B- W
(A/T)
E16
B- W
(A/T)
(M/T)
C 9
CLUTCH
START SW
(M/T)
P 2
PARK/NEUTRAL
POSITION SW
(A/T)
P
N
I20
9 IJ2
3 EA1
30A
AM2
50A
MAIN
STARTER
RELAY
2A
TO BULB CHECK RELAY
[COMB. METER]
E17 : A/T
E16 : M/T
1 EA2
12 IB2
L- O
10 IF2
25
SRLY
T13
THEFT DETERRENT
AND DOOR LOCK
CONTROL ECU
BATTERY
M
S 2 A , S 3 B
STARTER

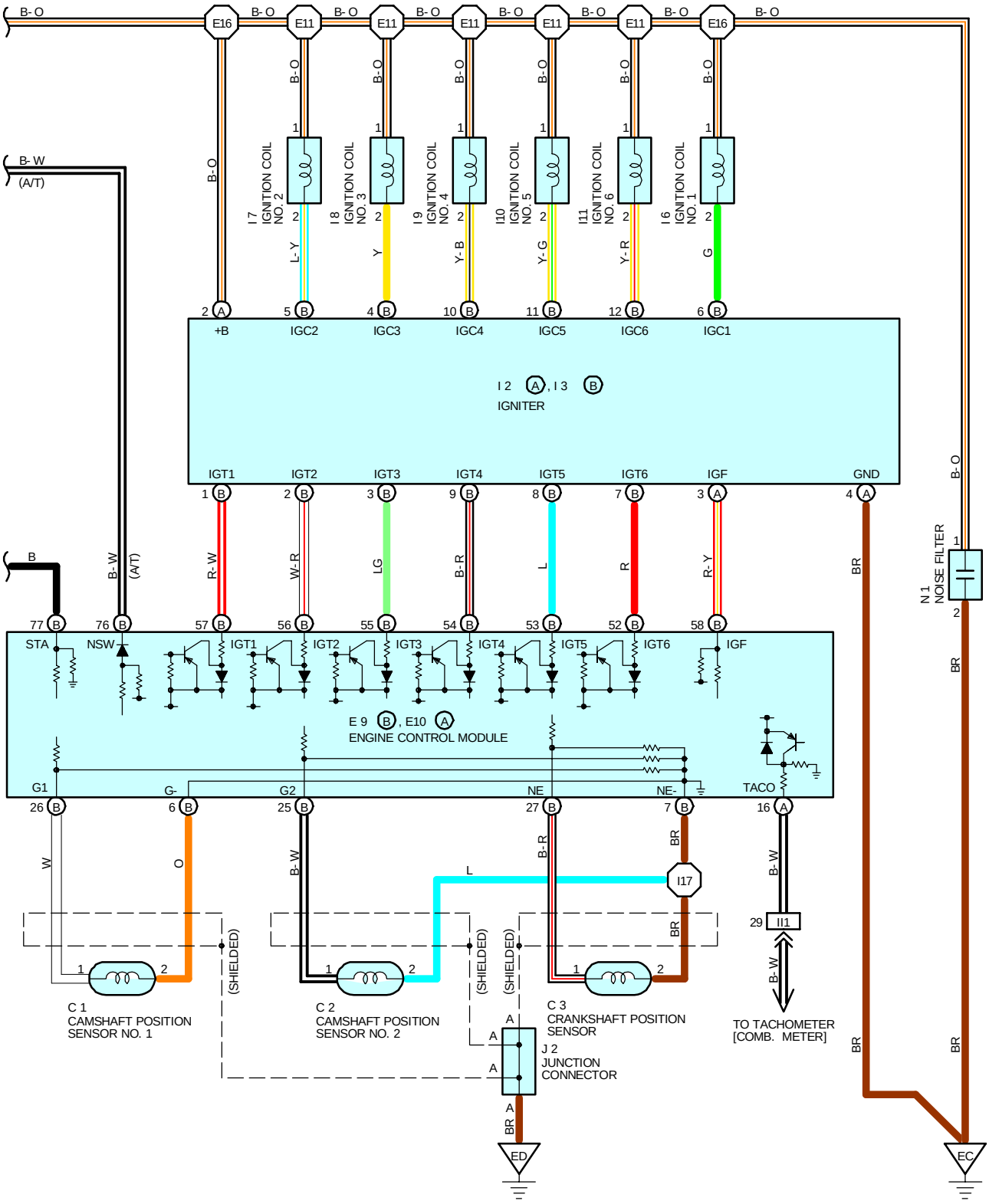
B- O
E16
E11
B- W
(A/T)
I 7 IGNITION COIL NO. 2
I 8 IGNITION COIL NO. 3
I 9 IGNITION COIL NO. 4
I10 IGNITION COIL NO. 5
I11 IGNITION COIL NO. 6
I 6 IGNITION COIL NO. 1
L- Y
Y
Y- B
Y- G
Y- R
G
+B
IGC2
IGC3
IGC4
IGC5
IGC6
IGC1
I 2 A , I 3 B
IGNITER
IGT1
IGT2
IGT3
IGT4
IGT5
IGT6
IGF
GND
R- W
W- R
LG
B- R
L
R
R- Y
BR
N 1 NOISE FILTER
B
77 B
76 B
57 B
56 B
55 B
54 B
53 B
52 B
58 B
STA
NSW
E 9 B , E10 A
ENGINE CONTROL MODULE
G1
G-
G2
NE
NE-
TACO
26 B
6 B
25 B
27 B
7 B
16 A
W
O
B- W
B- R
BR
L
I17
29 II1
(SHIELDED)
C 1
CAMSHAFT POSITION SENSOR NO. 1
C 2
CAMSHAFT POSITION SENSOR NO. 2
C 3
CRANKSHAFT POSITION SENSOR
J 2
JUNCTION CONNECTOR
TO TACHOMETER [COMB. METER]
ED
EC

SERVICE HINTS

I19 IGNITION SW

7-8 : CLOSED WITH THE IGNITION SW AT **ST** POSITION
7-6 : CLOSED WITH THE IGNITION SW AT **ON** OR **ST** POSITION

P2 PARK/NEUTRAL POSITION SW (A/T)

6-5 : CLOSED WITH THE A/T SHIFT LEVER IN **P** OR **N** POSITION

C9 CLUTCH START SW (M/T)

1-2 : CLOSED WITH THE CLUTCH PEDAL FULLY DEPRESSED

S2 (A), S3 (B) STARTER

POINTS CLOSED WITH THE PARK/NEUTRAL POSITION SW ON AND THE IGNITION SW AT **ST** POSITION (A/T)
POINTS CLOSED WITH THE CLUTCH START SW ON AND THE IGNITION SW AT **ST** POSITION (M/T)

: PARTS LOCATION

CODE	SEE PAGE	CODE	SEE PAGE	CODE	SEE PAGE
C1	24	I3 B	25	J2	29
C2	24	I6	25	N1	25 (2JZ-GTE)
C3	24 (2JZ-GTE)	I7	25	P2	25 (2JZ-GTE)
C9	28	I8	25	S2 A	25 (2JZ-GTE)
D1	24 (2JZ-GTE)	I9	25	S3 B	25 (2JZ-GTE)
E9 B	29	I10	25	T13	29
E10 A	29	I11	25		
I2 A	25	I19	29		

: RELAY BLOCKS

CODE	SEE PAGE	RELAY BLOCKS (RELAY BLOCK LOCATION)
2	22	R/B NO. 2 (ENGINE COMPARTMENT LEFT)

: JUNCTION BLOCK AND WIRE HARNESS CONNECTOR

CODE	SEE PAGE	JUNCTION BLOCK AND WIRE HARNESS (CONNECTOR LOCATION)
1J	20	COWL WIRE AND J/B NO. 1 (LEFT KICK PANEL)
IK		
2A	22	BATTERY AND J/B NO. 2 (ENGINE COMPARTMENT LEFT)

: CONNECTOR JOINING WIRE HARNESS AND WIRE HARNESS

CODE	SEE PAGE	JOINING WIRE HARNESS AND WIRE HARNESS (CONNECTOR LOCATION)
EA1	32(2JZ-GTE)	ENGINE WIRE AND ENGINE ROOM MAIN WIRE (NEAR THE R/B NO. 2)
EA2	32	
IB1	36	ENGINE ROOM MAIN WIRE AND COWL WIRE (LEFT KICK PANEL)
IB2		
IF2	36	INSTRUMENT PANEL WIRE AND COWL WIRE (INSTRUMENT PANEL REINFORCEMENT LH)
II1	38	ENGINE WIRE AND INSTRUMENT PANEL WIRE (RIGHT KICK PANEL)
IJ1	38	ENGINE WIRE AND COWL WIRE (RIGHT KICK PANEL)
IJ2		

: GROUND POINTS

CODE	SEE PAGE	GROUND POINTS LOCATION
EC	32 (2JZ-GTE)	FRONT SIDE OF INTAKE MANIFOLD
ED	32 (2JZ-GTE)	REAR SIDE OF INTAKE MANIFOLD

: SPLICE POINTS

CODE	SEE PAGE	WIRE HARNESS WITH SPLICE POINTS	CODE	SEE PAGE	WIRE HARNESS WITH SPLICE POINTS
E11	32	ENGINE WIRE	I4	38	COWL WIRE
E16			I17		
E17			I20		

C 1 BLACK



C 2 BLACK



C 3 DARK GRAY



C 9

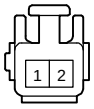

E 9 (B) DARK GRAY

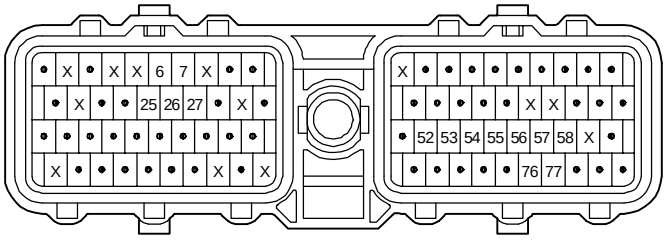

E10 (A) DARK GRAY

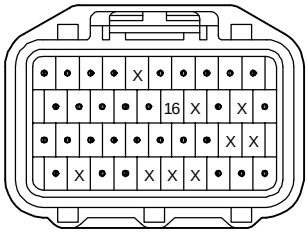

I 2 (A) BLACK



I 3 (B) BLACK

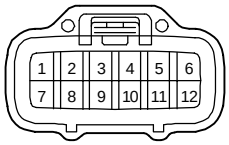

I 6, I 7, I 8
I 9, I10, I11 BLACK

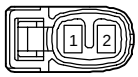

I19

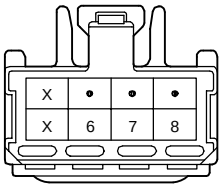

J 2

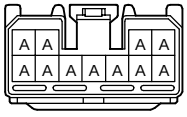

(HINT : SEE PAGE 7)

N 1 GRAY

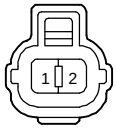

P 2 GRAY

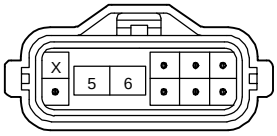

S 2 (A)

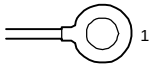

S 3 (B) BLACK



T13 ORANGE

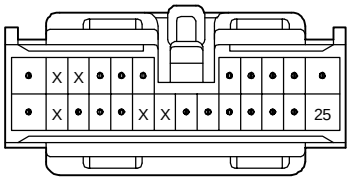

*1 : 2JZ-GTE
*2 : 2JZ-GE

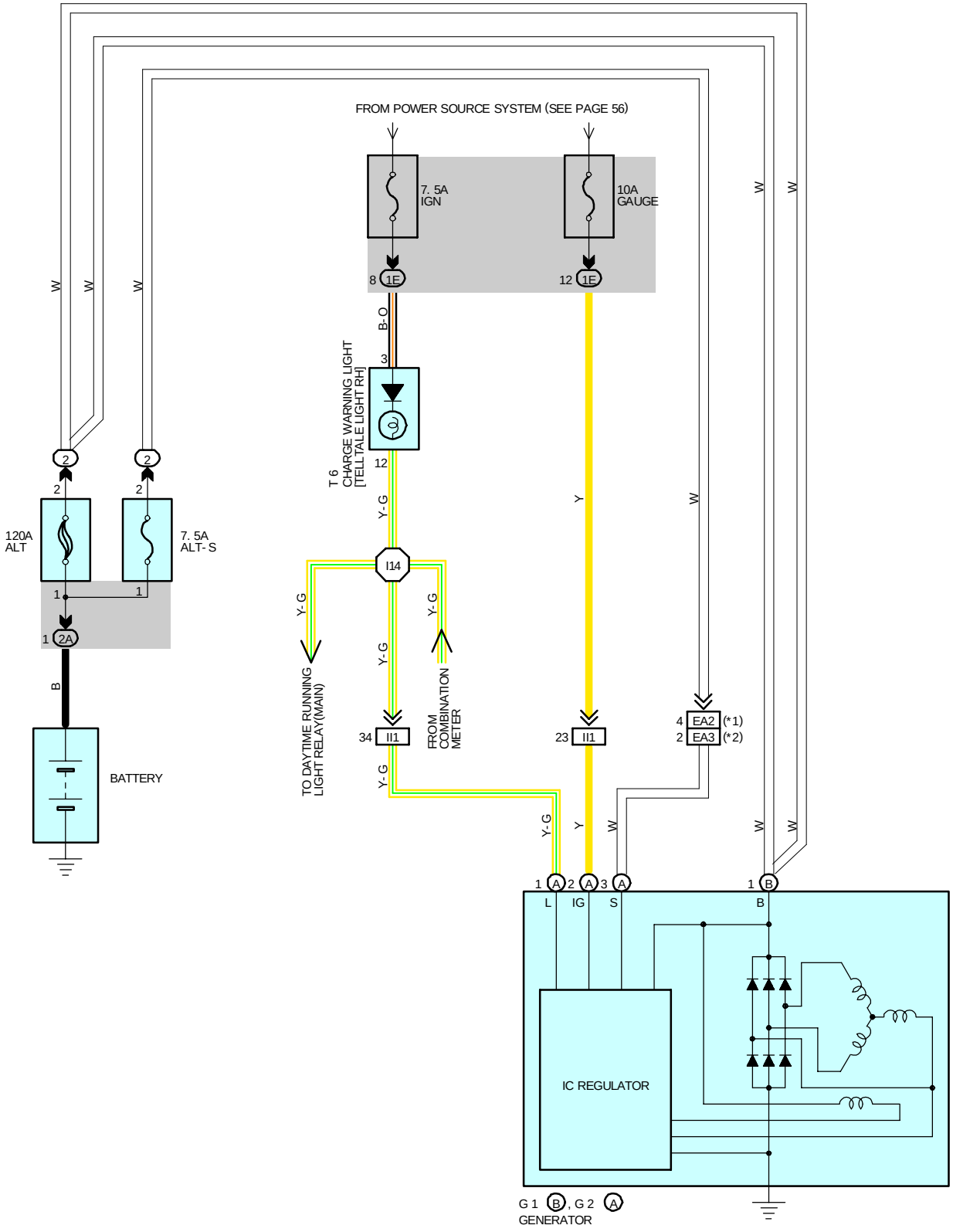

SERVICE HINTS

G2 (A) GENERATOR

(A) 3-GROUND : **13.9-15.1** VOLTS WITH THE ENGINE RUNNING AT **2000** RPM AND **25**•C (**77**•F)
13.5-14.3 VOLTS WITH THE ENGINE RUNNING AT **5000** RPM AND **115**•C (**239**•F)

(A) 1-GROUND ; **0-4** VOLTS WITH THE IGNITION SW AT **ON** POSITION AND THE ENGINE NOT RUNNING

: PARTS LOCATION

CODE		SEE PAGE	CODE		SEE PAGE	CODE	SEE PAGE
G1	B	24 (2JZ-GTE)	G2	A	24 (2JZ-GTE)	T6	29
		26 (2JZ-GE)			26 (2JZ-GE)		

: RELAY BLOCKS

CODE	SEE PAGE	RELAY BLOCKS (RELAY BLOCK LOCATION)
2	22	R/B NO. 2 (ENGINE COMPARTMENT LEFT)

: JUNCTION BLOCK AND WIRE HARNESS CONNECTOR

CODE	SEE PAGE	JUNCTION BLOCK AND WIRE HARNESS (CONNECTOR LOCATION)
1E	20	INSTRUMENT PANEL WIRE AND J/B NO. 1 (LEFT KICK PANEL)
2A	22	BATTERY AND J/B NO. 2 (ENGINE COMPARTMENT LEFT)

: CONNECTOR JOINING WIRE HARNESS AND WIRE HARNESS

CODE	SEE PAGE	JOINING WIRE HARNESS AND WIRE HARNESS (CONNECTOR LOCATION)
EA2	32	ENGINE WIRE AND ENGINE ROOM MAIN WIRE (NEAR THE R/B NO. 2)
EA3	34	
II1	38	ENGINE WIRE AND INSTRUMENT PANEL WIRE (RIGHT KICK PANEL)

: SPLICE POINTS

CODE	SEE PAGE	WIRE HARNESS WITH SPLICE POINTS	CODE	SEE PAGE	WIRE HARNESS WITH SPLICE POINTS
I14	38	INSTRUMENT PANEL WIRE			

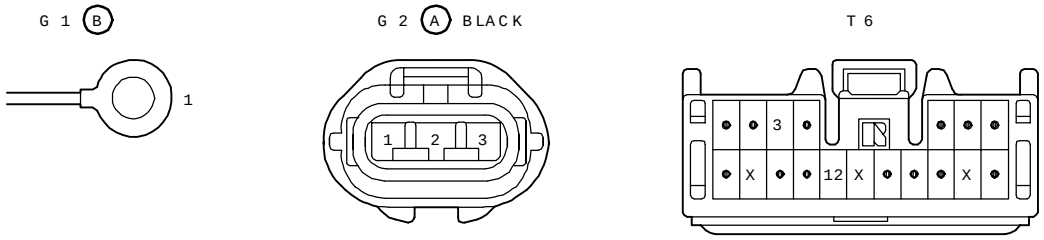

SYSTEM OUTLINE

THE ENGINE CONTROL SYSTEM UTILIZES A MICROCOMPUTER AND MAINTAINS OVERALL CONTROL OF THE ENGINE, TRANSMISSION ETC. AN OUTLINE OF THE ENGINE CONTROL IS GIVEN HERE.

1. INPUT SIGNALS

(1) ENGINE COOLANT TEMP. SIGNAL CIRCUIT
THE ENGINE COOLANT TEMP. SENSOR DETECTS THE ENGINE COOLANT TEMP. WHICH IS INPUT INTO **TERMINAL THW** OF THE ENGINE CONTROL MODULE AS A CONTROL SIGNAL.

(2) INTAKE AIR TEMP. SIGNAL CIRCUIT
THE INTAKE AIR TEMP. SENSOR IS INSTALLED IN THE MASS AIR FLOW METER AND DETECTS THE INTAKE AIR TEMP. WHICH IS INPUT AS A CONTROL SIGNAL TO **TERMINAL THA** OF THE ENGINE CONTROL MODULE.

(3) OXYGEN DENSITY SIGNAL CIRCUIT
THE OXYGEN DENSITY IN THE EXHAUST EMISSION IS DETECTED BY THE HEATED OXYGEN SENSOR SIDE AND INPUT AS A CONTROL SIGNAL TO **TERMINAL OX1, OXS** OF THE ENGINE CONTROL MODULE.

(4) RPM SIGNAL CIRCUIT
CRANKSHAFT POSITION IS DETECTED BY THE CRANKSHAFT POSITION SENSOR. CRANKSHAFT POSITION IS INPUT AS A CONTROL SIGNAL TO **TERMINAL NE** OF THE ENGINE CONTROL MODULE.

(5) THROTTLE POSITION SIGNAL CIRCUIT
THE THROTTLE POSITION SENSOR DETECTS THE THROTTLE VALVE OPENING ANGLE AS A CONTROL SIGNAL, WHICH IS INPUT INTO **TERMINAL VTA1** OF THE ENGINE CONTROL MODULE. WHEN THE VALVE IS COMPLETELY CLOSED, THE CONTROL SIGNAL IS INPUT INTO **TERMINAL IDL1**.

(6) VEHICLE SPEED CIRCUIT
THE VEHICLE SPEED IS DETECTED BY VEHICLE SPEED SENSOR NO. 1 INSTALLED IN THE TRANSMISSION AND THE SIGNAL IS INPUT TO **TERMINAL SP1** OF THE ENGINE CONTROL MODULE VIA THE COMBINATION METER.

(7) NEUTRAL POSITION SIGNAL CIRCUIT
THE PARK/NEUTRAL POSITION SW DETECTS WHETHER THE SHIFT POSITION IS IN “N” AND “ P” OR NOT, AND THE SIGNAL IS INPUT INTO **TERMINAL NSW** OF THE ENGINE CONTROL MODULE.

(8) A/C SW SIGNAL CIRCUIT
THE OPERATING VOLTAGE OF THE A/C MAGNETIC CLUTCH IS DETECTED AND THE SIGNAL IS INPUT INTO **TERMINAL ACMG** OF ENGINE CONTROL MODULE AS A CONTROL SIGNAL.

(9) BATTERY SIGNAL CIRCUIT
VOLTAGE IS CONSTANTLY APPLIED TO **TERMINAL BATT** OF THE ENGINE CONTROL MODULE. WITH THE IGNITION SW TURNED ON, THE VOLTAGE FOR ENGINE CONTROL MODULE START-UP POWER SUPPLY IS APPLIED TO **TERMINAL +B** OF THE ENGINE CONTROL MODULE VIA EFI MAIN RELAY.
THE CURRENT FLOWING THROUGH THE **IGN** FUSE FLOWS TO **TERMINAL IGSW** OF THE ENGINE CONTROL MODULE.

(10) INTAKE AIR VOLUME SIGNAL CIRCUIT
INTAKE AIR VOLUME IS DETECTED BY THE MASS AIR FLOW METER AND THE SIGNAL IS INPUT TO **TERMINAL VG** OF THE ENGINE CONTROL MODULE AS A CONTROL SIGNAL.

(11) STOP LIGHT SW SIGNAL CIRCUIT
THE STOP LIGHT SW IS USED TO DETECT WHETHER THE VEHICLE IS BRAKING OR NOT AND THE SIGNAL IS INPUT INTO **TERMINAL STP** OF THE ENGINE CONTROL MODULE AS A CONTROL SIGNAL.

(12) STARTER SIGNAL CIRCUIT
TO CONFIRM WHETHER THE ENGINE IS CRANKING THE VOLTAGE APPLIED TO THE STARTER MOTOR DURING CRANKING IS DETECTED AND THE SIGNAL IS INPUT IN **TERMINAL STA** OF THE ENGINE CONTROL MODULE AS A CONTROL SIGNAL.

(13) ENGINE KNOCK SIGNAL CIRCUIT
ENGINE KNOCKING IS DETECTED BY KNOCK SENSOR FRONT AND REAR SIDE AND THE SIGNAL IS INPUT **TERMINALS KNK1** AND **KNK2** AS A CONTROL SIGNAL.

2. CONTROL SYSTEM

* SEQUENTIAL MULTIPORT FUEL INJECTION SYSTEM
  THE SEQUENTIAL MULTIPORT FUEL INJECTION SYSTEM MONITORS THE ENGINE CONDITION THROUGH THE SIGNALS INPUT FROM EACH SENSOR (INPUT SIGNALS FROM (1) TO (13) ETC.) TO THE ENGINE CONTROL MODULE. THE BEST FUEL INJECTION TIMING IS DECIDED BASED ON THIS DATA AND THE PROGRAM MEMORIZED BY THE ENGINE CONTROL MODULE, AND THE CONTROL SIGNAL IS OUTPUT TO **TERMINALS #10, #20, #30, #40, #50 AND #60** OF THE ENGINE CONTROL MODULE TO OPERATE THE INJECTOR (INJECT THE FUEL). THE SEQUENTIAL MULTIPORT FUEL INJECTION SYSTEM PRODUCES CONTROLS OF FUEL INJECTION OPERATION BY THE ENGINE CONTROL MODULE IN RESPONSE TO THE DRIVING CONDITIONS.
* ESA SYSTEM
  THE ESA SYSTEM MONITORS THE ENGINE CONDITION THROUGH THE SIGNALS INPUT TO THE ENGINE CONTROL MODULE FROM EACH SENSOR (INPUT SIGNALS FROM (1), (2), (4) TO (13) ETC.). THE BEST IGNITION TIMING IS DECIDED ACCORDING TO THIS DATA AND THE MEMORIZED DATA IN THE ENGINE CONTROL MODULE AND THE CONTROL SIGNAL IS OUTPUT TO **TERMINALS IGT1, IGT2, IGT3, IGT4, IGT5** AND **IGT6** THESE SIGNALS CONTROL THE IGNITER TO PROVIDE THE BEST IGNITION TIMING FOR THE DRIVING CONDITIONS.
* HEATED OXYGEN SENSOR HEATER CONTROL SYSTEM
  THE MAIN HEATED OXYGEN SENSOR, SUB HEATED OXYGEN SENSOR HEATER CONTROL SYSTEM TURNS THE HEATER ON WHEN THE INTAKE AIR VOLUME IS LOW (TEMP. OF EXHAUST EMISSIONS IS LOW) AND WARMS UP THE OXYGEN SENSOR TO IMPROVE DETECTION PERFORMANCE OF THE SENSOR. THE ENGINE CONTROL MODULE EVALUATES THE SIGNALS FROM EACH SENSOR (INPUT SIGNALS FROM (1), (2), (4), (9) TO (11) ETC.), AND OUTPUTS CURRENT TO **TERMINALS HT1, HTS** TO CONTROL THE HEATER
* IDLE AIR CONTROL SYSTEM
  THE IDLE AIR CONTROL SYSTEM (STEP MOTOR TYPE) INCREASES THE ENGINE SPEED AND PROVIDES IDLING STABILITY FOR FAST IDLE-UP WHEN THE ENGINE IS COLD, AND WHEN THE IDLE SPEED HAS DROPPED DUE TO ELECTRICAL LOAD AND SO ON. THE ENGINE CONTROL MODULE EVALUATES THE SIGNALS FROM EACH SENSOR (INPUT SIGNALS FROM (1), (4), (5), (8), (9), (11) ETC.), OUTPUTS CURRENT TO **TERMINALS ISC1, ISC2, ISC3** AND **ISC4** TO CONTROL THE IDLE AIR CONTROL VALVE.
* EGR CONTROL SYSTEM
  THE EGR CONTROL SYSTEM DETECTS THE SIGNAL FROM EACH SENSOR (INPUT SIGNALS FROM (1), (4), (9), (10) ETC.), AND OUTPUTS CURRENT TO **TERMINAL EGR** TO CONTROL THE EGR VALVE.
* FUEL PUMP CONTROL SYSTEM
  THE ENGINE CONTROL MODULE OUTPUTS CURRENT TO **TERMINAL FPC** AND CONTROLS THE FUEL PUMP ECU AND FUEL PUMP DRIVE SPEED IN RESPONSE TO THE DRIVING CONDITIONS

3. DIAGNOSIS SYSTEM

WITH THE DIAGNOSIS SYSTEM, WHEN THERE IS A MALFUNCTION IN THE ENGINE CONTROL MODULE SIGNAL SYSTEM, THE MALFUNCTIONING SYSTEM IS RECORDED IN THE MEMORY. THE MALFUNCTIONING SYSTEM CAN BE FOUND BY READING THE CODE DISPLAYED BY THE MALFUNCTION INDICATOR LAMP.

4. FAIL-SAFE SYSTEM

WHEN A MALFUNCTION HAS OCCURRED IN ANY SYSTEM, IF THERE IS A POSSIBILITY OF ENGINE TROUBLE BEING CAUSED BY CONTINUED CONTROL BASED ON THE SIGNALS FROM THAT SYSTEM, THE FAIL-SAFE SYSTEM EITHER CONTROLS THE SYSTEM BY USING DATA (STANDARD VALUES) RECORDED IN THE ENGINE CONTROL MODULE MEMORY OR ELSE STOPS THE ENGINE.

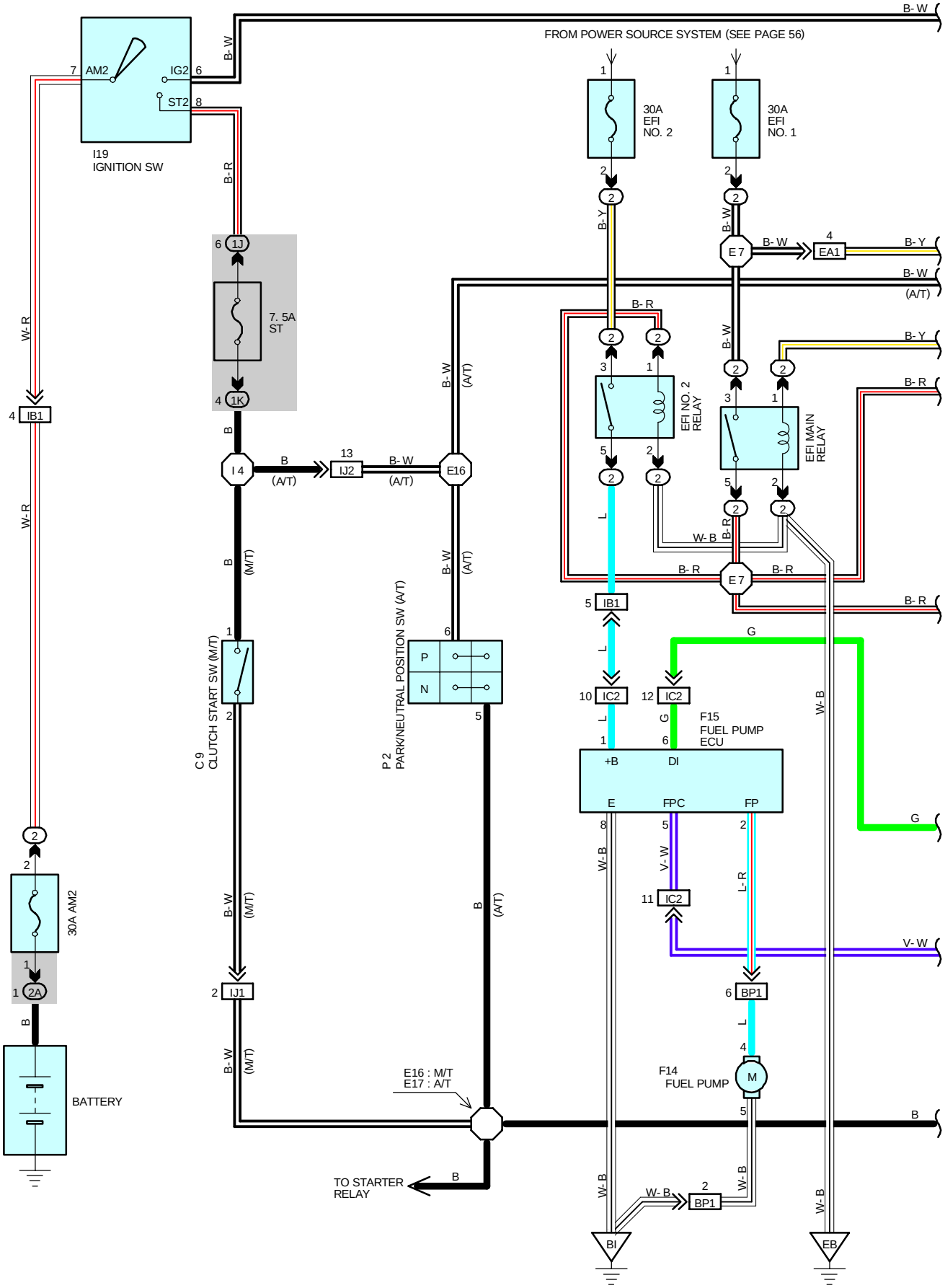
FROM POWER SOURCE SYSTEM (SEE PAGE 56)
I19
IGNITION SW
AM2
IG2
ST2
30A
EFI
NO. 2
30A
EFI
NO. 1
7. 5A
ST
EFI NO. 2
RELAY
EFI MAIN
RELAY
E 7
EA1
IB1
I 4
IJ2
E16
IC2
IJ1
BP1
C 9
CLUTCH START SW (M/T)
P 2
PARK/NEUTRAL POSITION SW (A/T)
P
N
F15
FUEL PUMP
ECU
+B
DI
E
FPC
FP
F14
FUEL PUMP
M
30A AM2
2A
BATTERY
E16 : M/T
E17 : A/T
TO STARTER
RELAY
BI
EB
B- W
B- R
B- Y
W- R
W- B
V- W
L- R
B
G
L
(A/T)
(M/T)

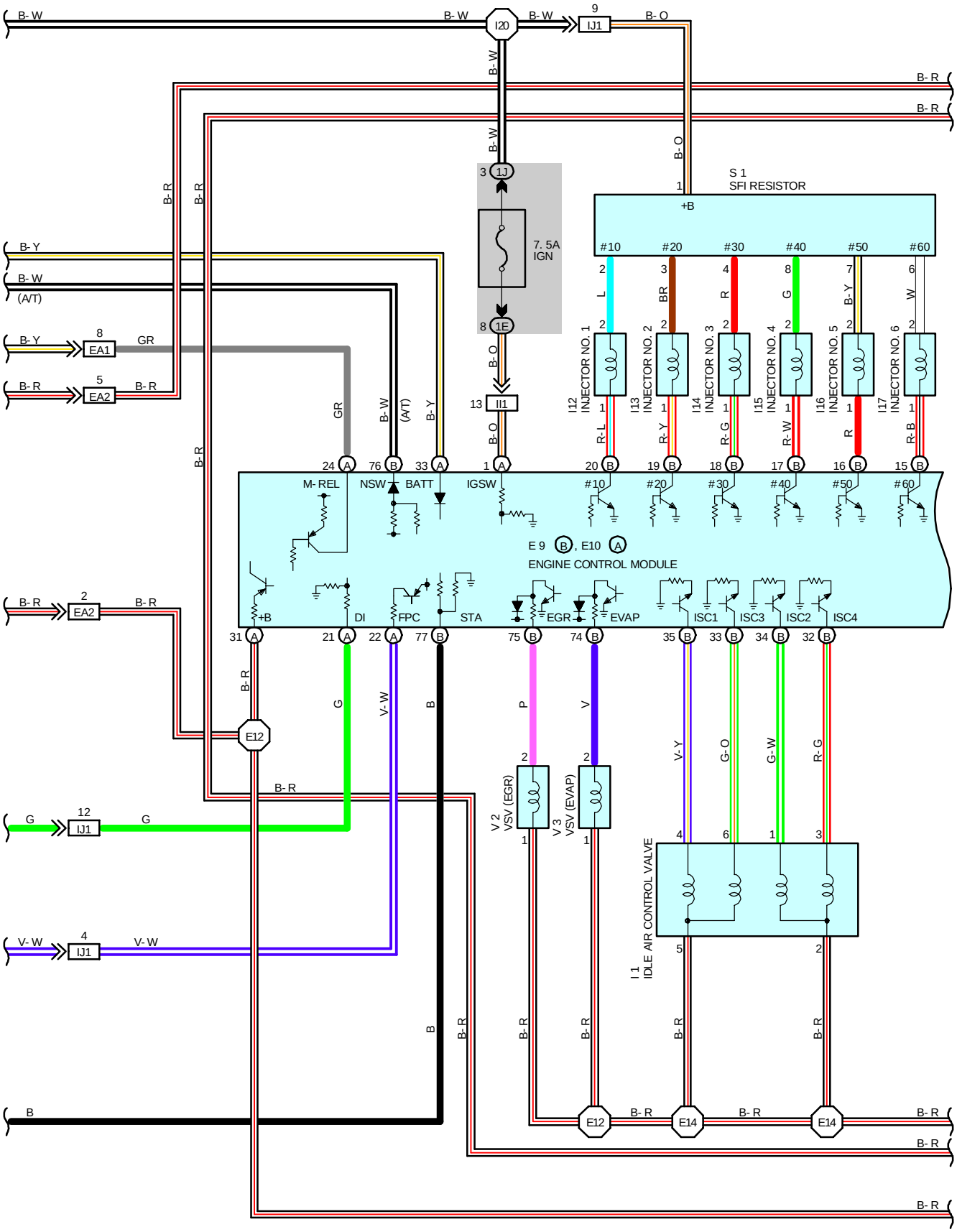
B- W
I20
IJ1
B- O
B- R
B- Y
(A/T)
EA1
EA2
GR
1J
7. 5A
IGN
1E
S 1
SFI RESISTOR
+B
#10
#20
#30
#40
#50
#60
INJECTOR NO. 1
INJECTOR NO. 2
INJECTOR NO. 3
INJECTOR NO. 4
INJECTOR NO. 5
INJECTOR NO. 6
II1
M- REL
NSW
BATT
IGSW
E 9 , E10
ENGINE CONTROL MODULE
DI
FPC
STA
EGR
EVAP
ISC1
ISC3
ISC2
ISC4
E12
E14
VSV (EGR)
VSV (EVAP)
IDLE AIR CONTROL VALVE

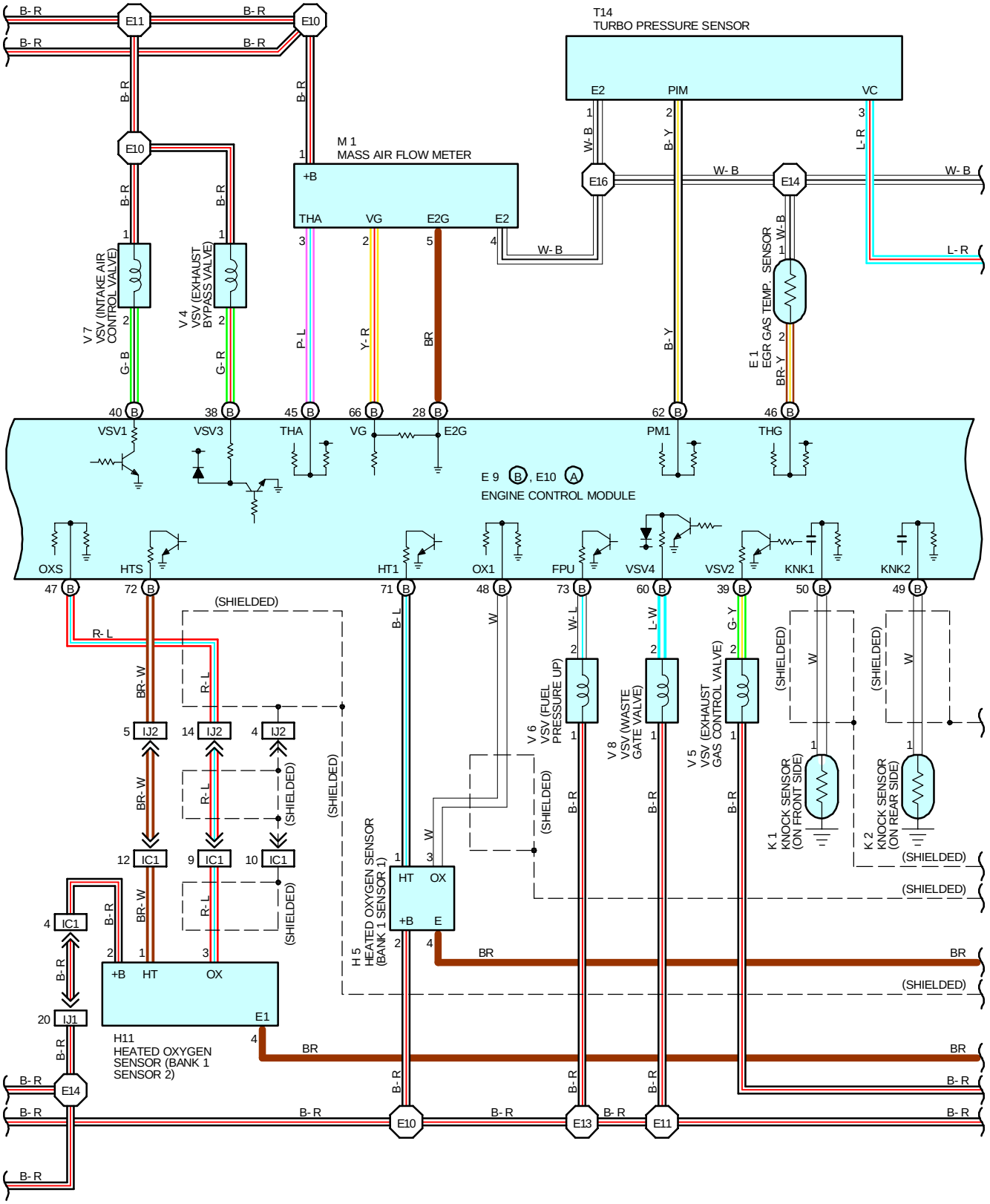
T14
TURBO PRESSURE SENSOR
E2
PIM
VC
M 1
MASS AIR FLOW METER
+B
THA
VG
E2G
E2
E16
E14
W- B
L- R
B- R
B- Y
W- L
G- Y
L- W
BR
P- L
Y- R
G- B
G- R
BR- Y
V 7
VSV (INTAKE AIR CONTROL VALVE)
V 4
VSV (EXHAUST BYPASS VALVE)
E 1
EGR GAS TEMP. SENSOR
VSV1
VSV3
PM1
THG
E 9 B , E10 A
ENGINE CONTROL MODULE
OXS
HTS
HT1
OX1
FPU
VSV4
VSV2
KNK1
KNK2
R- L
BR- W
(SHIELDED)
IJ2
IC1
IJ1
H11
HEATED OXYGEN SENSOR (BANK 1 SENSOR 2)
+B
HT
OX
E1
H 5
HEATED OXYGEN SENSOR (BANK 1 SENSOR 1)
V 6
VSV (FUEL PRESSURE UP)
V 8
VSV (WASTE GATE VALVE)
V 5
VSV (EXHAUST GAS CONTROL VALVE)
K 1
KNOCK SENSOR (ON FRONT SIDE)
K 2
KNOCK SENSOR (ON REAR SIDE)
E10
E13
E11

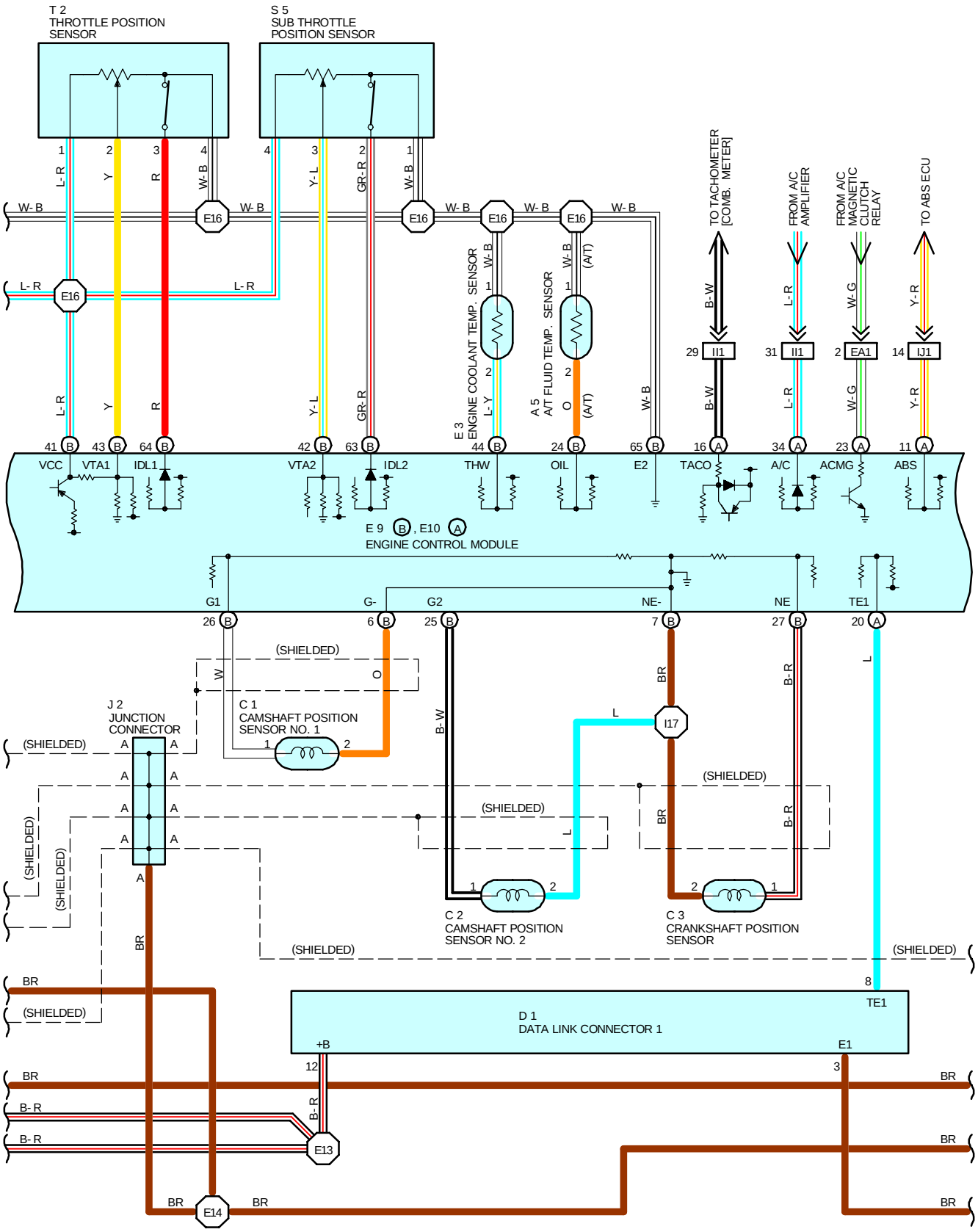
T 2
THROTTLE POSITION SENSOR
S 5
SUB THROTTLE POSITION SENSOR
E16
E 3
ENGINE COOLANT TEMP. SENSOR
A 5
A/T FLUID TEMP. SENSOR
TO TACHOMETER [COMB. METER]
FROM A/C AMPLIFIER
FROM A/C MAGNETIC CLUTCH RELAY
TO ABS ECU
I11
EA1
IJ1
VCC
VTA1
IDL1
VTA2
IDL2
THW
OIL
E2
TACO
A/C
ACMG
ABS
E 9 B , E10 A
ENGINE CONTROL MODULE
G1
G-
G2
NE-
NE
TE1
(SHIELDED)
J 2
JUNCTION CONNECTOR
C 1
CAMSHAFT POSITION SENSOR NO. 1
C 2
CAMSHAFT POSITION SENSOR NO. 2
C 3
CRANKSHAFT POSITION SENSOR
I17
D 1
DATA LINK CONNECTOR 1
+B
E1
E13
E14

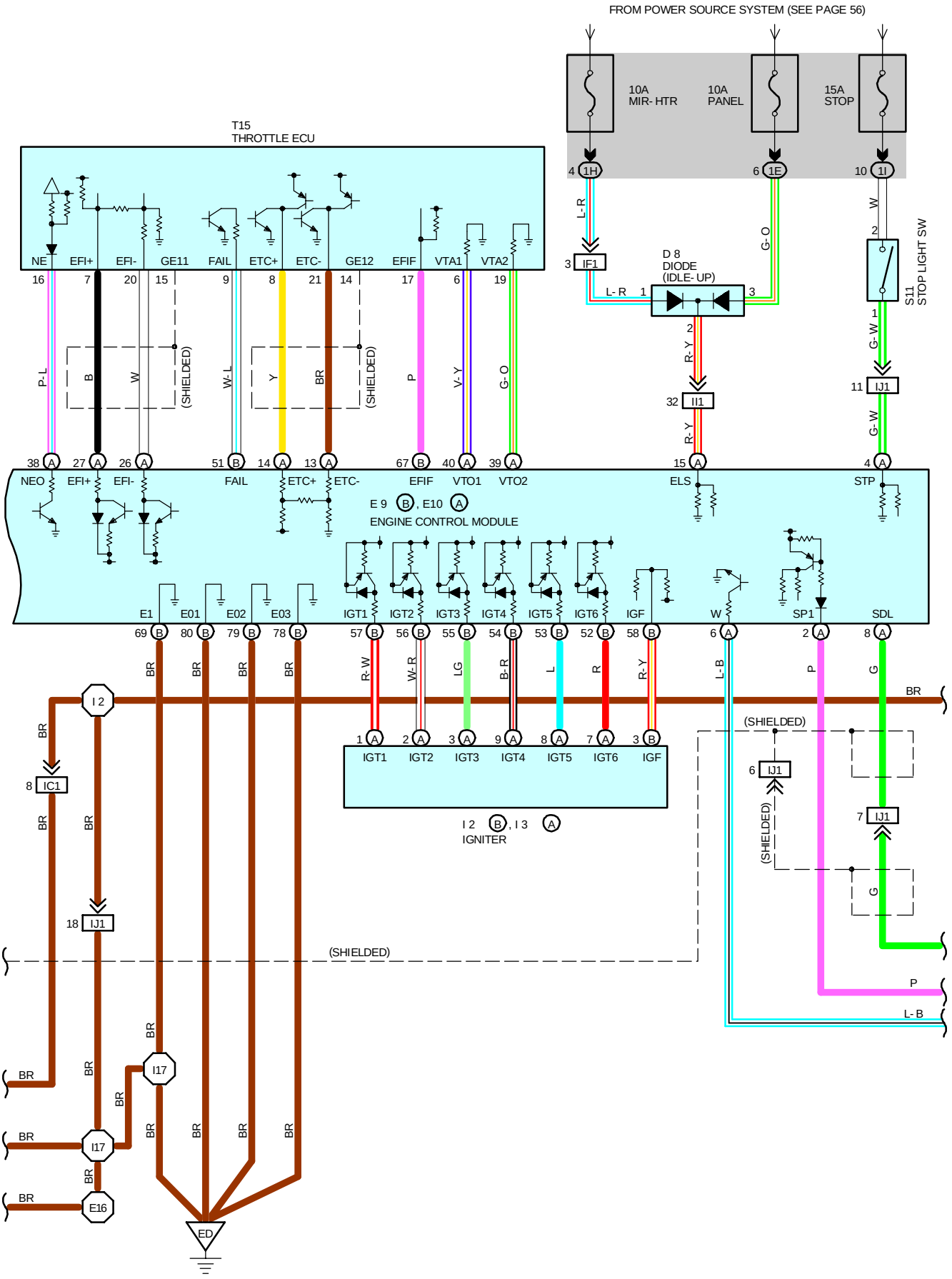
FROM POWER SOURCE SYSTEM (SEE PAGE 56)
10A MIR- HTR
10A PANEL
15A STOP
T15 THROTTLE ECU
NE
EFI+
EFI-
GE11
FAIL
ETC+
ETC-
GE12
EFIF
VTA1
VTA2
D 8 DIODE (IDLE- UP)
S11 STOP LIGHT SW
(SHIELDED)
NEO
ELS
STP
E 9 B, E10 A
ENGINE CONTROL MODULE
E1
E01
E02
E03
IGT1
IGT2
IGT3
IGT4
IGT5
IGT6
IGF
SP1
SDL
I 2 IGNITER
ED

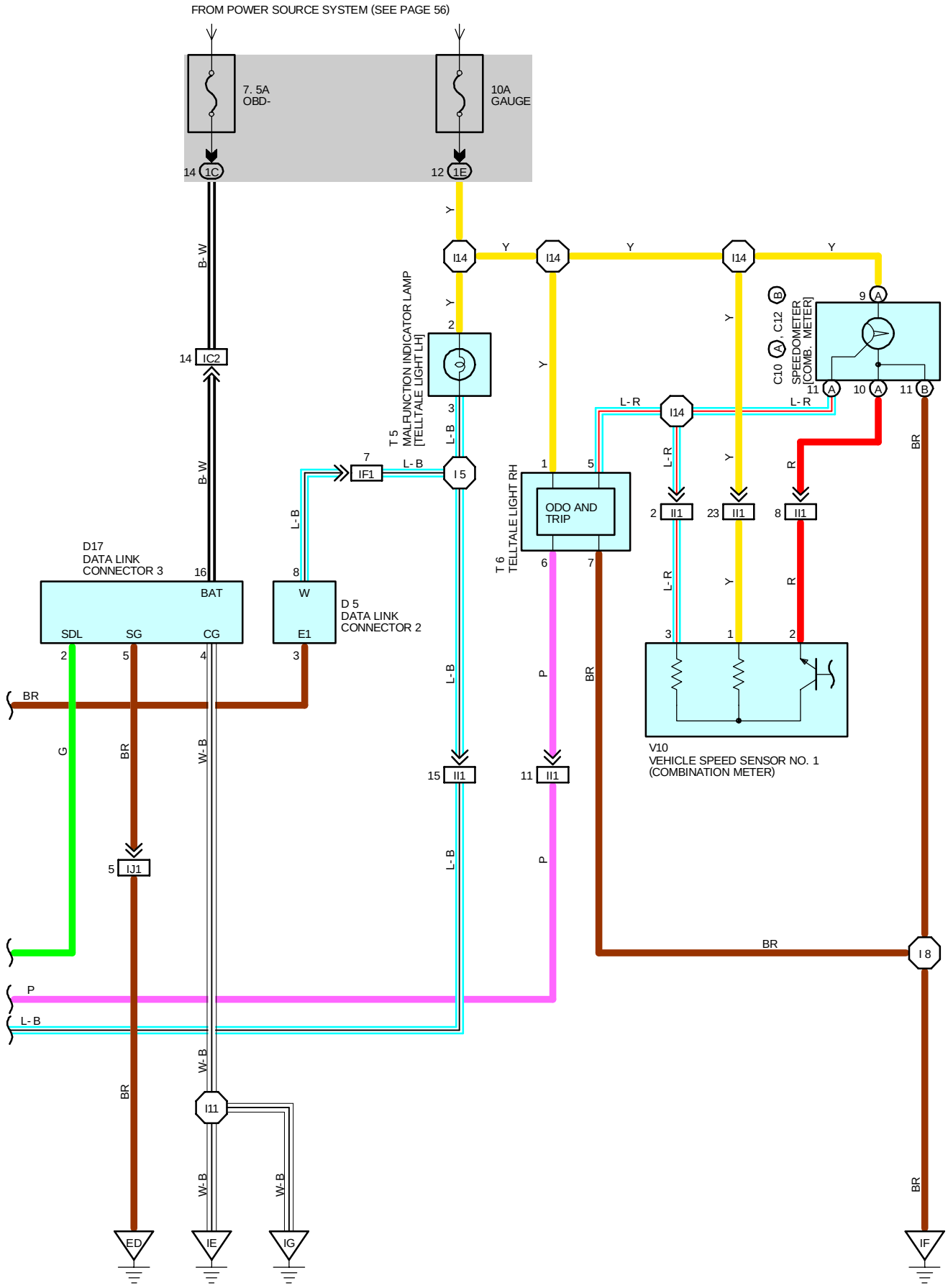
FROM POWER SOURCE SYSTEM (SEE PAGE 56)
7. 5A
OBD-
10A
GAUGE
14 1C
12 1E
B- W
14 IC2
B- W
D17
DATA LINK
CONNECTOR 3
16
BAT
SDL
SG
CG
2
5
4
BR
G
BR
W- B
5 IJ1
W- B
BR
W- B
W- B
I11
ED
IE
IG
Y
I14
Y
I14
Y
I14
Y
Y
2
3
T 5
MALFUNCTION INDICATOR LAMP
[TELLTALE LIGHT LH]
L- B
7
IF1
L- B
I 5
L- B
8
W
E1
3
D 5
DATA LINK
CONNECTOR 2
L- B
L- B
15 II1
L- B
T 6
TELLTALE LIGHT RH
1
5
ODO AND
TRIP
6
7
P
11 II1
P
BR
L- R
I14
L- R
L- R
2 II1
23 II1
8 II1
L- R
Y
R
3
1
2
V10
VEHICLE SPEED SENSOR NO. 1
(COMBINATION METER)
C10 , C12
SPEEDOMETER
[COMB. METER]
B
A
9 A
11 A
10 A
11 B
BR
BR
BR
I 8
P
L- B
IF
ED
IE
IG

SERVICE HINTS

EFI MAIN RELAY

②3- ②5 : CLOSED WITH THE IGNITION SW AT **ON** POSITION

EFI NO. 2 RELAY

②3- ②5 : CLOSED WITH THE IGNITION SW AT **ON** POSITION

E3 ENGINE COOLANT TEMP. SENSOR

1-2 : **10-20** KΩ (**-20** •C, **-4** •F)
4-7 KΩ (**0**•C, **32**•F)
2-3 KΩ (**20**•C, **68**•F)
0.9-1.3 KΩ (**40**•C, **104**•F)
0.4-0.7 KΩ (**60**•C, **140**•F)
0.2-0.4 KΩ (**80**•C, **176**•F)

I1 IDLE AIR CONTROL VALVE

1, 3-2 : APPROX. **10-30** Ω
4, 6-5 : APPROX. **10-30** Ω

I12, I13, I14, I15, I16, I17 INJECTOR

1-2 : APPROX. **13.8** Ω

T2 THROTTLE POSITION SENSOR

1-4 : APPROX. **4-9** KΩ
1-3 : **3.3-10.0** KΩ WITH THROTTLE VALVE FULLY **OPENED** POSITION
0.2-0.8 KΩ WITH CLEARANCE BETWEEN LEVER AND STOP SCREW **0** MM (**0** IN.)
1-2 : **0-2.3** KΩ WITH CLEARANCE BETWEEN LEVER AND STOP SCREW **0.45** MM (**0.0177** IN.)
INFINITY WITH CLEARANCE BETWEEN LEVER AND STOP SCREW **0.55** MM (**0.0216** IN.)

E9 (B), E10 (A) ENGINE CONTROL MODULE

(VOLTAGE AT ENGINE CONTROL MODULE WIRING CONNECTORS)
BATT-E1 : ALWAYS **9-14** VOLTS
IGSW-E1 : **9-14** VOLTS WITH THE IGNITION SW ON
M-REL-E : **9-14** VOLTS WITH THE IGNITION SW ON
+B-E1 : **9-14** VOLTS WITH THE IGNITION SW ON
IDL1-E2 : **9-14** VOLTS WITH THE IGNITION SW ON AND THE THROTTLE VALVE FULLY OPEN
0-1.5 VOLTS WITH THE IGNITION SW ON AND THE THROTTLE VALVE FULLY CLOSED
VTA1-E2 : **0.3-0.8** VOLTS WITH THE IGNITION SW ON AND THE THROTTLE VALVE FULLY CLOSED
3.2-4.9 VOLTS WITH THE IGNITION SW ON AND THE THROTTLE VALVE OPEN
THA-E2 : **0.5-3.4** VOLTS WITH THE IGNITION SW ON AND THE INTAKE AIR TEMP. **20**•C (**68**•F)
THW-E2 : **0.2-1.0** VOLTS WITH THE IGNITION SW ON AND THE COOLANT TEMP. **80**•C (**176**•F)
STA-E1 : **6-14** VOLTS WITH THE ENGINE CRANKING
W-E1 : **9-14** VOLTS WITH ENGINE IDLING
IGF-E1 : PULSE GENERATION (ENGINE IDLING)
NSW-E1 : **0-3** VOLTS WITH THE IGNITION SW ON AND THE SHIFT LEVER **P** OR **N** POSITION
9-14 VOLTS WITH THE IGNITION SW ON AND THE SHIFT LEVER EXCEPT **P** OR **N** POSITION
SP1 : PULSE GENERATION
TE1-E1 : **9-14** VOLTS WITH THE IGNITION SW ON
A/C-E1 : **0-1.5** VOLTS WITH THE IGNITION SW ON AND THE A/C OFF
7.5-14 VOLTS WITH THE IGNITION SW ON AND THE A/C ON
ELS-E1 : **9-14** VOLTS WITH THE TAILLIGHT ON, DEFOGGER ON
0-1.5 VOLTS WITH THE TAILLIGHT OFF, DEFOGGER OFF
STP-E1 : **7.5-14** VOLTS WITH THE STOP LIGHT SW ON (BRAKE PEDAL DEPRESSED)
0-1.5 VOLTS WITH THE STOP LIGHT SW OFF
ISC1, ISC2, ISC3, ISC4-E1 : PULSE GENERATION (ENGINE IDLING)
#10, #20, #30, #40, #50, #60-E01, E02 : PULSE GENERATION (ENGINE IDLING)
(RESISTANCE OF ENGINE CONTROL MODULE WIRING CONNECTORS)
IDL1-E2 : INFINITY WITH THE THROTTLE VALVE OPEN
0-2.3 KΩ WITH THE THROTTLE VALVE FULLY CLOSED
VTA1-E2 : **3.3** KΩ- **10**.0 KΩ WITH THE THROTTLE VALVE FULLY OPEN
200 Ω -**800** Ω WITH THE THROTTLE VALVE FULLY CLOSED
VCC-E2 : **4** KΩ -**9** KΩ
THA-E2 : **2** KΩ -**3** KΩ WITH THE INTAKE AIR TEMP. **20**•C (**68**•F)
THW-E2 : **200** Ω -**400** Ω WITH THE COOLANT TEMP. **80**•C (**176**•F)
ISC1, ISC2, ISC3, ISC4- +B : **10-30** Ω
#10, #20, #30, #40, #50, #60- +B : **13.2-14.2** Ω

: PARTS LOCATION

CODE	SEE PAGE	CODE	SEE PAGE	CODE	SEE PAGE
A5	24 (2JZ-GTE)	H5	24	S1	25
C1	24	H11	29	S5	25
C2	24	I1	25 (2JZ-GTE)	S11	29
C3	24 (2JZ-GTE)	I2 B	25	T2	25 (2JZ-GTE)
C9	28	I3 A	25	T5	29
C10 A	28	I12	25 (2JZ-GTE)	T6	29
C12 B	28	I13	25 (2JZ-GTE)	T14	25
D1	24 (2JZ-GTE)	I14	25 (2JZ-GTE)	T15	29
D5	28	I15	25 (2JZ-GTE)	V2	25 (2JZ-GTE)
D8	28	I16	25 (2JZ-GTE)	V3	25 (2JZ-GTE)
D17	28	I17	25 (2JZ-GTE)	V4	25
E1	24 (2JZ-GTE)	I19	29	V5	25
E3	24 (2JZ-GTE)	J2	29	V6	25 (2JZ-GTE)
E9 B	29	K1	25 (2JZ-GTE)	V7	25
E10 A	29	K2	25 (2JZ-GTE)	V8	25
F14	30	M1	25	V10	25 (2JZ-GTE)
F15	30	P2	25 (2JZ-GTE)		

: RELAY BLOCKS

CODE	SEE PAGE	RELAY BLOCKS (RELAY BLOCK LOCATION)
2	22	R/B NO. 2 (ENGINE COMPARTMENT LEFT)

: JUNCTION BLOCK AND WIRE HARNESS CONNECTOR

CODE	SEE PAGE	JUNCTION BLOCK AND WIRE HARNESS (CONNECTOR LOCATION)
1C	20	FLOOR NO. 2 WIRE AND J/B NO. 1 (LEFT KICK PANEL)
1E	20	INSTRUMENT PANEL WIRE AND J/B NO. 1 (LEFT KICK PANEL)
1H	20	COWL WIRE AND J/B NO. 1 (LEFT KICK PANEL)
1I		
1J		
1K		
2A	22	BATTERY AND J/B NO. 2 (ENGINE COMPARTMENT LEFT)

: CONNECTOR JOINING WIRE HARNESS AND WIRE HARNESS

CODE	SEE PAGE	JOINING WIRE HARNESS AND WIRE HARNESS (CONNECTOR LOCATION)
EA1	32 (2JZ-GTE)	ENGINE WIRE AND ENGINE ROOM MAIN WIRE (NEAR THE R/B NO. 2)
EA2	32	
IB1	36	ENGINE ROOM MAIN WIRE AND COWL WIRE (LEFT KICK PANEL)
IC1	36	FLOOR NO. 2 WIRE AND COWL WIRE (LEFT KICK PANEL)
IC2		
IF1	36	INSTRUMENT PANEL WIRE AND COWL WIRE (INSTRUMENT PANEL REINFORCEMENT LH)
II1	38	ENGINE WIRE AND INSTRUMENT PANEL WIRE (RIGHT KICK PANEL)
IJ1	38	ENGINE WIRE AND COWL WIRE (RIGHT KICK PANEL)
IJ2		
BP1	40	FUEL GAUGE WIRE AND FLOOR NO. 2 WIRE (LUGGAGE ROOM FRONT LH)

: GROUND POINTS

CODE	SEE PAGE	GROUND POINTS LOCATION
EB	32 (2JZ-GTE)	FRONT SIDE OF LEFT FENDER
ED	32 (2JZ-GTE)	REAR SIDE OF INTAKE MANIFOLD
IE	36	LEFT KICK PANEL
IF		
IG	36	RIGHT KICK PANEL
BI	40	LEFT QUARTER PILLAR

: SPLICE POINTS

CODE	SEE PAGE	WIRE HARNESS WITH SPLICE POINTS	CODE	SEE PAGE	WIRE HARNESS WITH SPLICE POINTS
E7	32	ENGINE ROOM MAIN WIRE	I2	38	COWL WIRE
E10	32	ENGINE WIRE	I4	38	INSTRUMENT PANEL WIRE
E11			I5	38	INSTRUMENT PANEL WIRE
E12			I8		
E13			I11	38	COWL WIRE
E14			I14	38	INSTRUMENT PANEL WIRE
E16			I17	38	ENGINE WIRE
E17			I20	38	COWL WIRE

A 5 GRAY

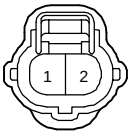

C 1 BLACK



C 2 BLACK



C 3 DARK GRAY



C 9

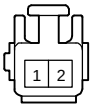

C10 (A) BLUE

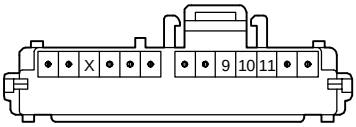

C12 (B)

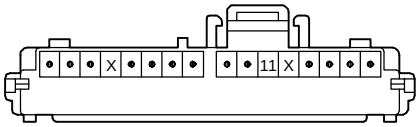

D 1 BLACK

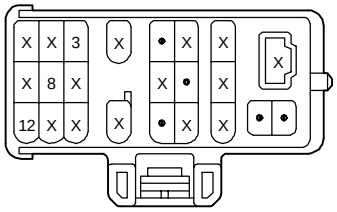

D 5 DARK GRAY

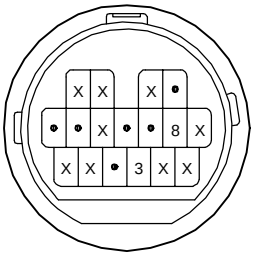

D 8 ORANGE

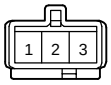

D17

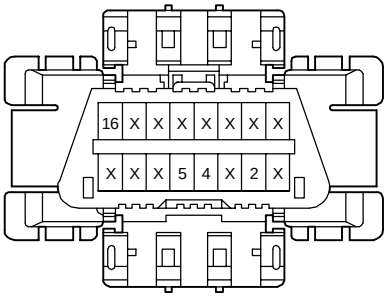

E 1 DARK GRAY

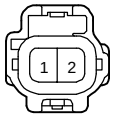

E 3 DARK GRAY



E 9 (B) DARK GRAY

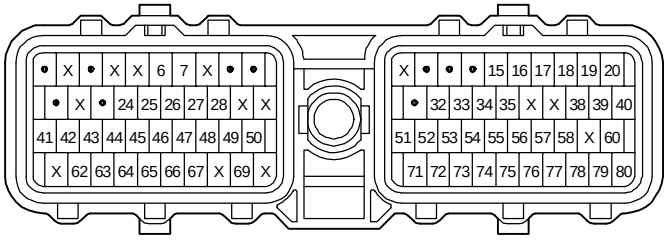

E10 (A) DARK GRAY

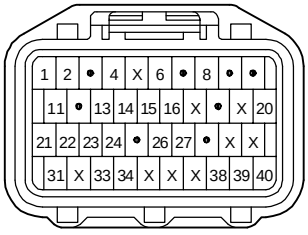

F14 DARK GRAY

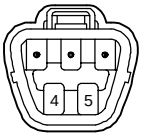

F15 BLACK

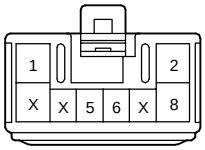

H 5 DARK GRAY



H11 GRAY



I 1 BLACK

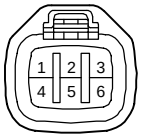

I 2 (B) BLACK



I 3 (A) BLACK

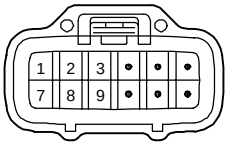

I12, I14, I16 DARK GRAY



I13, I15, I17 BROWN



I19

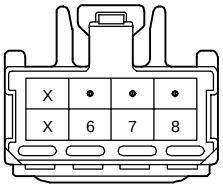

J 2

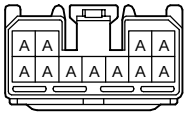

(HINT : SEE PAGE 7)

K 1, K 2 DARK GRAY



M 1 BLACK

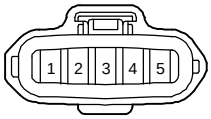

P 2 GRAY

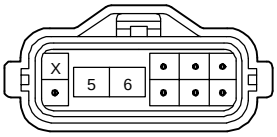

S 1 DARK GRAY

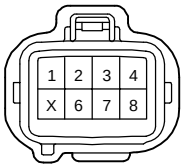

S 5 BLACK

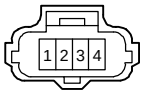

S11 BLUE

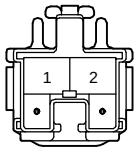

T 2 BLACK

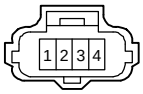

T 5

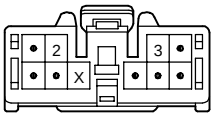

T 6

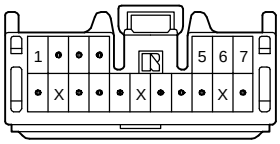

T14 BLACK

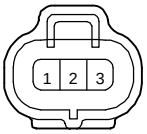

T15

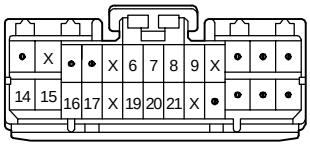

V 2 BLACK

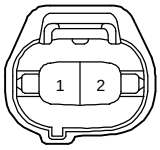

V 3 BROWN

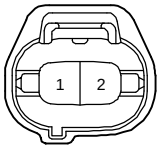

V 4 BLUE

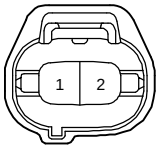

V 5 BLACK

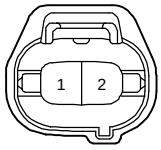

V 6 BLUE

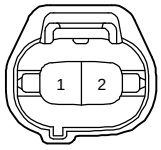

V 7 BLACK

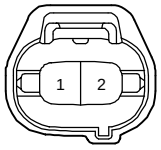

V 8 BLUE

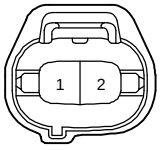

V10 BLACK



*1 : 2JZ-GTE
*2 : 2JZ-GE

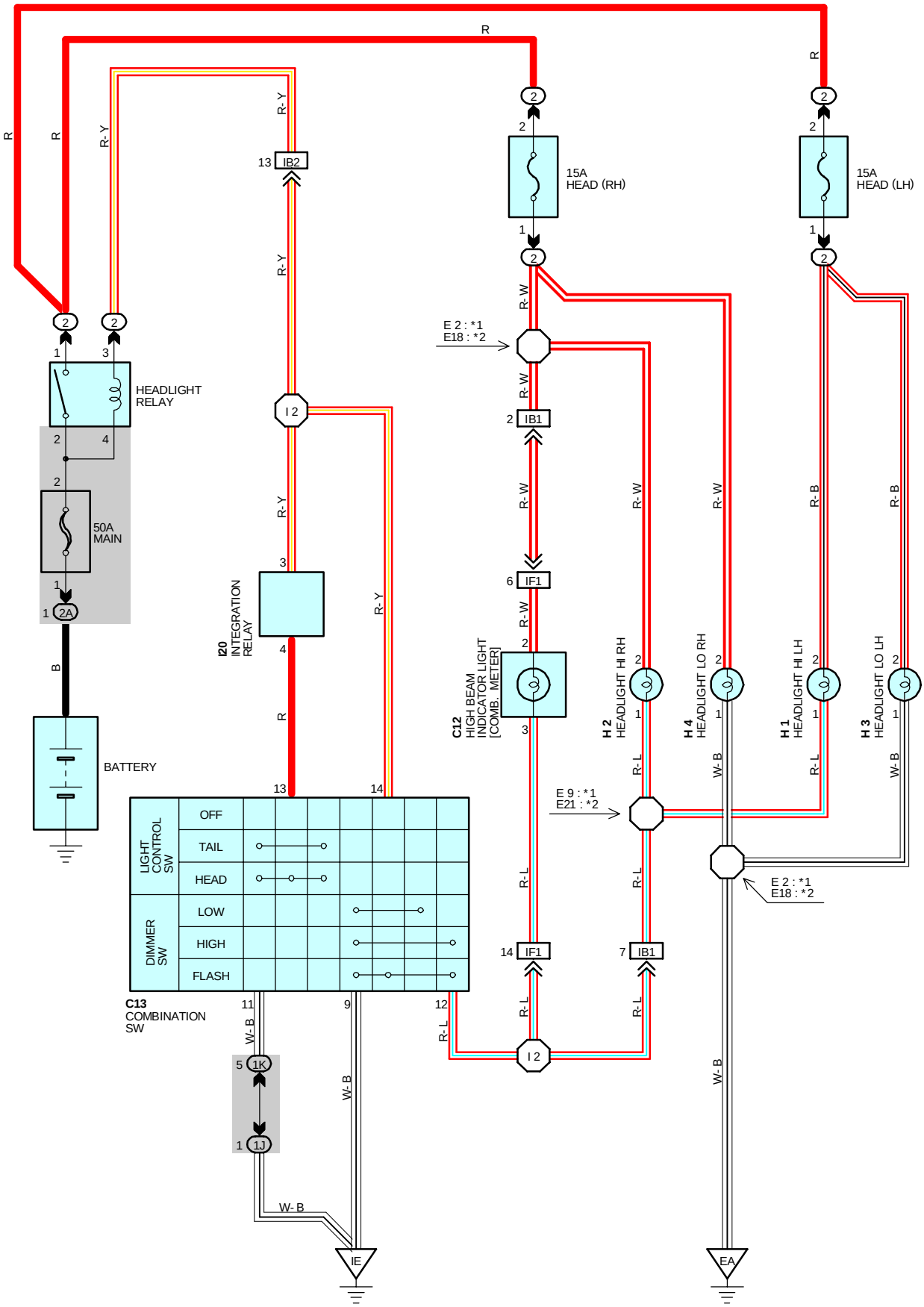

SERVICE HINTS

HEADLIGHT RELAY

2-1 : CLOSED WITH THE LIGHT CONTROL SW AT **HEAD** POSITION OR THE DIMMER SW AT **FLASH** POSITION

C13 LIGHT CONTROL SW [COMB. SW]

13-11 : CLOSED WITH THE LIGHT CONTROL SW AT **HEAD** POSITION

C13 LIGHT CONTROL SW [COMB. SW]

14-9 : CLOSED WITH THE DIMMER SW AT **FLASH** POSITION

12-9 : CLOSED WITH THE DIMMER SW AT **HIGH** OR **FLASH** POSITION

: PARTS LOCATION

CODE	SEE PAGE	CODE	SEE PAGE	CODE	SEE PAGE
C12	28	H2	24 (2JZ-GTE)	H4	24 (2JZ-GTE)
C13	28		27 (2JZ-GE)		27 (2JZ-GE)
H1	24 (2JZ-GTE)	H3	24 (2JZ-GTE)	I20	29
	27 (2JZ-GE)		27 (2JZ-GE)		

: RELAY BLOCKS

CODE	SEE PAGE	RELAY BLOCKS (RELAY BLOCK LOCATION)
2	22	R/B NO.2 (ENGINE COMPARTMENT LEFT)

: JUNCTION BLOCK AND WIRE HARNESS CONNECTOR

CODE	SEE PAGE	JUNCTION BLOCK AND WIRE HARNESS (CONNECTOR LOCATION)
1J	20	COWL WIRE AND J/B NO. 1 (LEFT KICK PANEL)
1K		
2A	22	BATTERY AND J/B NO. 2 (ENGINE COMPARTMENT LEFT)

: CONNECTOR JOINING WIRE HARNESS AND WIRE HARNESS

CODE	SEE PAGE	JOINING WIRE HARNESS AND WIRE HARNESS (CONNECTOR LOCATION)
IB1	36	ENGINE ROOM MAIN WIRE AND COWL WIRE (LEFT KICK PANEL)
IB2		
IF1	36	INSTRUMENT PANEL WIRE AND COWL WIRE (INSTRUMENT PANEL REINFORCEMENT LH)

: GROUND POINTS

CODE	SEE PAGE	GROUND POINTS LOCATION
EA	32 (2JZ-GTE)	FRONT SIDE OF RIGHT FENDER
	34 (2JZ-GE)	
IE	36	LEFT KICK PANEL

: SPLICE POINTS

CODE	SEE PAGE	WIRE HARNESS WITH SPLICE POINTS	CODE	SEE PAGE	WIRE HARNESS WITH SPLICE POINTS
E2	32	ENGINE ROOM MAIN WIRE	E21	34	ENGINE ROOM MAIN WIRE
E9			I2	38	COWL WIRE
E18	34				

C12

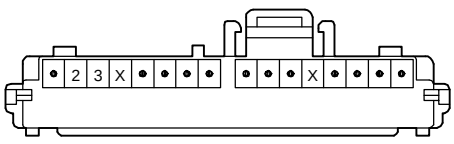

C13 BLACK

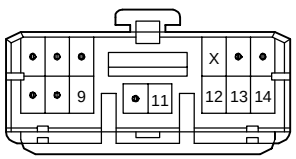

H 1 BLACK



H 2 BLACK



H 3 BROWN

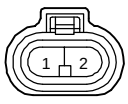

H 4 BROWN

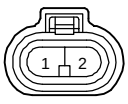

I20

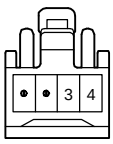

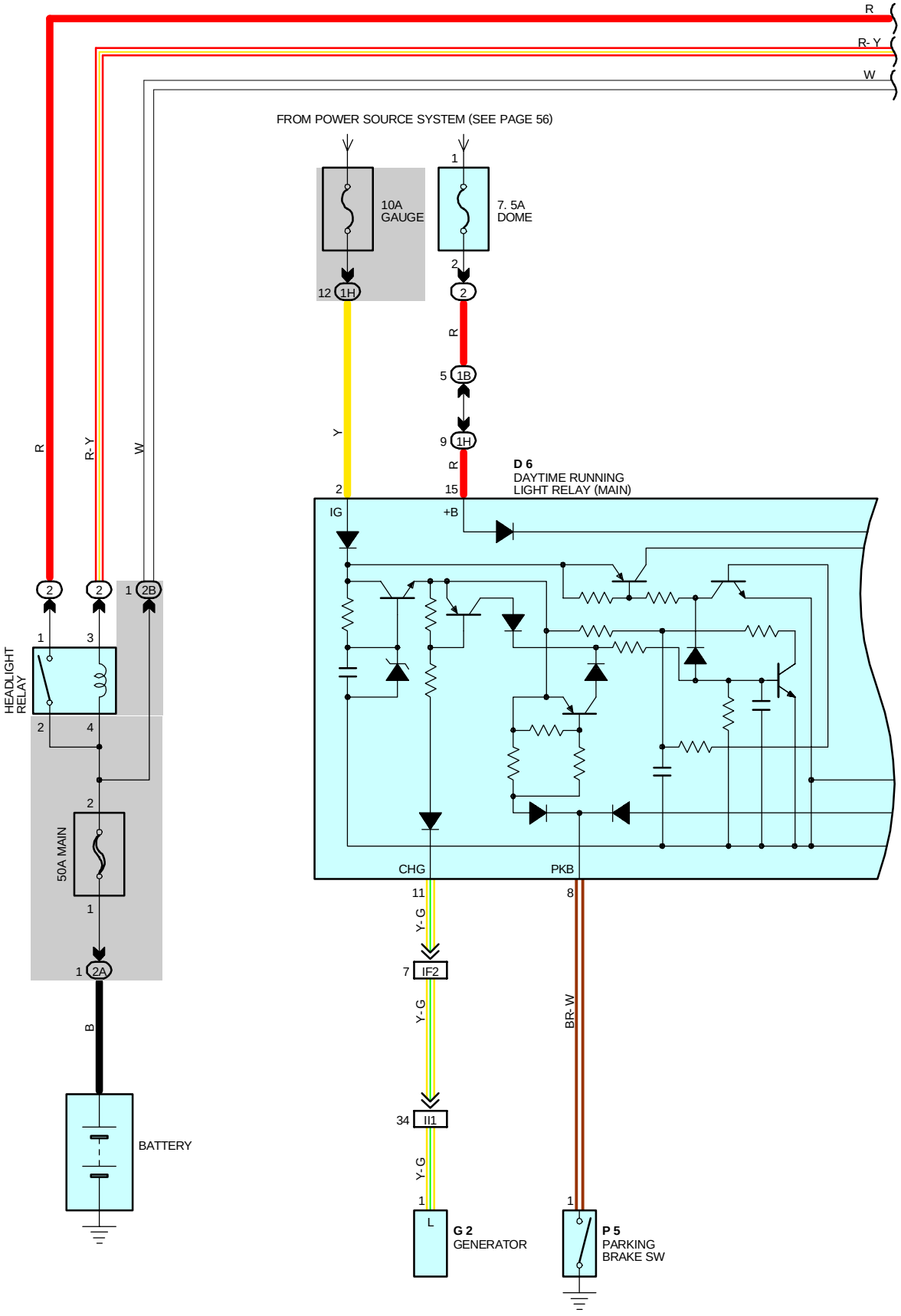
R
R- Y
W
FROM POWER SOURCE SYSTEM (SEE PAGE 56)
10A
GAUGE
7. 5A
DOME
12 1H
1
2
2
R
5 1B
Y
9 1H
R
2
15
D 6
DAYTIME RUNNING
LIGHT RELAY (MAIN)
IG
+B
CHG
PKB
2
2
1 2B
1
3
HEADLIGHT
RELAY
2
4
2
50A MAIN
1
1 2A
B
BATTERY
11
Y- G
7 IF2
Y- G
34 II1
Y- G
1
L
G 2
GENERATOR
8
BR- W
1
P 5
PARKING
BRAKE SW

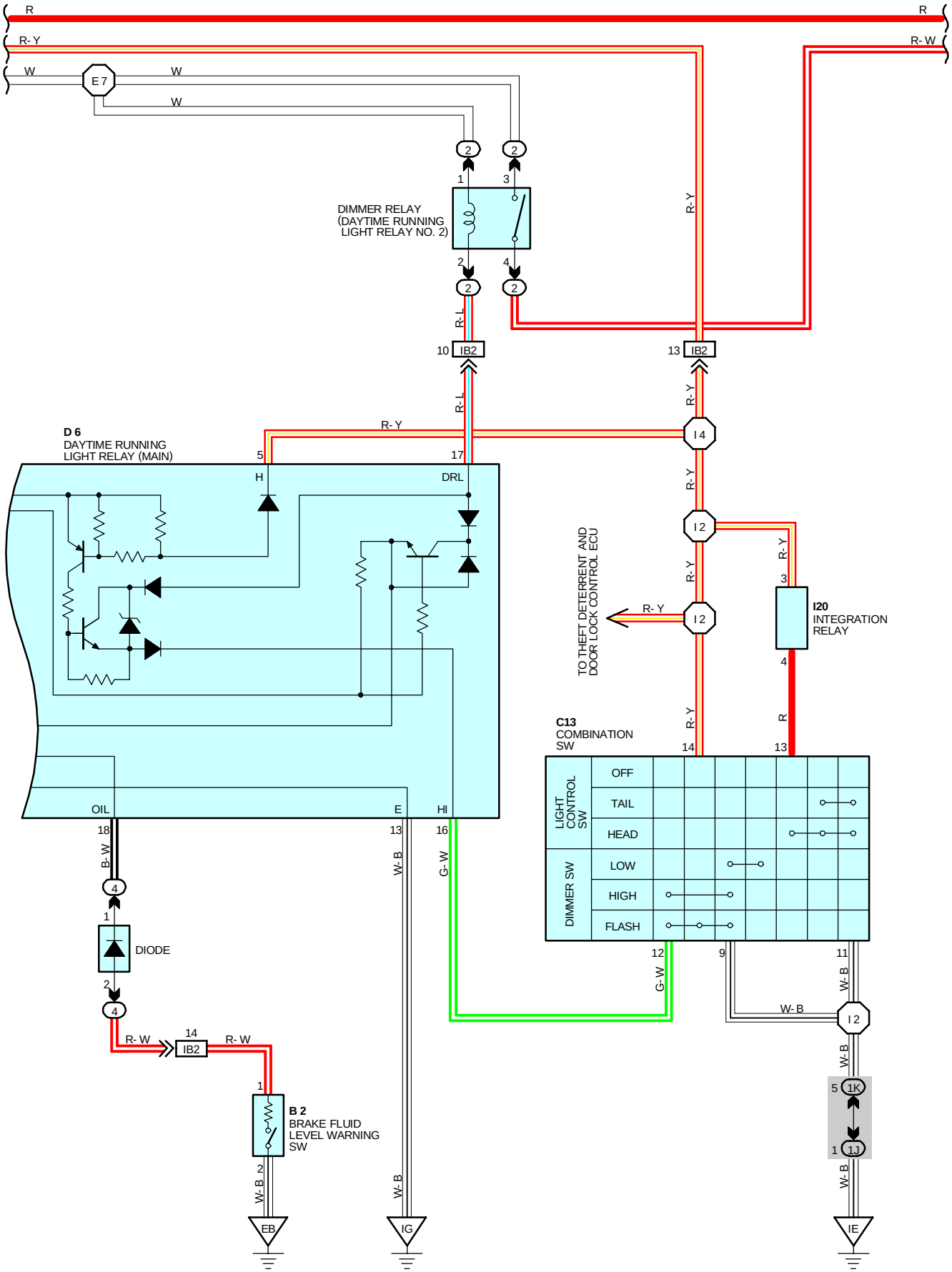
R
R
R- Y
R- W
W
E 7
W
W
2
2
1
3
DIMMER RELAY
(DAYTIME RUNNING
LIGHT RELAY NO. 2)
2
4
2
2
R- L
10
IB2
13
IB2
R- Y
R- L
R- Y
D 6
DAYTIME RUNNING
LIGHT RELAY (MAIN)
5
H
17
DRL
I 4
R- Y
I 2
R- Y
R- Y
3
TO THEFT DETERRENT AND
DOOR LOCK CONTROL ECU
R- Y
I 2
I20
INTEGRATION
RELAY
4
C13
COMBINATION
SW
R- Y
R
14
13
LIGHT
CONTROL
SW
OFF
TAIL
HEAD
DIMMER SW
LOW
HIGH
FLASH
OIL
E
HI
18
13
16
B- W
W- B
G- W
4
1
DIODE
2
4
12
9
11
G- W
W- B
W- B
R- W
14
IB2
R- W
I 2
W- B
1
5
1K
1
1J
B 2
BRAKE FLUID
LEVEL WARNING
SW
2
W- B
W- B
W- B
EB
IG
IE

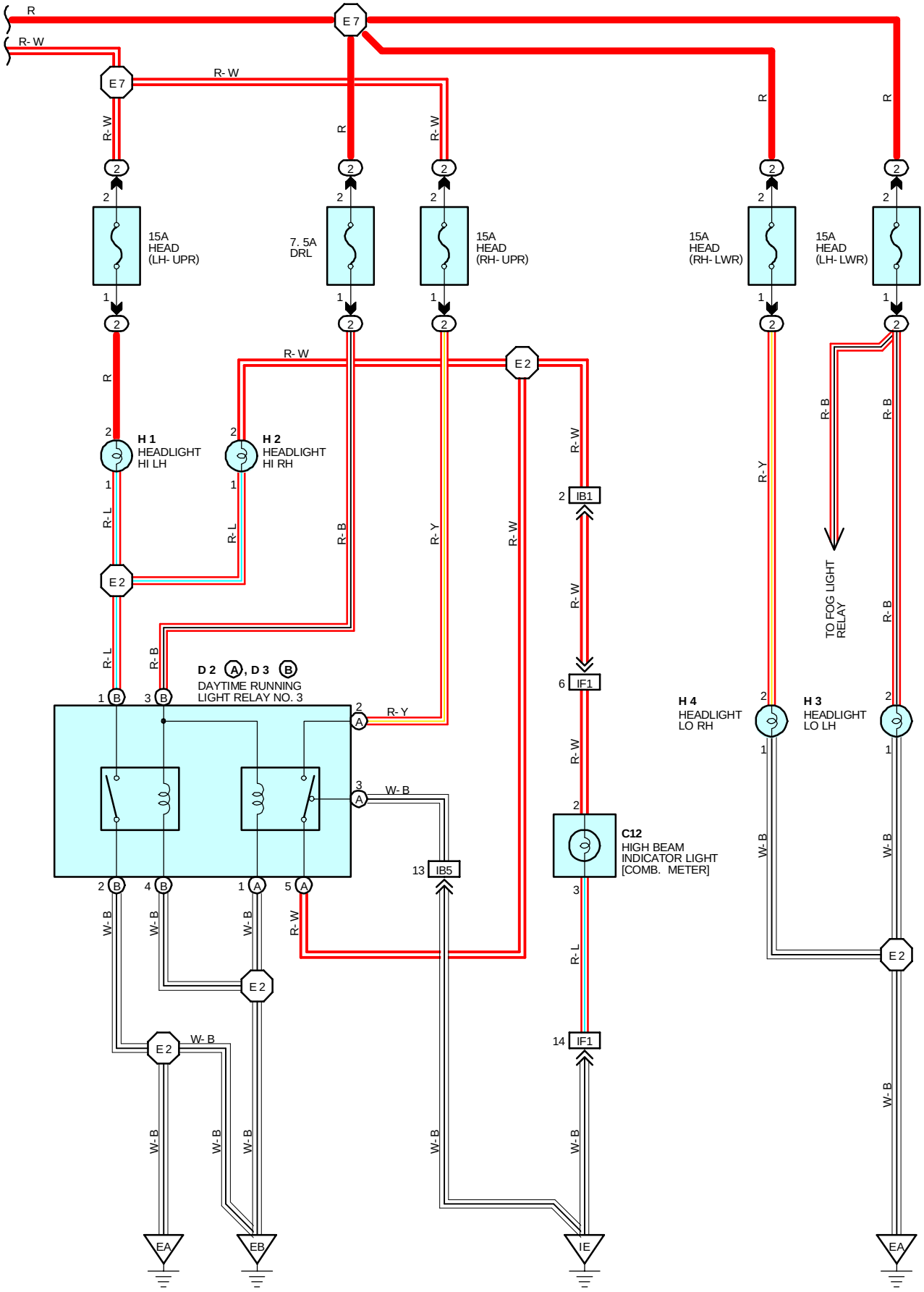
R
R- W
E 7
R- W
15A
HEAD
(LH- UPR)
7. 5A
DRL
15A
HEAD
(RH- UPR)
15A
HEAD
(RH- LWR)
15A
HEAD
(LH- LWR)
H 1
HEADLIGHT
HI LH
H 2
HEADLIGHT
HI RH
E 2
D 2 A, D 3 B
DAYTIME RUNNING
LIGHT RELAY NO. 3
R- Y
W- B
IB1
IF1
IB5
C12
HIGH BEAM
INDICATOR LIGHT
[COMB. METER]
TO FOG LIGHT
RELAY
H 4
HEADLIGHT
LO RH
H 3
HEADLIGHT
LO LH
EA
EB
IE

SYSTEM OUTLINE

VOLTAGE IS ALWAYS APPLIED FROM THE **MAIN** FUSE, THROUGH THE HEADLIGHT RELAY (COIL SIDE) TO **TERMINAL 5** OF THE DAYTIME RUNNING LIGHT RELAY (MAIN), **TERMINAL 6** OF THE INTEGRATION RELAY, **TERMINAL 14** OF THE DIMMER SW, DIMMER RELAY (DAYTIME RUNNING LIGHT RELAY NO. 2) (COIL SIDE), TO **TERMINAL 17** OF THE DAYTIME RUNNING LIGHT RELAY (MAIN). WHEN THE IGNITION SW IS TURNED ON, VOLTAGE FROM THE **GAUGE** FUSE IS APPLIED TO **TERMINAL 2** OF THE DAYTIME RUNNING LIGHT RELAY (MAIN).

1. DAYTIME RUNNING LIGHT OPERATION

WHEN THE ENGINE STARTS, VOLTAGE FROM **TERMINAL 'L'** OF THE GENERATOR IS APPLIED TO **TERMINAL 11** OF THE DAYTIME RUNNING LIGHT RELAY (MAIN). IF THE PARKING BRAKE LEVER IS PULLED UP (PARKING BRAKE SW ON) AT THIS TIME, THE DAYTIME RUNNING LIGHT SYSTEM DOES NOT OPERATE. WHEN THE PARKING BRAKE IS RELEASED (PARKING BRAKE SW OFF), A SIGNAL IS OUTPUT FROM **TERMINAL 1** OF THE PARKING BRAKE SW TO **TERMINAL 8** OF THE DAYTIME RUNNING LIGHT RELAY (MAIN). THIS ACTIVATES THE DAYTIME RUNNING LIGHT RELAY (MAIN), TURNING ON THE DIMMER RELAY (DAYTIME RUNNING LIGHT RELAY NO. 2). CURRENT ALSO FLOWS FROM THE **MAIN** FUSE TO THE DIMMER RELAY (DAYTIME RUNNING LIGHT RELAY NO. 2) (POINT SIDE) → **HEAD (LH-UPR)** FUSE → HEADLIGHT HI LH → HEADLIGHT HI RH → **TERMINAL (A)5** OF THE DAYTIME RUNNING LIGHT RELAY NO. 3 → **TERMINAL (A)3** → **GROUND**, CAUSING THE HEADLIGHTS TO LIGHT UP AT APPROX. **20%** OF THEIR NORMAL BRIGHTNESS.

ONCE THE DAYTIME RUNNING LIGHT RELAY (MAIN) HAS BEEN ACTIVATED AND THE HEADLIGHTS LIGHT UP, THE HEADLIGHTS REMAIN ON EVEN IF THE PARKING BRAKE LEVER IS ENGAGED AGAIN (PARKING BRAKE SW ON).

2. HEADLIGHT OPERATION

WHEN THE LIGHT CONTROL SW IS AT **HEAD** POSITION AND THE DIMMER SW AT **LOW** POSITION, CURRENT FLOWS FROM THE HEADLIGHT RELAY (COIL SIDE) TO **TERMINAL 3** OF THE INTEGRATION RELAY → **TERMINAL 4** → **TERMINAL 13** OF THE LIGHT CONTROL SW → **TERMINAL 11** → **GROUND**, ACTIVATING THE HEADLIGHT RELAY.

THIS CAUSES THE CURRENT TO FLOW FROM THE HEADLIGHT RELAY (POINT SIDE) TO THE **HEAD LWR** FUSE → HEADLIGHT LO → **GROUND**, CAUSING THE HEADLIGHTS TO LIGHT UP AT NORMAL BRIGHTNESS. SIMUTANEOUSLY, CURRENT FLOWS FROM THE **DRL** FUSE → DAYTIME RUNNING LIGHT RELAY NO. 3 (COIL SIDE) → **GROUND**, ACTIVATING RELAY NO. 3.

WHEN THE DIMMER SW IS AT **HIGH** POSITION, **TERMINAL 12** OF THE DIMMER SW OUTPUTS A SIGNAL TO **TERMINAL 16** OF THE DAYTIME RUNNING LIGHT RELAY (MAIN) TO ACTIVATE IT. THIS TURNS ON DIMMER RELAY (DAYTIME RUNNING LIGHT RELAY NO. 2). SO CURRENT FLOWS FROM THE DIMMER RELAY (DAYTIME RUNNING LIGHT RELAY NO. 2) (POINT SIDE) TO THE **HEAD (LH-UPR)** FUSE → HEADLIGHT HI LH → DAYTIME RUNNING LIGHT NO. 3 (POINT SIDE) → **GROUND**, AND FROM THE **HEAD (RH-UPR)** FUSE → DAYTIME RUNNING LIGHT RELAY NO. 3 (POINT SIDE) → HEADLIGHT HI RH → DAYTIME RUNNING LIGHT RELAY NO. 3 (POINT SIDE) → **GROUND**, CAUSING THE HEADLIGHTS TO OPERATE AT HI.

WHEN THE DIMMER SW IS AT **FLASH** POSITION, CURRENT FROM THE HEADLIGHT RELAY (COIL SIDE) FLOWS TO **TERMINAL 14** OF THE DIMMER SW → **TERMINAL 9** → **GROUND**, ACTIVATING THE RELAY. SIMULTANEOUSLY, CURRENT FROM THE HEADLIGHT RELAY (POINT SIDE) FLOWS TO HEADLIGHT LO, LIGHTING UP HEADLIGHT LO AND ACTIVATING DAYTIME RUNNING LIGHT RELAY NO. 3. THEN **TERMINAL 12** OF THE DIMMER SW OUTPUTS A SIGNAL TO **TERMINAL 16** OF THE DAYTIME RUNNING LIGHT RELAY (MAIN), ACTIVATING THE DAYTIME RUNNING LIGHT RELAY (MAIN) SO THAT CURRNET FLOWS TO HEADLIGHT HI LIKE IT DOES FOR **HIGH** POSITION. THIS CAUSES ALL HEADLIGHTS TO LIGHT UP.

SERVICE HINTS

D6 DAYTIME RUNNING LIGHT RELAY (MAIN)

15-GROUND	: ALWAYS APPROX. **12** VOLTS
2-GROUND	: APPROX. **12** VOLTS WITH TEH IGNITION SW AT **ON** POSITION
13-GROUND	: ALWAYS CONTINUITY
5-GROUND	: APPROX. **12** VOLTS WITH THE DAYTIME RUNNING LIGHT SYSTEM DOES NOT OPERATE OR THE LIGHT CONTROL SW AT **OFF** OR **TAIL** POSITION (WHEN THE CONNECTOR IS DISCONNECTED, ALWAYS APPROX. **12** VOLTS)
8-GROUND	: CONTINUITY WITH THE PARKING BRAKE LEVER RELEASED

HEADLIGHT (CANADA)

: PARTS LOCATION

CODE		SEE PAGE	CODE	SEE PAGE	CODE	SEE PAGE
B2		24 (2JZ-GTE)	D6	28	H4	24 (2JZ-GTE)
C12		28	G2	24 (2JZ-GTE)	I20	29
C13		28	H1	24 (2JZ-GTE)	P5	29
D2	A	24	H2	24 (2JZ-GTE)		
D3	B	24	H3	24 (2JZ-GTE)		

: RELAY BLOCKS

CODE	SEE PAGE	RELAY BLOCKS (RELAY BLOCK LOCATION)
2	22	R/B NO. 2 (ENGINE COMPARTMENT LEFT)
4	23	R/B NO. 4 (LEFT KICK PANEL)

: JUNCTION BLOCK AND WIRE HARNESS CONNECTOR

CODE	SEE PAGE	JUNCTION BLOCK AND WIRE HARNESS (CONNECTOR LOCATION)
1B	20	ENGINE ROOM MAIN WIRE AND J/B NO. 1 (LEFT KICK PANEL)
1H	20	COWL WIRE AND J/B NO. 1 (LEFT KICK PANEL)
1J		
1K		
2A	22	BATTERY AND J/B NO. 2 (ENGINE COMPARTMENT LEFT)
2B	22	ENGINE ROOM MAIN AND J/B NO. 2 (ENGINE COMPARTMENT LEFT)

: CONNECTOR JOINING WIRE HARNESS AND WIRE HARNESS

CODE	SEE PAGE	JOINING WIRE HARNESS AND WIRE HARNESS (CONNECTOR LOCATION)
IB1	36	ENGINE ROOM MAIN WIRE AND COWL WIRE (LEFT KICK PANEL)
IB2		
IB5	36	ENGINE ROOM MAIN WIRE AND COWL WIRE (RIGHT KICK PANEL)
IF1	36	INSTRUMENT PANEL WIRE AND COWL WIRE (INSTRUMENT PANEL REINFORCEMENT LH)
IF2		
II1	38	ENGINE WIRE AND INSTRUMENT PANEL WIRE (RIGHT KICK PANEL)

: GROUND POINTS

CODE	SEE PAGE	GROUND POINTS LOCATION
EA	32 (2JZ-GTE)	FRONT SIDE OF RIGHT FENDER
EB	32 (2JZ-GTE)	FRONT SIDE OF LEFT FENDER
IE	36	LEFT KICK PANEL
IG	36	RIGHT KICK PANEL

: SPLICE POINTS

CODE	SEE PAGE	WIRE HARNESS WITH SPLICE POINTS	CODE	SEE PAGE	WIRE HARNESS WITH SPLICE POINTS
E2	32	ENGINE ROOM MAIN WIRE	I2	38	COWL WIRE
E7			I4		

B 2 GRAY



C12

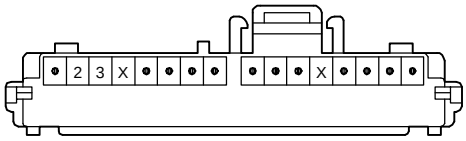

C13 BLACK

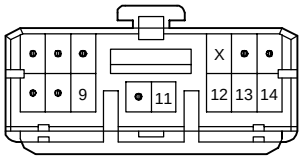

D 2 (A) GRAY

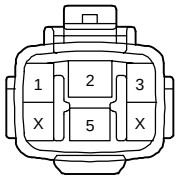

D 3 (B) GRAY

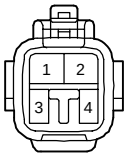

D 6 GRAY

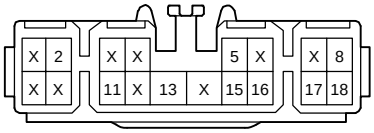

G 2 BLACK

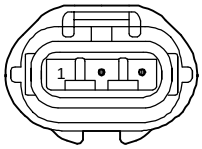

H 1 BLACK

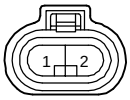

H 2 BLACK

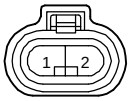

H 3 BROWN

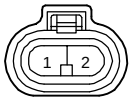

H 4 BROWN

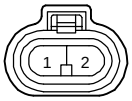

I20

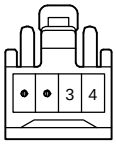

P 5



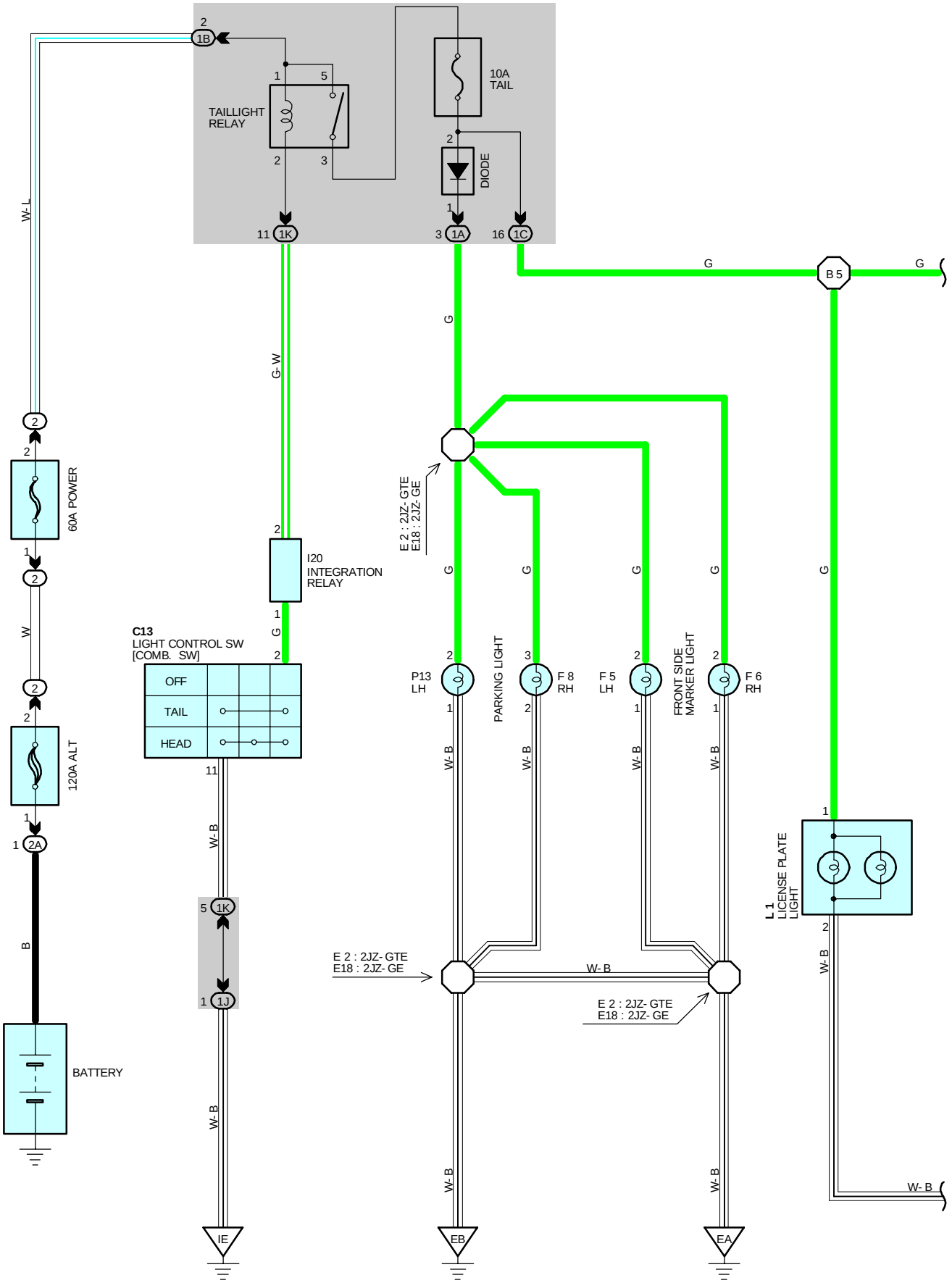
2
1B
1
5
TAILLIGHT
RELAY
2
3
10A
TAIL
2
DIODE
1
11 1K
3 1A
16 1C
W- L
G
B 5
G
G
G- W
2
60A POWER
1
2
W
2
2
120A ALT
1
1 2A
B
BATTERY
2
I20
INTEGRATION
RELAY
1
G
2
C13
LIGHT CONTROL SW
[COMB. SW]
OFF
TAIL
HEAD
11
W- B
5 1K
1 1J
W- B
IE
E 2 : 2JZ- GTE
E18 : 2JZ- GE
G
G
G
G
G
P13
LH
2
1
W- B
PARKING LIGHT
3
F 8
RH
2
1
W- B
F 5
LH
2
1
W- B
FRONT SIDE
MARKER LIGHT
F 6
RH
2
1
W- B
E 2 : 2JZ- GTE
E18 : 2JZ- GE
W- B
E 2 : 2JZ- GTE
E18 : 2JZ- GE
W- B
EB
W- B
EA
1
L 1
LICENSE PLATE
LIGHT
2
W- B
W- B

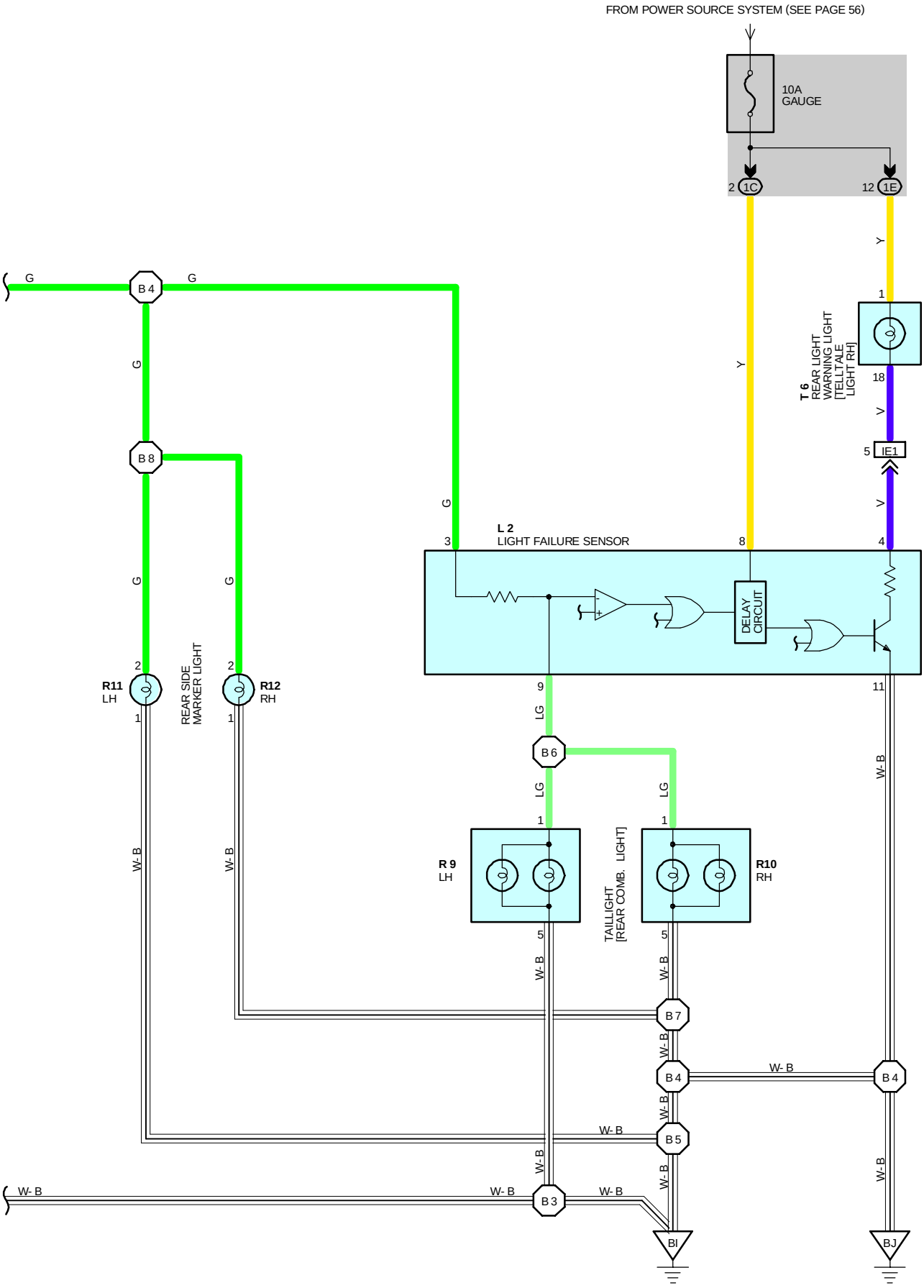
FROM POWER SOURCE SYSTEM (SEE PAGE 56)
10A
GAUGE
2 1C
12 1E
Y
1
T 6
REAR LIGHT
WARNING LIGHT
[TELLTALE
LIGHT RH]
18
V
5 IE1
V
Y
G
B 4
G
G
B 8
G
G
G
L 2
LIGHT FAILURE SENSOR
3
8
4
DELAY
CIRCUIT
9
11
LG
B 6
LG
LG
1
1
R 9
LH
TAILLIGHT
[REAR COMB. LIGHT]
R10
RH
5
5
W- B
W- B
W- B
W- B
W- B
B 7
W- B
B 4
W- B
B 4
W- B
B 5
W- B
W- B
W- B
W- B
W- B
B 3
W- B
W- B
BI
BJ
2
2
R11
LH
REAR SIDE
MARKER LIGHT
R12
RH
1
1
W- B
W- B

TAILLIGHT

SYSTEM OUTLINE

WHEN THE LIGHT CONTROL SW IS TURNED TO **TAIL** OR **HEAD** POSITION. THE CURRENT FLOWS TO **TERMINAL 3** OF THE LIGHT FAILURE SENSOR THROUGH THE **TAIL** FUSE.
WHEN THE IGNITION SW IS TURNED ON, THE CURRENT FLOWS FROM THE **GAUGE** FUSE TO **TERMINAL 8** OF THE LIGHT FAILURE SENSOR, AND ALSO FLOWS THROUGH THE REAR LIGHT WARNING LIGHT TO **TERMINAL 4** OF THE LIGHT FAILURE SENSOR.

TAILLIGHT DISCONNECTION WARNING

WITH THE IGNITION SW ON AND THE LIGHT CONTROL SW TURNED TO **TAIL** OR **HEAD** POSITION, IF THE TAILLIGHT CIRCUIT IS OPEN, THE LIGHT FAILURE SENSOR DETECTS THE FAILURE BY THE CHANGE IN CURRENT FLOWING FROM **TERMINAL 3** OF THE LIGHT FAILURE SENSOR TO **TERMINAL 9**, AND THE WARNING CIRCUIT OF THE LIGHT FAILURE SENSOR IS ACTIVATED.
AS A RESULT, THE CURRENT FLOWS FROM **TERMINAL 4** OF THE LIGHT FAILURE SENSOR → **TERMINAL 11** → **GROUND** AND TURNS THE REAR LIGHT WARNING LIGHT ON, WHICH REMAINS ON UNTIL THE LIGHT CONTROL SW IS TURNED OFF.

SERVICE HINTS

TAILLIGHT RELAY

5-3 : CLOSED WITH THE LIGHT CONTROL SW AT **TAIL** OR **HEAD** POSITION

L2 LIGHT FAILURE SENSOR

4,8-GROUND : APPROX. **12** VOLTS WITH THE IGNITION SW AT **ON** POSITION
3-GROUND : APPROX. **12** VOLTS WITH THE LIGHT CONTROL SW AT **TAIL** OR **HEAD** POSITION
11-GROUND : ALWAYS CONTINUITY

: PARTS LOCATION

CODE	SEE PAGE	CODE	SEE PAGE	CODE	SEE PAGE
C13	28	F8	26 (2JZ-GE)	R9	30
F5	24 (2JZ-GTE)	I20	29	R10	30
	26 (2JZ-GE)	L1	30	R11	30
F6	24 (2JZ-GTE)	L2	30	R12	30
	26 (2JZ-GE)	P13	24 (2JZ-GTE)	T6	29
F8	24 (2JZ-GTE)		26 (2JZ-GE)		

: RELAY BLOCKS

CODE	SEE PAGE	RELAY BLOCKS (RELAY BLOCK LOCATION)
2	22	R/B NO. 2 (ENGINE COMPARTMENT LEFT)

: JUNCTION BLOCK AND WIRE HARNESS CONNECTOR

CODE	SEE PAGE	JUNCTION BLOCK AND WIRE HARNESS (CONNECTOR LOCATION)
1A	20	ENGINE ROOM MAIN WIRE AND J/B NO. 1 (LEFT KICK PANEL)
1B		
1C	20	FLOOR NO. 2 WIRE AND J/B NO. 1 (LEFT KICK PANEL)
1E	20	INSTRUMENT PANEL WIRE AND J/B NO. 1
1J	20	COWL WIRE AND J/B NO. 1 (LEFT KICK PANEL)
1K		
2A	22	BATTERY AND J/B NO. 2 (ENGINE COMPARTMENT LEFT)

: CONNECTOR JOINING WIRE HARNESS AND WIRE HARNESS

CODE	SEE PAGE	JOINING WIRE HARNESS AND WIRE HARNESS (CONNECTOR LOCATION)
IE1	36	INSTRUMENT PANEL WIRE AND FLOOR NO. 2 WIRE (LEFT KICK PANEL)

: GROUND POINTS

CODE	SEE PAGE	GROUND POINTS LOCATION
EA	32 (2JZ-GTE) 34 (2JZ-GE)	FRONT SIDE OF RIGHT FENDER
EB	32 (2JZ-GTE) 34 (2JZ-GE)	FRONT SIDE OF LEFT FENDER
IE	36	LEFT KICK PANEL
BI	40	LEFT QUARTER PILLAR
BJ	40	LOWER BACK PANEL CENTER

: SPLICE POINTS

CODE	SEE PAGE	WIRE HARNESS WITH SPLICE POINTS	CODE	SEE PAGE	WIRE HARNESS WITH SPLICE POINTS
E2	32	ENGINE ROOM MAIN WIRE	B5	40	FLOOR NO. 2 WIRE
E18	34		B6		
B3	40	FLOOR NO. 2 WIRE	B7		
B4			B8		

C13 BLACK

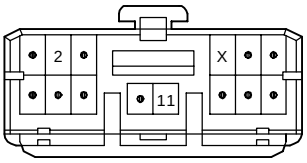

F 5 GRAY



F 6 GRAY



F 8 GRAY

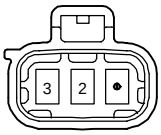

I20

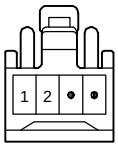

L 1 GRAY

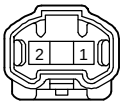

L 2

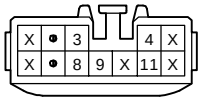

R 9

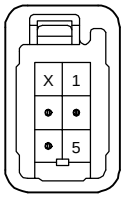

P13 GRAY



R10

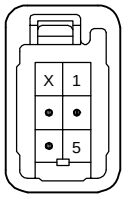

R11 GRAY



R12 GRAY



T 6

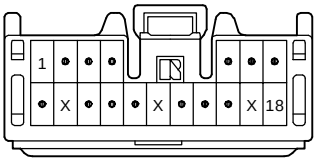

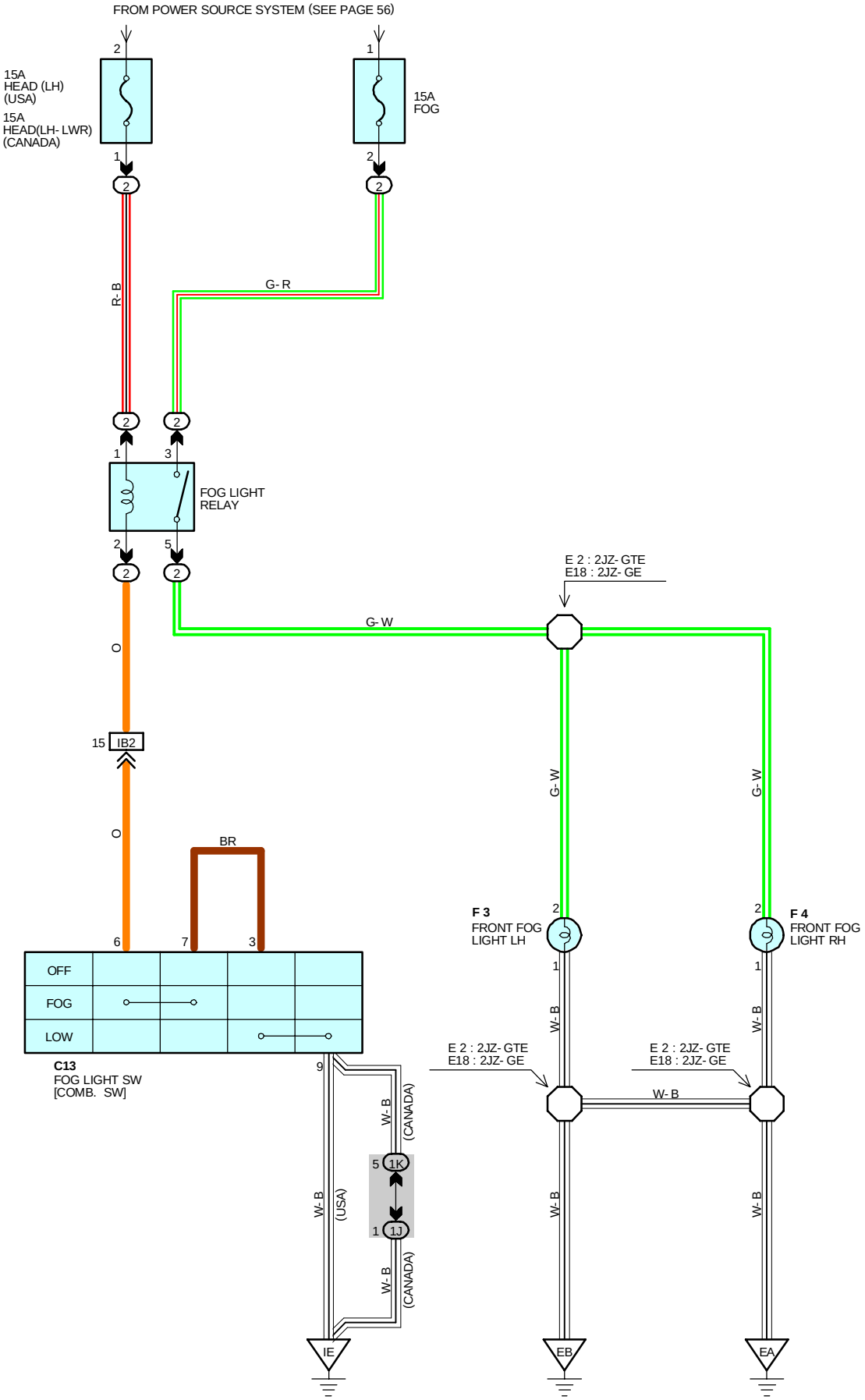
FROM POWER SOURCE SYSTEM (SEE PAGE 56)
15A
HEAD (LH)
(USA)
15A
HEAD(LH- LWR)
(CANADA)
15A
FOG
R- B
G- R
FOG LIGHT
RELAY
E 2 : 2JZ- GTE
E18 : 2JZ- GE
G- W
O
15 IB2
BR
OFF
FOG
LOW
C13
FOG LIGHT SW
[COMB. SW]
F 3
FRONT FOG
LIGHT LH
F 4
FRONT FOG
LIGHT RH
W- B
(CANADA)
(USA)
1K
1J
IE
EB
EA

SERVICE HINTS

FOG LIGHT RELAY

(2)3-(2)5 : CLOSED WITH THE LIGHT CONTROL SW AT **HEAD** POSITION, DIMMER SW AT **LOW** POSITION AND THE FOG LIGHT SW **ON** POSITION

: PARTS LOCATION

CODE	SEE PAGE	CODE	SEE PAGE	CODE	SEE PAGE
C13	28	F3	26 (2JZ-GE)	F4	26 (2JZ-GE)
F3	24 (2JZ-GTE)	F4	24 (2JZ-GTE)		

: RELAY BLOCKS

CODE	SEE PAGE	RELAY BLOCKS (RELAY BLOCK LOCATION)
2	22	R/B NO. 2 (ENGINE COMPARTMENT LEFT)

: JUNCTION BLOCK AND WIRE HARNESS CONNECTOR

CODE	SEE PAGE	JUNCTION BLOCK AND WIRE HARNESS (CONNECTOR LOCATION)
1J	20	COWL WIRE AND J/B NO. 1 (LEFT KICK PANEL)
1K		

: CONNECTOR JOINING WIRE HARNESS AND WIRE HARNESS

CODE	SEE PAGE	JOINING WIRE HARNESS AND WIRE HARNESS (CONNECTOR LOCATION)
IB2	36	ENGINE ROOM MAIN WIRE AND COWL WIRE (LEFT KICK PANEL)

: GROUND POINTS

CODE	SEE PAGE	GROUND POINTS LOCATION
EA	32 (2JZ-GTE)	FRONT SIDE OF RIGHT FENDER
	34 (2JZ-GE)	
EB	32 (2JZ-GTE)	FRONT SIDE OF LEFT FENDER
	34 (2JZ-GE)	
IE	36	LEFT KICK PANEL

: SPLICE POINTS

CODE	SEE PAGE	WIRE HARNESS WITH SPLICE POINTS	CODE	SEE PAGE	WIRE HARNESS WITH SPLICE POINTS
E2	32	ENGINE ROOM MAIN WIRE	E18	34	ENGINE ROOM MAIN WIRE

C13 BLACK

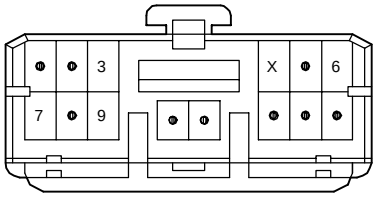

F 3 GRAY

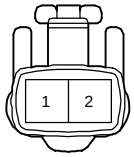

F 4 GRAY

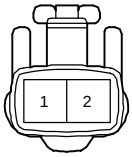

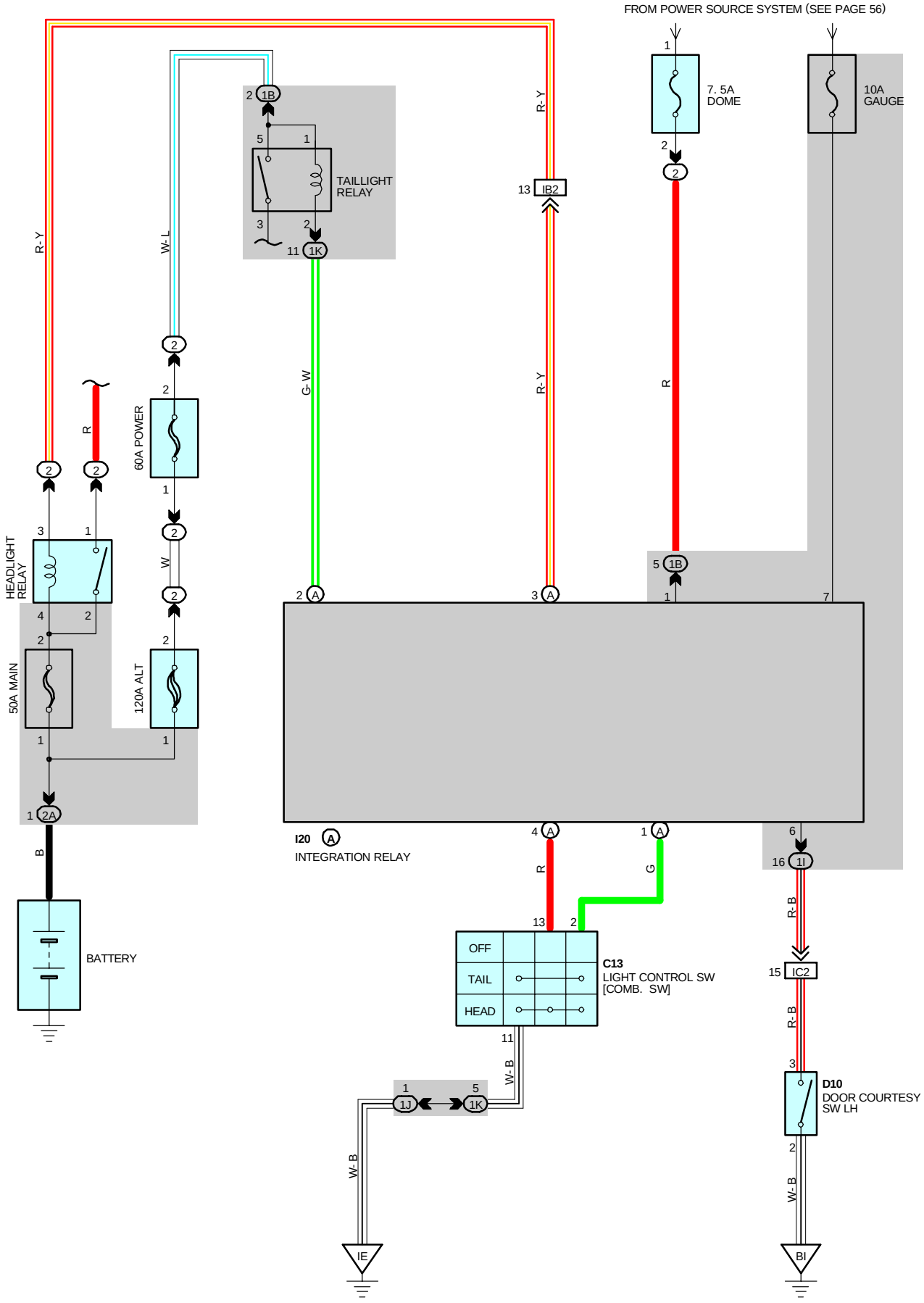
FROM POWER SOURCE SYSTEM (SEE PAGE 56)
7. 5A
DOME
10A
GAUGE
TAILLIGHT
RELAY
HEADLIGHT
RELAY
60A POWER
50A MAIN
120A ALT
BATTERY
R- Y
W- L
G- W
R
W
B
I20
INTEGRATION RELAY
C13
LIGHT CONTROL SW
[COMB. SW]
OFF
TAIL
HEAD
D10
DOOR COURTESY
SW LH
W- B
R- B
IE
BI

SYSTEM OUTLINE

WITH THE IGNITION SW TURNED ON, THE CURRENT FLOWS TO **TERMINAL 7** OF THE INTEGRATION RELAY THROUGH **GAUGE** FUSE. VOLTAGE IS APPLIED AT ALL TIMES TO **TERMINAL (A) 2** OF THE INTEGRATION RELAY THROUGH THE TAILLIGHT RELAY COIL SIDE, AND TO **TERMINAL (A) 3** THROUGH THE HEADLIGHT RELAY COIL SIDE.

1. NORMAL LIGHTING OPERATION

<TURN TAILLIGHT ON>

WITH THE LIGHT CONTROL SW TURNED TO TAIL POSITION, A SIGNAL IS INPUT INTO **TERMINAL (A) 1** OF THE INTEGRATION RELAY. DUE TO THIS SIGNAL, THE CURRENT FLOWING TO **TERMINAL (A) 2** OF THE RELAY FLOWS TO **TERMINAL (A) 1** → **TERMINAL 2** OF THE LIGHT CONTROL SW → **TERMINAL 11** → TO **GROUND**, AND TAILLIGHT RELAY CAUSES TAILLIGHTS TO TURN ON.

<TURN HEADLIGHT ON>

WITH THE LIGHT CONTROL SW TURNED TO HEAD POSITION, A SIGNAL IS INPUT INTO **TERMINALS (A) 1** AND **(A) 4** OF THE INTEGRATION RELAY. DUE TO THIS SIGNAL, THE CURRENT FLOWING TO **TERMINAL (A) 3** OF THE RELAY FLOWS TO **TERMINAL (A) 4** → **TERMINAL 13** OF THE LIGHT CONTROL SW → **TERMINAL 11** → TO **GROUND** IN THE HEADLIGHT CIRCUIT, AND CAUSES TAILLIGHT AND HEADLIGHT RELAY TO TURN THE LIGHTS ON. THE TAILLIGHT CIRCUIT IS SAME AS ABOVE.

2. LIGHT AUTO TURN OFF OPERATION

WITH LIGHT ON AND IGNITION SW TURNED OFF (INPUT SIGNAL GOES TO **TERMINAL 7** OF THE RELAY), WHEN THE DRIVER'S DOOR IS OPENED (INPUT SIGNAL GOES TO **TERMINAL 6** OF THE RELAY), THE RELAY OPERATES AND THE CURRENT IS CUT OFF WHICH FLOWS FROM **TERMINAL (A) 2** OF THE RELAY TO **TERMINAL (A) 1** IN TAILLIGHT CIRCUIT AND FROM **TERMINAL (A) 3** TO **TERMINAL (A) 4** IN HEADLIGHT CIRCUIT.
AS A RESULT, ALL LIGHTS ARE TURNED OFF AUTOMATICALLY.

SERVICE HINTS

HEADLIGHT RELAY

2-1 : CLOSED WITH THE LIGHT CONTROL SW AT **HEAD** POSITION OR THE DIMMER SW AT **FLASH** POSITION (USA)
: CLOSED WITH THE ENGINE RUNNING AND THE PARKING BRAKE LEVER RELEASED (CANADA)

TAILLIGHT RELAY

3-5 : CLOSED WITH THE LIGHT CONTROL SW AT **TAIL** OR **HEAD** POSITION

D10 DOOR COURTESY SW LH

3-2 : CLOSED WITH THE LH DOOR OPEN

I20 (A) INTEGRATION RELAY

7-GROUND : APPROX. **12** VOLTS WITH THE IGNITION SW AT **ON** POSITION
6-GROUND : CONTINUITY WITH THE LH DOOR OPEN
1-GROUND : ALWAYS APPROX. **12** VOLTS
(A)2-GROUND : ALWAYS APPROX. **12** VOLTS
(A)3-GROUND : ALWAYS APPROX. **12** VOLTS
(A)4-GROUND : CONTINUITY WITH THE LIGHT CONTROL SW AT **HEAD** POSITION
(A)1-GROUND : CONTINUITY WITH THE LIGHT CONTROL SW AT **TAIL** OR **HEAD** POSITION

: PARTS LOCATION

CODE	SEE PAGE	CODE	SEE PAGE	CODE		SEE PAGE
C13	28	D10	30	I20	A	29

: RELAY BLOCKS

CODE	SEE PAGE	RELAY BLOCKS (RELAY BLOCK LOCATION)
2	22	R/B NO. 2 (ENGINE COMPARTMENT LEFT)

: JUNCTION BLOCK AND WIRE HARNESS CONNECTOR

CODE	SEE PAGE	JUNCTION BLOCK AND WIRE HARNESS (CONNECTOR LOCATION)
1B	20	ENGINE ROOM MAIN WIRE AND J/B NO. 1 (LEFT KICK PANEL)
1I	20	COWL WIRE AND J/B NO. 1 (LEFT KICK PANEL)
1J		
1K		
2A	22	BATTERY AND J/B NO. 2 (ENGINE COMPARTMENT LEFT)

: CONNECTOR JOINING WIRE HARNESS AND WIRE HARNESS

CODE	SEE PAGE	JOINING WIRE HARNESS AND WIRE HARNESS (CONNECTOR LOCATION)
IB2	36	ENGINE ROOM MAIN WIRE AND COWL WIRE (LEFT KICK PANEL)
IC2	36	FLOOR NO. 2 WIRE AND COWL WIRE (LEFT KICK PANEL)

: GROUND POINTS

CODE	SEE PAGE	GROUND POINTS LOCATION
IE	36	LEFT KICK PANEL
BI	40	LEFT QUARTER PILLAR

C13 BLACK

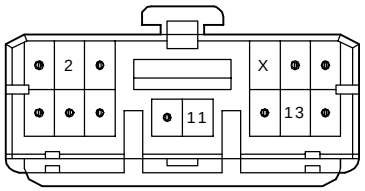

D10

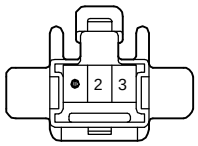

I20 (A)

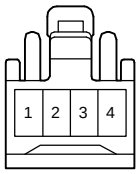

C10 (B) BLUE

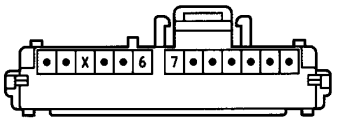

C12 (A)

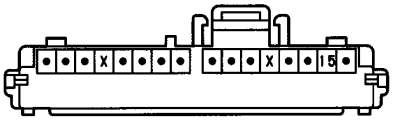

C13 BLACK

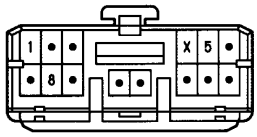

F 7 GRAY

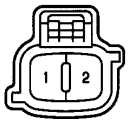

F 8 GRAY

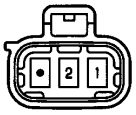

H10



J 1

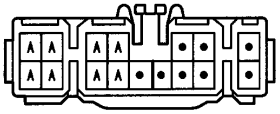

(HINT:SEE PAGE 7)

R 9

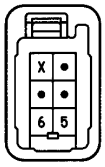

R10

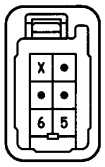

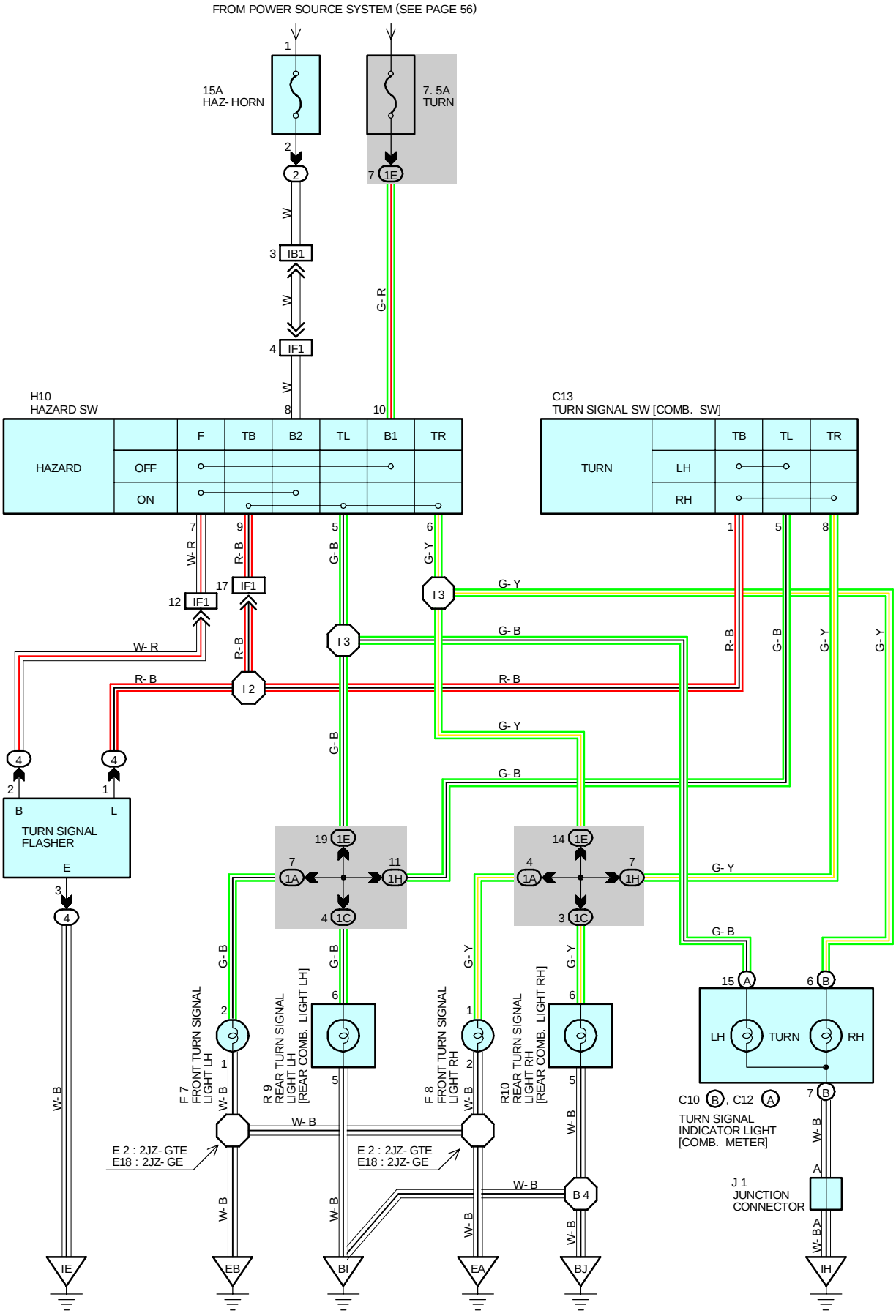
FROM POWER SOURCE SYSTEM (SEE PAGE 56)
15A
HAZ- HORN
7. 5A
TURN
H10
HAZARD SW
HAZARD
OFF
ON
F
TB
B2
TL
B1
TR
C13
TURN SIGNAL SW [COMB. SW]
TURN
LH
RH
TB
TL
TR
IB1
IF1
I 2
I 3
TURN SIGNAL
FLASHER
B
L
E
F 7
FRONT TURN SIGNAL
LIGHT LH
R 9
REAR TURN SIGNAL
LIGHT LH
[REAR COMB. LIGHT LH]
F 8
FRONT TURN SIGNAL
LIGHT RH
R10
REAR TURN SIGNAL
LIGHT RH
[REAR COMB. LIGHT RH]
LH
TURN
RH
C10 B, C12 A
TURN SIGNAL
INDICATOR LIGHT
[COMB. METER]
J 1
JUNCTION
CONNECTOR
B 4
E 2 : 2JZ- GTE
E18 : 2JZ- GE
E 2 : 2JZ- GTE
E18 : 2JZ- GE
IE
EB
BI
EA
BJ
IH
W
W- R
R- B
G- B
G- Y
W- B

SERVICE HINTS

TURN SIGNAL FLASHER

(4) 1-GROUND : CHANGES FROM APPROX. **12** VOLTS TO **0** VOLTS WITH THE IGNITION SW ON AND THE TURN SIGNAL SW LEFT OR RIGHT, OR WITH THE HAZARD WARNING SW ON.
(4) 2-GROUND : **12** VOLTS WITH THE IGNITION SW ON OR THE HAZARD SW ON
(4) 3-GROUND : ALWAYS CONTINUITY

: PARTS LOCATION

CODE		SEE PAGE	CODE	SEE PAGE	CODE	SEE PAGE
C10	B	28	F 7	26 (2JZ-GE)	J 1	29
C12	A	28	F 8	26 (2JZ-GTE)	R 9	30
C13		28		26 (2JZ-GE)	R10	30
F 7		24 (2JZ-GTE)	H10	29		

: RELAY BLOCKS

CODE	SEE PAGE	RELAY BLOCKS (RELAY BLOCK LOCATION)
2	22	R/B NO. 2 (ENGINE COMPARTMENT LEFT)
4	23	R/B NO. 4 (LEFT KICK PANEL)

: JUNCTION BLOCK AND WIRE HARNESS CONNECTOR

CODE	SEE PAGE	JUNCTION BLOCK AND WIRE HARNESS (CONNECTOR LOCATION)
1A	20	ENGINE ROOM MAIN WIRE AND J/B NO. 1 (LEFT KICK PANEL)
1C	20	FLOOR NO. 2 WIRE AND J/B NO. 1 (LEFT KICK PANEL)
1E	20	INSTRUMENT PANEL WIRE AND J/B NO. 1 (LEFT KICK PANEL)
1H	20	COWL WIRE AND J/B NO. 1 (LEFT KICK PANEL)

: CONNECTOR JOINING WIRE HARNESS AND WIRE HARNESS

CODE	SEE PAGE	JOINING WIRE HARNESS AND WIRE HARNESS (CONNECTOR LOCATION)
IB1	36	ENGINE ROOM MAIN WIRE AND COWL WIRE (LEFT KICK PANEL)
IF1	36	INSTRUMENT PANEL WIRE AND COWL WIRE (INSTRUMENT PANEL REINFORCEMENT LH)

: GROUND POINTS

CODE	SEE PAGE	GROUND POINTS LOCATION
EA	32 (2JZ-GTE) 34 (2JZ-GE)	FRONT SIDE OF RIGHT FENDER
EB	32 (2JZ-GTE) 34 (2JZ-GE)	FRONT SIDE OF LEFT FENDER
IE	36	LEFT KICK PANEL
IH	36	RIGHT KICK PANEL
BI	40	LEFT QUARTER PILLAR
BJ	40	LOWER BACK PANEL CENTER

: SPLICE POINTS

CODE	SEE PAGE	WIRE HARNESS WITH SPLICE POINTS	CODE	SEE PAGE	WIRE HARNESS WITH SPLICE POINTS
E 2	32	ENGINE ROOM WIRE	I 3	38	INSTRUMENT PANEL WIRE
E18	34		B 4	40	FLOOR NO. 2 WIRE
I 2	38	COWL WIRE			

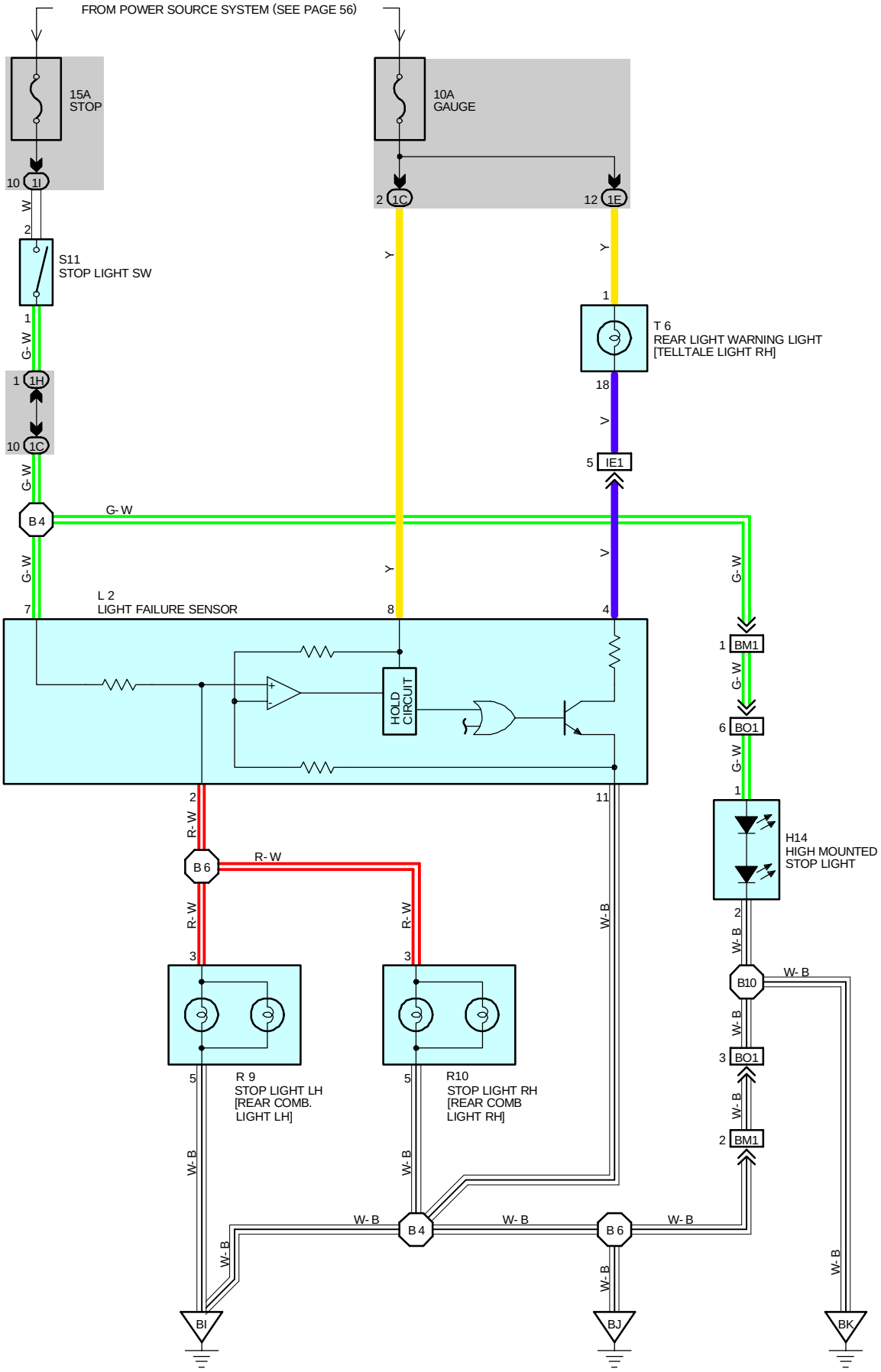
FROM POWER SOURCE SYSTEM (SEE PAGE 56)
15A
STOP
10A
GAUGE
10 1I
2 1C
12 1E
W
2
S11
STOP LIGHT SW
Y
Y
1
T 6
REAR LIGHT WARNING LIGHT
[TELLTALE LIGHT RH]
1
G-W
18
V
1 1H
10 1C
5 IE1
G-W
B 4
G-W
G-W
Y
V
G-W
7
L 2
LIGHT FAILURE SENSOR
8
4
1 BM1
HOLD
CIRCUIT
G-W
6 BO1
G-W
1
2
11
R-W
B 6
R-W
H14
HIGH MOUNTED
STOP LIGHT
R-W
R-W
W-B
2
W-B
W-B
B10
3
3
W-B
3 BO1
5
5
R 9
STOP LIGHT LH
[REAR COMB.
LIGHT LH]
R10
STOP LIGHT RH
[REAR COMB
LIGHT RH]
W-B
W-B
W-B
2 BM1
W-B
W-B
B 4
W-B
B 6
W-B
W-B
W-B
BI
BJ
BK

SYSTEM OUTLINE

CURRENT IS APPLIED AT ALL TIMES THROUGH THE **STOP** FUSE TO **TERMINAL 2** OF THE STOP LIGHT SW.
WHEN THE IGNITION SW IS TURNED ON, CURRENT FLOWS FROM THE **GAUGE** FUSE TO **TERMINAL 8** OF THE LIGHT FAILURE SENSOR, AND ALSO FLOWS THROUGH THE REAR LIGHT WARNING LIGHT TO **TERMINAL 4** OF THE LIGHT FAILURE SENSOR.

STOP LIGHT DISCONNECTION WARNING

WHEN THE IGNITION SW IS TURNED ON AND THE BRAKE PEDAL IS PRESSED (STOP LIGHT SW ON), IF THE STOP LIGHT CIRCUIT IS OPEN, THE CURRENT FLOWING FROM **TERMINAL 7** OF THE LIGHT FAILURE SENSOR TO **TERMINAL 2** CHANGES, SO THE LIGHT FAILURE SENSOR DETECTS THE DISCONNECTION AND THE WARNING CIRCUIT OF THE LIGHT FAILURE SENSOR IS ACTIVATED.
AS A RESULT, THE CURRENT FLOWS FROM **TERMINAL 4** OF THE LIGHT FAILURE SENSOR → **TERMINAL 11** → **GROUND** AND TURNS THE REAR LIGHT WARNING LIGHT ON. BY PRESSING THE BRAKE PEDAL, THE CURRENT FLOWING TO **TERMINAL 8** OF THE LIGHT FAILURE SENSOR KEEPS THE WARNING CIRCUIT ON HOLDING AND THE WARNING LIGHT ON UNTIL THE IGNITION SW IS TURNED OFF.

SERVICE HINTS

S11 STOP LIGHT SW

2-1 :CLOSED WITH THE BRAKE PEDAL DEPRESSED

L 2 LIGHT FAILURE SENSOR

2, 7 GROUND : APPROX. **12** VOLTS WITH THE STOP LIGHT SW ON

4, 8 GROUND : APPROX. **12** VOLTS WITH THE IGNITION SW AT **ON** POSITION
11 GROUND : ALWAYS CONTINUITY

: PARTS LOCATION

CODE	SEE PAGE	CODE	SEE PAGE	CODE	SEE PAGE
H14	30	R 9	30	S11	29
L 2	30	R10	30	T 6	29

: JUNCTION BLOCK AND WIRE HARNESS CONNECTOR

CODE	SEE PAGE	JUNCTION BLOCK AND WIRE HARNESS (CONNECTOR LOCATION)
1C	20	FLOOR NO. 2 WIRE AND J/B NO. 1 (LEFT KICK PANEL)
1E	20	INSTRUMENT PANEL WIRE AND J/B NO. 1 (LEFT KICK PANEL)
1H	20	COWL WIRE AND J/B NO. 1 (LEFT KICK PANEL)
1I		

: CONNECTOR JOINING WIRE HARNESS AND WIRE HARNESS

CODE	SEE PAGE	JOINING WIRE HARNESS AND WIRE HARNESS (CONNECTOR LOCATION)
IE1	36	INSTRUMENT PANEL WIRE AND FLOOR NO. 2 WIRE (LEFT KICK PANEL)
BM1	40	BACK DOOR NO. 1 WIRE AND FLOOR NO. 2 WIRE (LEFT SIDE OF PACKAGE TRAY TRIM)
BO1	40	BACK DOOR NO. 2 WIRE AND BACK DOOR NO. 1 WIRE (BACK DOOR UPPER LEFT)

: GROUND POINTS

CODE	SEE PAGE	GROUND POINTS LOCATION
BI	40	LEFT QUARTER PILLAR
BJ	40	LOWER BACK PANEL CENTER
BK	40	RIGHT SIDE OF HIGH MOUNTED STOP LIGHT

: SPLICE POINTS

CODE	SEE PAGE	WIRE HARNESS WITH SPLICE POINTS	CODE	SEE PAGE	WIRE HARNESS WITH SPLICE POINTS
B 4	40	FLOOR NO. 2 WIRE	B10	40	BACK DOOR NO. 2 WIRE
B 6					

H14

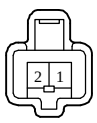

L 2

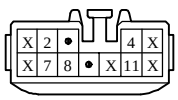

R 9

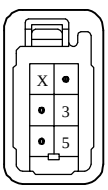

R10

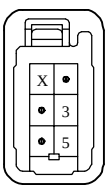

S11 BLUE

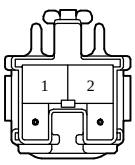

T 6

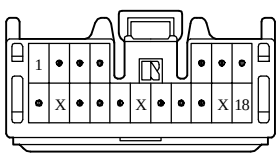

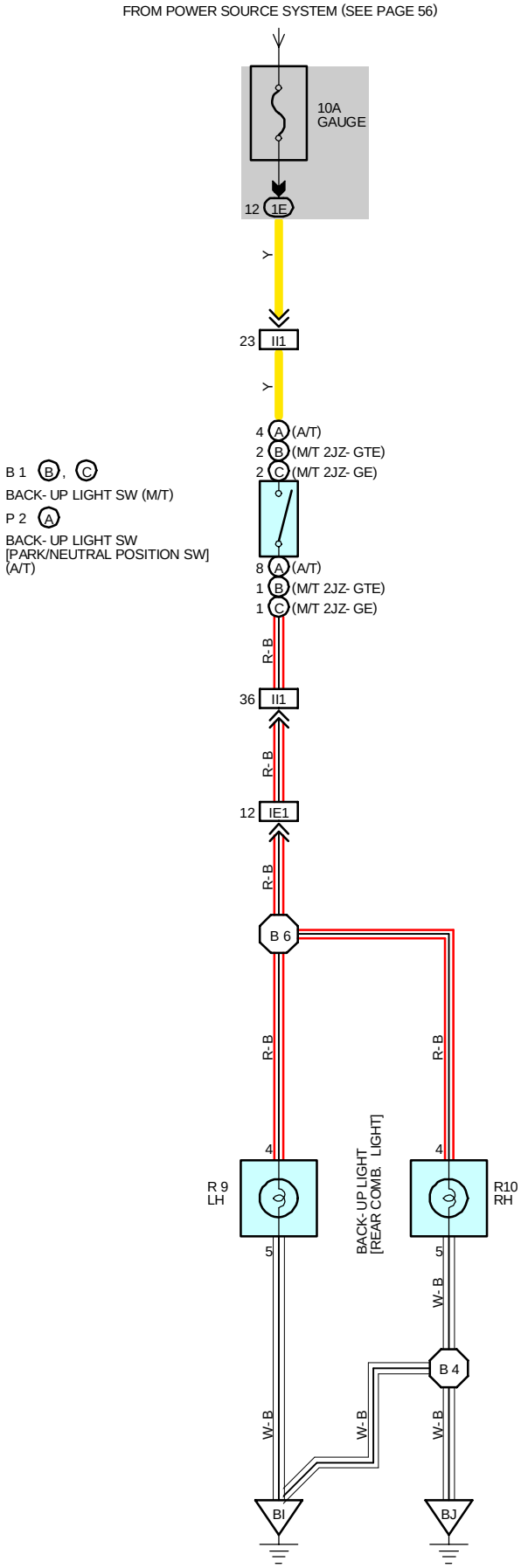
FROM POWER SOURCE SYSTEM (SEE PAGE 56)
10A
GAUGE
12 1E
Y
23 II1
Y
4 A (A/T)
2 B (M/T 2JZ- GTE)
2 C (M/T 2JZ- GE)
B 1 B , C
BACK- UP LIGHT SW (M/T)
P 2 A
BACK- UP LIGHT SW
[PARK/NEUTRAL POSITION SW]
(A/T)
8 A (A/T)
1 B (M/T 2JZ- GTE)
1 C (M/T 2JZ- GE)
R-B
36 II1
R-B
12 IE1
R-B
B 6
R-B
R-B
4
4
R 9
LH
BACK- UP LIGHT
[REAR COMB. LIGHT]
R10
RH
5
5
W-B
B 4
W-B
W-B
W-B
BI
BJ

SERVICE HINTS

B 1 (B**), (**C**) BACK-UP LIGHT SW (M/T)**

P 2 (A**) BACK-UP LIGHT SW [PARK/NEUTRAL POSITION SW] (A/T)**

(B**), (**C**)** 2-1, **(**A**)** 4-8 : CLOSED WITH THE SHIFT LEVER IN **R** POSITION

: PARTS LOCATION

CODE		SEE PAGE	CODE		SEE PAGE	CODE	SEE PAGE
B 1	B	24 (2JZ-GTE)	P 2	A	25 (2JZ-GTE)	R 9	30
	C	26 (2JZ-GE)			27 (2JZ-GE)	R10	30

: JUNCTION BLOCK AND WIRE HARNESS CONNECTOR

CODE	SEE PAGE	JUNCTION BLOCK AND WIRE HARNESS (CONNECTOR LOCATION)
1E	20	INSTRUMENT PANEL WIRE AND J/B NO. 1 (LEFT KICK PANEL)

: CONNECTOR JOINING WIRE HARNESS AND WIRE HARNESS

CODE	SEE PAGE	JOINING WIRE HARNESS AND WIRE HARNESS (CONNECTOR LOCATION)
IE1	36	INSTRUMENT PANEL WIRE AND FLOOR NO. 2 WIRE (LEFT KICK PANEL)
II1	38	ENGINE WIRE AND INSTRUMENT PANEL WIRE (RIGHT KICK PANEL)

: GROUND POINTS

CODE	SEE PAGE	GROUND POINTS LOCATION
BI	40	LEFT QUARTER PILLAR
BJ	40	LOWER BACK PANEL CENTER

: SPLICE POINTS

CODE	SEE PAGE	WIRE HARNESS WITH SPLICE POINTS	CODE	SEE PAGE	WIRE HARNESS WITH SPLICE POINTS
B 4	40	FLOOR NO. 2 WIRE	B 6	40	FLOOR NO. 2 WIRE

B 1 (B) GRAY

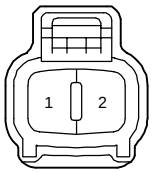

B 1 (C) GRAY

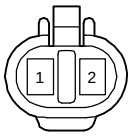

P 2 (A) GRAY

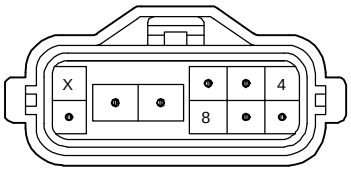

R 9

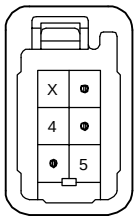

R10

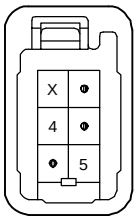

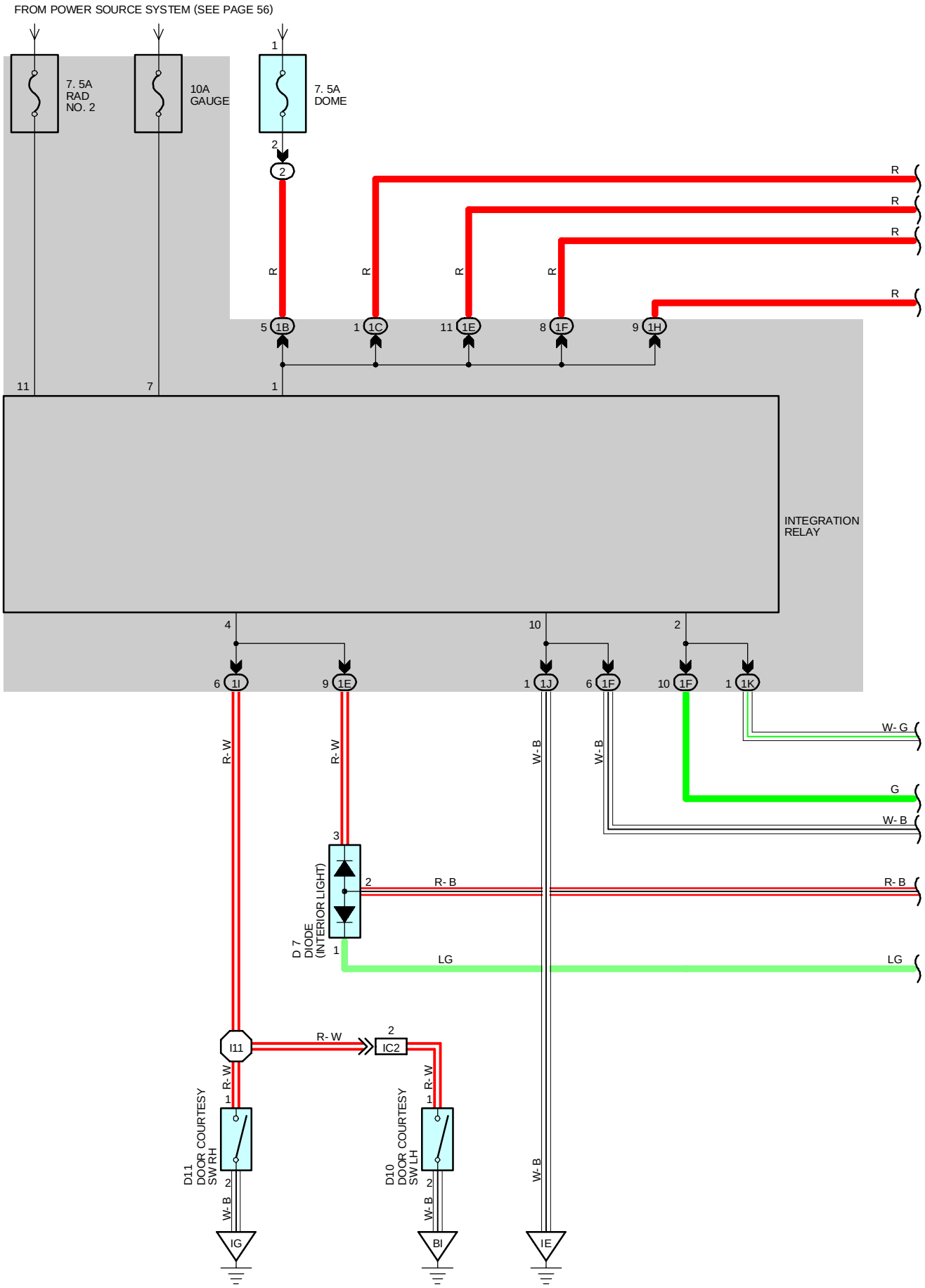
FROM POWER SOURCE SYSTEM (SEE PAGE 56)
7. 5A
RAD
NO. 2
10A
GAUGE
7. 5A
DOME
INTEGRATION
RELAY
D 7
DIODE
(INTERIOR LIGHT)
D11
DOOR COURTESY
SW RH
D10
DOOR COURTESY
SW LH
R
R- W
W- B
R- B
W- G
G
LG
IG
BI
IE
I11
IC2

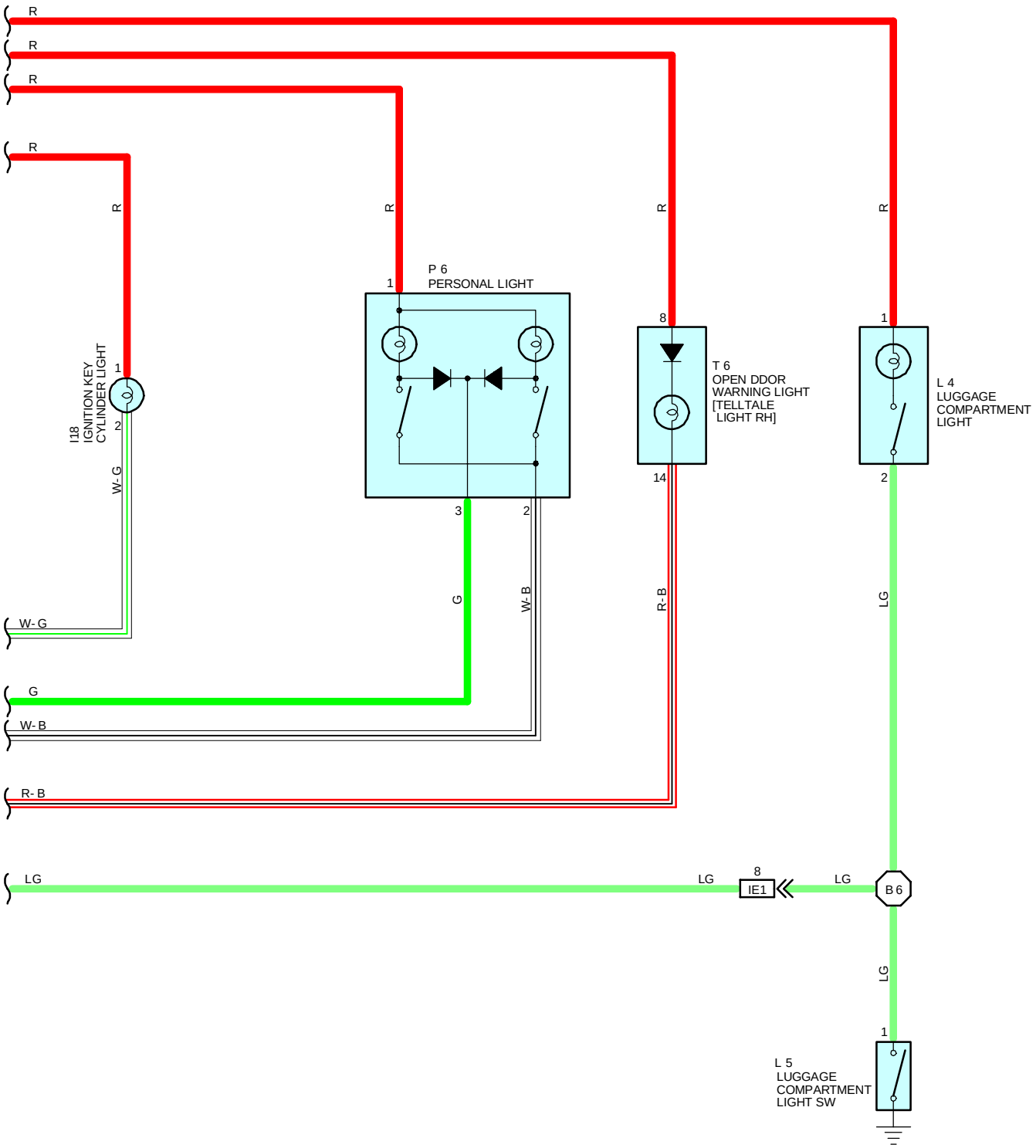
R
R
R
R
R
R
R
R
P 6
PERSONAL LIGHT
1
I18
IGNITION KEY
CYLINDER LIGHT
1
2
W-G
W-G
G
W-B
R-B
3
2
G
W-B
8
14
R-B
T 6
OPEN DDOR
WARNING LIGHT
[TELLTALE
LIGHT RH]
1
2
L 4
LUGGAGE
COMPARTMENT
LIGHT
LG
LG
8
IE1
LG
B 6
LG
1
L 5
LUGGAGE
COMPARTMENT
LIGHT SW

INTERIOR LIGHT

SERVICE HINTS

INTERGRATION RELAY (J/B NO. 1)
1-GROUND : ALWAYS APPROX. **12** VOLTS
4-GROUND : CONTINUITY WITH THE RH DOOR OPEN OR THE LH DOOR OPEN

D10, D11 DOOR COURTESY SW LH, RH
1-2 : CLOSED WITH THE DOOR OPEN

L 5 LUGGAGE COMPARTMENT LIGHT SW
1-GROUND : CLOSED WITH THE LUGGAGE COMPARTMENT DOOR OPEN

: PARTS LOCATION

CODE	SEE PAGE	CODE	SEE PAGE	CODE	SEE PAGE
D 7	28	I18	29	P 6	30
D10	30	L 4	30	T 6	29
D11	30	L 5	30		

: RELAY BLOCKS

CODE	SEE PAGE	RELAY BLOCKS (RELAY BLOCK LOCATION)
2	22	R/B NO. 2 (ENGINE COMPARTMENT LEFT)

: JUNCTION BLOCK AND WIRE HARNESS CONNECTOR

CODE	SEE PAGE	JUNCTION BLOCK AND WIRE HARNESS (CONNECTOR LOCATION)
1B	20	ENGINE ROOM MAIN WIRE AND J/B NO. 1 (LEFT KICK PANEL)
1C	20	FLOOR NO. 2 WIRE AND J/B NO. 1 (LEFT KICK PANEL)
1D	20	FRONT DOOR LH WIRE AND J/B NO. 1 (LEFT KICK PANEL)
1E	20	INSTRUMENT PANEL WIRE AND J/B NO. 1 (LEFT KICK PANEL)
1F	20	ROOF WIRE AND J/B NO. 1 (LEFT KICK PANEL)
1H	20	COWL WIRE AND J/B NO. 1 (LEFT KICK PANEL)
1I		
1J		
1K		

: CONNECTOR JOINING WIRE HARNESS AND WIRE HARNESS

CODE	SEE PAGE	JOINING WIRE HARNESS AND WIRE HARNESS (CONNECTOR LOCATION)
IC2	36	FLOOR NO. 2 WIRE AND COWL WIRE (LEFT KICK PANEL)
IE1	36	INSTRUMENT PANEL WIRE AND J/B NO. 1 (LEFT KICK PANEL)

: GROUND POINTS

CODE	SEE PAGE	GROUND POINTS LOCATION
IE	36	LEFT KICK PANEL
IG	36	RIGHT KICK PANEL
BI	40	LEFT QUARTER PILLAR

: SPLICE POINTS

CODE	SEE PAGE	WIRE HARNESS WITH SPLICE POINTS	CODE	SEE PAGE	WIRE HARNESS WITH SPLICE POINTS
I11	38	COWL WIRE	B 6	40	FLOOR NO. 2 WIRE

D 7

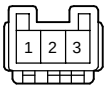

D10

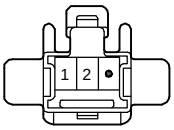

D11

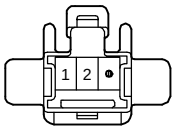

I18 BLUE

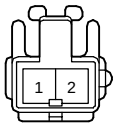

L 4

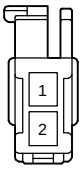

L 5 GRAY



P 6

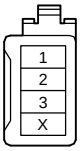

T 6

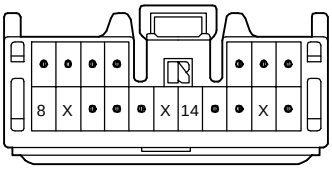

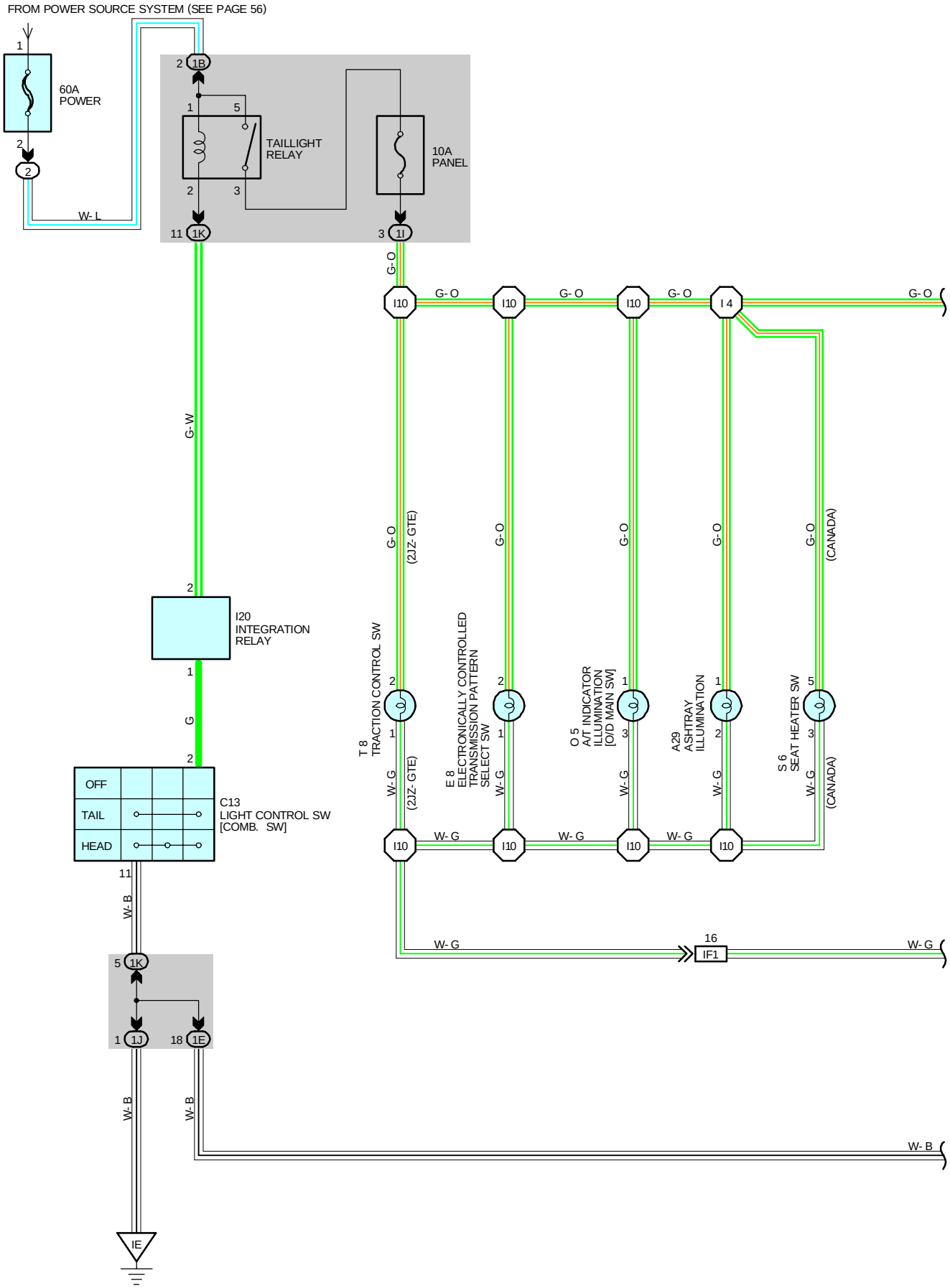
FROM POWER SOURCE SYSTEM (SEE PAGE 56)
60A POWER
TAILLIGHT RELAY
10A PANEL
W- L
G- W
I20 INTEGRATION RELAY
G
C13 LIGHT CONTROL SW [COMB. SW]
OFF
TAIL
HEAD
W- B
IE
G- O
I10
I 4
(2JZ- GTE)
(CANADA)
T 8 TRACTION CONTROL SW
E 8 ELECTRONICALLY CONTROLLED TRANSMISSION PATTERN SELECT SW
O 5 A/T INDICATOR ILLUMINATION [O/D MAIN SW]
A29 ASHTRAY ILLUMINATION
S 6 SEAT HEATER SW
W- G
IF1

*1 : W/ STEREO POWER AMPLIFIER
*2 : W/O STEREO POWER AMPLIFIER

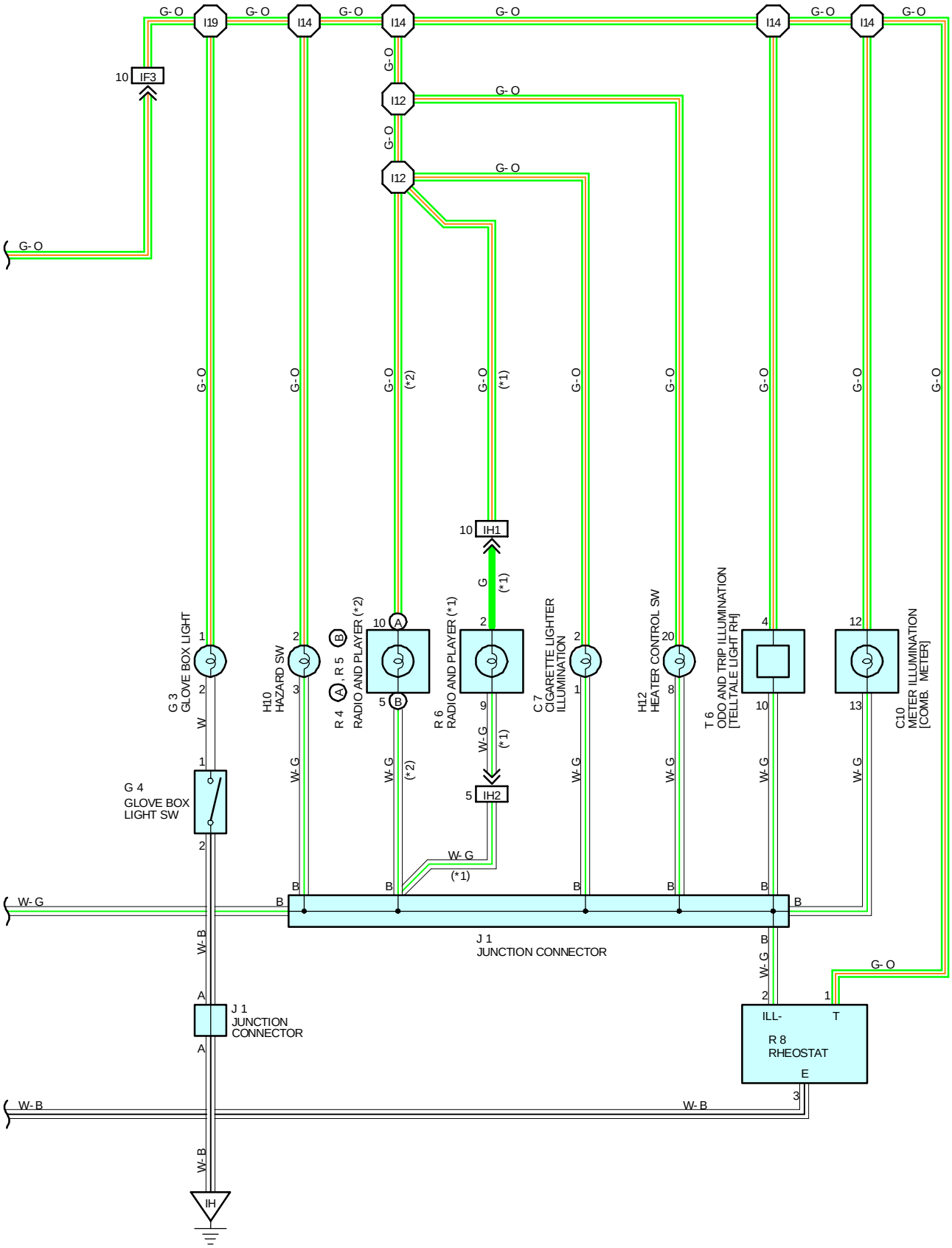

SERVICE HINTS

TAILLIGHT RELAY

5-3 : CLOSED WITH THE LIGHT CONTROL SW AT **TAIL** OR **HEAD** POSITION

C13 LIGHT CONTROL SW [COMB. SW]

2-1 1 : CLOSED WITH THE LIGHT CONTROL SW AT **TAIL** OR **HEAD** POSITION

: PARTS LOCATION

CODE	SEE PAGE	CODE		SEE PAGE	CODE	SEE PAGE
A29	28	H10		29	R 6	29
C 7	28	H12		29	R 8	29
C10	28	I20		29	S 6	29
C13	28	J 1		29	T 6	29
E 8	29	O 5		29	T 8	29
G 3	29	R 4	A	29		
G 4	29	R 5	B	29		

: RELAY BLOCKS

CODE	SEE PAGE	RELAY BLOCKS (RELAY BLOCK LOCATION)
2	22	R/B NO. 2 (ENGINE COMPARTMENT LEFT)

: JUNCTION BLOCK AND WIRE HARNESS CONNECTOR

CODE	SEE PAGE	JUNCTION BLOCK AND WIRE HARNESS (CONNECTOR LOCATION)
1B	20	ENGINE ROOM MAIN WIRE AND J/B NO. 1 (LEFT KICK PANEL)
1E	20	INSTRUMENT PANEL WIRE AND J/B NO. 1 (LEFT KICK PANEL)
1I	20	COWL WIRE AND J/B NO. 1 (LEFT KICK PANEL)
1J		
1K		

: CONNECTOR JOINING WIRE HARNESS AND WIRE HARNESS

CODE	SEE PAGE	JOINING WIRE HARNESS AND WIRE HARNESS (CONNECTOR LOCATION)
IF1	36	INSTRUMENT PANEL WIRE AND COWL WIRE (INSTRUMENT PANEL REINFORCEMENT LH)
IF3	36	INSTRUMENT PANEL WIRE AND COWL WIRE (RIGHT KICK PANEL)
IH1	38	INSTRUMENT PANEL AND CONSOLE BOX WIRE (UNDER THE INSTRUMENT PANEL BRACE RH)
IH2		

: GROUND POINTS

CODE	SEE PAGE	GROUND POINTS LOCATION
IE	36	LEFT KICK PANEL
IH	36	RIGHT KICK PANEL

: SPLICE POINTS

CODE	SEE PAGE	WIRE HARNESS WITH SPLICE POINTS	CODE	SEE PAGE	WIRE HARNESS WITH SPLICE POINTS
I 4	38	COWL WIRE	I14	38	INSTRUMENT PANEL WIRE
I10	38	COWL WIRE	I19		
I12	38	INSTRUMENT PANEL WIRE			

A29

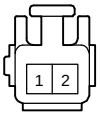

C 7 BLACK

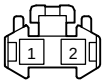

C10 BLUE

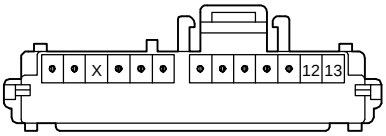

C13 BLACK

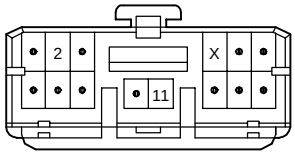

E 8

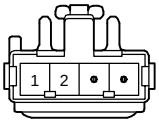

G 3 BLACK

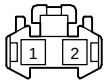

G 4 BLACK



H10

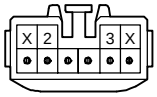

H12 ORANGE

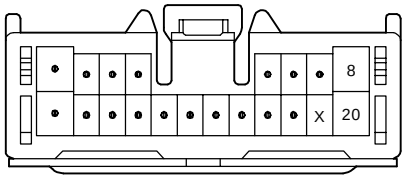

I20

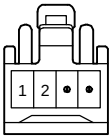

J 1

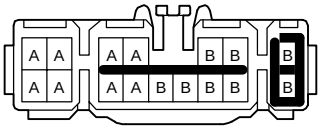

(HINT : SEE PAGE 7)

O 5 BLUE

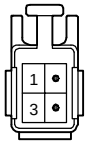

R 4 (A)

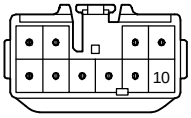

R 5 (B)

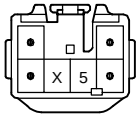

R 6

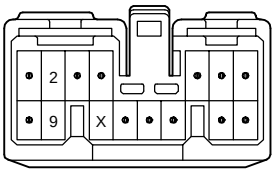

R 8

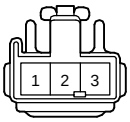

S 6 BLACK

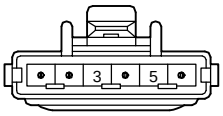

T 6

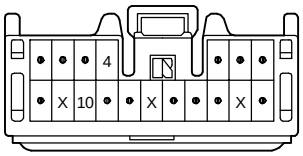

T 8 BLACK

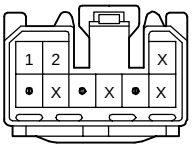

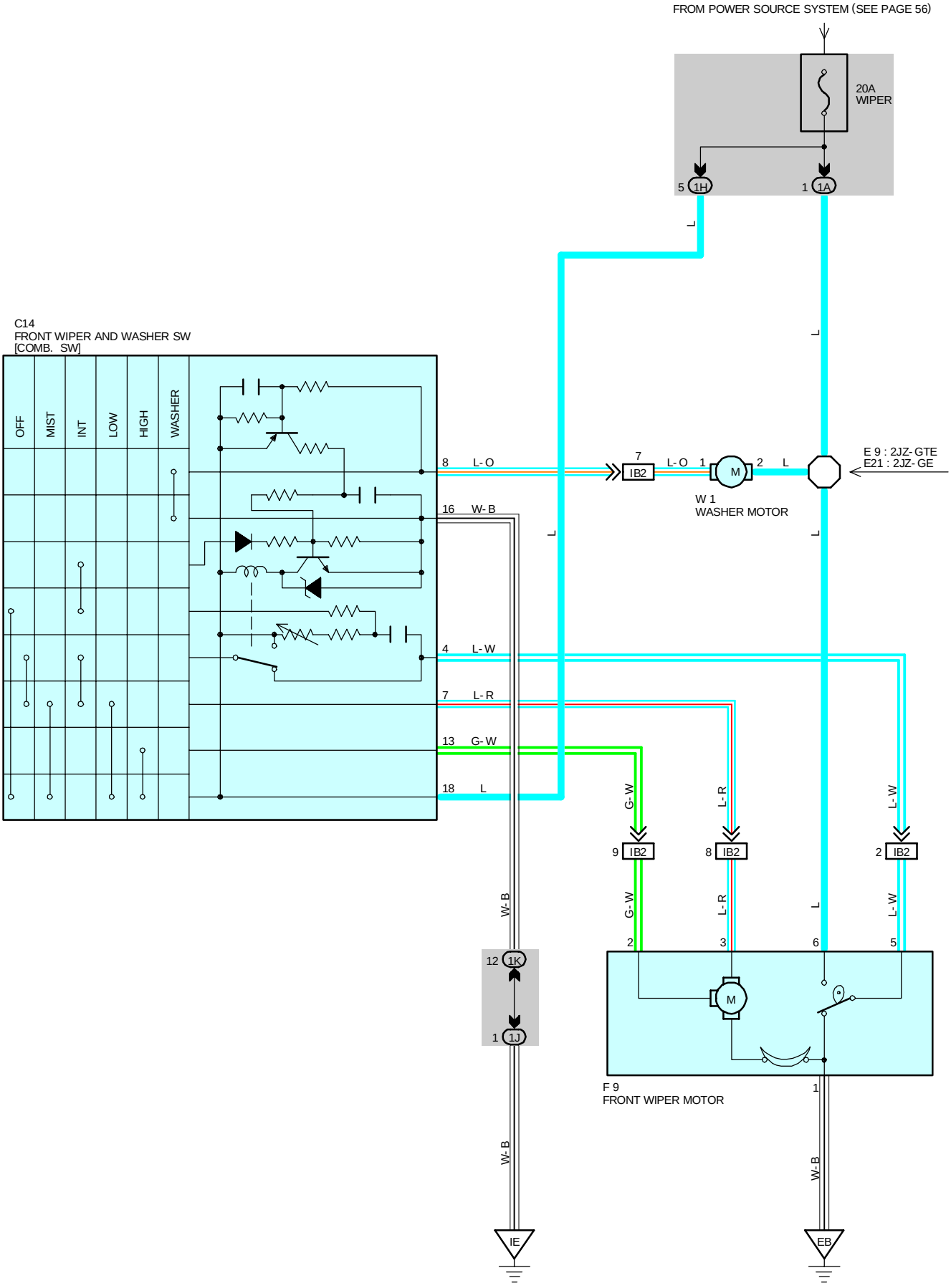
FROM POWER SOURCE SYSTEM (SEE PAGE 56)
20A
WIPER
5 1H
1 1A
L
C14
FRONT WIPER AND WASHER SW
[COMB. SW]
OFF
MIST
INT
LOW
HIGH
WASHER
8 L-O
16 W-B
4 L-W
7 L-R
13 G-W
18 L
7 IB2
L-O 1
M
2 L
W 1
WASHER MOTOR
E 9 : 2JZ-GTE
E21 : 2JZ-GE
G-W
L-R
L-W
9 IB2
8 IB2
2 IB2
W-B
12 1K
1 1J
2
3
6
5
M
F 9
FRONT WIPER MOTOR
1
IE
EB

SYSTEM OUTLINE

WITH THE IGNITION SW TURNED ON, THE CURRENT FLOWS TO **TERMINAL 18** OF THE FRONT WIPER AND WASHER SW, **TERMINAL 2** OF THE WASHER MOTOR AND **TERMINAL 6** OF THE FRONT WIPER MOTOR FROM THE **WIPER** FUSE.

1. LOW SPEED POSITION
WITH THE WIPER SW TURNED TO **LOW** POSITION, THE CURRENT FLOWS FROM **TERMINAL 18** OF THE FRONT WIPER AND WASHER SW TO **TERMINAL 7** → **TERMINAL 3** OF THE FRONT WIPER MOTOR → **TERMINAL 1** → TO **GROUND** AND CAUSES THE WIPER MOTOR TO RUN AT LOW SPEED.

2. HIGH SPEED POSITION
WITH THE WIPER SW TURNED TO **HIGH** POSITION, THE CURRENT FLOWS FROM **TERMINAL 18** OF THE FRONT WIPER AND WASHER SW → **TERMINAL 13** → **TERMINAL 2** OF THE FRONT WIPER MOTOR→ **TERMINAL 1** → TO **GROUND** AND CAUSES TO THE WIPER MOTOR TO RUN AT HIGH SPEED.

3. INT POSITION
WITH THE WIPER SW TURNED TO **INT** POSITION, THE RELAY OPERATES AND THE CURRENT WHICH IS CONNECTED BY RELAY FUNCTION FLOWS FROM THE **TERMINAL 18** OF THE FRONT WIPER AND WASHER SW → **TERMINAL 16**→ TO **GROUND.** THIS FLOWS OF THE CURRENT OPERATES THE INTERMITTENT CIRCUIT AND THE CURRENT FLOWS FROM **TERMINAL 18** OF THE FRONT WIPER AND WASHER SW → **TERMINAL 7** → **TERMINAL 3** OF THE FRONT WIPER MOTOR → **TERMINAL 1** → TO **GROUND** AND FUNCTIONS.
THE INTERMITTENT OPERATION IS CONTROLLED BY A CONDENSER'S CHARGED AND DISCHARGED FUNCTION INSTALLED IN RELAY AND INTERMITTENT TIME IS CONTROLLED BY A TIME CONTROL SW TO CHARGE THE CHARGING TIME OF THE CONDENSER.

4. MIST POSITION
WITH THE WIPER SW TURNED TO **MIST** POSITION, THE CURRENT FLOWS FROM **TERMINAL 18** OF THE FRONT WIPER AND WASHER SW → **TERMINAL 7** → **TERMINAL 3** OF THE FRONT WIPER MOTOR → **TERMINAL 1** → TO **GROUND** AND CAUSES THE WIPER MOTOR TO RUN AT LOW SPEED.

5. WASHER CONTINUOUS OPERATION
WITH THE WASHER SW TURNED TO ON, THE CURRENT FLOWS THROUGH **TERMINAL 2** OF THE WASHER MOTOR → **TERMINAL 1**→ **TERMINAL 8** OF THE FRONT WIPER AND WASHER SW → **TERMINAL 16** → TO **GROUND** AND CAUSES TO THE WASHER MOTOR TO RUN, AND WINDOW WASHER IS JET. THIS CAUSES THE CURRENT TO FLOW WASHER CONTINUOUS OPERATION CIRCUIT IN **TERMINAL 18** OF THE FRONT WIPER AND WASHER SW → **TERMINAL 7** → **TERMINAL 3** OF THE FRONT WIPER MOTOR→ **TERMINAL 1** → TO **GROUND** AND FUNCTION.

SERVICE HINTS

C14 FRONT WIPER AND WASHER SW [COMB. SW]

16-GROUND : ALWAYS CONTINUITY
18-GROUND : APPROX. **12** VOLTS WITH THE IGNITION SW AT **ON** POSITION
7-GROUND : APPROX. **12** VOLTS WITH THE WIPER AND WASHER SW AT **LOW** POSITION
: APPROX. **12** VOLTS EVERY APPROX. **1** TO **10** SECONDS INTERMITTENTLY WITH THE WIPER SW AT **INT** POSITION
4-GROUND : APPROX. **12** VOLTS WITH THE IGNITION SW ON UNLESS THE WIPER MOTOR AT **STOP** POSITION
13-GROUND : APPROX. **12** VOLTS WITH THE IGNITION SW ON AND THE WIPER AND WASHER SW AT **HIGH** POSITION

F 9 FRONT WIPER MOTOR

5-6 : CLOSED UNLESS WIPER MOTOR AT **STOP** POSITION

○ : PARTS LOCATION

CODE	SEE PAGE	CODE	SEE PAGE	CODE	SEE PAGE
C14	28	F 9	26 (2JZ-GE)	W 2	27 (2JZ-GTE)
F 9	24 (2JZ-GTE)	W 1	25 (2JZ-GTE)		

⬭ : JUNCTION BLOCK AND WIRE HARNESS CONNECTOR

CODE	SEE PAGE	JUNCTION BLOCK AND WIRE HARNESS (CONNECTOR LOCATION)
1A	20	ENGINE ROOM MAIN WIRE AND J/B NO. 1 (LEFT KICK PANEL)
1H	20	COWL WIRE AND J/B NO. 1 (LEFT KICK PANEL)
1J		
1K		

▭ : CONNECTOR JOINING WIRE HARNESS AND WIRE HARNESS

CODE	SEE PAGE	JOINING WIRE HARNESS AND WIRE HARNESS (CONNECTOR LOCATION)
IB2	36	ENGINE ROOM MAIN WIRE AND COWL WIRE (LEFT KICK PANEL)

: GROUND POINTS

CODE	SEE PAGE	GROUND POINTS LOCATION
EB	32 (2JZ-GTE)	FRONT SIDE OF LEFT FENDER
	34 (2JZ-GE)	
IE	36	LEFT KICK PANEL

: SPLICE POINTS

CODE	SEE PAGE	WIRE HARNESS WITH SPLICE POINTS	CODE	SEE PAGE	WIRE HARNESS WITH SPLICE POINTS
E 9	32	ENGINE ROOM MAIN WIRE	E21	34	ENGINE ROOM MAIN WIRE

C14 BLACK

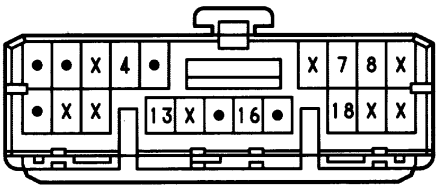

F 9 BLACK

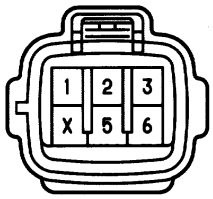

W 1 BLACK

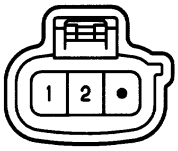

FROM POWER SOURCE SYSTEM (SEE PAGE 56)

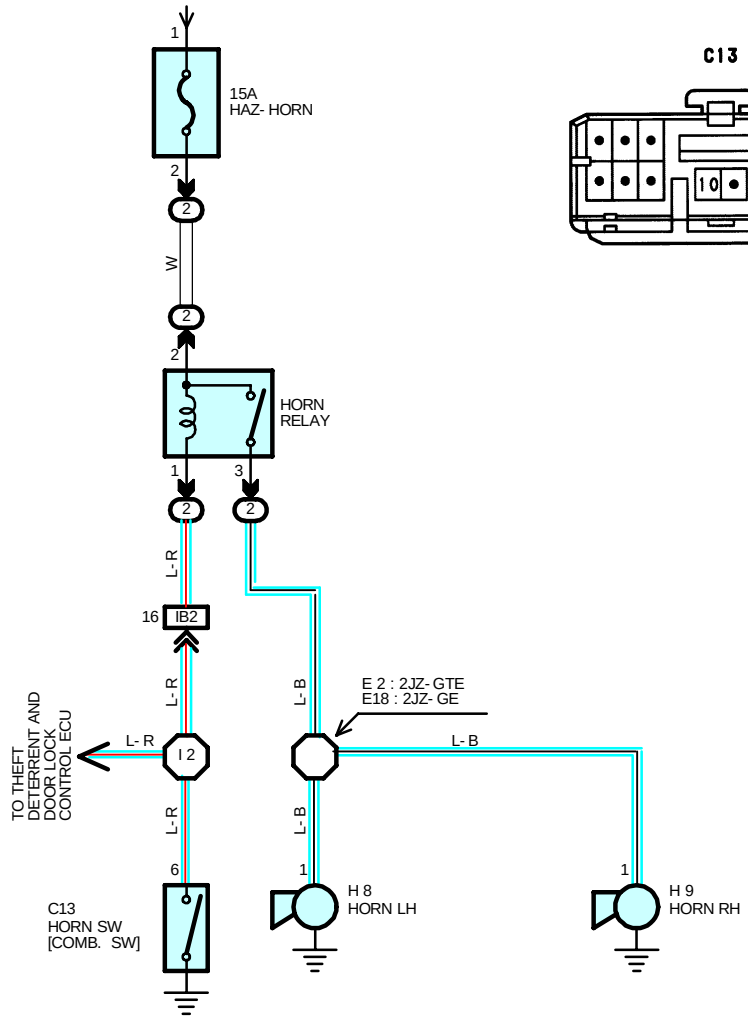

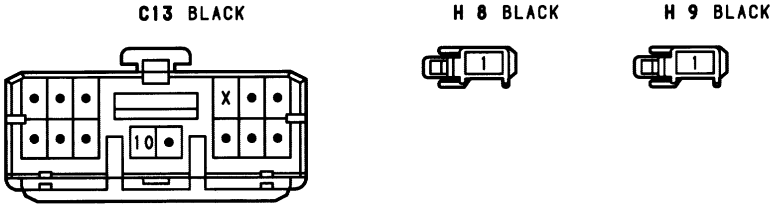

SERVICE HINTS

HORN RELAY

(2) 2- **(2)** 3 : CLOSED WITH THE HORN SW ON

: PARTS LOCATION

CODE	SEE PAGE	CODE	SEE PAGE	CODE	SEE PAGE
C13	28	H 8	27 (2JZ-GE)	H 9	27 (2JZ-GE)
H 8	24 (2JZ-GTE)	H 9	24 (2JZ-GTE)		

: RELAY BLOCKS

CODE	SEE PAGE	RELAY BLOCKS (RELAY BLOCK LOCATION)
2	22	R/B NO. 2 (ENGINE COMPARTMENT LEFT)

: CONNECTOR JOINING WIRE HARNESS AND WIRE HARNESS

CODE	SEE PAGE	JOINING WIRE HARNESS AND WIRE HARNESS (CONNECTOR LOCATION)
IB2	36	ENGINE ROOM MAIN WIRE AND COWL WIRE (LEFT KICK PANEL)

: SPLICE POINTS

CODE	SEE PAGE	WIRE HARNESS WITH SPLICE POINTS	CODE	SEE PAGE	WIRE HARNESS WITH SPLICE POINTS
E 2	32	ENGINE ROOM MAIN WIRE	I 2	38	COWL WIRE
E18	34				

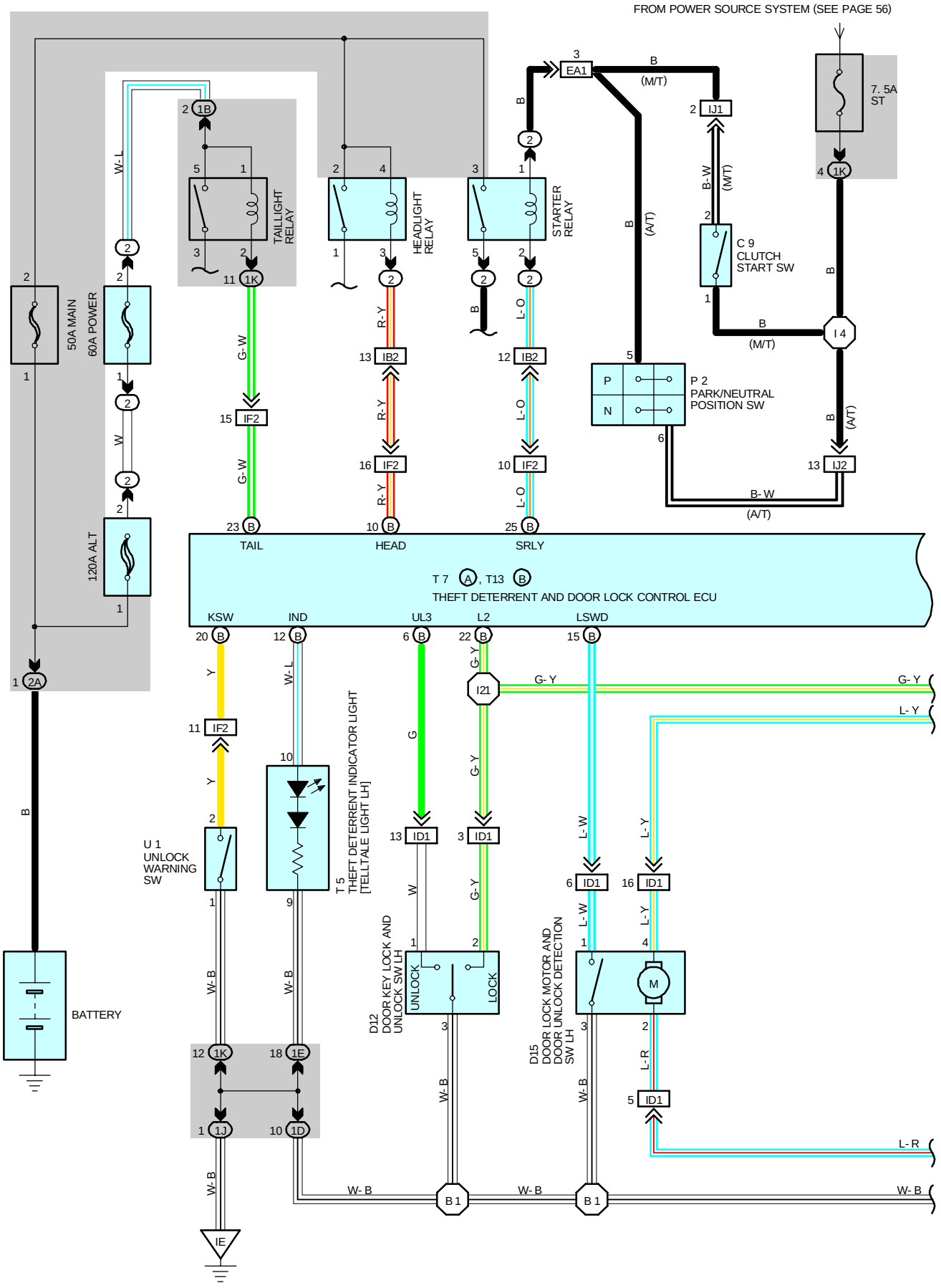
FROM POWER SOURCE SYSTEM (SEE PAGE 56)
50A MAIN
60A POWER
120A ALT
BATTERY
TAILLIGHT RELAY
HEADLIGHT RELAY
STARTER RELAY
C 9
CLUTCH START SW
P 2
PARK/NEUTRAL POSITION SW
7. 5A
ST
TAIL
HEAD
SRLY
T 7 A, T13 B
THEFT DETERRENT AND DOOR LOCK CONTROL ECU
KSW
IND
UL3
L2
LSWD
U 1
UNLOCK WARNING SW
T 5
THEFT DETERRENT INDICATOR LIGHT [TELLTALE LIGHT LH]
D12
DOOR KEY LOCK AND UNLOCK SW LH
UNLOCK
LOCK
D15
DOOR LOCK MOTOR AND DOOR UNLOCK DETECTION SW LH
M
B 1
IE

*1 : 2JZ- GE
*2 : 2JZ- GTE
*3 : EXCEPT 2JZ- GE M/T

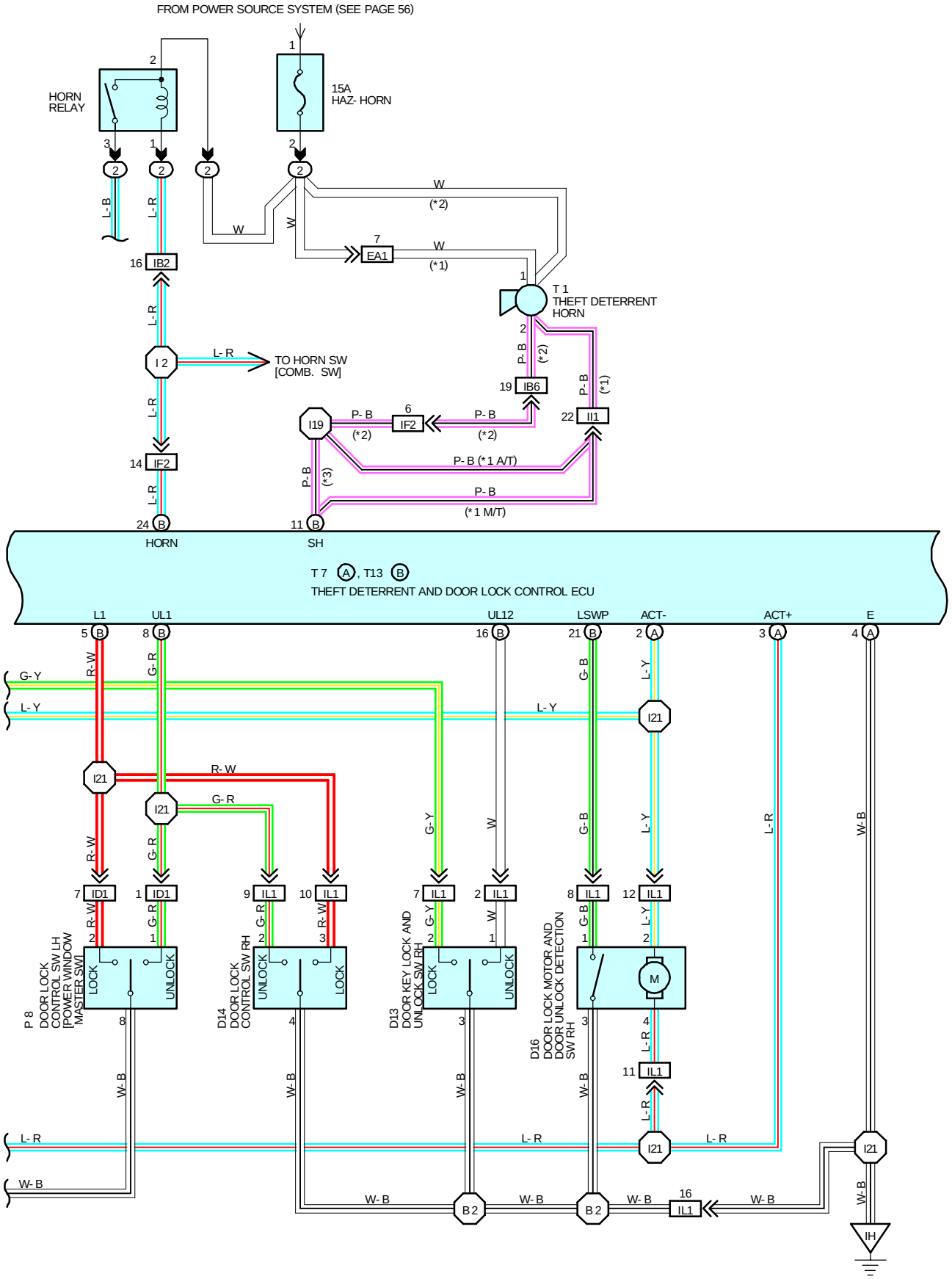

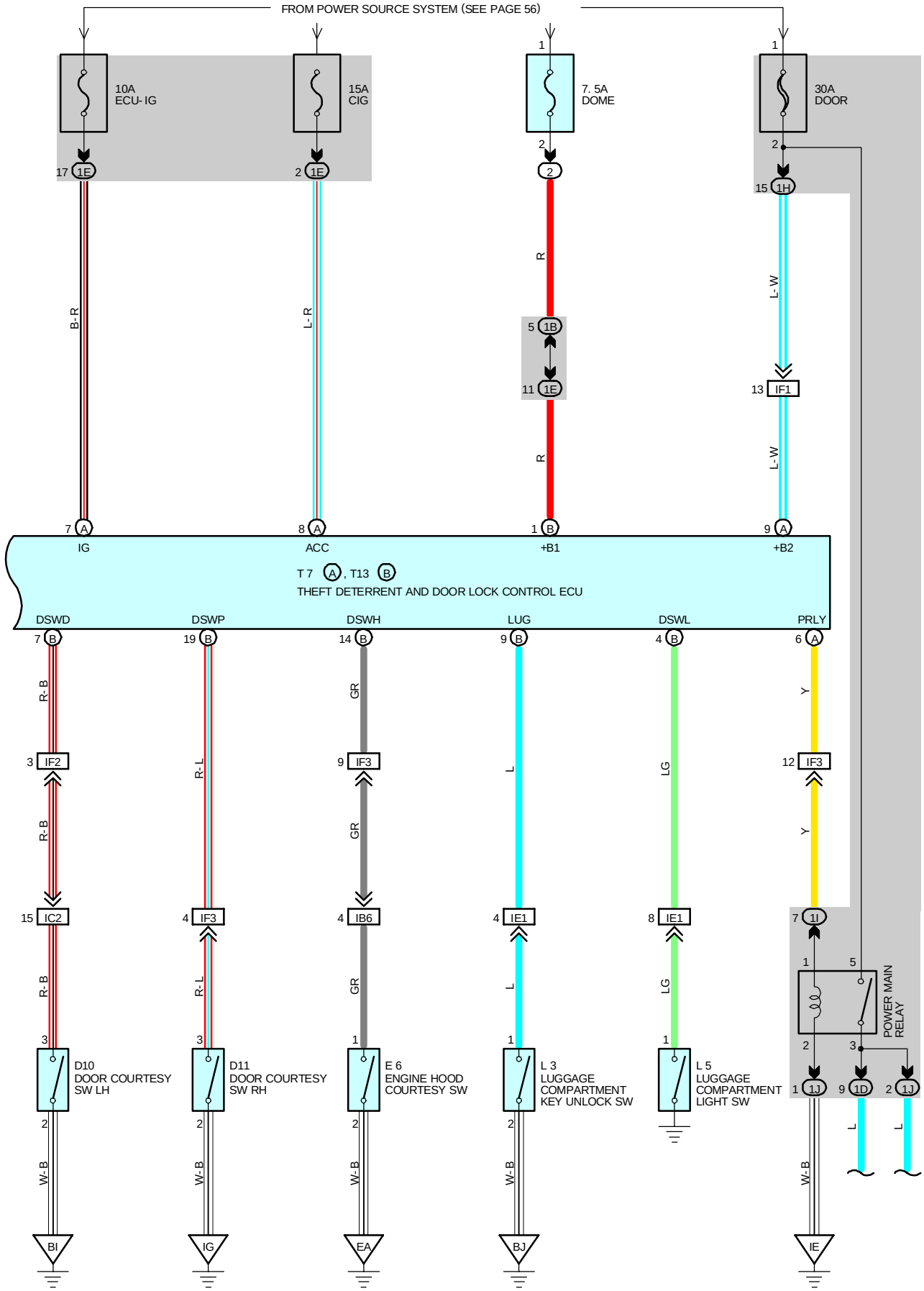
FROM POWER SOURCE SYSTEM (SEE PAGE 56)
10A
ECU- IG
15A
CIG
7. 5A
DOME
30A
DOOR
17 1E
2 1E
1
2
2
1
2
15 1H
B-R
L-R
R
L-W
5 1B
11 1E
13 IF1
R
L-W
7 A
8 A
1 B
9 A
IG
ACC
+B1
+B2
T 7 A , T13 B
THEFT DETERRENT AND DOOR LOCK CONTROL ECU
DSWD
DSWP
DSWH
LUG
DSWL
PRLY
7 B
19 B
14 B
9 B
4 B
6 A
R-B
R-L
GR
L
LG
Y
3 IF2
9 IF3
12 IF3
R-B
GR
Y
15 IC2
4 IF3
4 IB6
4 IE1
8 IE1
7 1I
R-B
R-L
GR
L
LG
1
5
POWER MAIN RELAY
3
3
1
3
1
1
2
3
D10
DOOR COURTESY SW LH
D11
DOOR COURTESY SW RH
E 6
ENGINE HOOD COURTESY SW
L 3
LUGGAGE COMPARTMENT KEY UNLOCK SW
L 5
LUGGAGE COMPARTMENT LIGHT SW
1 1J
9 1D
2 1J
2
2
2
2
2
W-B
W-B
W-B
W-B
W-B
L
L
BI
IG
EA
BJ
IE

SYSTEM OUTLINE

CURRENT ALWAYS FLOWS TO **TERMINAL (A) 9** OF THE THEFT DETERRENT AND DOOR LOCK CONTROL ECU THROUGH THE **DOOR** FUSE, AND TO **TERMINAL (B) 1** THROUGH THE **DOME** FUSE.
WHEN THE IGNITION SW TURNED ON, THE CURRENT FLOWING THROUGH THE **ECU-IG** FUSE " **TERMINAL (A) 7** OF THE ECU " **TERMINAL (A) 6** FLOWS THROUGH THE COIL SIDE OF THE POWER MAIN RELAY TO **GROUND,** CAUSING THE RELAY TO OPERATE. THE CURRENT FLOWING THROUGH THE **DOOR** FUSE FLOWS TO THE DOOR LOCK CONTROL SWITCHES, CAUSING THE INDICATOR LIGHT TO LIGHT UP.

1. MANUAL LOCK OPERATION
WHEN THE DOOR LOCK CONTROL SW OR KEY SW ARE PUSHED TO **LOCK** POSITION, A LOCK SIGNAL IS INPUT TO **TERMINAL (B) 5, (B) 22** (FOR KEY SW) OF THE THEFT DETERRENT AND DOOR LOCK CONTROL ECU AND CAUSES THE ECU TO FUNCTION. CURRENT FLOWS FROM **TERMINAL (A) 9** OF THE ECU " **TERMINAL (A) 3** " **TERMINAL 2** (LH), **TERMINAL 4** (RH) OF THE DOOR LOCK MOTORS " **TERMINAL 4** (LH), **TERMINAL 2** (RH) " **TERMINAL (A) 2** OF THE ECU " **TERMINAL (A) 4** " **GROUND** AND THE DOOR LOCK MOTOR CAUSES THE DOOR TO LOCK.

2. MANUAL LOCK OPERATION
WHEN THE DOOR LOCK CONTROL SW OR KEY SW ARE PUSHED TO UNLOCK POSITION, AN UNLOCK SIGNAL IS INPUT TO **TERMINAL (B) 8, (B) 6** (FOR KEY SW LH) OR **(B) 16** (FOR KEY SW RH) OF THE THEFT DETERRENT AND DOOR LOCK CONTROL ECU AND CAUSES TO FUNCTION.
CURRENT FLOWS FROM **TERMINAL (A) 9** OF THE ECU " **TERMINAL (A) 2** " **TERMINAL 4** (LH), **TERMINAL 2** (RH) OF THE DOOR LOCK MOTORS " **TERMINAL 2** (LH), **TERMINAL 4** (RH) " **TERMINAL (A) 3** OF THE ECU " **TERMINAL (A) 4** " **GROUND** AND THE DOOR LOCK MOTOR CAUSES THE DOOR TO UNLOCK.
WHEN UNLOCK OPERATION OCCURS USING THE LH DOOR KEY SW, DOING THE UNLOCK OPERATION ONCE UNLOCKS ONLY THE DRIVER'S DOOR. TO UNLOCK ALL OTHER DOORS TOGETHER, UNLOCK OPERATION MUST BE DONE AGAIN WITHIN **3** SECONDS OF THE FIRST OPERATION.

3. IGNITION KEY REMINDER OPERATION
- OPERATION OF DOOR LOCK BUTTON (OPERATION OF DOOR LOCK MOTORS)
  WHEN THE IGNITION KEY IS IN THE CYLINDER (UNLOCK WARNING SW ON) AND THE DOOR IS OPENED AND LOCKED USING DOOR LOCK BUTTON (DOOR LOCK MOTOR). THE DOOR IS LOCKED ONCE BUT EACH DOOR IS UNLOCKED SOON BY THE OPERATION OF THE ECU. AS A RESULT OF ECU ACTIVATION, THE CURRENT FLOWS FROM **TERMINAL (A) 9** OF THE ECU " **TERMINAL (A) 2** " **TERMINAL 4** (LH),**TERMINAL 2** (RH)OF THE DOOR LOCK MOTORS " **TERMINAL 2** (LH), **TERMINAL 4** (RH) " **TERMINAL (A) 3** OF THE ECU " **TERMINAL (A) 4** " **GROUND** AND CAUSES ALL THE DOOR LOCK CONTROL SW AND DOOR LOCK KEY SW.
- KEY LESS LOCK OPERATION
  WHEN THE IGNITION KEY IS STILL INSERTED IN THE CYLINDER (UNLOCK WARNING SW ON), THE DOOR IS OPEN AND UNLOCK OPERATION IS PREVENTED BY KEEPING THE DOOR LOCK BUTTON PRESSED TO THE LOCK SIDE, THE DOOR IS KEPT IN THE LOCK CONDITION. IF THE DOOR IS THEN CLOSED, A SIGNAL IS INPUT TO THE ECU FROM THE DOOR COURTESY SW. THIS ACTIVATES THE ECU AND EACH DOOR IS UNLOCKED.

SERVICE HINTS

D10, D11 DOOR COURTESY SW LH, RH

3-2 : CLOSED WITH THE DOOR OPEN

D12, D13 DOOR KEY LOCK AND UNLOCK SW LH, RH

1-3 : CLOSED WITH THE DOOR LOCK CYLINDER UNLOCKED WITH KEY

2-3 : CLOSED WITH THE DOOR LOCK CYLINDER LOCKED WITH KEY

D15, D16 DOOR LOCK MOTOR AND DOOR UNLOCK DETECTION SW LH, RH

1-3 : CLOSED WITH **UNLOCK** POSITION.

E 6 ENGINE HOOD COURTESY SW

1-2 : CLOSED WITH THE ENGINE HOOD OPEN

U 1 UNLOCK WARNING SW

2-1 : CLOSED WITH THE IGNITION KEY IN CYLINDER

L 3 LUGGAGE COMPARTMENT KEY UNLOCK SW

2-1 : CLOSED WITH THE DOOR LOCK CYLINDER UNLOCKED WITH KEY

L 5 LUGGAGE COMPARTMENT LIGHT SW

1-GROUND : CLOSED WITH THE DOOR OPEN

T 7 (A), T13 (B) THEFT DETERRENT AND DOOR LOCK CONTROL ECU

(B) 9-GROUND : CONTINUITY WITH THE LUGGAGE COMPARTMENT DOOR TO **UNLOCK** POSITION

(B) 14-GROUND : CONTINUITY WITH THE ENGINE HOOD OPEN

(B) 4-GROUND : CONTINUITY WITH THE LUGGAGE COMPARTMENT DOOR OPEN

(B) 8-GROUND : CONTINUITY WITH THE DOOR LOCK CONTROL SW TO **UNLOCK** POSITION

(B) 5-GROUND : CONTINUITY WITH THE DOOR LOCK CONTROL SW TO **LOCK** POSITION

(B) 25-GROUND : APPROX. **12** VOLTS WITH THE SHIFT LEVER IN **N** OR **P** POSITION AND THE IGNITION SW AT **ST** POSITION (A/T)

: APPROX. **12** VOLTS WITH THE CLUTCH PEDAL FULLY DEPRESSED (M/T)

(A) 7-GROUND : APPROX. **12** VOLTS WITH THE IGNITION SW AT **ON** POSITION

(B) 20-GROUND : CONTINUITY WITH THE IGNITION KEY IN CYLINDER

(B) 15-GROUND : CONTINUITY WITH THE LH DOOR TO **UNLOCK** POSITION

(B) 21-GROUND : CONTINUITY WITH THE RH DOOR TO **UNLOCK** POSITION

(B) 6-GROUND : CONTINUITY WITH THE DOOR KEY LOCK AND UNLOCK SW LH TO **UNLOCK** POSITION

(B) 16-GROUND : CONTINUITY WITH THE DOOR KEY LOCK AND UNLOCK SW RH TO **UNLOCK** POSITION

(B) 22-GROUND : CONTINUITY WITH THE DOOR KEY LOCK AND UNLOCK SW TO **LOCK** POSITION

(A) 4-GROUND : ALWAYS CONTINUITY

(B) 1-GROUND : ALWAYS APPROX. **12** VOLTS

: PARTS LOCATION

CODE	SEE PAGE	CODE	SEE PAGE	CODE	SEE PAGE
C 9	28	D16	30	P 8	30
D10	30	E 6	24 (2JZ-GTE)	T 1	25 (2JZ-GTE)
D11	30		26 (2JZ-GE)		27 (2JZ-GE)
D12	30	L 3	30	T 5	29
D13	30	L 5	30	T 7 A	29
D14	30	P 2	25 (2JZ-GTE)	T13 B	29
D15	30		27 (2JZ-GE)	U 1	29

: RELAY BLOCKS

CODE	SEE PAGE	RELAY BLOCKS (RELAY BLOCK LOCATION)
2	22	R/B NO. 2 (ENGINE COMPARTMENT LEFT)

: JUNCTION BLOCK AND WIRE HARNESS CONNECTOR

CODE	SEE PAGE	JUNCTION BLOCK AND WIRE HARNESS (CONNECTOR LOCATION)
1B	20	ENGINE ROOM MAIN WIRE AND J/B NO. 1 (LEFT KICK PANEL)
1D	20	FRONT DOOR LH WIRE AND J/B NO. 1 (LEFT KICK PANEL)
1E	20	INSTRUMENT PANEL WIRE AND J/B NO. 1 (LEFT KICK PANEL)
1H	20	COWL WIRE AND J/B NO. 1 (LEFT KICK PANEL)
1I		
1J		
1K		
2A	22	BATTERY AND J/B NO.2 (ENGINE COMPARTMENT LEFT)

: CONNECTOR JOINING WIRE HARNESS AND WIRE HARNESS

CODE	SEE PAGE	JOINING WIRE HARNESS AND WIRE HARNESS (CONNECTOR LOCATION)
EA1	32 (2JZ-GTE) 34 (2JZ-GE)	ENGINE WIRE AND ENGINE ROOM MAIN WIRE (NEAR THE R/B NO. 2)
IB2	36	ENGINE ROOM MAIN WIRE AND COWL WIRE (LEFT KICK PANEL)
IB6	36	ENGINE ROOM MAIN WIRE AND COWL WIRE (RIGHT KICK PANEL)
IC2	36	FLOOR NO. 2 WIRE AND COWL WIRE (LEFT KICK PANEL)
ID1	36	FRONT DOOR LH WIRE AND INSTRUMENT PANEL WIRE (LEFT KICK PANEL)
IE1	36	INSTRUMENT PANEL WIRE AND FLOOR NO. 2 WIRE (LEFT KICK PANEL)
IF1 IF2	36	INSTRUMENT PANEL WIRE AND COWL WIRE (INSTRUMENT PANEL REINFORCEMENT LH)
IF3	36	INSTRUMENT PANEL WIRE AND COWL WIRE (RIGHT KICK PANEL)
II1	38	ENGINE WIRE AND INSTRUMENT PANEL WIRE (RIGHT KICK PANEL)
IJ1 IJ2	38	ENGINE WIRE AND COWL WIRE (RIGHT KICK PANEL)
IL1	38	FRONT DOOR RH WIRE AND INSTRUMENT PANEL WIRE (RIGHT KICK PANEL)

: GROUND POINTS

CODE	SEE PAGE	GROUND POINTS LOCATION
EA	32 (2JZ-GTE) 34 (2JZ-GE)	FRONT SIDE OF RIGHT FENDER
IE	36	LEFT KICK PANEL
IG IH	36	RIGHT KICK PANEL
BI	40	LEFT QUARTER PILLAR
BJ	40	LOWER BACK PANEL CENTER

: SPLICE POINTS

CODE	SEE PAGE	WIRE HARNESS WITH SPLICE POINTS	CODE	SEE PAGE	WIRE HARNESS WITH SPLICE POINTS
I 2	38	COWL WIRE	I21	38	INSTRUMENT PANEL WIRE
I 4			B 1	40	FRONT DOOR LH WIRE
I19	38	INSTRUMENT PANEL WIRE	B 2	40	FRONT DOOR RH WIRE

C 9

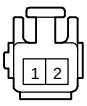

D10

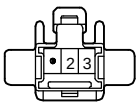

D11

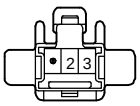

D12



D13



D14

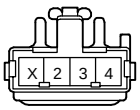

D15 GRAY



D16 GRAY



E 6 BLACK



L 3



L 5 GRAY



P 2 GRAY

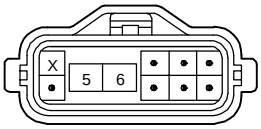

P 8

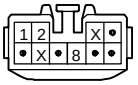

T 1 BLACK



(2JZ-GTE) T 5

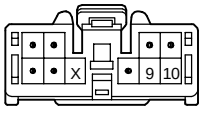

(2JZ-GE) T 5

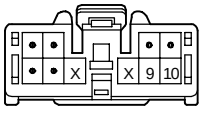

T 7 Ⓐ ORANGE

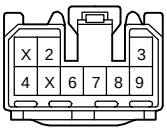

T13 Ⓑ ORANGE

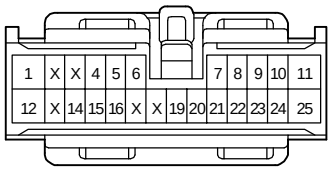

U 1 BLACK

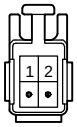

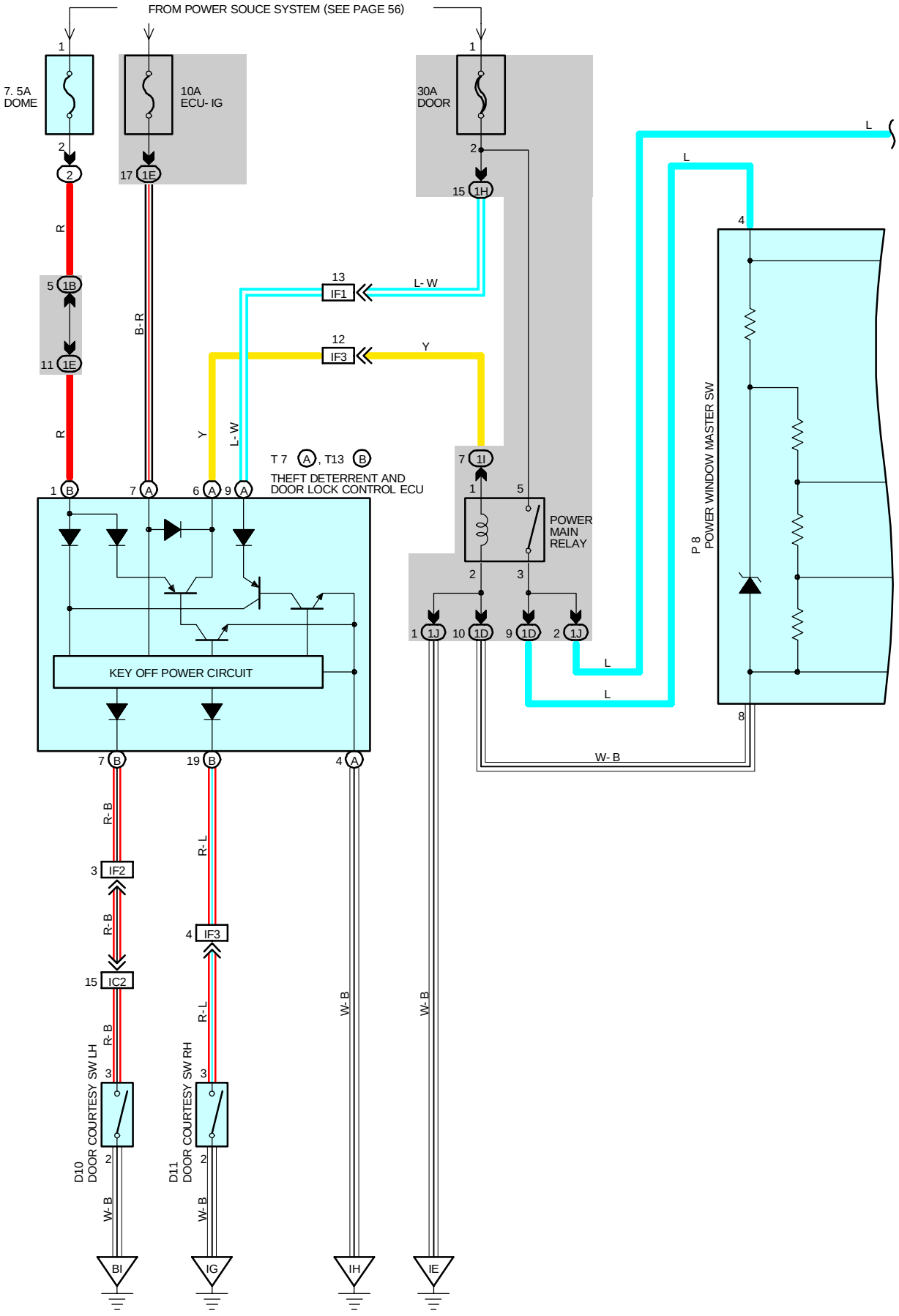
FROM POWER SOUCE SYSTEM (SEE PAGE 56)
7. 5A
DOME
10A
ECU- IG
30A
DOOR
T 7 A, T13 B
THEFT DETERRENT AND
DOOR LOCK CONTROL ECU
KEY OFF POWER CIRCUIT
POWER
MAIN
RELAY
P 8
POWER WINDOW MASTER SW
D10
DOOR COURTESY SW LH
D11
DOOR COURTESY SW RH
IF1
IF2
IF3
IC2
L- W
Y
R
B-R
R- B
R- L
W- B
L
BI
IG
IH
IE

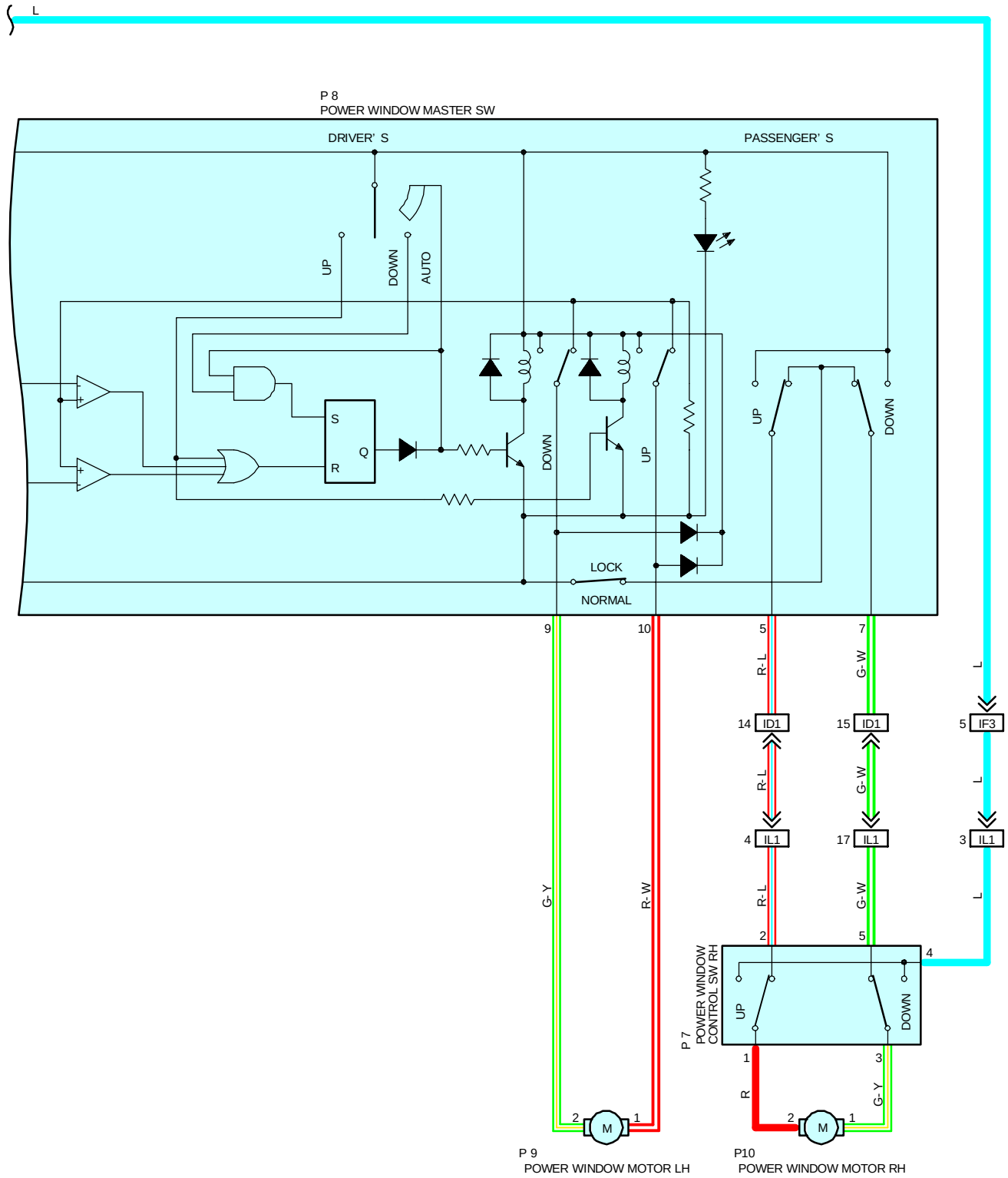
L
P 8
POWER WINDOW MASTER SW
DRIVER' S
PASSENGER' S
UP
DOWN
AUTO
S
Q
R
DOWN
UP
UP
DOWN
LOCK
NORMAL
9
10
5
7
R-L
G-W
L
14 ID1
15 ID1
5 IF3
R-L
G-W
L
4 IL1
17 IL1
3 IL1
R-L
G-W
L
G-Y
R-W
2
5
4
POWER WINDOW CONTROL SW RH
P 7
UP
DOWN
1
3
R
G-Y
2 M 1
2 M 1
P 9
POWER WINDOW MOTOR LH
P10
POWER WINDOW MOTOR RH

SYSTEM OUTLINE

WITH THE IGNITION SW TURNED ON, THE CURRENT FLOWS THROUGH THE **ECU-IG** FUSE TO → **TERMINAL (A)7** OF THE THEFT DETERRENT AND DOOR LOCK CONTROL ECU → **TERMINAL (A)6** → **TERMINAL 1** OF THE POWER MAIN RELAY → **TERMINAL 2** → **GROUND,** THIS ACTIVATES THE RELAY AND THE CURRENT FLOWING TO **TERMINAL 5** OF THE RELAY FROM DOOR FUSE FLOWS TO **TERMINAL 3** OF THE RELAY →**TERMINAL 4** OF THE POWER WINDOW MASTER SW AND → **TERMINAL 4** OF THE POWER WINDOW CONTROL SW RH.

1. MANUAL OPERATION (DRIVER'S WINDOW)

WITH THE IGNITION SW TURNED ON AND WITH THE POWER WINDOW MASTER SW (DRIVER'S) AT **UP** POSITION, THE CURRENT FLOWING TO **TERMINAL 4** OF THE POWER WINDOW MASTER SW FLOWS TO **TERMINAL 10** OF THE MASTER SW → **TERMINAL 1** → OF THE POWER WINDOW MOTOR → **TERMINAL 2** → **TERMINAL 9** OF THE MASTER SW → **TERMINAL 8** →**GROUND** AND CAUSES THE POWER WINDOW MOTOR TO ROTATE IN THE UP DIRECTION. THE WINDOW ASCENDS ONLY WHILE THE SW IS BEING PUSHED.

IN DOWN OPERATION, THE FLOW OF CURRENT FROM **TERMINAL 4** OF THE POWER WINDOW MASTER SW TO **TERMINAL 9** OF THE MASTER SW CAUSES THE FLOW OF CURRENT FROM **TERMINAL 2** OF THE POWER WINDOW MOTOR→ **TERMINAL 1** → **TERMINAL 10** OF THE MASTER SW → **TERMINAL 8** →**GROUND,** FLOWING IN THE OPPOSITE DIRECTION TO MANUAL UP OPERATION AND CAUSING THE MOTOR TO ROTATE IN REVERSE, LOWERING THE WINDOW.

2. DRIVER'S WINDOW AUTO DOWN OPERATION

WHEN THE DRIVER'S WINDOW SW IS PUSHED STRONGLY ON THE DOWN SIDE, THE CURRENT FLOWING TO **TERMINAL 4** OF THE POWER WINDOW MASTER SW FLOWS TO THE DOWN CONTACT POINT AND AUTO DOWN CONTACT POINT OF THE DRIVER'S SW.

THIS ACTIVATES THE RELAY (DOWN SIDE) INSIDE THE POWER WINDOW MASTER SW, AND THE HOLD CIRCUIT ALSO TURNS ON AT THE SAME TIME, SO THE RELAY (DOWN SIDE) REMAINS ACTIVATED EVEN WHEN THE SW IS RELEASED.

CURRENT FLOWS AT THIS TIME FROM **TERMINAL 4** OF THE POWER WINDOW MASTER SW → **TERMINAL 9** → **TERMINAL 2** OF **POWER WINDOW MOTOR** → **TERMINAL 1** → **TERMINAL 10** OF POWER WINDOW MASTER SW → **TERMINAL 8** → **GROUND**, SO THE MOTOR CONTINUES TO OPERATE UNTIL THE DRIVER'S WINDOW IS FULLY DOWN.

WHEN THE DRIVER'S WINDOW FINISHES DOWN OPERATION THE HOLD CIRCUIT GOES OFF, SO THE RELAY (DOWN SIDE)) ALSO TURNS OFF. THIS STOPS THE CURRENT FLOWING FROM FROM **TERMINAL 4** OF THE POWER WINDOW MASTER SW TO **TERMINAL 9**, SO THE POWER WINDOW MOTOR STOPS AND AUTO DOWN OPERATION STOPS.

WHEN THE DRIVER'S SW IS PULLED ON THE UP SIDE DURING AUTO DOWN OPERATION, THE HOLD CIRCUIT IS TURNED OFF SO CURRENT FLOWS FROM **TERMINAL 4** OF THE POWER WINDOW MASTER SW TO **TERMINAL 9** IS CUT OFF AND THE POWER WINDOW MOTOR STOPS. IF THE SW REMAINS PULLED UP, THE RELAY (UPSIDE) IS ACTIVATED, SO CURRENT FLOWS FROM **TERMINAL 4** OF THE POWER WINDOW MASTER SW → **TERMINAL 10** → **TERMINAL 1** OF THE POWER WINDOW MOTOR → **TERMINAL 2** → **TERMINAL 9** → **TERMINAL 8** →**GROUND,** THE POWER WINDOW MOTOR ROTATES IN THE UP DIRECTION AND MANUAL UP OPERATION OCCURS WHILE THE SW IS PULLED UP.

3. MANUAL OPERATION BY POWER WINDOW SW (FRONT RH WINDOW)

WITH POWER WINDOW SW (FRONT RH) PULLED TO THE UP SIDE, CURRENT FLOWING FROM **TERMINAL 4** OF THE POWER WINDOW CONTROL SW FLOWS TO **TERMINAL 1** OF THE POWER WINDOW SW → **TERMINAL 2** OF THE POWER WINDOW MOTOR → **TERMINAL 1** → **TERMINAL 3** OF THE POWER WINDOW SW → **TERMINAL 5** → **TERMINAL 7** OF THE MASTER SW → **TERMINAL 8** → **GROUND** AND CAUSES THE POWER WINDOW MOTOR (FRONT RH) TO ROTATE IN THE UP DIRECTION. UP OPERATION CONTINUES ONLY WHILE THE POWER WINDOW SW IS PULLED TO THE UP SIDE. WHEN THE POWER WINDOW SW (FRONT RH) IS PULLED TO THE DOWN SIDE, THE CURRENT FLOWING TO THE MOTOR FLOWS IN THE OPPOSITE DIRECTION, FROM **TERMINAL 1** TO **TERMINAL 2,** AND THE MOTOR ROTATES IN REVERSE. WHEN THE WINDOW LOCK SW IS PUSHED TO THE LOCK SIDE, THE GROUND CIRCUIT TO THE PASSENGER'S WINDOW BECOMES OPEN.

AS A RESULT, EVEN IF OPEN/CLOSE OPERATION OF THE PASSENGER'S WINDOW IS TRIED, THE CURRENT FROM **TERMINAL 8** OF THE POWER WINDOW MASTER SW IS NOT GROUNDED AND THE MOTOR DOES NOT ROTATE, SO THE PASSENGER'S WINDOW CANNOT BE OPERATED AND WINDOW LOCK OCCURS. FURTHERMORE, REAR LH, RH WINDOW OPERATE THE SAME AS THE ABOVE CIRCUIT.

4. KEY OFF POWER WINDOW OPERATION

WITH THE IGNITION SW TURNED FROM ON TO OFF, THE THEFT DETERRENT AND **DOOR** LOCK CONTROL ECU AND CURRENT FLOWS FROM DOOR FUSE **TERMINAL (A) 9** OF THE ECU OR DOME FUSE TO **TERMINAL (B)1** OF THE ECU → **TERMINAL (A) 6** → **TERMINAL 1** OF THE POWER RELAY → **TERMINAL 2** → **GROUND** FOR ABOUT **60** SECONDS. THE SAME AS NORMAL OPERATION, THE CURRENT FLOWS FROM **DOOR** FUSE →**TERMINAL 5** OF THE POWER MAIN RELAY → **TERMINAL 3** → **TERMINAL 4** OF THE POWER WINDOW MASTER SW, AND **TERMINAL 4** OF THE POWER WINDOW CONTROL SW RH. AS A RESULT, FOR ABOUT **60** SECONDS AFTER THE IGNITION SW IS TURNED. THE FUNCTIONING OF THIS RELAY MAKES IT POSSIBLE TO RAISE AND LOWER THE POWER WINDOW ALSO, BY OPENING THE FRONT DOOR (DOOR OPEN DETECTION SW ON ED) WITHIN ABOUT **60** SECONDS AFTER TURNING THE IGNITION SW TO OFF, A SIGNAL IS INPUT TO **TERMINAL (B) 19, (B) 7 OF THE** THEFT DETERRENT AND DOOR LOCK CONTROL ECU. AS A RESULT, THE ECU TURNED OFF AND UP AND DOWN MOVEMENT OF THE POWER WINDOW STOPS.

SERVICE HINTS

P 8 POWER WINDOW MASTER SW

4-GROUND : APPROX. **12** VOLTS WITH THE IGNITION SW AT **ON** POSITION
8-GROUND : ALWAYS CONTINUITY
10-GROUND : APPROX. **12** VOLTS WITH THE IGNITION SW **ON** AND MASTER SW (DRIVER'S WINDOW) AT **UP** POSITION
9-GROUND : APPROX. **12** VOLTS WITH THE IGNITION SW **ON** AND MASTER SW (DRIVER'S WINDOW) AT **DOWN** OR **AUTO DOWN** POSITION

WINDOW LOCK SW

OPEN WITH THE WINDOW LOCK SW AT **LOCK** POSITION

: PARTS LOCATION

CODE	SEE PAGE	CODE	SEE PAGE	CODE		SEE PAGE
D10	30	P 8	25	T 7	A	29
D11	30	P 9	27	T13	B	29
P 7	30	P10	27			

: RELAY BLOCKS

CODE	SEE PAGE	RELAY BLOCKS (RELAY BLOCK LOCATION)
2	22	R/B NO. 2 (ENGINE COMPARTMENT LEFT)

: JUNCTION BLOCK AND WIRE HARNESS CONNECTOR

CODE	SEE PAGE	JUNCTION BLOCK AND WIRE HARNESS (CONNECTOR LOCATION)
1B	20	ENGINE ROOM MAIN WIRE AND J/B NO. 1 (LEFT KICK PANEL)
1D	20	FRONT DOOR LH WIRE AND J/B NO. 1 (LEFT KICK PANEL)
1E	20	INSTRUMENT PANEL WIRE AND J/B NO. 1 (LEFT KICK PANEL)
1H	20	COWL WIRE AND J/B NO. 1 (LEFT KICK PANEL)
1I		
1J		

: CONNECTOR JOINING WIRE HARNESS AND WIRE HARNESS

CODE	SEE PAGE	JOINING WIRE HARNESS AND WIRE HARNESS (CONNECTOR LOCATION)
IC2	36	FLOOR NO. 2 WIRE AND COWL WIRE (LEFT KICK PANEL)
ID1	36	FRONT DOOR LH WIRE AND INSTRUMENT PANEL WIRE (LEFT KICK PANEL)
IF1	36	INSTRUMENT PANEL WIRE AND COWL WIRE (INSTRUMENT PANEL REINFORCEMENT LH)
IF2	36	INSTRUMENT PANEL WIRE AND COWL WIRE (INSTRUMENT PANEL REINFORCEMENT LH)
IF3	36	INSTRUMENT PANEL WIRE AND COWL WIRE (RIGHT KICK PANEL)
IL1	38	FRONT DOOR RH WIRE AND INSTRUMENT PANEL WIRE (RIGHT KICK PANEL)

: GROUND POINTS

CODE	SEE PAGE	GROUND POINTS LOCATION
IE	36	LEFT KICK PANEL
IG	36	RIGHT KICK PANEL
IH		
BI	40	LEFT QUARTER PILLAR

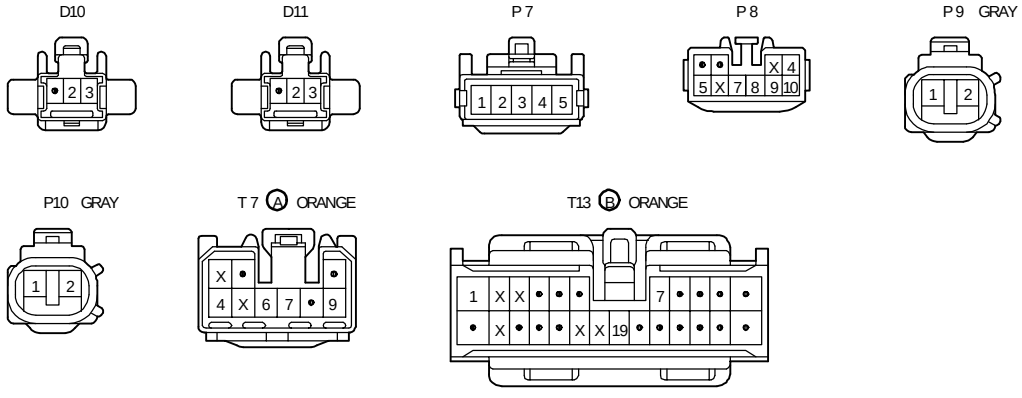

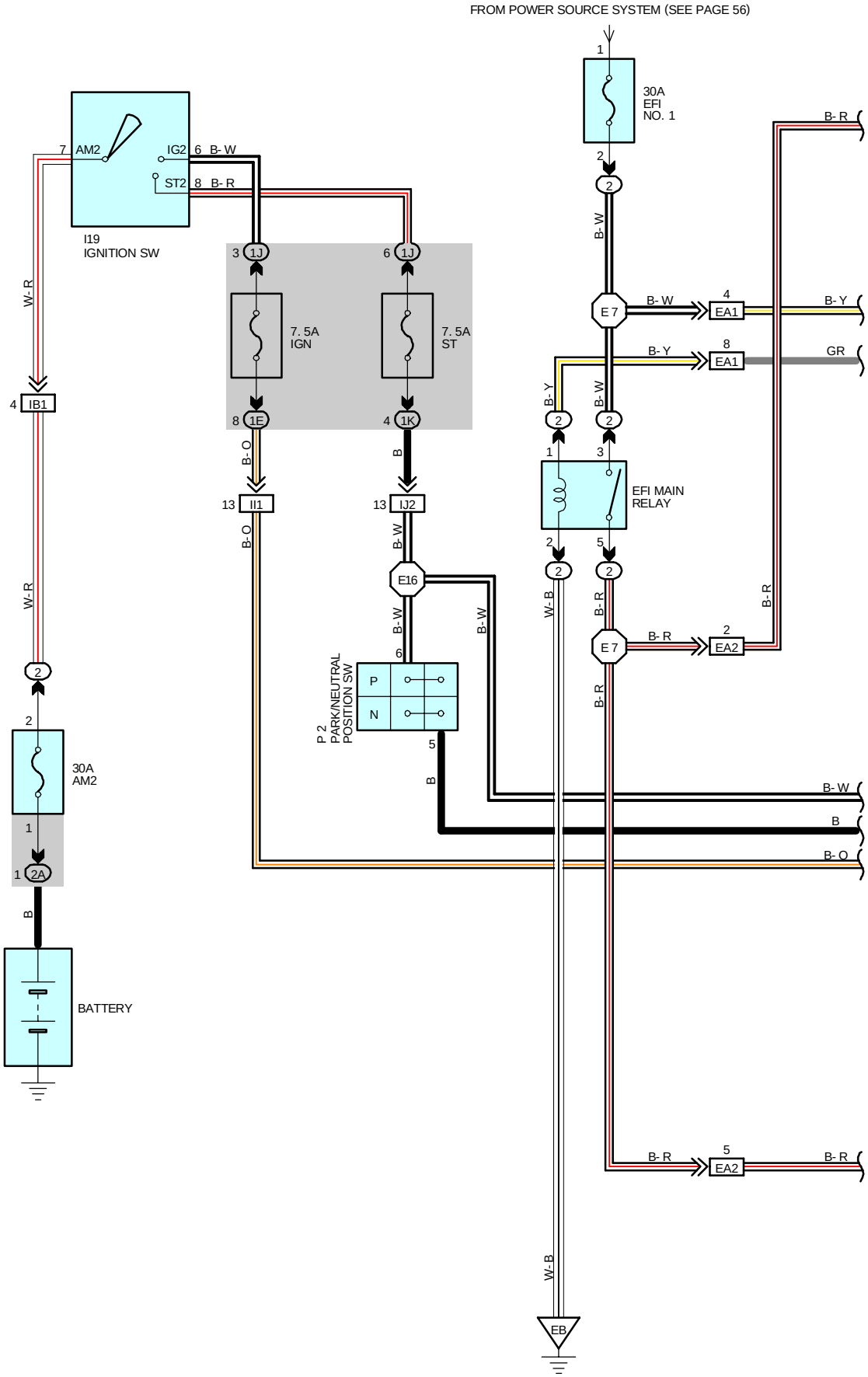
FROM POWER SOURCE SYSTEM (SEE PAGE 56)
30A EFI NO. 1
I19 IGNITION SW
7 AM2
IG2 6 B- W
ST2 8 B- R
7. 5A IGN
7. 5A ST
EFI MAIN RELAY
P 2 PARK/NEUTRAL POSITION SW
P
N
30A AM2
BATTERY
E 7
E16
EA1
EA2
IB1
II1
IJ2
1J
1E
1K
2A
EB
W- R
B- O
B
B- W
B- Y
GR
B- R
W- B

AND A/T INDICATOR (2JZ-GTE)

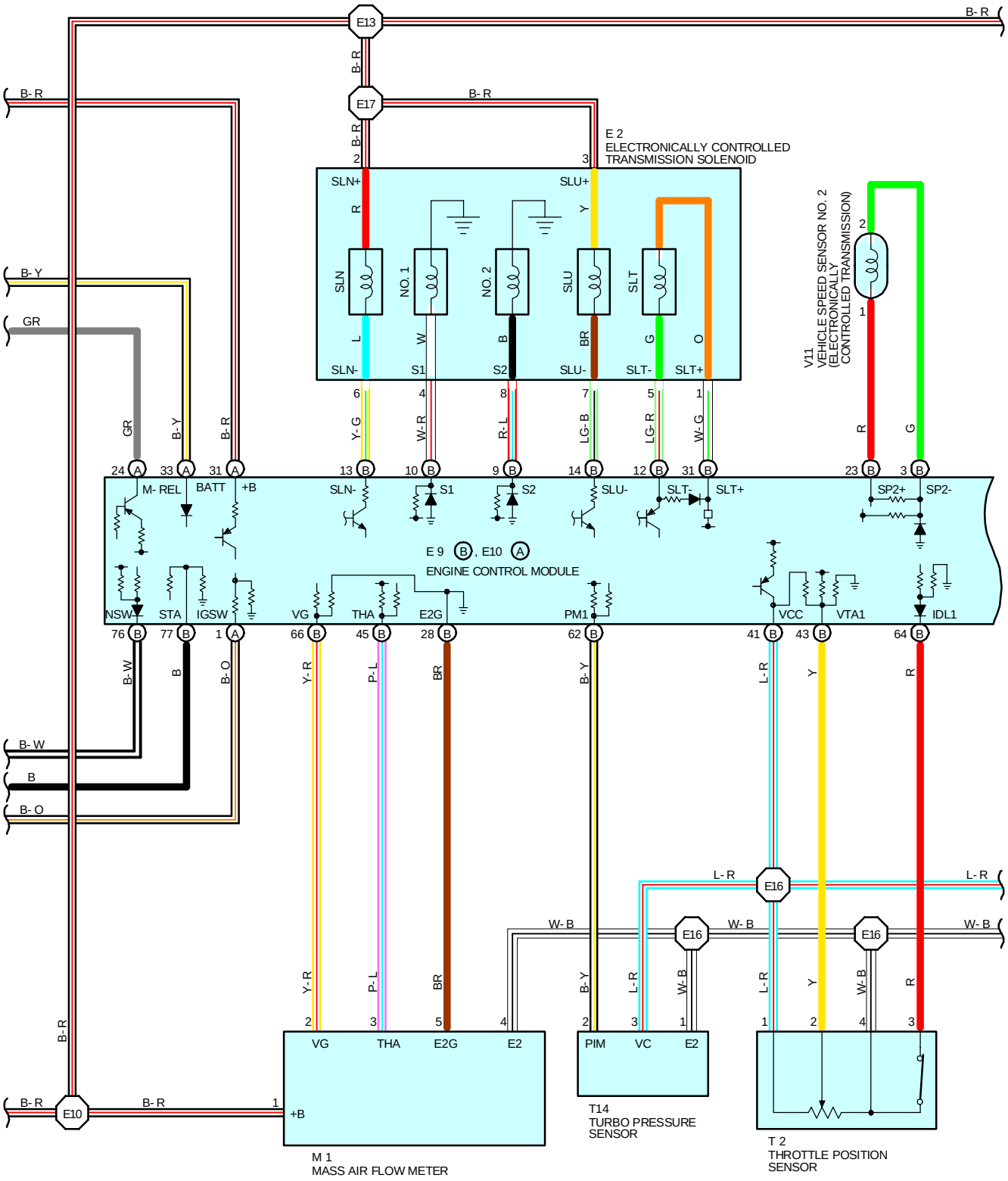

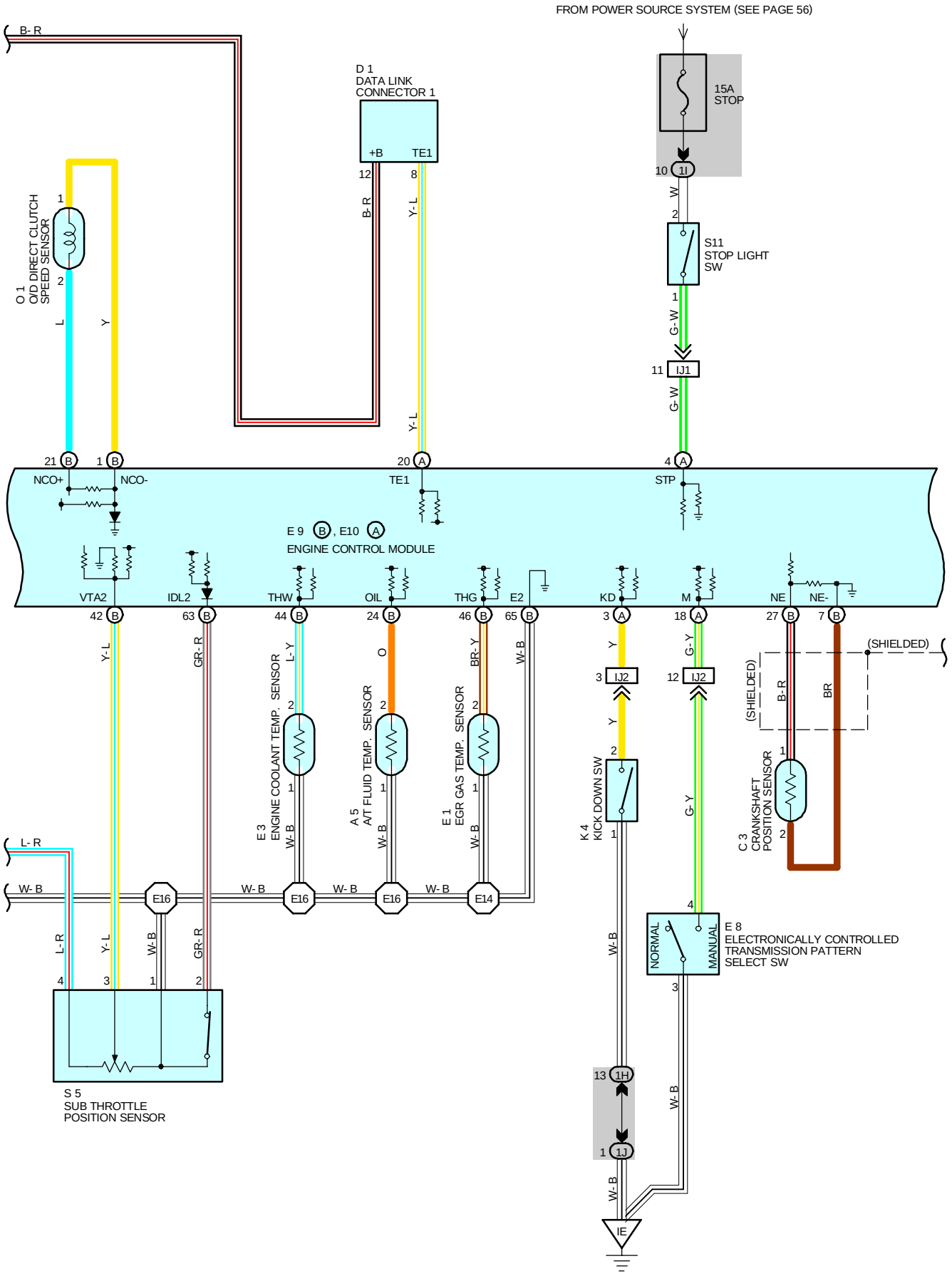
FROM POWER SOURCE SYSTEM (SEE PAGE 56)
B- R
D 1
DATA LINK
CONNECTOR 1
+B
TE1
12
8
B- R
Y- L
15A
STOP
10
1I
W
2
S11
STOP LIGHT
SW
1
G- W
11
IJ1
G- W
O 1
O/D DIRECT CLUTCH
SPEED SENSOR
1
2
L
Y
21
B
1
B
20
A
4
A
NCO+
NCO-
TE1
STP
E 9 B , E10 A
ENGINE CONTROL MODULE
VTA2
IDL2
THW
OIL
THG
E2
KD
M
NE
NE-
42
B
63
B
44
B
24
B
46
B
65
B
3
A
18
A
27
B
7
B
Y- L
GR- R
L- Y
O
BR- Y
W- B
Y
G- Y
B- R
BR
(SHIELDED)
E 3
ENGINE COOLANT TEMP. SENSOR
A 5
A/T FLUID TEMP. SENSOR
E 1
EGR GAS TEMP. SENSOR
K 4
KICK DOWN SW
C 3
CRANKSHAFT
POSITION SENSOR
L- R
W- B
E16
E16
E16
E14
3
IJ2
12
IJ2
L- R
Y- L
W- B
GR- R
4
3
1
2
G- Y
E 8
ELECTRONICALLY CONTROLLED
TRANSMISSION PATTERN
SELECT SW
NORMAL
MANUAL
13
1H
1
1J
IE
S 5
SUB THROTTLE
POSITION SENSOR

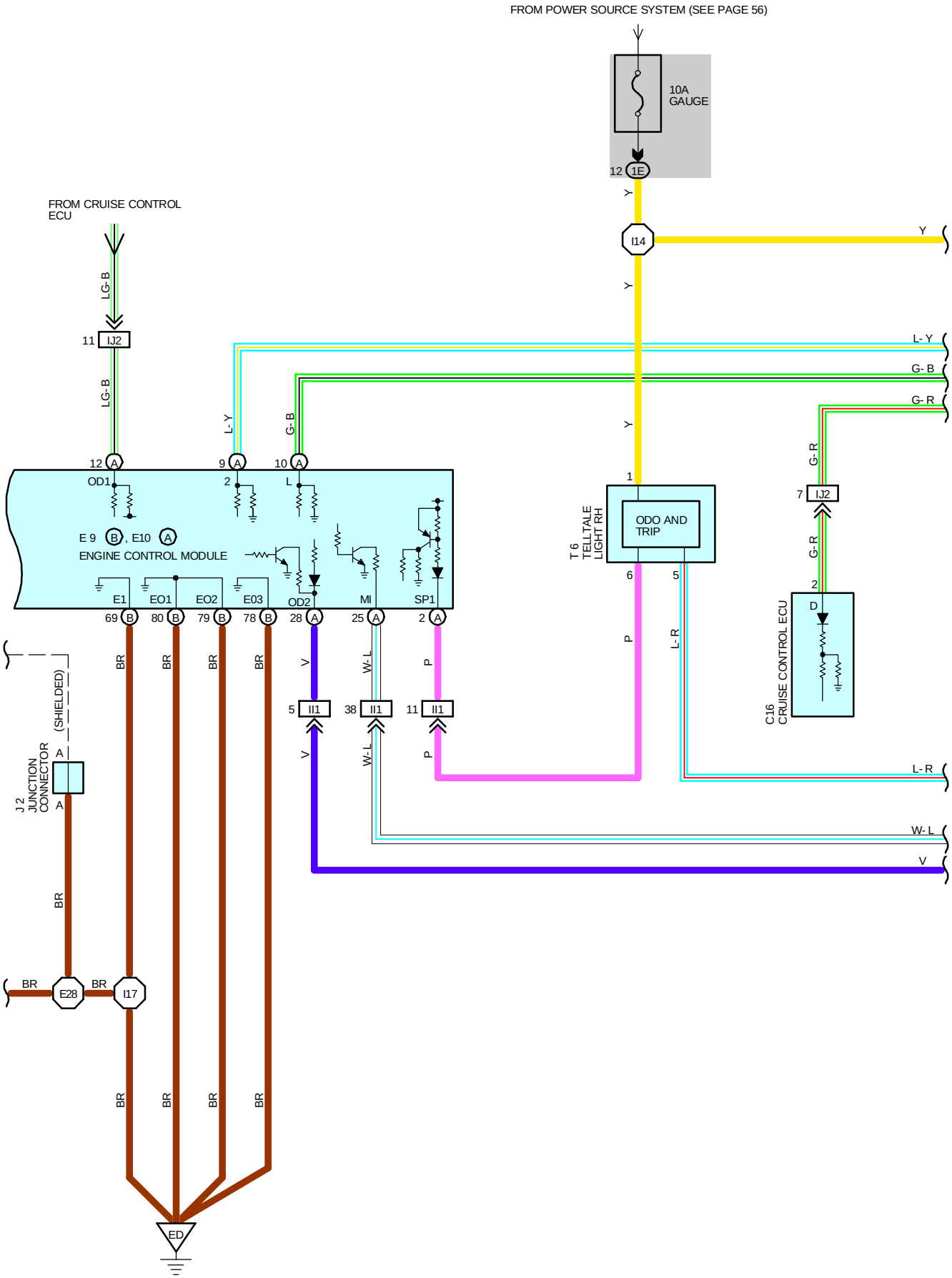
FROM POWER SOURCE SYSTEM (SEE PAGE 56)
10A GAUGE
12 1E
Y
I14
FROM CRUISE CONTROL ECU
LG-B
11 IJ2
LG-B
L-Y
G-B
G-R
12 A
9 A
10 A
OD1
2
L
E 9 B, E10 A
ENGINE CONTROL MODULE
E1
EO1
EO2
E03
OD2
MI
SP1
69 B
80 B
79 B
78 B
28 A
25 A
2 A
1
ODO AND TRIP
T 6 TELLTALE LIGHT RH
6
5
P
L-R
7 IJ2
G-R
G-R
2
D
C16 CRUISE CONTROL ECU
BR
V
W-L
P
5 II1
38 II1
11 II1
(SHIELDED)
J 2 JUNCTION CONNECTOR
A
A
BR
BR
E28
BR
I17
ED
W-L
V

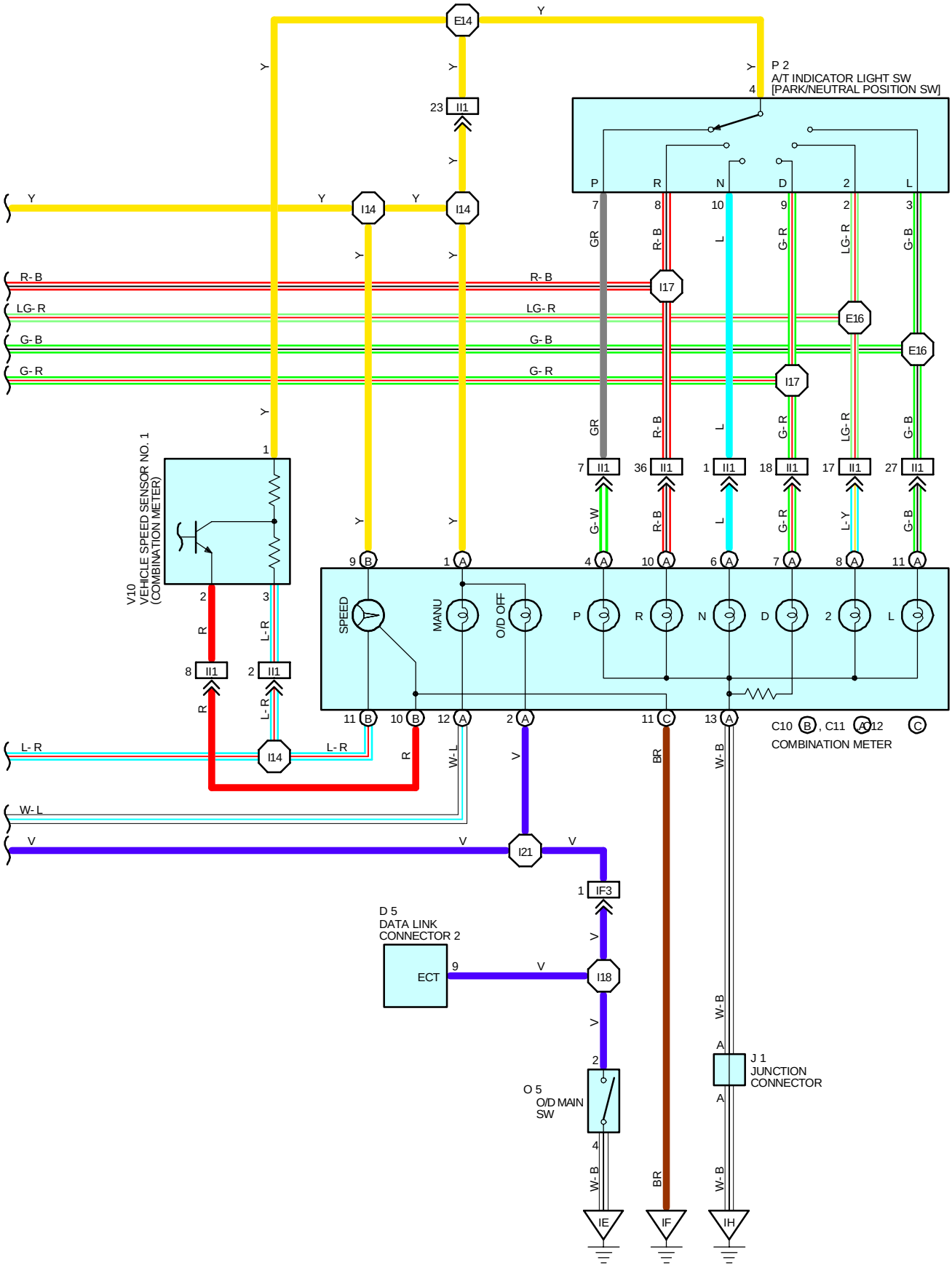
E14
I14
I17
E16
I21
IF3
I18
P 2
A/T INDICATOR LIGHT SW
[PARK/NEUTRAL POSITION SW]
V10
VEHICLE SPEED SENSOR NO. 1
(COMBINATION METER)
SPEED
MANU
O/D OFF
C10 , C11 , C12
COMBINATION METER
D 5
DATA LINK
CONNECTOR 2
ECT
O 5
O/D MAIN
SW
J 1
JUNCTION
CONNECTOR
IE
IF
IH

SYSTEM OUTLINE

THIS SYSTEM ELECTRICALLY CONTROLS THE LINE PRESSURE, THROTTLE PRESSURE, LOCK-UP PRESSURE AND ACCUMULATOR PRESSURE ETC. THROUGH THE SOLENOID VALVE. THE ELECTRONICALLY CONTROLLED TRANSMISSION IS A SYSTEM WHICH PRECISELY CONTROLS GEAR SHIFT TIMING AND LOCK-UP TIMING IN RESPONSE TO THE VEHICLE'S DRIVING CONDITIONS AND THE ENGINE OPERATING CONDITIONS DETECTED BY VARIOUS SENSORS, MAKING SMOOTH DRIVING POSSIBLE BY SHIFT SELECTION FOR EACH GEAR WHICH IS THE MOST APPROPRIATE TO THE DRIVING CONDITIONS AT THAT TIME, AND CONTROLS THE ENGINE TORQUE DURING SHIFTING TO ACHIEVE OPTIMUM SHIFT FEELING.

1. GEAR SHIFT OPERATION

WHEN DRIVING, THE ENGINE WARM UP CONDITION IS INPUT AS A SIGNAL TO **TERMINAL (B) 44** OF THE ENGINE CONTROL MODULE FROM THE ENGINE COOLANT TEMP. SENSOR AND THE VEHICLE SPEED SIGNAL FROM VEHICLE SPEED SENSOR NO. 2 IS INPUT TO **TERMINAL (B) 23** OF THE ENGINE CONTROL MODULE. AT THE SAME TIME, THE THROTTLE VALVE OPENING SIGNAL FROM THE THROTTLE POSITION SENSOR (MAIN) IS INPUT TO **TERMINAL (B) 43** OF THE ENGINE CONTROL MODULE AS THROTTLE ANGLE SIGNAL.

BASED ON THESE SIGNALS, THE ENGINE CONTROL SELECTS THE BEST SHIFT POSITION FOR DRIVING CONDITIONS AND SENDS CURRENT TO THE ELECTRONICALLY CONTROLLED TRANSMISSION SOLENOIDS.

WHEN SHIFTING TO 1ST SPEED, THE CURRENT FLOWS FROM **TERMINAL (B) 10** OF THE ENGINE CONTROL MODULE → **TERMINAL 4** OF ELECTRONICALLY CONTROLLED TRANSMISSION SOLENOID→**GROUND** AND CONTINUITY TO NO. 1 SOLENOID CAUSES THE SHIFT (NO. 2 SOLENOID DOES NOT HAVE CONTINUITY AT THIS TIME.)

FOR 2ND SPEED, THE CURRENT FLOWS SIMULTANEOUSLY FROM **TERMINAL (B) 9** OF THE ENGINE CONTROL MODULE → **TERMINAL 8** OF ELECTRONICALLY CONTROLLED TRANSMISSION SOLENOID → **GROUND** AND FROM **TERMINAL (B) 10** OF THE ENGINE CONTROL MODULE → **TERMINAL 4** OF ELECTRONICALLY CONTROLLED TRANSMISSION SOLENOID → **GROUND,** AND CONTINUITY TO NO. 1 AND NO. 2 SOLENOIDS CAUSES THE SHIFT.

FOR 3RD SPEED, THERE IS NO CONTINUITY TO NO. 1 SOLENOID, ONLY TO NO. 2 SOLENOID, CAUSING THE SHIFT.

SHIFTING INTO THE 4TH SPEED (OVERDRIVE) OCCURS WHEN NO CURRENT FLOWS TO NO. 1 AND NO. 2 SOLENOIDS. THE NO. 4 SOLENOID (FOR ACCUMULATOR BACK PRESSURE MODULATION) IS INSTALLED TO ADJUST THE BACK PRESSURE ON THE ACCUMULATOR AND CONTROLS THE HYDRAULIC PRESSURE DURING SHIFTING AND LOCK-UP IN ORDER TO PROVIDE SMOOTH SHIFTING WITH LITTLE SHIFT SHOCK.

2. LOCK-UP OPERATION

WHEN THE ENGINE CONTROL MODULE DECIDES BASED ON EACH SIGNAL THAT THE LOCK-UP CONDITION HAS BEEN MET, THE CURRENT THROUGH EFI NO. 1 FUSE FLOWS FROM THE EFI MAIN RELAY → **TERMINAL 3** OF ELECTRONICALLY CONTROLLED TRANSMISSION SOLENOID → **TERMINAL 7**→ **TERMINAL (B) 14** OF THE ENGINE CONTROL MODULE → **GROUND**,SO CONTINUITY TO NO. 3 (FOR LOCK-UP) CAUSES LOCK-UP.

3. STOP LIGHT SW CIRCUIT

IF THE BRAKE PEDAL IS DEPRESSED (STOP LIGHT SW ON) WHEN DRIVING IN LOCK-UP CONDITION, A SIGNAL IS INPUT TO **TERMINAL(A) 4** OF THE ENGINE CONTROL MODULE. THE ENGINE CONTROL MODULE OPERATES AND CUTS THE CURRENT TO THE SOLENOID.TO RELEASE LOCK-UP.

4. OVERDRIVE CIRCUIT

* O/D MAIN SW ON

  WHEN THE O/D MAIN SW IS TURNED ON (SW POINT IS OPEN), A SIGNAL IS INPUT TO **TERMINAL (A) 28** OF THE ENGINE CONTROL MODULE, AND THE ELECTRONICALLY CONTROLLED TRANSMISSION CAUSES SHIFT TO OVERDRIVE WHEN THE CONDITIONS FOR OVERDRIVE ARE MET.

* O/D MAIN SW OFF

  WHEN THE O/D MAIN SW IS TURNED OFF (SW POINT IS CLOSED), THE CURRENT FLOWING THROUGH THE O/D OFF INDICATOR LIGHT FLOWS TO **GROUND** BY WAY OF THE O/D MAIN SW AND CAUSES THE O/D OFF INDICATOR LIGHT TO LIGHT UP. AT THE SAME TIME, A SIGNAL IS INPUT TO **TERMINAL (A) 28** OF THE ENGINE CONTROL MODULE AND THE ELECTRONICALLY CONTROLLED TRANSMISSION PREVENTS SHIFT INTO OVERDRIVE.

5. ELECTRONICALLY CONTROLLED TRANSMISSION PATTERN SELECT SW CIRCUIT

WHEN THE ELECTRONICALLY CONTROLLED TRANSMISSION PATTERN SELECT SW IS SWITCHED FROM NORMAL TO MANUAL, A SIGNAL IS INPUT TO **TERMINAL (A) 18** OF THE ENGINE CONTROL MODULE. INPUT OF THIS SIGNAL CAUSES CURRENT TO FLOW FROM THE **GAUGE** FUSE TO **TERMINAL (A) 1** OF THE COMBINATION METER → **TERMINAL (A) 12**→ **TERMINAL (A) 25** OF THE ENGINE CONTROL MODULE → **GROUND,** LIGHTING UP THE INDICATOR LIGHT. IF THE A/T SHIFT LEVER IS THEN SHIFTED **TO "2''** POSITION, THE ENGINE CONTROL MODULE ENABLES THE VEHICLE TO START OFF WITH THE TRANSMISSION IS 2ND GEAR, THUS PERMITTING EASING STARTING OFF AND DRIVING ON SLIPPERY ROADS.

6. CRUISE CONTROL

WHEN CRUISE CONTROL OPERATION IS SELECTED A SIGNAL IS INPUT TO **TERMINAL (A) 12** OF THE ENGINE CONTROL MODULE FROM CRUISE CONTREOL ECU. AS A RESULT, THE ENGINE CONTROL MODULE OPERATES AND CONTROLS OVERDRIVE, LOCK-UP AND SO ON FOR SMOOTH DRIVING.

SERVICE HINTS

E2 ELECTRONICALLY CONTROLLED TRANSMISSION SOLENOID

8-GROUND:APPROX. **13.2Ω:**
4-GROUND:APPROX. **13.2Ω:**
6.2:APPROX. **8.3 Ω:**
7.3:APPROX. **3.8 Ω:**
1.5:APPROX. **3.8 Ω:**

E 3 ENGINE COOLANT TEMP. SENSOR

1-2:1- **10-20** KΩ μ− **20•C −4•F**
4-7 KΩ (**0•C −32•F**
2-3 KΩ μ **20•C −68•F**
0.9-1.3 KΩ μ **40•C - 104•F**
0.4-0.7 KΩ μ **60•C −140•F**
0.2-0.4 KΩ μ **80•C −176•F**

E 9 (B), E10 (A) ENGINE CONTROL MODULE

BATT-E1:AL WAYS **9-14** VOLTS
IGSW-E1: **9-14** VOLTS WITH THE IGNITION SW ON
+B-E:**9-14** VOLTS WITH THE IGNITION SW ON
IDL1-E1:**0-1.5** VOLTS WITH THE IGNITION SW ON AND THE THROTTLE VALVE FULLY CLOSED
9-14 VOLTS WITH THE IGNITION SW ON AND THE THROTTLE VALVE FULLY OPEN
VTA1-E1: **0.3-0.8** VOLTS WITH THE IGNITION SW ON AND THE THROTTLE VALVE FULLY CLOSED
3.2-4.9 VOLTS WITH THE IGNITION SW ON AND THE THROTTLE VALVE FULLY OPEN
STA-E1: **6-14** VOLTS WITH THE ENGINE CRANKING
M-REL-E1: **9-14** VOLTS WITH THE IGNITION SW ON
VCC-E1:**4.5-5.5** VOLTS WITH THE IGNITION SW ON
L-E1:APPROX. **7.5-14** VOLTS WITH THE SHIFT LEVER AT "**L**" POSITION
2-E1:APPROX. **7.5-14** VOLTS WITH THE SHIFT LEVER AT **"2**" POSITION
R-E1:APPROX. **7.5-14** VOLTS WITH THE SHIFT LEVER AT "**R**" POSITION

0 1 O/D DIRECT CLUTCH SPEED SENSOR

1-2:APPROX. **620 Ω:**

V11 VEHICLE SPEED SENSOR NO. 2 (ELECTRONICALLY CONTROLLED TRANSMISION)

1-2:APPROX. **620 Ω:**

E 8 ELECTRONICALLY CONTROLLED TRANSMISSION PATTERN SELECT SW

4-3:CLOSED WITH ELECTRONICALLY CONTROLLED TRANSMISSION PATTERN SELECT SW AT MANUAL POSITION

○ : PARTS LOCATION

CODE	SEE PAGE	CODE	SEE PAGE	CODE	SEE PAGE
A 5	24(2JZ-GTE)	E 3	24(2JZ-GTE)	0 5	29
C 3	24(2JZ-GTE)	E 8	29	P2	25(2JZ-GTE)
C10 B	28	E 9 B	29	S 5	25
C11 A	28	E10 A	29	S11	29
C12 C	28	I19	29	T 2	25(2JZ-GTE)
C16	28	J 1	29	T 6	29
D 1	24(2JZ-GTE)	J 2	29	T14	25
D 5	28	K 4	29	V10	25(2JZ-GTE)
E 1	24(2JZ-GTE)	M 1	25	V11	25(2JZ-GTE)
E 2	24(2JZ-GTE)	0 1	25		

▭ : RELAY BLOCKS

CODE	SEE PAGE	RELAY BLOCKS (RELAY BLOCK LOCATION)
2	22	R/B NO. 2 (ENGINE COMPARTMENT LEFT)

▭ : JUNCTION BLOCK AND WIRE HARNESS CONNECTOR

CODE	SEE PAGE	JUNCTION BLOCK AND WIRE HARNESS (CONNECTOR LOCATION)
IE	20	INSTRUMENT PANEL WIRE AND J/B NO. 1 (LEFT KICK PANEL)
1H	20	COWL WIRE AND J/B NO. 1 (LEFT KICK PANEL)
1I		
1J		
1K		
2A	22	BATTERY AND J/B NO. 2 (ENGINE COMPARTMENT LEFT)

AND A/T INDICATOR (2JZ-GTE)

: CONNECTOR JOINING WIRE HARNESS AND WIRE HARNESS

CODE	SEE PAGE	JOINING WIRE HARNESS AND WIRE HARNESS (CONNECTOR LOCATION)
EA1	32(2JZ-GTE)	ENGINE WIRE AND ENGINE ROOM MAIN WIRE (NEAR THE R/B NO. 2)
EA2	32	
IB1	36	ENGINE ROOM MAIN WIRE AND COWL WIRE (LEFT KICK PANEL)
IF3	36	INSTRUMENT PANEL AND COWL WIRE (RIGHT KICK PANEL)
II1	38	ENGINE WIRE AND INSTRUMENT PANEL (RIGHT KICK PANEL)
IJ1	38	ENGINE WIRE AND COWL WIRE (RIGHT KICK PANEL)
IJ2		

: GROUND POINTS

CODE	SEE PAGE	GROUND POINTS LOCATION
EB	32(2JZ-GTE)	FRONT SIDE OF LEFT FENDER
ED	32(2JZ-GTE)	REAR SIDE OF INTAKE MANIFOLD
IE	36	LEFT KICK PANEL
IF		
IH	36	RIGHT KICK PANEL

: SPLICE POINTS

CODE	SEE PAGE	WIRE HARNESS WITH SPLICE POINTS	CODE	SEE PAGE	WIRE HARNESS WITH SPLICE POINTS
E 7	32	ENGINE ROOM MAIN WIRE	E17	32	ENGINE WIRE
E10	32	ENGINE WIRE	I14	38	INSTRUMENT PANEL WIRE
E13			I17	38	ENGINE WIRE
E14			I18	38	COWL WIRE
E16			I21	38	INSTRUMENT PANEL WIRE

A 5 GRAY

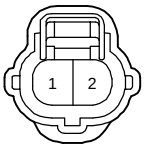

C 3 DARK GRAY

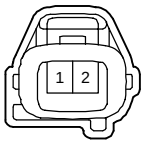

C10 (B) BLUE

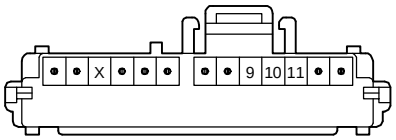

C11 (A) BROWN

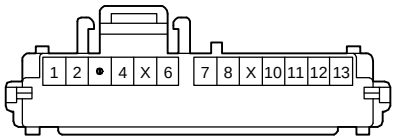

C12 (C)

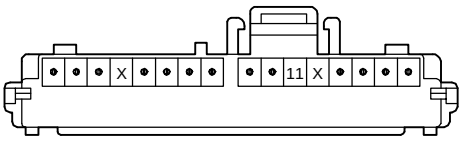

C16 GREEN

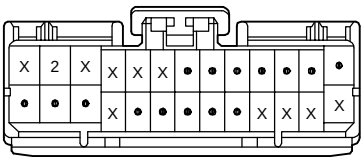

D 1 BLACK

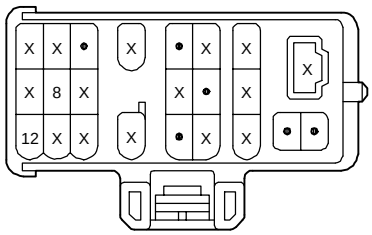

D 5 DARK GRAY

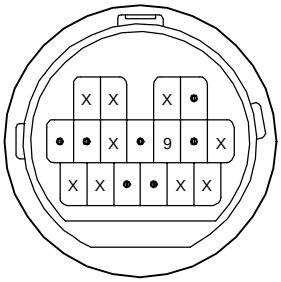

E 1 DARK GRAY

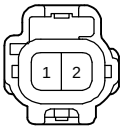

E 2 GRAY

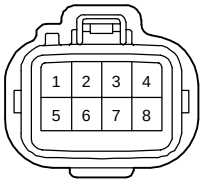

E 3 DARK GRAY



E 8

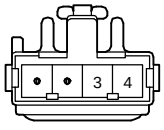

E9 (B) DARK GRAY

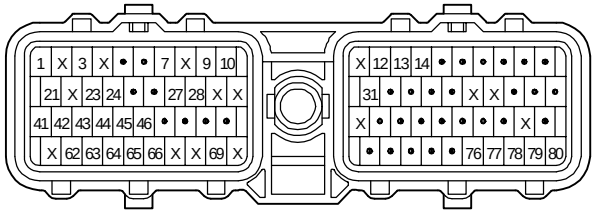

E10 (A) DARK GRAY

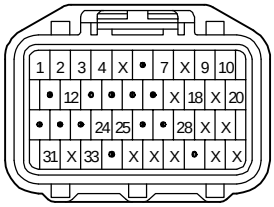

I19

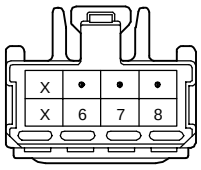

J1

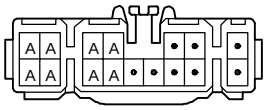

(HINT : SEE PAGE 7)

J2

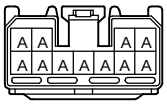

(HINT : SEE PAGE 7)

K4 BLACK

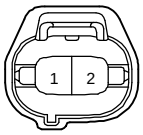

M1 BLACK

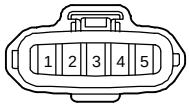

O1 BLACK

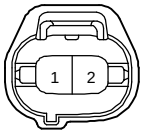

O5 BLACK

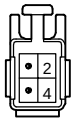

P2 GRAY

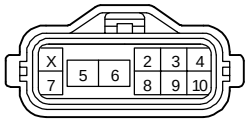

S5 BLACK



S11 BLUE

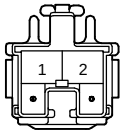

T2 BLACK

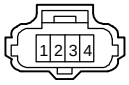

T6

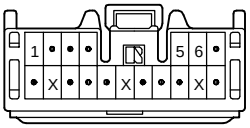

T14 BLACK



V10 BLACK



V11 BLACK

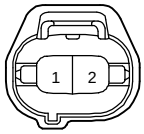

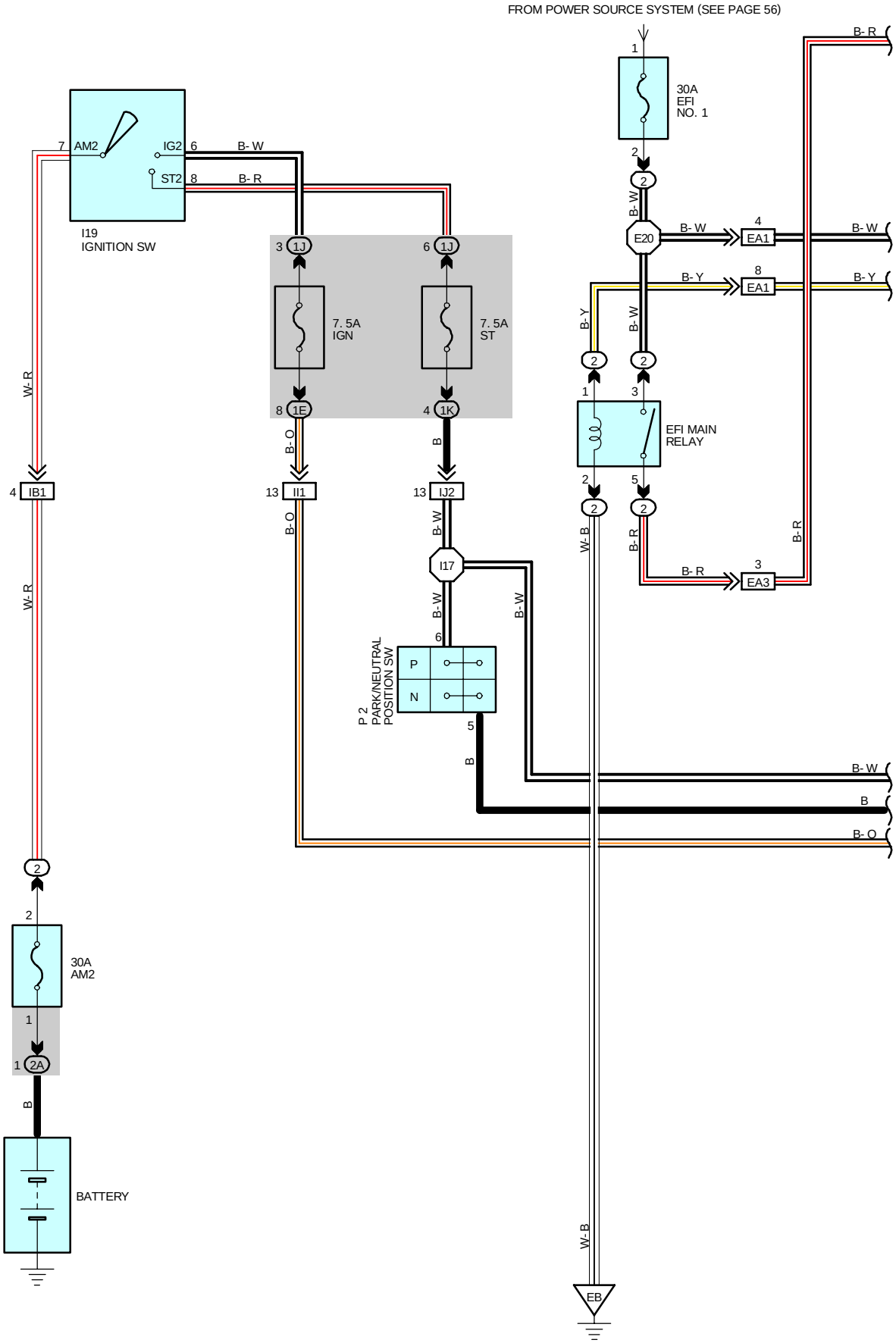
FROM POWER SOURCE SYSTEM (SEE PAGE 56)
30A EFI NO. 1
I19 IGNITION SW
AM2
IG2
ST2
B- W
B- R
7. 5A IGN
7. 5A ST
EFI MAIN RELAY
E20
EA1
EA3
IB1
II1
IJ2
I17
P 2 PARK/NEUTRAL POSITION SW
30A AM2
BATTERY
EB
W- R
B- O
B
B- Y
W- B

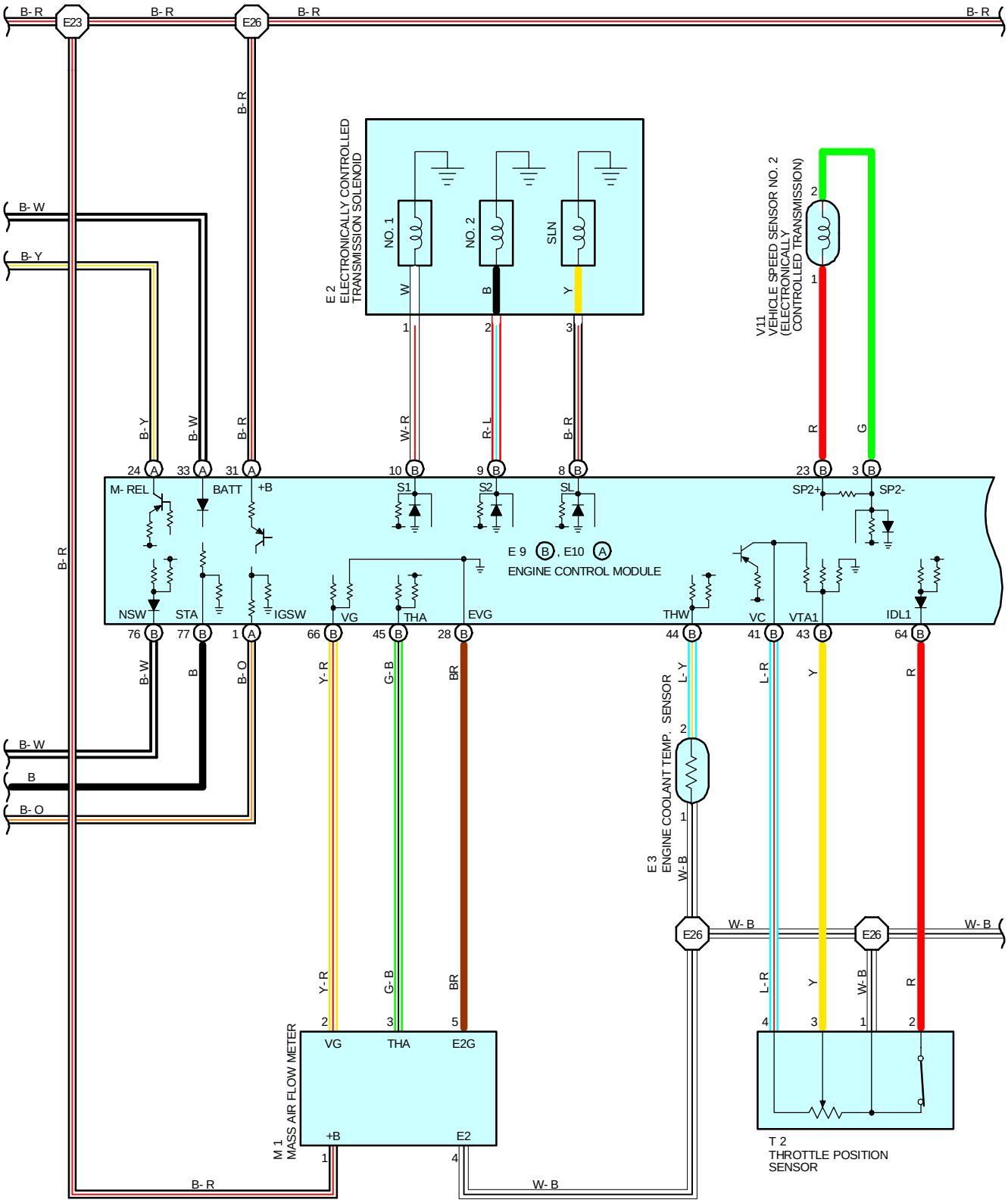
B- R
E23
E26
B- W
B- Y
B- O
B
E 2
ELECTRONICALLY CONTROLLED TRANSMISSION SOLENOID
NO. 1
NO. 2
SLN
W
B
Y
W- R
R- L
B- R
V11
VEHICLE SPEED SENSOR NO. 2 (ELECTRONICALLY CONTROLLED TRANSMISSION)
R
G
M- REL
BATT
+B
S1
S2
SL
SP2+
SP2-
E 9 B , E10 A
ENGINE CONTROL MODULE
NSW
STA
IGSW
VG
THA
EVG
THW
VC
VTA1
IDL1
E 3
ENGINE COOLANT TEMP. SENSOR
L- Y
L- R
Y
R
W- B
Y- R
G- B
BR
M 1
MASS AIR FLOW METER
E2G
E2
T 2
THROTTLE POSITION SENSOR

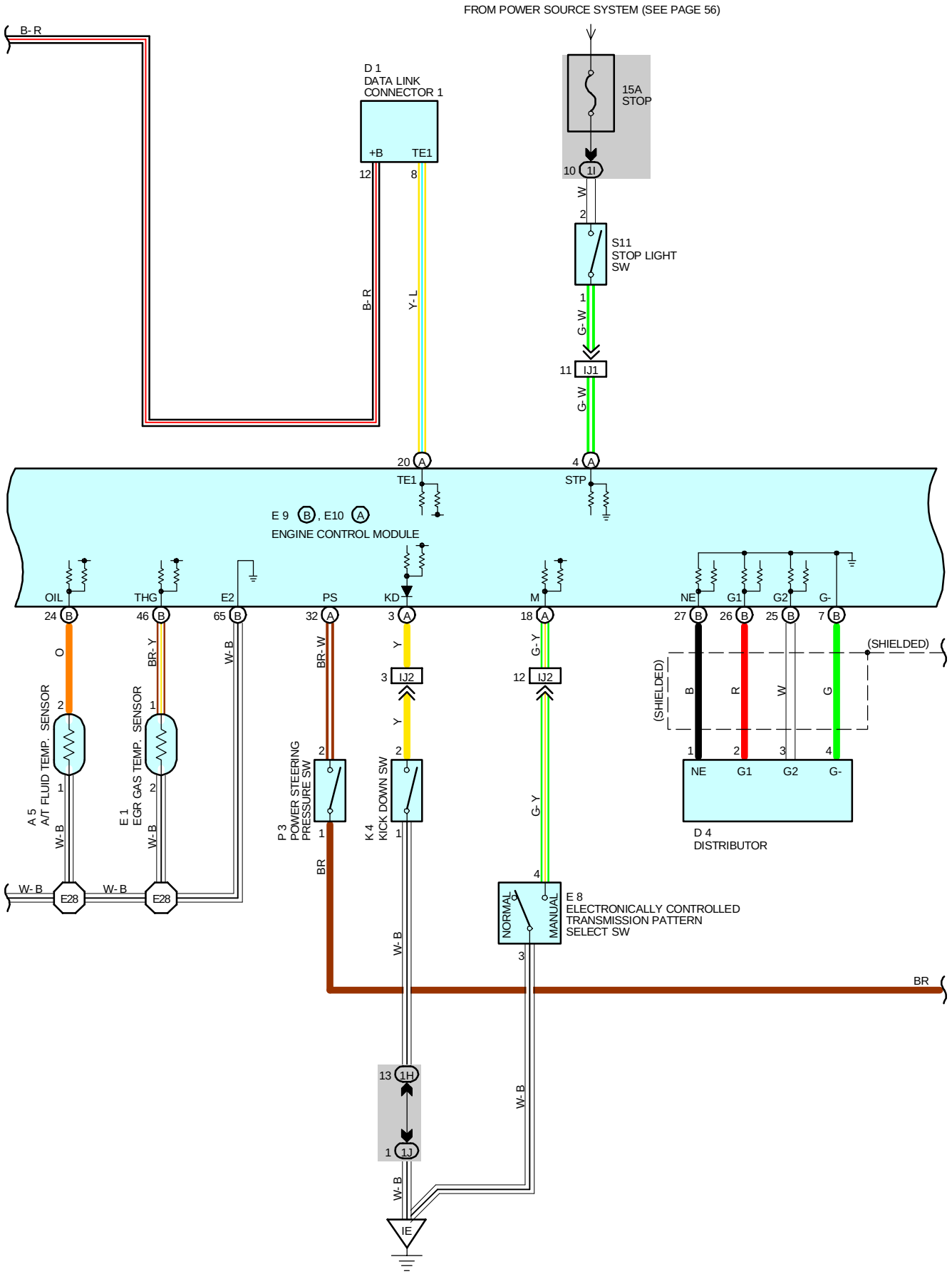
FROM POWER SOURCE SYSTEM (SEE PAGE 56)
B- R
D 1
DATA LINK
CONNECTOR 1
+B
TE1
12
8
B- R
Y- L
15A
STOP
10
1I
W
2
S11
STOP LIGHT
SW
1
G- W
11
IJ1
G- W
20
A
TE1
4
A
STP
E 9
B
, E10
A
ENGINE CONTROL MODULE
OIL
THG
E2
PS
KD
M
NE
G1
G2
G-
24
B
46
B
65
B
32
A
3
A
18
A
27
B
26
B
25
B
7
B
O
BR- Y
W- B
BR- W
Y
G- Y
(SHIELDED)
A 5
A/T FLUID TEMP. SENSOR
E 1
EGR GAS TEMP. SENSOR
P 3
POWER STEERING
PRESSURE SW
K 4
KICK DOWN SW
IJ2
B
R
W
G
NE
G1
G2
G-
D 4
DISTRIBUTOR
W- B
E28
BR
E 8
ELECTRONICALLY CONTROLLED
TRANSMISSION PATTERN
SELECT SW
NORMAL
MANUAL
13
1H
1
1J
IE

AND A/T INDICATOR (2JZ-GE)

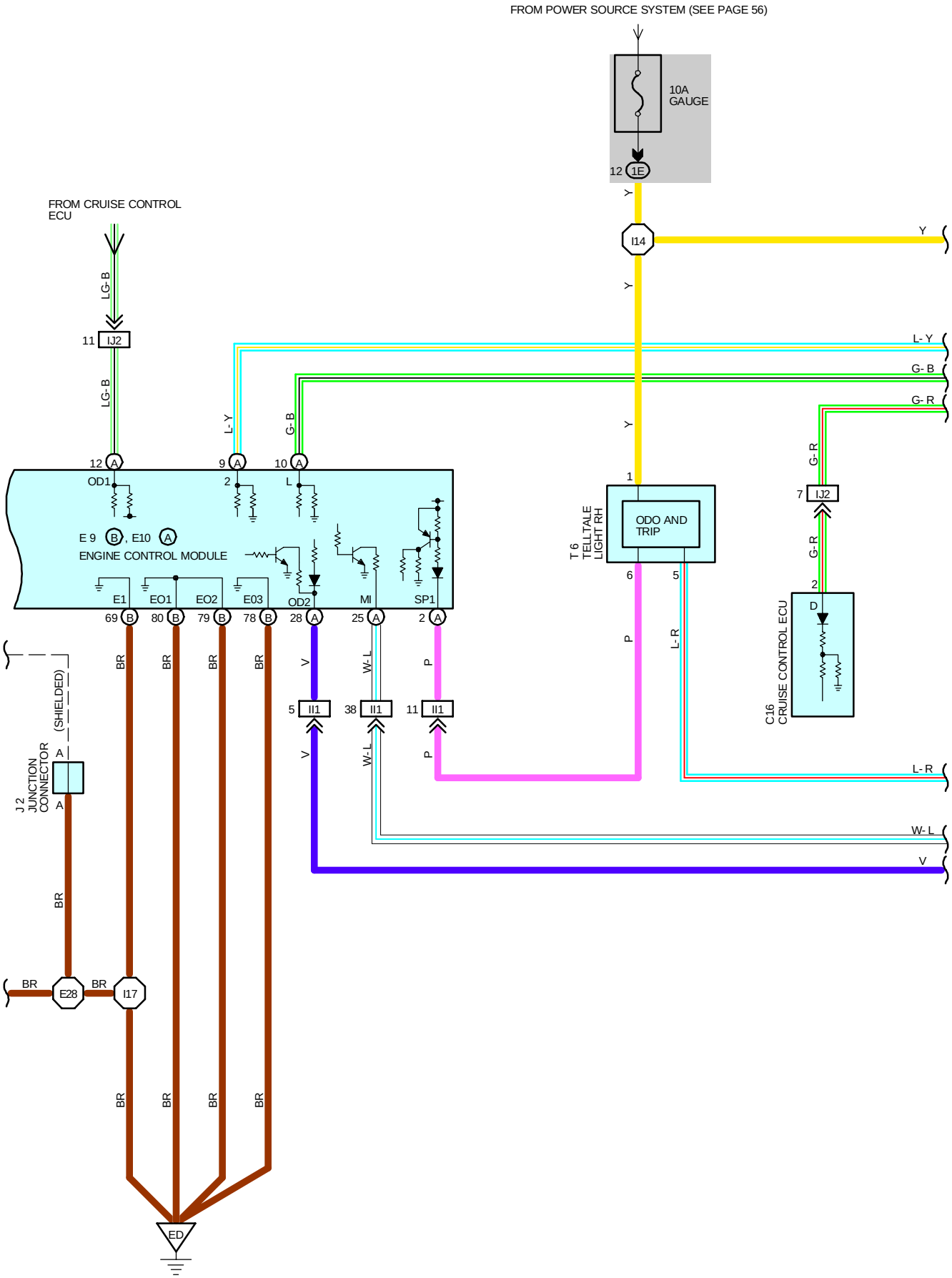

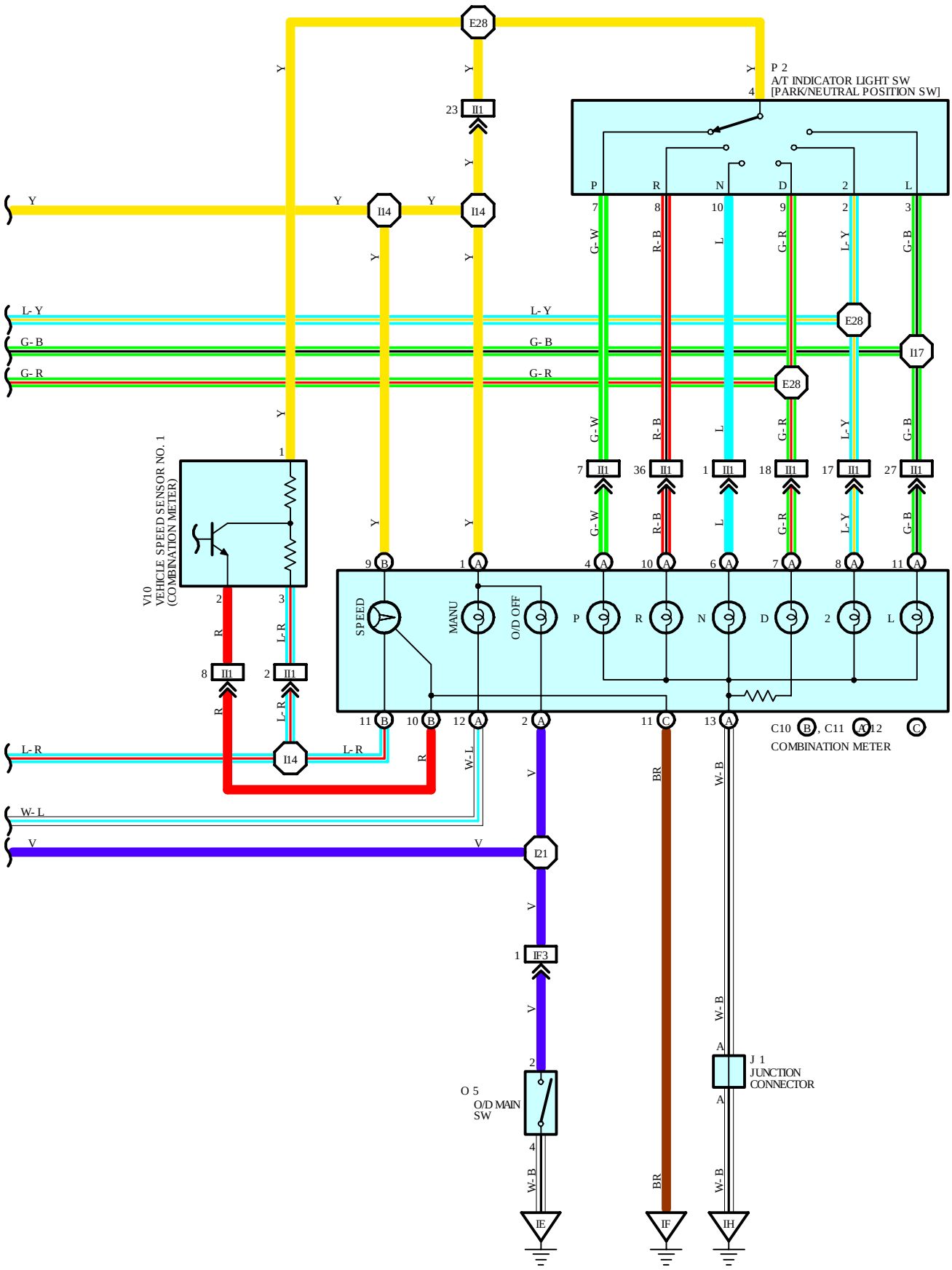
E28
23 I11
P 2
A/T INDICATOR LIGHT SW
[PARK/NEUTRAL POSITION SW]
4
P R N D 2 L
I14
I17
L- Y
G- B
G- R
V10
VEHICLE SPEED SENSOR NO. 1
(COMBINATION METER)
SPEED
MANU
O/D OFF
C10 (B), C11 (A), 12 (C)
COMBINATION METER
W- L
V
I21
IF3
O 5
O/D MAIN
SW
J 1
JUNCTION
CONNECTOR
W- B
BR
IE
IF
IH

SYSTEM OUTLINE

THIS SYSTEM ELECTRICALLY CONTROLS THE LINE PRESSURE, THROTTLE PRESSURE, LOCK-UP PRESSURE AND ACCUMULATOR PRESSURE ETC. THROUGH THE SOLENOID VALVE. THE ELECTRONICALLY CONTROLLED TRANSMISSION IS A SYSTEM WHICH PRECISELY CONTROLS GEAR SHIFT TIMING AND LOCK-UP TIMING IN RESPONSE TO THE VEHICLE'S DRIVING CONDITIONS AND THE ENGINE OPERATING CONDITIONS DETECTED BY VARIOUS SENSORS, MAKING SMOOTH DRIVING POSSIBLE BY SHIFT SELECTION FOR EACH GEAR WHICH IS THE MOST APPROPRIATE TO THE DRIVING CONDITIONS AT THAT TIME, AND CONTROLS THE ENGINE TORQUE DURING SHIFTING TO ACHIEVE OPTIMUM SHIFT FEELING.

1. GEAR SHIFT OPERATION

WHEN DRIVING, THE ENGINE WARM UP CONDITION IS INPUT AS A SIGNAL TO **TERMINAL (B) 44** OF THE ENGINE CONTROL MODULE FROM THE ENGINE COOLANT TEMP. SENSOR AND THE VEHICLE SPEED SIGNAL FROM VEHICLE SPEED SENSOR NO. 2 IS INPUT **TERMINAL (B) 23** OF THE ENGINE CONTROL MODULE**.** AT THE SAME TIME, THE THROTTLE VALVE OPENING SIGNAL FROM THE THROTTLE POSITION SENSOR IS INPUT TO **TERMINAL (B) 43** OF THE ENGINE CONTROL MODULE AS THROTTLE ANGLE SIGNAL.

BASED ON THESE SIGNALS, THE ENGINE CONTROL MODULE SELECTS THE BEST SHIFT POSITION FOR DRIVING CONDITIONS AND SENDS CURRENT TO THE ELECTRONICALLY CONTROLLED TRANSMISSION SOLENOIDS.

WHEN SHIFTING TO 1ST SPEED, THE CURRENT FLOWS FROM **TERMINAL (B) 10** OF THE ENGINE CONTROL MODULE ➔ **TERMINAL 1** OF THE ELECTRONICALLY CONTROLLED TRANSMISSION SOLENOID **.** ➔ **GROUND** AND CONTINUITY TO NO. 1 SOLENOID CAUSES THE SHIFT (NO. 2 SOLENOID DOES NOT HAVE CONTINUITY AT THIS TIME.)

FOR 2ND SPEED, THE CURRENT FLOWS SIMULTANEOUSLY FROM **TERMINAL (B) 9** OF THE ENGINE CONTROL MODULE ➔ **TERMINAL 2** OF ELECTRONICALLY CONTROLLED TRANSMISSION SOLENOID ➔ **GROUND,** AND FROM **TERMINAL (B) 10** OF THE ENGINE CONTROL MODULE ➔ **TERMINAL 1** OF THE ELECTRONICALLY CONTROLLED TRANSMISSION SOLENOID ➔ **GROUND,** AND CONTINUITY TO NO. 1 AND NO. 2 SOLENOIDS CAUSES THE SHIFT.

FOR 3RD SPEED, THERE IS NO CONTINUITY TO NO. 1 SOLENOID, ONLY TO NO. 2 SOLENOID, CAUSING THE SHIFT.

SHIFTING INTO THE 4TH SPEED (OVERDRIVE) OCCURS WHEN NO CURRENT FLOWS TO NO. 1 AND NO. 2 SOLENOIDS.

2. LOCK-UP OPERATION

WHEN THE ENGINE CONTROL MODULE JUDGES FROM EACH SIGNAL THAT LOCK-UP OPERATION CONDITIONS HAVE BEEN MET, THE CURRENT FLOWS FROM **TERMINAL (B) 8** OF THE ENGINE CONTROL MODULE ➔ **TERMINAL 3** OF THE ELECTRONICALLY CONTROLLED TRANSMISSION SOLENOID ➔ **GROUND**, CAUSING CONTINUITY TO THE LOCK-UP SOLENOID AND CAUSING LOCK-UP OPERATION.

3. STOP LIGHT SW CIRCUIT

IF THE BRAKE PEDAL IS DEPRESSED (STOP LIGHT SW ON) WHEN DRIVING IN LOCK-UP CONDITION, A SIGNAL IS INPUT TO **TERMINAL(A) 4** OF THE ENGINE CONTROL MODULE. THE ENGINE CONTROL MODULE OPERATES AND CUTS THE CURRENT TO THE SOLENOID TO RELEASE LOCK-UP.

4. OVERDRIVE CIRCUIT

* O/D MAIN SW ON
  WHEN THE O/D MAIN SW IS TURNED ON (SW POINT IS OPEN), A SIGNAL IS INPUT TO **TERMINAL (A) 28** OF THE ENGINE CONTROL MODULE AND THE ELECTRONICALLY CONTROLLED TRANSMISSION CAUSES SHIFT TO OVERRIDE WHEN THE CONDITIONS FOR OVERDRIVE ARE MET.
* O/D MAIN SW OFF
  WHEN THE O/D MAIN SW IS TURNED OFF (SW POINT IS CLOSED). THE CURRENT FLOWING THROUGHTHE O/D OFF INDICATOR LIGHT FLOWS TO **GROUND** BY WAY OF THE O/D MAIN SW AND CAUSES THE O/D OFF INDICATOR LIGHT TO LIGHT UP. AT THE SAME TIME, A SIGNAL IS INPUT TO **TERMINAL (A) 28** OF THE ENGINE CONTROL MODULE AND THE ELECTRONICALLY CONTROLLED TRANSMISSION PREVENTS SHIFT INTO OVERDRIVE.

5. ELECTRONICALLY CONTROLLED TRANSMISSION PATTERN SELECT SW CIRCUIT

WHEN THE ELECTRONICALLY CONTROLLED TRANSMISSION PATTERN SELECT SW IS SWITCHED FROM **NORMAL** TO **MANUAL**, A SIGNAL IS INPUT TO **TERMINAL (A) 18** OF THE ENGINE CONTROL MODULE. INPUT OF THIS SIGNAL CAUSES CURRENT TO FLOW FROM THE **GAUGE** FUSE TO **TERMINAL (A) 1** OF THE COMBINATION METER ➔ **TERMINAL (A) 12** ➔ **TERMINAL (A) 25** OF THE ENGINE CONTROL MODULE ➔ **GROUND**, LIGHTING UP THE INDICATOR LIGHT. IF THE A/T SHIFT LEVER IS THEN SHIFTED TO "2" POSITION, THE ENGINE CONTROL MODULE ENABLES THE VEHICLE TO START OFF WITH THE TRANSMISSION IN 2ND GEAR, THUS PERMITTING EASING STARTING OFF AND DRIVING ON SLIPPERY ROADS.

6. CRUISE CONTROL

WHEN CRUISE CONTROL OPERATION IS SELECTED A SIGNAL IS INPUT TO **TERMINAL (A) 12** OF THE ENGINE CONTROL MODULE FROM CRUISE CONTROL ECU. AS A RESULT, THE ENGINE CONTROL MODULE OPERATES AND CONTROLS OVERDRIVE, LOCK-UP AND SO ON FOR SMOOTH DRIVING.

SERVICE HINTS

E2 ELECTRONICALLY CONTROLLED TRANSMISSION SOLENOID

1, 2, 3-GROUND **:** EACH **11-15** Ω

E 3 ENGINE COOLANT TEMP. SENSOR

4-7 K– μ**0•C 32•F)**
2-3 K– μ**20•C 68•F)**
0-9.3 K– μ**40•C 104•F)**
0-4.7 K– μ**60•C 140•F)**
0-2.4 K– μ**80•C 176•F)**

E 9 (B), E10 (A) ENGINE CONTROL MODULE

BATT-E1:AL WAYS **9-14** VOLTS
IGSW-E1: **9-14** VOLTS WITH THE IGNITION SW ON
+B-E1:**9-14** VOLTS WITH THE IGNITION SW ON
IDL1-E1:**0-1.5** VOLTS WITH THE IGNITION SW ON AND THE THROTTLE VALVE FULLY CLOSED
:9-14 VOLTS WITH THE IGNITION SW ON AND THE THROTTLE VALVE FULLY OPEN
VTA1-E1: **0.3-0.8** VOLTS WITH THE IGNITION SW ON AND THE THROTTLE VALVE FULLY CLOSED
3.2-4.9 VOLTS WITH THE IGNITION SW ON AND THE THROTTLE VALVE FULLY OPEN
STA-E1: **6-14** VOLTS WITH THE ENGINE CRANKING
M-REL-E1: **9-14** VOLTS WITH THE IGNITION SW ON
VCC-E1:**4.5-5.5** VOLTS WITH THE IGNITION SW ON
L-E1: **7.5-14** VOLTS WITH THE SHIFT LEVER AT "**L**" POSITION
2-E1: **7.5-14** VOLTS WITH THE SHIFT LEVER AT **"2**" POSITION

V11 VEHICLE SPEED SENSOR NO. 2 (ELCTRONICALLY CONTROLLED TRANSMISSION)

1-2:APPROX. **620**–

E 8 ELECTRONICALLY CONTROLLED TRANSMISSION PATTERN SELECT SW

4-3 :CLOSED WITH THE ELECTRONICALLY CONTROLLED TRANSMISSION PATTERN SELECT SW AT **MANUAL** POSITION

: PARTS LOCATION

CODE	SEE PAGE	CODE	SEE PAGE	CODE	SEE PAGE
A4	26(2JZ-GE)	E 3	26(2JZ-GE)	0 5	29
C10 B	28	E 8	29	P 2	27(2JZ-GE)
C11 A	28	E 9 B	29	P 3	27(2JZ-GE)
C12 C	28	E10 A	29	S11	29
C16	28	I19	29	T 2	27(2JZ-GE)
D 1	26(2JZ-GE)	J 1	29	T 6	29
D 4	26	J 2	29	V10	27(2JZ-GE)
E 1	26(2JZ-GE)	K 4	29	V11	27(2JZ-GE)
E 2	26(2JZ-GE)	M 1	29		

: RELAY BLOCKS

CODE	SEE PAGE	RELAY BLOCKS (RELAY BLOCK LOCATION)
2	22	R/B NO. 2 (ENGINE COMPARTMENT LEFT)

: JUNCTION BLOCK AND WIRE HARNESS CONNECTOR

CODE	SEE PAGE	JUNCTION BLOCK AND WIRE HARNESS (CONNECTOR LOCATION)
1B	20	ENGINE ROOM MAIN WIRE AND J/B NO. 1 (LEFT KICK PANEL)
1E	20	INSTRUMENT PANEL WIRE AND J/B NO. 1 (LEFT KICK PANEL)
1H	20	COWL WIRE AND J/B NO. 1 (LEFT KICK PANEL)
1I		
1J		
1K		
2A	22	BATTERY AND J/B NO. 2 (ENGINE COMPARTMENT LEFT)

: CONNECTOR JOINING WIRE HARNESS AND WIRE HARNESS

CODE	SEE PAGE	JOINING WIRE HARNESS AND WIRE HARNESS (CONNECTOR LOCATION)
EA1	34(2JZ-GE)	ENGINE WIRE AND ENGINE ROOM MAIN WIRE (NEAR THE R/B NO. 2)
EA3	34	
IB1	36	ENGINE ROOM MAIN WIRE AND COWL WIRE (LEFT KICK PANEL)
IF3	36	INSTRUMENT PANEL WIRE AND COWL WIRE (RIGHT KICK PANEL)
II1	38	ENGINE WIRE AND INSTRUMENT PANEL WIRE (RIGHT KICK PANEL)
IJ1	38	ENGINE WIRE AND COWL WIRE (RIGHT KICK PANEL)
IJ2		

AND A/T INDICATOR (2JZ-GE)

: GROUND POINTS

CODE	SEE PAGE	GROUND POINTS LOCATION
EB	34(2JZ-GE)	FRONT SIDE OF LEFT FENDER
ED	34(2JZ-GE)	REAR SIDE OF INTAKE MANIFOLD
IE	36	LEFT KICK PANEL
IF		
IH	36	RIGHT KICK PANEL

: SPLICE POINTS

CODE	SEE PAGE	WIRE HARNESS WITH SPLICE POINTS	CODE	SEE PAGE	WIRE HARNESS WITH SPLICE POINTS
E20	34	ENGINE WIRE	I14	38	INSTRUMENT PANEL WIRE
E23			I17	38	ENGINE WIRE
E26			I21	38	INSTRUMENT PANEL WIRE
E28					

A 5 GRAY

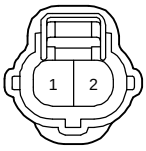

C10 (B) BLUE

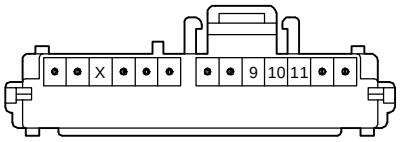

C11 (A) BROWN

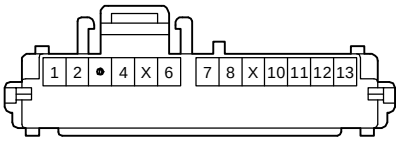

C12 (C)

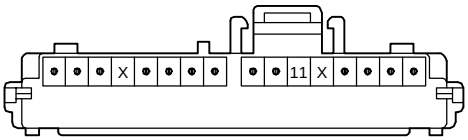

C16 GREEN

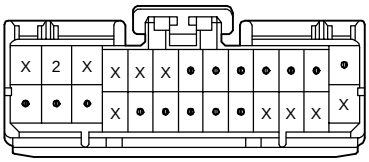

D 1 BLACK

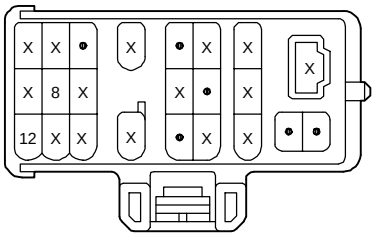

D 4 BLACK

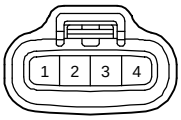

E 1 DARK GRAY



E 2 BLACK

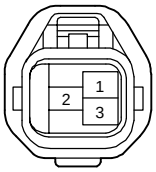

E 3 GREEN



E 8

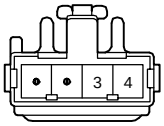

E 9 (B) DARK GRAY

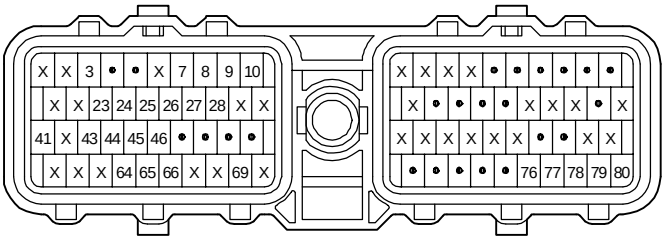

E10 (A) DARK GRAY

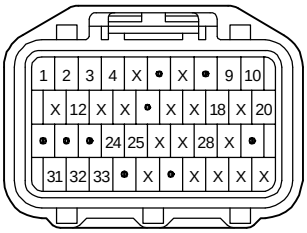

I19

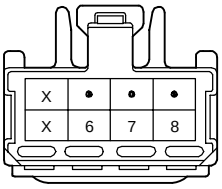

J 1

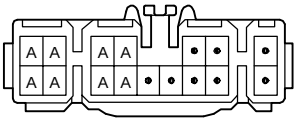

(HINT : SEE PAGE 7)

J 2

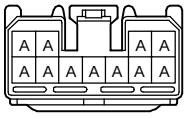

(HINT : SEE PAGE 7)

K 4 BLACK

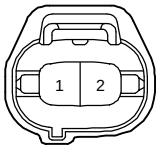

M 1 BLACK

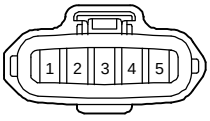

O 5 BLUE

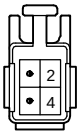

P 2 GRAY

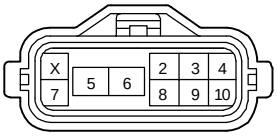

P 3 DARK GRAY



S11 BLUE

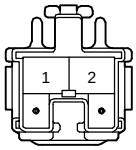

T 2 BLACK

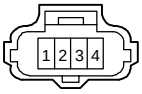

T 6

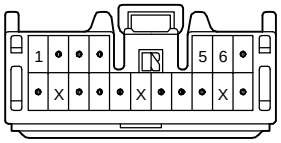

V10 BLACK



V11 BLACK

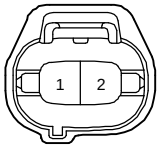

A 6 (A) BLACK

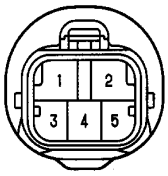

A 7 (B) GRAY



A 8 (A) GRAY



A 9 (B) GRAY

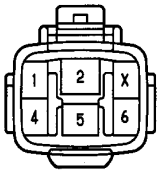

A10, A11 GRAY



A18 (B)

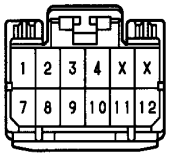

A19 (A)

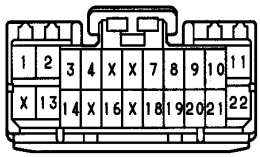

A31 GRAY

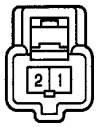

A32 GRAY



D 1 BLACK

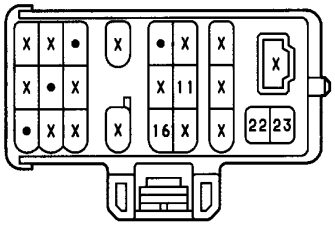

D 5 DARK GRAY

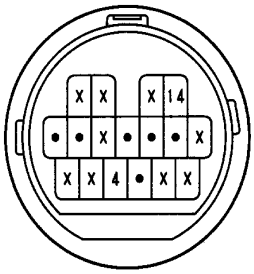

S11 BLUE

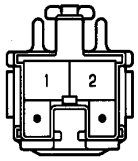

T 5

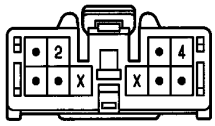

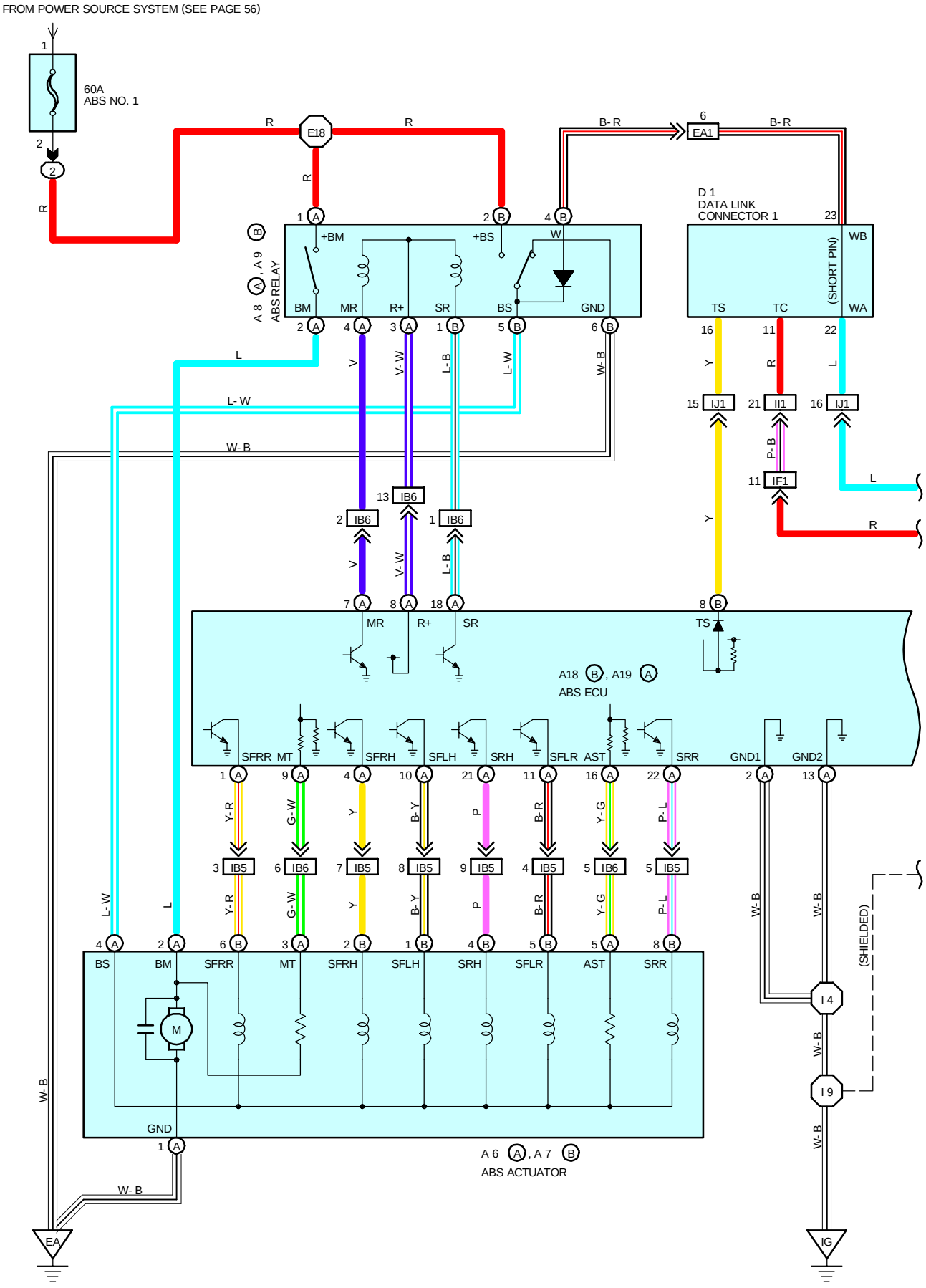
FROM POWER SOURCE SYSTEM (SEE PAGE 56)
60A
ABS NO. 1
E18
EA1
D 1
DATA LINK
CONNECTOR 1
(SHORT PIN)
A 8 , A 9
ABS RELAY
+BM
+BS
BM
MR
R+
SR
BS
GND
TS
TC
WB
WA
IJ1
II1
IF1
IB6
IB5
A18 , A19
ABS ECU
SFRR
MT
SFRH
SFLH
SRH
SFLR
AST
SRR
GND1
GND2
A 6 , A 7
ABS ACTUATOR
M
I 4
I 9
(SHIELDED)
EA
IG

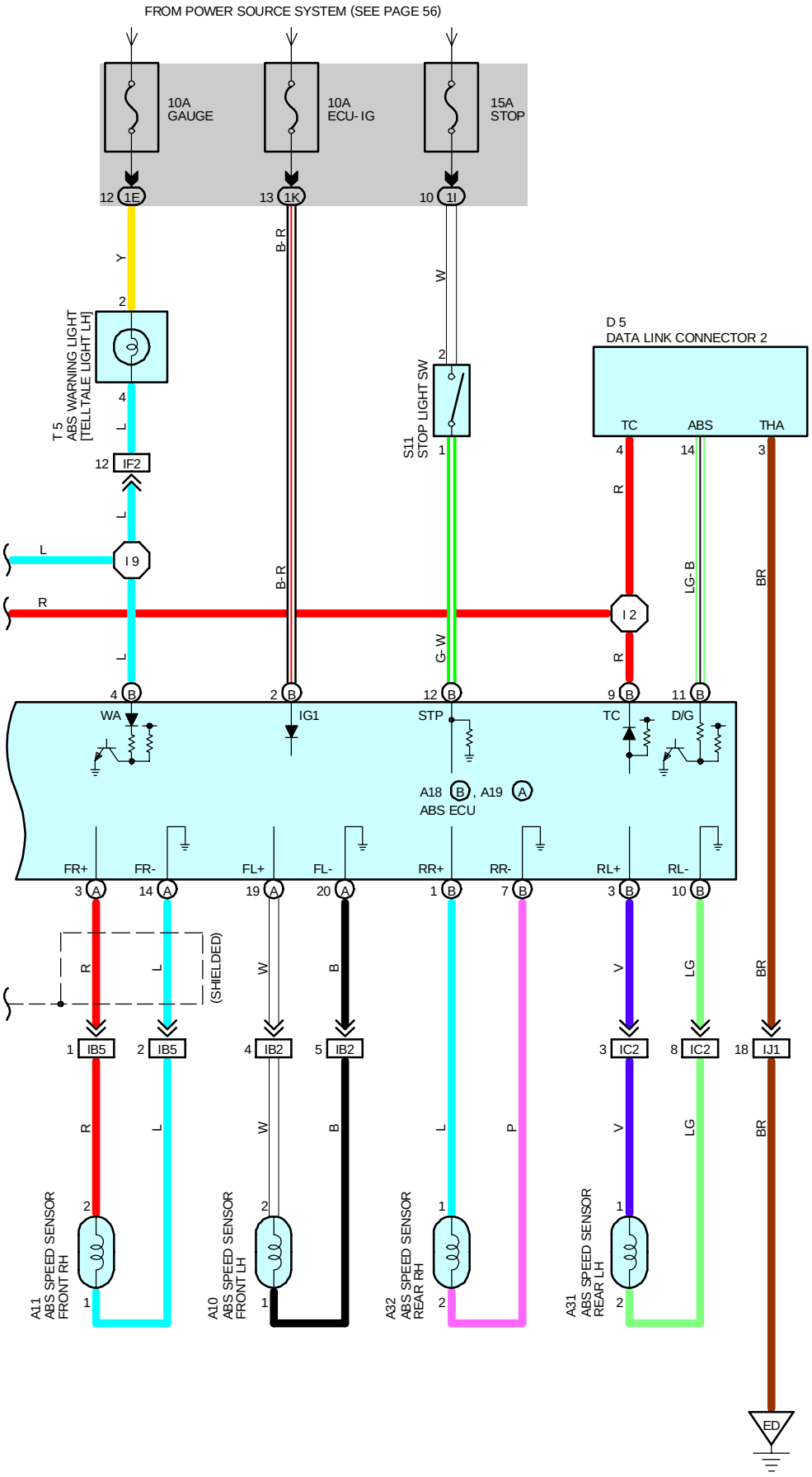
FROM POWER SOURCE SYSTEM (SEE PAGE 56)
10A GAUGE
10A ECU-IG
15A STOP
12 1E
13 1K
10 1I
Y
B-R
W
2
T 5
ABS WARNING LIGHT [TELLTALE LIGHT LH]
4
L
12 IF2
S11
STOP LIGHT SW
1
D 5
DATA LINK CONNECTOR 2
TC
ABS
THA
4
14
3
R
LG-B
BR
I 9
I 2
G-W
4 B
2 B
12 B
9 B
11 B
WA
IG1
STP
TC
D/G
A18 B , A19 A
ABS ECU
FR+
FR-
FL+
FL-
RR+
RR-
RL+
RL-
3 A
14 A
19 A
20 A
1 B
7 B
3 B
10 B
(SHIELDED)
V
LG
1 IB5
2 IB5
4 IB2
5 IB2
3 IC2
8 IC2
18 IJ1
A11
ABS SPEED SENSOR FRONT RH
A10
ABS SPEED SENSOR FRONT LH
A32
ABS SPEED SENSOR REAR RH
A31
ABS SPEED SENSOR REAR LH
ED

SYSTEM OUTLINE

THIS SYSTEM CONTROLS THE RESPECTIVE BRAKE FLUID PRESSURES ACTING ON THE DISC BRAKE CYLINDERS OF THE RIGHT FRONT WHEEL, LEFT FRONT WHEEL AND REAR WHEELS WHEN THE BRAKES ARE APPLIED IN A PANIC STOP SO THAT THE WHEELS DO NOT LOCK. THIS RESULTS IN IMPROVED DIRECTIONAL STABILITY AND STEERABILITY DURING PANIC BRAKING.

1. INPUT SIGNALS

(1) SPEED SENSOR SIGNAL
THE SPEED OF THE WHEELS IS DETECTED AND INPUT TO **TERMINALS FL+, FR+, RL+** AND **RR+** OF THE ABS ECU.

(2) STOP LIGHT SW SIGNAL
A SIGNAL IS INPUT TO **TERMINAL STP** OF THE ABS ECU WHEN THE BRAKE PEDAL IS DEPRESSED.

2. SYSTEM OPERATION

DURING SUDDEN BRAKING, THE ABS ECU WHICH HAS SIGNALS INPUT FROM EACH SENSOR CONTROLS THE CURRENT FLOWING TO THE SOLENOID INSIDE THE ACTUATOR AND LETS THE HYDRAULIC PRESSURE ACTING ON EACH WHEEL CYLINDER ESCAPE TO THE RESERVOIR. THE PUMP INSIDE THE ACTUATOR IS ALSO OPERATING AT THIS TIME AND IT RETURNS THE BRAKE FLUID FROM THE RESERVOIR TO THE MASTER CYLINDER, THUS PREVENTING LOCKING OF THE VEHICLE WHEELS.

IF THE ECU JUDGES THAT THE HYDRAULIC PRESSURE ACTING ON THE WHEEL CYLINDER IS INSUFFICIENT, THE CURRENT ACTING ON SOLENOID IS CONTROLLED AND THE HYDRAULIC PRESSURE IS INCREASED.

HOLDING OF THE HYDRAULIC PRESSURE IS ALSO CONTROLLED BY THE ECU, BY THE SAME METHOD AS ABOVE, BY REPEATED PRESSURE REDUCTION, HOLDING AND INCREASE ARE REPEATED TO MAINTAIN VEHICLE STABILITY AND TO IMPROVE STEERABILITY DURING SUDDEN BRAKING.

SERVICE HINTS

A 6 (A), A 7 (B) ABS ACTUATOR

(A) 1-GROUND : ALWAYS CONTINUITY
(B) 5-(A) 4:33
(B) 1,**(B)** 2,**(B)** 4,**(A)** 4:APPROX. **8.8**
(B) 5,**(B)** 6,**(B)** 8,**(A)** 4:APPROX. **4.3**

A10, A11 ABS SPEED SENSOR FRONT LH, RH

1-2:1.4-1.8 K **(20•C, 68•F)**

A31, A32 ABS SPEED SENSOR REAR LH, RH

1-2:0.9-1.3 K **(20•C, 68•F)**

A18, (B), A19(A) ABS ECU

(B) 2-GROUND **:10-14** VOLTS WITH THE IGNITION SW ON
(B)12-GROUND **:10-14** VOLTS WITH THE STOP LIGHT SW ON (BRAKE PEDAL DEPRESSED)
(A) 2, **(A)** 13-GROUND **:ALWAYS CONTINUITY**
(A) 1, (A) 4, (A) 10, (A) 11, (A) 21, (A) 22-GROUND**:10-14** VOLTS WITH THE IGNITION SW ON

S11 STOP LIGHT SW

1-2:CLOSED WITH THE BRAKE PEDAL DEPRESSED

: PARTS LOCATION

CODE		SEE PAGE	CODE		SEE PAGE	CODE	SEE PAGE
A 6	A	26(2JZ-GE)	A11		26(2JZ-GE)	D 1	26(2JZ-GE)
A 7	B	26(2JZ-GE)	A18	B	28	D 5	28
A 8	A	26	A19	A	28	S11	29
A 9	B	26	A31		30	T 5	29
A10		26(2JZ-GE)	A32		30		

: RELAY BLOCKS

CODE	SEE PAGE	RELAY BLOCKS (RELAY BLOCK LOCATION)
2	22	R/B NO. 2 (ENGINE COMPARTMENT LEFT)

: JUNCTION BLOCK AND WIRE HARNESS CONNECTOR

CODE	SEE PAGE	JUNCTION BLOCK AND HARNESS AND WIRE HARNESS (CONNECTOR LOCATION)
1E	20	INSTRUMENT PANEL WIRE AND J/B NO. 1 (LEFT KICK PANEL)
1I	20	COWL WIRE AND J/B NO. 1 (LEFT KICK PANEL)
1K		

: CONNECTOR JOINING WIRE HARNESS AND WIRE HARNESS

CODE	SEE PAGE	JOINING WIRE HARNESS AND WIRE HARNESS (CONNECTOR LOCATION)
EA1	34(2JZ-GE)	ENGINE WIRE AND ENGINE ROOM MAIN WIRE (NEAR THE R/B NO. 2)
IB2	36	ENGINE ROOM MAIN WIRE AND COWL WIRE (LEFT KICK PANEL)
IB5	36	ENGINE ROOM MAIN WIRE AND COWL WIRE (RIGHT KICK PANEL)
IB6		
IC2	36	FLOOR NO. 2 WIRE AND COWL WIRE (LEFT KICK PANEL))
IF1	36	INSTRUMENT PANEL WIRE AND COWL WIRE (INSTRUMENT PANEL REINFORCEMENT LH)
IF2		
II1	38	ENGINE WIRE AND INSTRUMENT PANEL WIRE (RIGHT KICK PANEL)
IJ1	38	ENGINE WIRE AND COWL WIRE (RIGHT KICK PANEL)

: GROUND POINTS

CODE	SEE PAGE	GROUND POINTS LOCATION
EA	34(2JZ-GE)	FRONT SIDE OF RIGHT FENDER
ED	34(2JZ-GE)	REAR SIDE OF INTAKE FENDER
IG	36	RIGHT KICK PANEL

: SPLICE POINTS

CODE	SEE PAGE	WIRE HARNESS WITH SPLICE POINTS	CODE	SEE PAGE	WIRE HARNESS WITH SPLICE POINTS
E18	34	ENGINE ROOM MAIN WIRE	I 4	38	COWL WIRE
I 2	38	COWL WIRE	I 9		

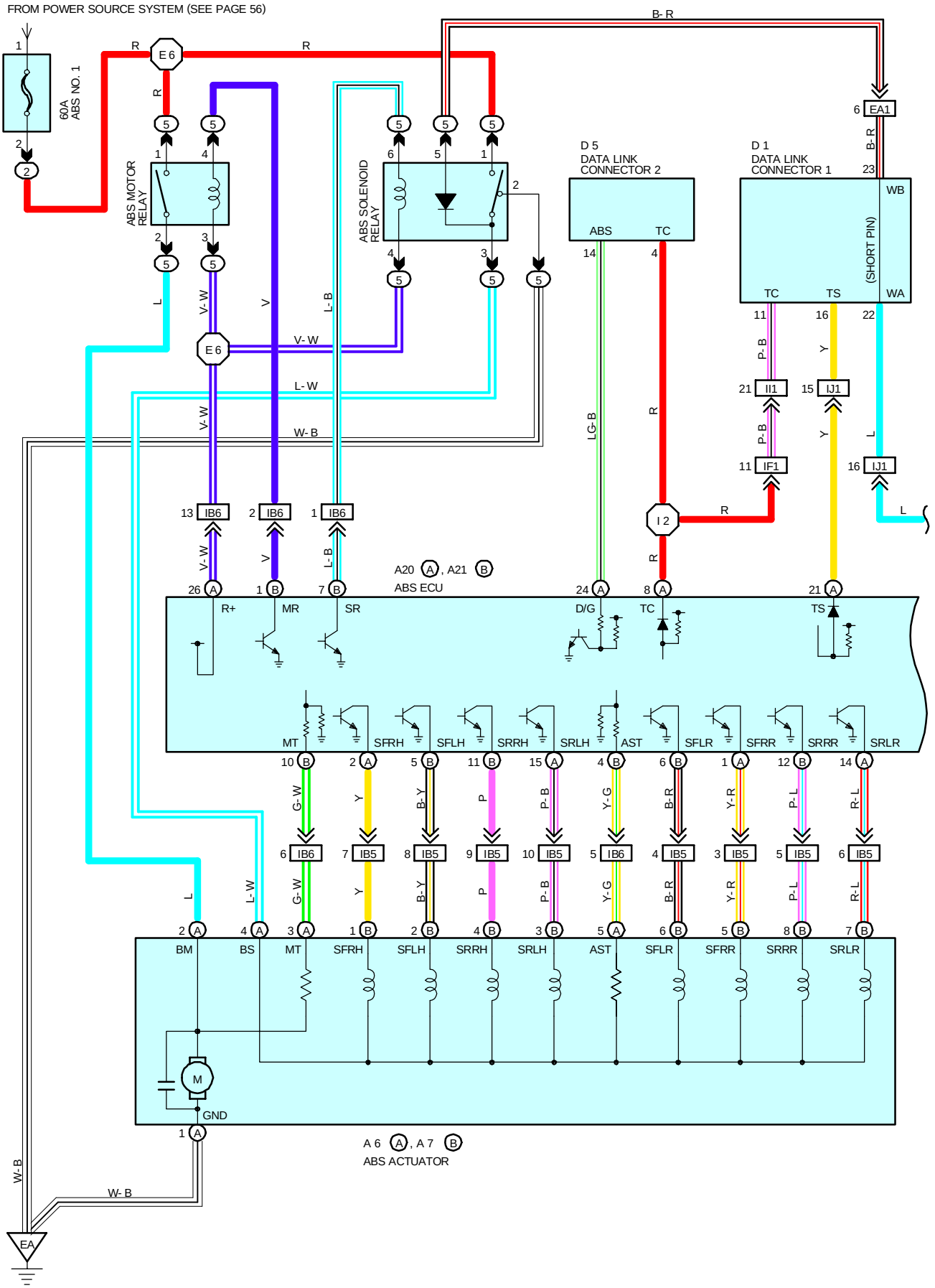
FROM POWER SOURCE SYSTEM (SEE PAGE 56)
60A ABS NO. 1
ABS MOTOR RELAY
ABS SOLENOID RELAY
D 5 DATA LINK CONNECTOR 2
D 1 DATA LINK CONNECTOR 1
(SHORT PIN)
A20 A, A21 B
ABS ECU
R+
MR
SR
D/G
TC
TS
MT
SFRH
SFLH
SRRH
SRLH
AST
SFLR
SFRR
SRRR
SRLR
BM
BS
M
GND
A 6 A, A 7 B
ABS ACTUATOR
EA

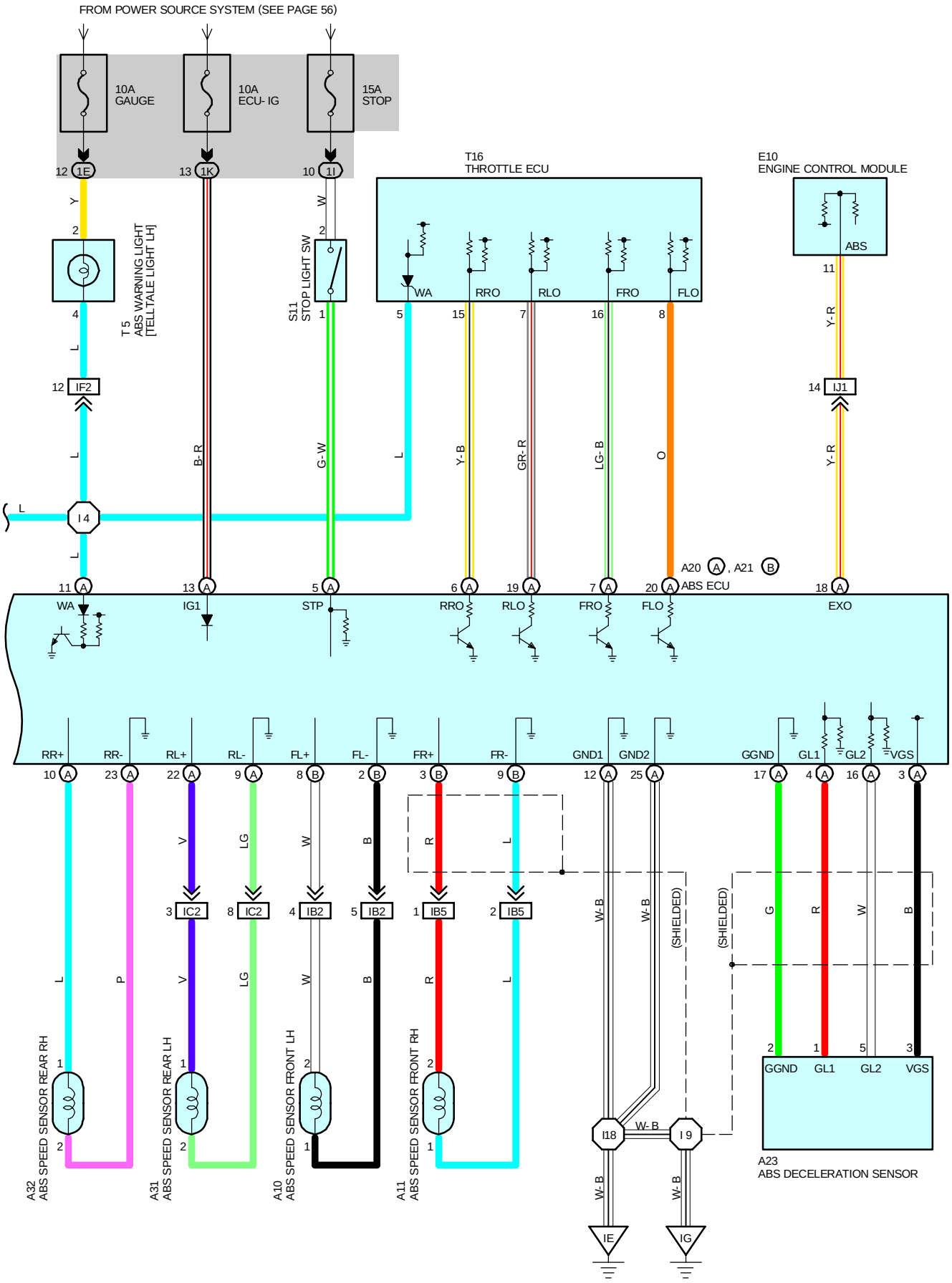
FROM POWER SOURCE SYSTEM (SEE PAGE 56)
10A GAUGE
10A ECU- IG
15A STOP
12 1E
13 1K
10 1I
T16 THROTTLE ECU
E10 ENGINE CONTROL MODULE
ABS
T 5 ABS WARNING LIGHT [TELLTALE LIGHT LH]
S11 STOP LIGHT SW
WA
RRO
RLO
FRO
FLO
12 IF2
14 IJ1
I 4
A20 A , A21 B
ABS ECU
11 WA
13 IG1
5 STP
6 RRO
19 RLO
7 FRO
20 FLO
18 EXO
RR+ RR- RL+ RL- FL+ FL- FR+ FR- GND1 GND2 GGND GL1 GL2 VGS
IC2
IB2
IB5
(SHIELDED)
I18
I 9
IE
IG
A32 ABS SPEED SENSOR REAR RH
A31 ABS SPEED SENSOR REAR LH
A10 ABS SPEED SENSOR FRONT LH
A11 ABS SPEED SENSOR FRONT RH
A23 ABS DECELERATION SENSOR

SYSTEM OUTLINE

THIS SYSTEM CONTROLS THE RESPECTIVE BRAKE FLUID PRESSURES ACTING ON THE DISC BRAKE CYLINDERS OF THE RIGHT FRONT WHEEL, LEFT FRONT WHEEL, RIGHT REAR WHEEL AND LEFT REAR WHEEL WHEN THE BRAKES ARE APPLIED IN A PANIC STOP SO THAT THE WHEELS DO NOT LOCK.
THIS RESULTS IN IMPROVED DIRECTIONALLY STABILITY AND STEERABILITY DURING PANIC BRAKING.

1. INPUT SIGNALS

(3) SPEED SENSOR SIGNAL
THE SPEED OF THE WHEELS IS DETECTED AND INPUT TO **TERMINALS FL+, FR+, RL+** AND **RR+** OF THE ABS ECU.

(4) STOP LIGHT SW SIGNAL
A SIGNAL IS INPUT TO **TERMINAL STP** OF THE ABS ECU WHEN THE BRAKE PEDAL IS DEPRESSED.

(5) DECELERATION SENSOR SIGNAL
LONGITUDINAL AND LATERAL ACCELERATION IS DETECTED AND INPUT TO THE ABS ECU.

2. SYSTEM OPERATION

DURING SUDDEN BRAKING, THE ABS ECU WHICH HAS SIGNALS INPUT FROM EACH SENSOR CONTROLS THE CURRENT FLOWING TO THE SOLENOID INSIDE THE ACTUATOR AND LETS THE HYDRAULIC PRESSURE ACTING ON EACH WHEEL CYLINDER ESCAPE TO THE RESERVOIR. THE PUMP INSIDE THE ACTUATOR IS ALSO OPERATING AT THIS TIME AND IT RETURNS THE BRAKE FLUID FROM THE RESERVOIR TO THE MASTER CYLINDER, THUS PREVENTING LOCKING OF THE VEHICLE WHEELS.
IF THE ECU JUDGES THAT THE HYDRAULIC PRESSURE ACTING ON THE WHEEL CYLINDER IS INSUFFICIENT, THE CURRENT ACTING ON SOLENOID IS CONTROLLED AND THE HYDRAULIC PRESSURE IS INCREASED.
HOLDING OF THE HYDRAULIC PRESSURE IS ALSO CONTROLLED BY THE ECU, BY THE SAME METHOD AS ABOVE, BY REPEATED PRESSURE REDUCTION, HOLDING AND INCREASE ARE REPEATED TO MAINTAIN VEHICLE STABILITY AND TO IMPROVE STEERABILITY DURING SUDDEN BRAKING.

SERVICE HINTS

A20 (A), A21 (B) ABS ECU

(A) 13-GROUND::**10-14** VOLTS WITH THE IGNITION SW AT ON POSITION
(A) 5-GROUND:**10-14** VOLTS WITH THE STOP LIGHT SW ON
(A) 12,**(A)** 25-GROUND:ALWAYS CONTINUITY

A 6 (A), A 7 (B) ABS ACTUATOR

(A) 1-GROUND:ALWAYS CONTINUITY
(A) 5-(A) **4.33** Ω
(B) 1, **(B)** 2, **(B)** 3, **(B)** 4- **(A)** 4,:APPROX. **8 8** Ω
(B) 5, **(B)** 6, **(B)** 7, **(B)** 8- **(A)** 4,:APPROX. **4.3** Ω

S11 STOP LIGHT SW

2-1:CLOSED WITH THE BRAKE PEDAL DEPRESSED

A10, A11 ABS SPEED SENSOR FRONT LH, RH

1-2:0.4-1.8 KΩ **(20•C, 68•F)**

A31, A32 ABS SPEED SENSOR REAR LH, RH

1-2:0.9-1.3 KΩ **(20•C, 68•F)**

: PARTS LOCATION

CODE		SEE PAGE	CODE		SEE PAGE	CODE	SEE PAGE
A 6	A	24(2JZ-GTE)	A21	B	28	D 5	28
A 7	B	24(2JZ-GTE)	A23		28	E10	29
A10		24(2JZ-GTE)	A31		30	S11	29
A11		24(2JZ-GTE)	A32		30	T 5	29
A20	A	28	D 1		24(2JZ-GTE)	T16	29

: RELAY BLOCKS

CODE	SEE PAGE	RELAY BLOCKS (RELAY BLOCK LOCATION)
2	22	R/B NO. 2 (ENGINE COMPARTMENT LEFT)
5	23	R/B NO. 5 (ENGINE COMPARTMENT RIGHT)

: JUNCTION BLOCK AND WIRE HARNESS CONNECTOR

CODE	SEE PAGE	JUNCTION BLOCK AND WIRE HARNESS (CONNECTOR LOCATION)
1E	20	INSTRUMENT PANEL WIRE AND J/B NO. 1 (LEFT KICK PANEL)
1H	20	COWL WIRE AND J/B NO. 1 (LEFT KICK PANEL)
1I	20	COWL WIRE AND NO. 1 (LEFT KICK PANEL
1K	20	COWL WIRE AND J/B NO. 1 (LEFT KICK PANEL)

: CONNECTOR JOINING WIRE HARNESS AND WIRE HARNESS

CODE	SEE PAGE	JOINING WIRE HARNESS AND WIRE HARNESS (CONNECTOR LOCATION)
EA1	32(2JZ-GTE)	ENGINE WIRE AND ENGINE ROOM MAIN WIRE (NEAR THE R/B NO. 2)
IB2	36	ENGINE ROOM MAIN WIRE AND COWL WIRE (LEFT KICK PANEL)
IB5	36	ENGINE ROOM MAIN WIRE AND COWL WIRE (RIGHT KICK PANEL)
IB6		
IC2	36	FLOOR NO. 2 WIRE AND COWL WIRE (LEFT KICK PANEL)
IF1	36	INSTRUMENT PANEL WIRE AND COWL WIRE (INSTRUMENT PANEL REINFORCEMENT LH)
IF2		
II1	38	ENGINE WIRE AND INSTRUMENT PANEL WIRE (RIGHT KICK PANEL)
IJ1	38	ENGINE WIRE AND COWL WIRE (RIGHT KICK PANEL)

: GROUND POINTS

CODE	SEE PAGE	GROUND POINTS LOCATION
IE	36	LEFT KICK PANEL
IG	36	RIGHT KICK PANEL

: SPLICE POINTS

CODE	SEE PAGE	WIRE HARNESS WITH SPLICE POINTS	CODE	SEE PAGE	WIRE HARNESS WITH SPLICE POINTS
I 2	38	COWL WIRE	I 9	38	COWL WIRE
I11			I18		

A 6 (A) BLACK

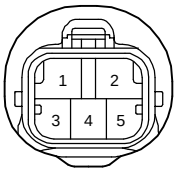

A 7 (B) GRAY

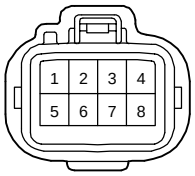

A10 GRAY



A11 GRAY



A20 (A)

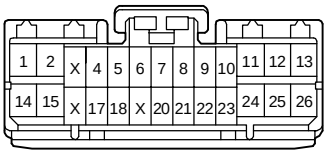

A21 (B)

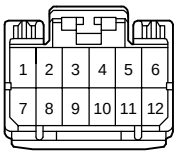

A23

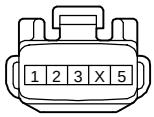

A31 GRAY

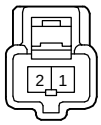

A32 GRAY

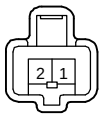

D 1 BLACK

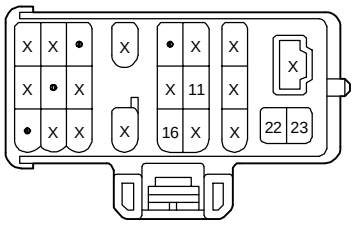
X X X

SYSTEM OUTLINE

TRACTION CONTROL IS THE SYSTEM TO REALIZE A FAVORABLE ACCELERATOR CONTROLABILITY BY MAKING THE ENGINE OUTPUT MOST APPROPRIATE FOR THE ACCELERATION UNDER EACH DRIVING CONDITION PROVIDED BY THE THROTTLE ECU.

(TRACTION OFF SW)

THIS IS THE SWITCH TO STOP THE OPERATION OF SLIP CONTROL. AFTER STARTING THE ENGINE, PRESSING THE SWITCH ONE TIME UNDER THE CONDITION THAT THE SNOW INDICATOR DOES NOT LIGHT ON, MAKES IT IN THE OPERATION STOP CONDITION (OFF), AND PRESSING IT ONE MORE TIME MAKES IT IN THE OPERATION WAITING CONDITION. IN ADDITION, RESTARTING AFTER THE ENGINE STOP MAKES IT IN THE OPERATION WAITING CONDITION WITHOUT CONCERNING THE TRACTION OFF SW.

(SNOW MODE SW)

THIS IS THE SWITCH TO FIX LOW μ LOADS CONTROL AT THE TIME OF DRIVING ON A SLIPPERY ROAD SUCH AS SNOWY ROAD. AFTER STARTING THE ENGINE, PRESSING THE SWITCH MAKES IT FIX AT LOW μ LOAD CONTROL AND SNOW INDICATOR LIGHT COMES ON. IN ADDITION, RESTARTING AFTER THE ENGINE STOP MAKES IT ALWAYS IN NORMAL CONDITION (AUTO MODE) WITHOUT CONCERNING THE SNOW MODE SW CONDITION. PRESSING THE SNOW MODE SW UNDER OPERATION PROHIBITION CONDITION OF THE TRACITION (TRAC OFF INDICATOR LIGHTS ON.) CANCELS THE OPERATION PROHIBITION OF THE TRACTION AND ALSO FIXES IT AT LOW μ LOAD CONTROL.

(TRAC OFF INDICATOR LIGHT)

THIS LIGHT COMES ON BY SELECTING THE OPERATION STOP CONDITION OF THE TRACTION CONTROL WITH TRACTION OFF SW AND ALERTS THE DRIVER TO BE IN OPERATION STOP CONDITION AND ALSO ALERTS THE DRIVER BY BLINKING IN CASE OF THE OCCURANCE OF THE SYSTEM MAULFUCTION.

SERVICE HINTS

T15 (A), T16 (B)THROTTLE ECU

WT-E1**: 0.3** VOLTS WITH THE IGNITION SW ON AND THE TRAC OFF INDICATOR LIGHT ON
9-14 VOLTS WITH THE IGNITION SW ON AND THE TRAC OFF INDICATOR LIGHT OFF
IND-E1 : **0.3** VOLTS WITH THE IGNITION SW ON AND SLIP INDICATOR LIGHT ON
: **9-14** VOLTS WITH THE IGNITION SW ON AND SLIP INDICATOR LIGHT OFF
CSW-E1: **0.3** VOLTS WITH THE IGNITION SW ON AND THE TRAC OFF SW HOLDED ON PUSHING
: **9-14** VOLTS WITH THE IGNITION SW ON AND THE TRAC OFF SW RELEASED
SIND-E1 **0.3** VOLTS WITH THE IGNITION SW ON AND THE SNOW INDICATOR LIGHT ON
9-14 VOLTS WITH THE IGNITION SW ON AND THE SNOW INDICATOR LIGHT OFF
SNOW-E1: **0.3** VOLTS WITH THE IGNITION SW ON AND THE SNOW MODE SW HELD ON PUSHING
: **9-14** VOLTS WITH THE IGNITION SW ON AND THE SNOW MODE SW RELEASED
NE-E1: PULSE GENERATION (ENGINE IDLING)
TC-E1: **4.5-5.5** VOLTS WITH THE IGNITION SW ON AND THE ENGINE NOT RUNNING
WA-E1: **9-14** VOLTS WITH THE IGNITION SW ON AND THE ABS ECU NORMAL CONDITION
0.3 VOLTS WITH THE IGNITION SW ON AND THE ABS ECU ABNORMAL CONDITION
EFIB-E1 **9-14** VOLTS WITH THE IGNITION SW ON AND THE ENGINE NOT RUNNING
IDL2-E1: **9-14** VOLTS WITH THE ENGINE RUNNING AND THE SUB THROTTLE VALVE FULLY OPEN
0-3 VOLTS WITH THE ENGINE RUNNING AND THE SUB THROTTLE VALVE FULLY CLOSED
VTA2-E1: **3.2-4.9** VOLTS WITH THE ENGINE RUNNING AND THE SUB THROTTLE VALVE FULLY OPEN
0.3-0.8 VOLTS WITH THE ENGINE RUNNING AND THE SUB THROTTLE VALVE FULLY CLOSED
BATT-E1: ALWAYS **9-14** VOLTS
+B-E1: **9-14** VOLTS WITH THE IGNITION SW ON AND ENGINE NOT RUNNING
IDL1-E1: **9-14** VOLTS WITH THE IGNITION SW ON AND THE THROTTLE VALVE FULLY OPEN
0-3 VOLTS WITH THE IGNITION SW ON AND THE THROTTLE VALVE FULLY CLOSED
VTA1-E1: **3.2- 4.9** VOLTS WITH THE IGNITION SW ON AND THE THROTTLE VALVE FULLY OPEN
0.3-0.8 VOLTS WITH THE IGNITION SW ON AND THE THROTTLE VALVE FULLY CLOSED

RLY+-RL Y **:9-14** VOLTS WITH THE IGNITION SW ON
A,A-,B,B+--EO1: PULSE GENERATION (ENGINE RUNNING AND THE THROTTLE VALVE FULLY CLOSED)
EFI+,EFI-, ETC+,ETC--E1: PULSE GENERATION (IGNITION SW ON)

T 8 TRACTION CONTROL SW

4-6 :CLOSED WITH THE TRACTIOIN CONTROL SW AT **OFF** POSITION
8-6 :CLOSED WITH THE TRACTIOIN CONTROL SW AT **SNOW** POSITION

S18 SUB THROTTLE VALVE MOTOR

4-6, 3-1:APPROX. **0.44** Ω

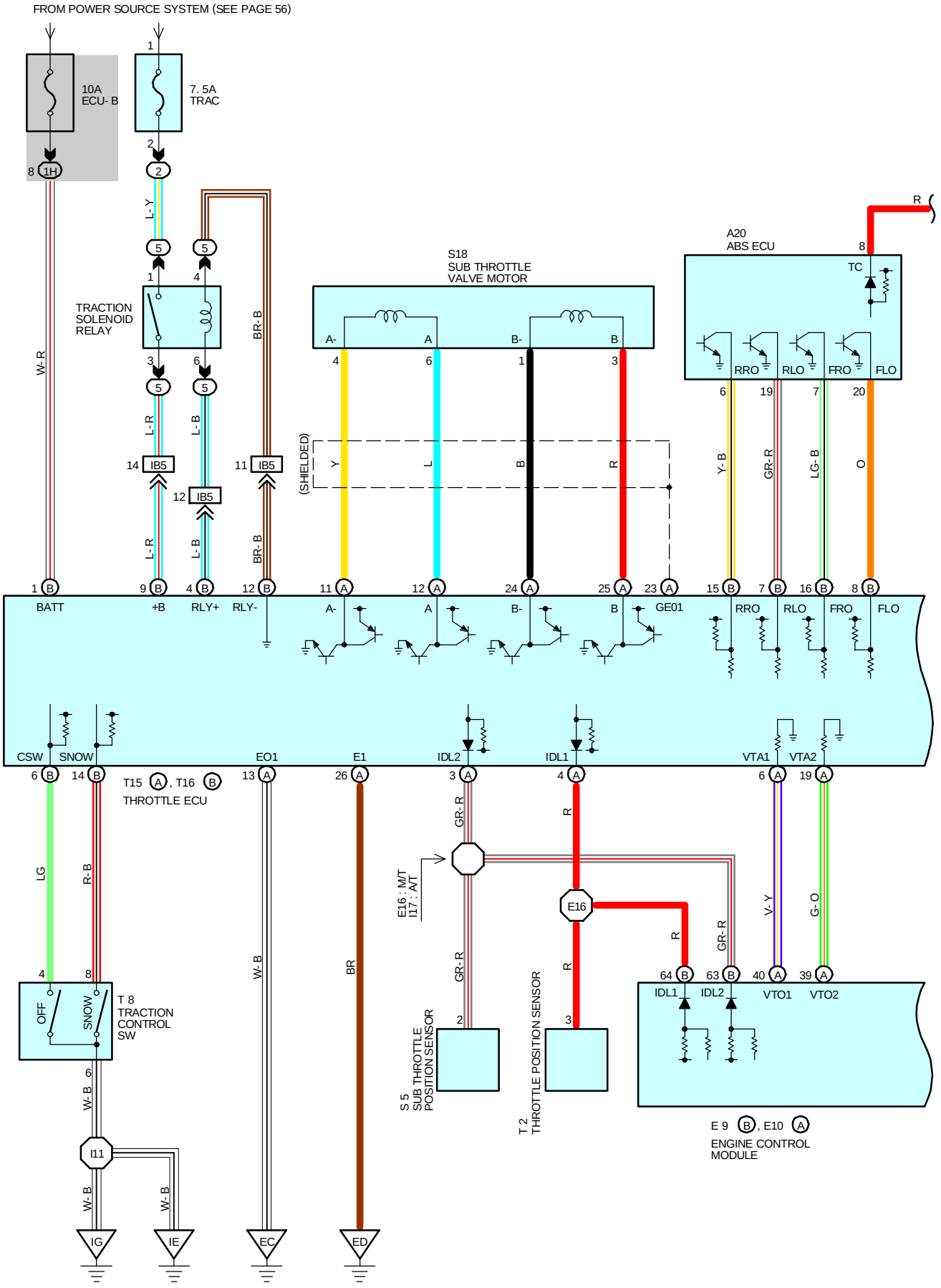
FROM POWER SOURCE SYSTEM (SEE PAGE 56)
10A
ECU- B
7. 5A
TRAC
1H
TRACTION
SOLENOID
RELAY
W- R
L- Y
BR- B
L- R
L- B
BR- B
IB5
S18
SUB THROTTLE
VALVE MOTOR
(SHIELDED)
A20
ABS ECU
TC
RRO
RLO
FRO
FLO
Y- B
GR- R
LG- B
O
R
BATT
+B
RLY+
RLY-
GE01
CSW
SNOW
EO1
E1
IDL2
IDL1
VTA1
VTA2
T15 A, T16 B
THROTTLE ECU
LG
R- B
T 8
TRACTION
CONTROL
SW
OFF
SNOW
W- B
I11
IG
IE
EC
ED
BR
GR- R
E16 : M/T
I17 : A/T
E16
V- Y
G- O
S 5
SUB THROTTLE
POSITION SENSOR
T 2
THROTTLE POSITION SENSOR
IDL1
IDL2
VTO1
VTO2
E 9 B, E10 A
ENGINE CONTROL
MODULE

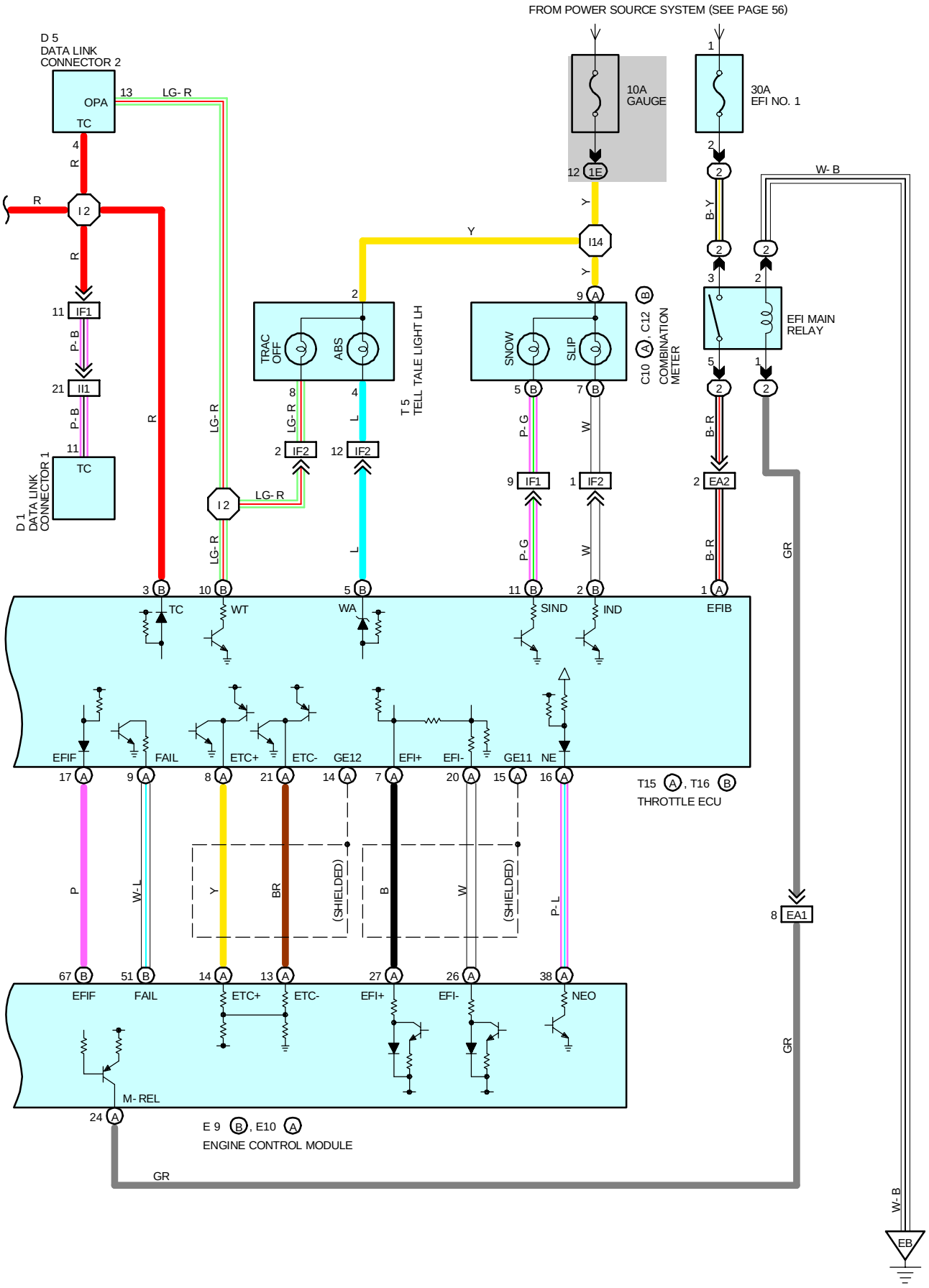
FROM POWER SOURCE SYSTEM (SEE PAGE 56)
D 5
DATA LINK
CONNECTOR 2
OPA
TC
13
LG- R
4
R
R
I 2
R
11
IF1
P- B
21
II1
P- B
11
TC
D 1
DATA LINK
CONNECTOR 1
LG- R
I 2
LG- R
2
IF2
8
LG- R
2
TRAC
OFF
ABS
4
L
12
IF2
T 5
TELL TALE LIGHT LH
10A
GAUGE
12
1E
Y
Y
I14
Y
9
A
B
C10
A
, C12
COMBINATION
METER
SNOW
SLIP
5
B
7
B
P- G
W
9
IF1
1
IF2
P- G
W
1
30A
EFI NO. 1
2
2
B- Y
2
2
3
2
EFI MAIN
RELAY
5
1
2
2
B- R
2
EA2
B- R
1
A
W- B
GR
3
B
10
B
5
B
11
B
2
B
1
A
TC
WT
WA
SIND
IND
EFIB
EFIF
FAIL
ETC+
ETC-
GE12
EFI+
EFI-
GE11
NE
17
A
9
A
8
A
21
A
14
A
7
A
20
A
15
A
16
A
T15
A
, T16
B
THROTTLE ECU
P
W- L
Y
BR
(SHIELDED)
B
W
(SHIELDED)
P- L
8
EA1
67
B
51
B
14
A
13
A
27
A
26
A
38
A
EFIF
FAIL
ETC+
ETC-
EFI+
EFI-
NEO
M- REL
24
A
E 9
B
, E10
A
ENGINE CONTROL MODULE
GR
GR
W- B
EB

: PARTS LOCATION

CODE	SEE PAGE	CODE	SEE PAGE	CODE	SEE PAGE
A20	28	E 9 B	29	T 5	29
C10 A	28	E10 A	29	T 8	29
C12 B	28	S 5	25(2JZ-GTE)	T15 A	29
D 1	24(2JZ-GTE)	S18	25(2JZ-GTE)	T16 B	29
D 5	28	T 2	25(2JZ-GTE)		

: RELAY BLOCKS

CODE	SEE PAGE	RELAY BLOCKS (RELAY BLOCK LOCATION)
2	22	R/B NO. 2 (ENGINE COMPARTMENT LEFT)
5	23	R/B NO. 5 (ENGINE COMPARTMENT RIGHT)

: JUNCTION BLOCK AND WIRE HARNESS CONNECTOR

CODE	SEE PAGE	JUNCTION BLOCK AND WIRE HARNESS (CONNECTOR LOCATION)
1E	20	INSTRUMENT PANEL WIRE AND J/B NO. 1 (LEFT KICK PANEL)
1H	20	COWL WIRE AND J/B NO. 1 (LEFT KICK PANEL)

: CONNECTOR JOINING WIRE HARNESS AND WIRE HARNESS

CODE	SEE PAGE	JOIINING WIRE HARNESS AND WIRE HARNESS (CONNECTOR LOCATION)
EA1	32(2J2-GTE)	ENGINE WIRE AND ENGINE ROOM MAIN WIRE (NEAR THE R/B NO. 2)
EA2		
IB5	36	ENGINE ROOM MAIN WIRE AND COWL WIRE (RIGHT KICK PANEL)
IF1	36	INSTRUMENT PANEL WIRE AND COWL WIRE (INSTRUMENT PANEL REINFORCEMENT LH)
IF2		
II1	38	ENGINE WIRE AND INSTRUMENT PANEL WIRE (RIGHT KICK PANEL)

: GROUND POINTS

CODE	SEE PAGE	GROUND POINTS LOCATION
EB	32(2JZ-GTE)	FRONT SIDE OF LEFT FENDER
EC	32(2JZ-GTE)	FRONT SIDE OF INTAKE MANIFOLD
ED	32(2JZ-GTE)	REAR SIDE OF INTAKE MANIFOLD
IE	36	LEFT KICK PANEL
IG	36	RIGHT KICK PANEL

: SPLICE POINTS

CODE	SEE PAGE	WIRE HARNESS WITH SPLICE POINTS	CODE	SEE PAGE	WIRE HARNESS WITH SPLICE POINTS
E16	32	ENGINE WIRE	I14	38	INSTRUMENT PANEL WIRE
I 2	38	COWL WIRE	I17	38	ENGINE WIRE
I11					

A20

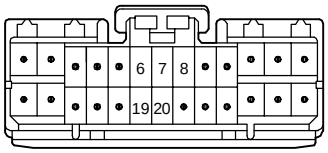

C10 (A) BLUE

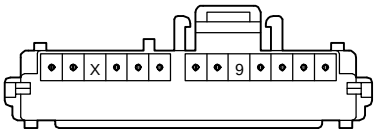

C12 (B)

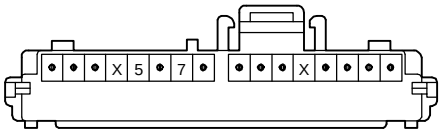

D 1 BLACK

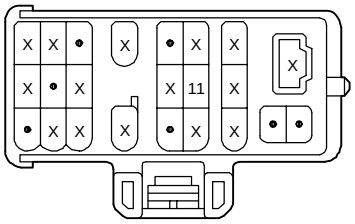

D 5 DARK GRAY

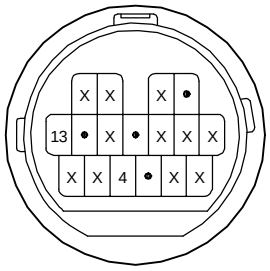

E 9 (B) DARK GRAY

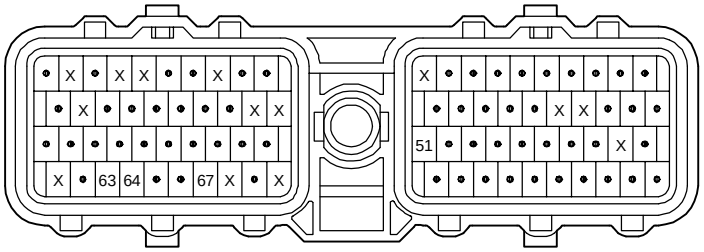

E10 (A) DARK GRAY

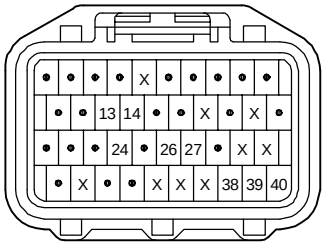

S 5 BLACK

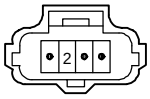

S18 BLACK

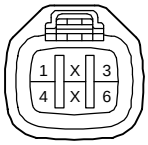

T 2 BLACK

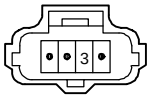

T 5

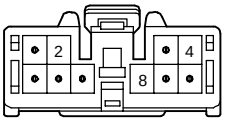

T 8

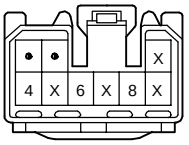

T15 (A)

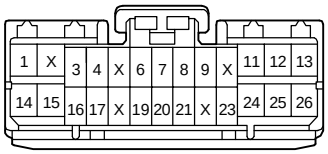

T16 (B)

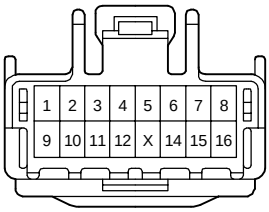

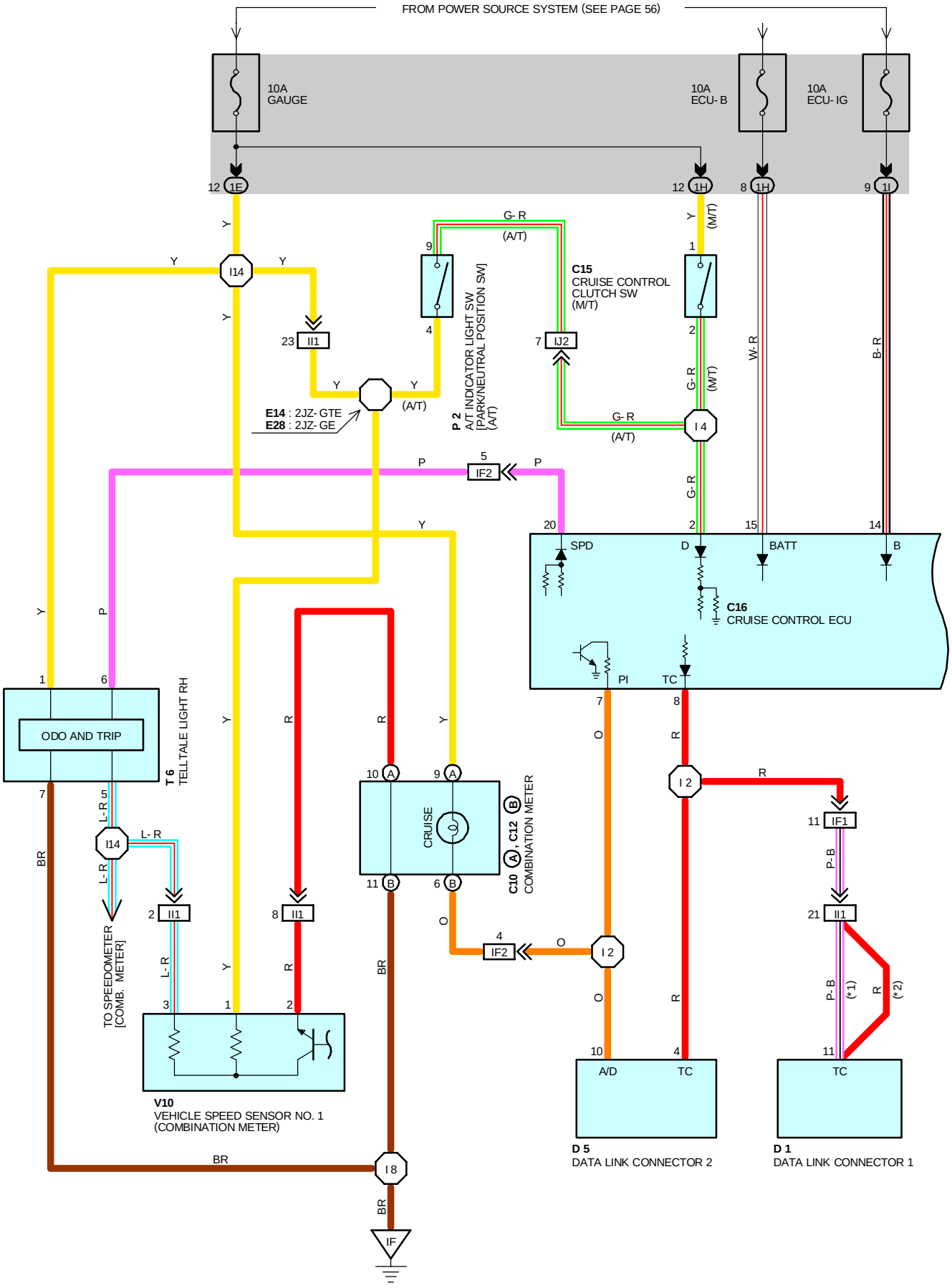
FROM POWER SOURCE SYSTEM (SEE PAGE 56)
10A GAUGE
10A ECU-B
10A ECU-IG
12 1E
12 1H
8 1H
9 1I
I14
23 II1
9
4
P 2 A/T INDICATOR LIGHT SW [PARK/NEUTRAL POSITION SW] (A/T)
G-R (A/T)
C15 CRUISE CONTROL CLUTCH SW (M/T)
7 IJ2
1
2
Y (M/T)
G-R (M/T)
W-R
B-R
I 4
G-R (A/T)
E14 : 2JZ-GTE
E28 : 2JZ-GE
(A/T)
5 IF2
P
20
15
14
SPD
D
BATT
B
C16 CRUISE CONTROL ECU
PI
TC
1
6
ODO AND TRIP
T6 TELLTALE LIGHT RH
7
5
L-R
I14
BR
TO SPEEDOMETER [COMB. METER]
2 II1
8 II1
10 A
9 A
CRUISE
11 B
6 B
C10 (A), C12 (B) COMBINATION METER
7
8
O
R
I 2
11 IF1
P-B
21 II1
4 IF2
3
1
2
V10 VEHICLE SPEED SENSOR NO. 1 (COMBINATION METER)
I 8
BR
IF
10
4
A/D
TC
D 5 DATA LINK CONNECTOR 2
11
TC
D 1 DATA LINK CONNECTOR 1
(*1)
(*2)

*1 : 2JZ-GTE
*2 : 2JZ-GE

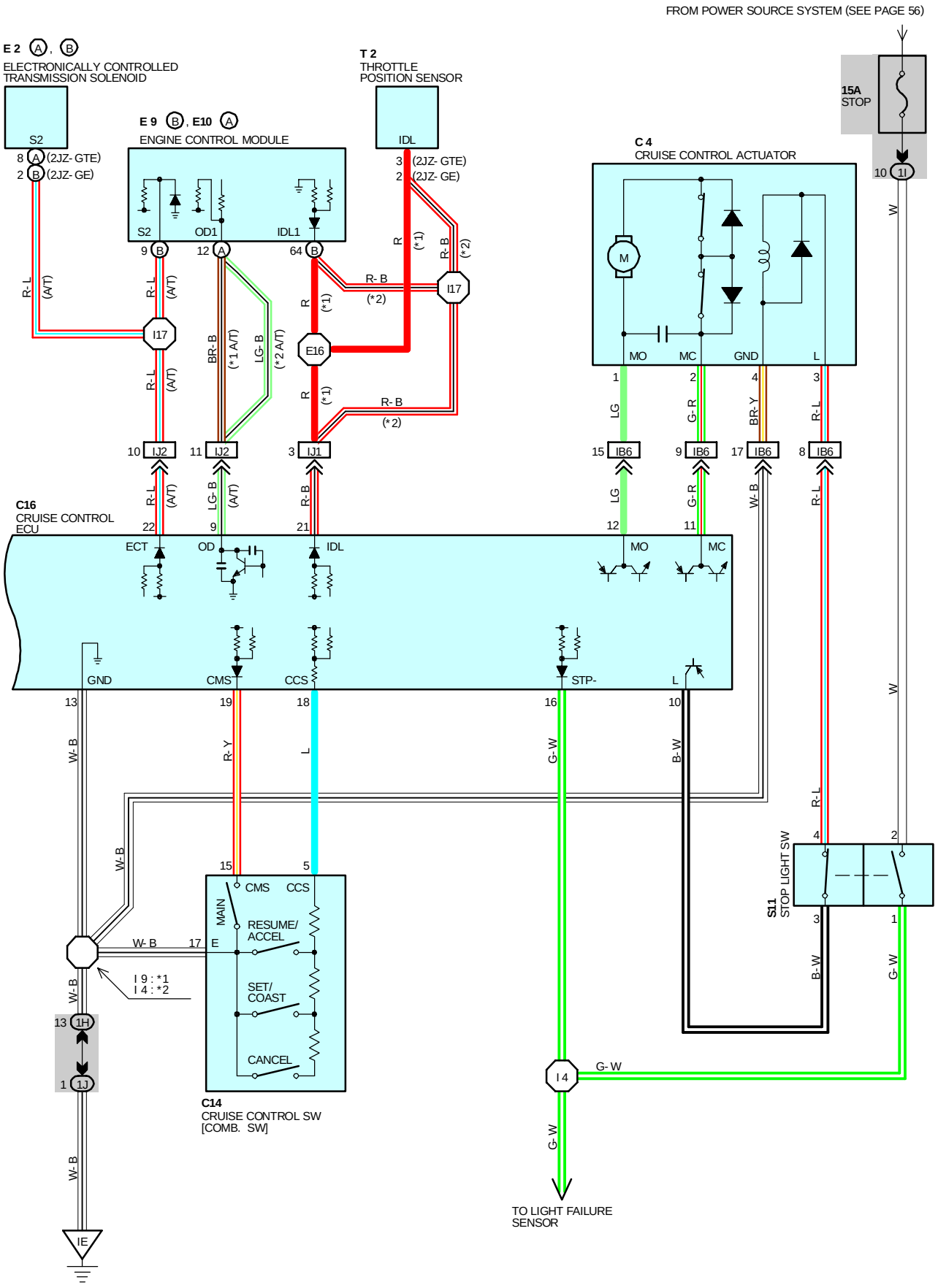

SYSTEM OUTLINE

CURRENT IS APPLIED AT ALL TIMES THROUGH **STOP** FUSE TO **TERMINAL 1** OF THE CRUISE CONTROL ECU, **TERMINAL 2** OF THE STOP LIGHT SW, AND ALSO THROUGH THE **ECU-B** FUSE TO **TERMINAL 15** OF THE CRUISE CONTROL ECU.
WITH THE IGNITION SW TURNED TO ON, THE CURRENT FLOWS THROUGH GAUGE FUSE TO **TERMINAL (A) 9** OF THE COMBINATION METER AND THE CURRENT THROUGH **ECU-IG** FUSE FLOWS TO **TERMINAL 14** OF THE CRUISE CONTROL ECU.
WHEN THE IGNITION SW IS ON AND THE CRUISE CONTROL MAIN SWITCH IS TURNED ON, A SIGNAL IS INPUT FROM **TERMINAL 15** OF CRUISE CONTROL MAIN SW TO **TERMINAL 19** OF THE CRUISE CONTROL ECU. AS A RESULT, THE CRUISE CONTROL ECU FUNCTIONS AND THE CURRENT FLOWS THROUGH **TERMINAL 14** OF THE CRUISE CONTROL ECU TO **TERMINAL 13** OF THE CRUISE CONTROL ECU → **GROUND**, AND THE CRUISE CONTROL SYSTEM IS IN A CONDITION READY FOR OPERATION.
AT THE SAME TIME, THE CURRENT THROUGH THE **GAUGE** FUSE FLOWS TO **TERMINAL (A) 9** OF THE CRUISE CONTROL INDICATOR LIGHT → **TERMINAL (B) 6** → **TERMINAL 7** OF THE CRUISE CONTROL ECU → **TERMINAL 13** → **GROUND**, CAUSING THE CRUISE CONTROL INDICATOR LIGHT TO LIGHT UP, INDICATING THAT THE CRUISE CONTROL IS READY FOR OPERATION.

1. SET OPERATION

WHEN THE CRUISE CONTROL MAIN SW IS TURNED ON AND THE SET SW IS PUSHED WITH THE VEHICLE SPEED WITHIN THE SET LIMIT (APPROX. **40** KM/H, **25** MPH TO **200** KM/H, **124** MPH), A SIGNAL IS INPUT TO **TERMINAL 18** OF THE CRUISE CONTROL ECU AND THE VEHICLE SPEED AT THE TIME THE SET SW IS RELEASED, WHICH I MEMORIZED IN THE ECU AS THE SET SPEED.

2. SET SPEED CONTROL

DURING CRUISE CONTROL DRIVING, THE ECU COMPARES THE SET SPEED MEMORIZED IN THE ECU WITH THE ACTUAL VEHICLE SPEED INPUTS INTO **TERMINAL 20** OF THE CRUISE CONTROL ECU FROM THE SPEED SENSOR, AND CONTROLS THE CRUISE CONTROL ACTUATOR TO MAINTAIN THE SET SPEED.
WHEN THE ACTUAL SPEED IS LOWER THAN THE SET SPEED, THE ECU CAUSES THE CURRENT TO THE CRUISE CONTROL ACTUATOR TO FLOW FROM **TERMINAL 12** → **TERMINAL 1** OF THE CRUISE CONTROL ACTUATOR → **TERMINAL 2** → **TERMINAL 11** OF THE CRUISE CONTROL ECU. AS A RESULT, THE MOTOR IN THE CRUISE CONTROL ACTUATOR IS ROTATED TO OPEN THE THROTTLE VALVE AND THE THROTTLE CABLE IS PULLED TO INCREASE THE VEHICLE SPEED. WHEN THE ACTUAL DRIVING SPEED IS HIGHER THAN THE SET SPEED, THE CURRENT TO CRUISE CONTROL ACTUATOR FLOWS FROM **TERMINAL 11** OF THE ECU → **TERMINAL 2** OF THE CRUISE CONTROL ACTUATOR → **TERMINAL 1** → **TERMINAL 12** OF THE CRUISE CONTROL ECU.
THIS CAUSES THE MOTOR IN THE CRUISE CONTROL ACTUATOR TO ROTATE TO CLOSE THE THROTTLE VALVE AND RETURN THE THROTTLE CABLE TO DECREASE THE VEHICLE SPEED.

3. COAST CONTROL

DURING THE CRUISE CONTROL DRIVING, WHILE THE COAST SW IS ON, THE CRUISE CONTROL ACTUATOR RETURNS THE THROTTLE CABLE TO CLOSE THE THROTTLE VALVE AND DECREASE THE DRIVING SPEED. THE VEHICLE SPEED WHEN THE COAST SWITCH IS TURNED OFF IS MEMORIZED AND THE VEHICLE CONTINUES AT THE NEW SET SPEED.

4. ACCEL CONTROL

DURING CRUISE CONTROL DRIVING, WHILE THE ACCEL SW IS TURNED ON, THE CRUISE CONTROL ACTUATOR PULLS THE THROTTLE CABLE TO OPEN THE THROTTLE VALVE AND INCREASE THE DRIVING SPEED.
THE VEHICLE SPEED WHEN THE ACCEL SW IS TURNED OFF IS MEMORIZED AND THE VEHICLE CONTINUES AT THE NEW SET SPEED.

5. RESUME CONTROL

UNLESS THE VEHICLE SPEED FALLS BELOW THE MINIMUM SPEED LIMIT (APPROX. **40** KM/H, **25** MPH) AFTER CANCELING THE SET SPEED BY THE CANCEL SW, PUSHING THE RESUME SW WILL CAUSE THE VEHICLE TO RESUME THE SPEED SET BEFORE THE CANCELLATION.

6. MANUAL CANCEL MECHANISM

IF ANY OF THE FOLLOWING OPERATIONS OCCUR DURING CRUISE CONTROL OPERATION, THE MAGNETIC CLUTCH OF THE ACTUATOR TURNS OFF AND THE MOTOR ROTATES TO CLOSE THE THROTTLE VALVE AND THE CRUISE CONTROL IS RELEASED.

* PLACING THE SHIFT LEVER IN EXCEPT “D” POSITION (PARK/NEUTRAL POSITION SW EXCEPT “D” POSITION). “SIGNAL IS NOT INPUT TO **TERMINAL 2** OF THE ECU” (A/T)
* DEPRESSING THE BRAKE PEDAL (STOP LIGHT SW ON). “SIGNAL IS INPUT TO **TERMINAL 16** OF THE ECU”
* PUSHING THE CANCEL SWITCH (CANCEL SW ON). “SIGNAL IS INPUT TO **TERMINAL 18** OF THE ECU”
* DEPRESSING THE CLUTCH PEDAL (CRUISE CONTROL CLUTCH SW OFF). “SIGNAL IS NOT INPUT TO **TERMINAL 2** OF THE ECU”

7. AUTO CANCEL FUNCTION

A) IF ANY OF THE FOLLOWING OPERATING CONDITIONS OCCUR DURING CRUISE CONTROL OPERATION, THE SET SPEED IS ERASED, CURRENT FLOW TO MAGNETIC CLUTCH IS STOPPED AND THE CRUISE CONTROL IS RELEASED. (MAIN SW TURNS OFF).
WHEN THIS OCCURS, THE IGNITION SW MUST BE TURNED OFF ONCE BEFORE THE MAIN SW WILL TURN ON.
- OVER CURRENT TO TRANSISTOR DRIVING MOTOR AND/OR MAGNETIC CLUTCH.
- WHEN CURRENT CONTINUED TO FLOW TO THE MOTOR INSIDE THE ACTUATOR IN THE THROTTLE VALVE "OPEN" DIRECTION.
- OPEN CIRCUIT IN MAGNETIC CLUTCH.
- MOMENTARY INTERRUPTION OF VEHICLE SPEED SIGNAL.
- SHORT CIRCUIT IN CRUISE CONTROL SW.
- MOTOR DOES NOT OPERATE DESPITE THE MOTOR DRIVE SIGNAL BEING OUTPUT.

B) IF ANY OF THE FOLLOWING CONDITIONS OCCUR DURING CRUISE CONTROL OPERATION, THE SET SPEED IS ERASED AND THE CRUISE CONTROL IS RELEASED. (THE POWER OF MAGNETIC CLUTCH IS CUT OFF UNTIL THE SET SW IS "ON" AGAIN.)
- WHEN THE VEHICLE SPEED FALLS BELOW THE MINIMUM SPEED LIMIT, APPROX. **40** KM/H (**25** MPH)
- WHEN THE VEHICLE SPEED FALLS MORE THAN **16** KM/H (**10** MPH) BELOW THE SET SPEED, E.G. ON AN UPWARD SLOPE.
- WHEN POWER TO THE CRUISE CONTROL SYSTEM IS MOMENTARILY CUT OFF.

8. AUTOMATIC TRANSMISSION CONTROL FUNCTION
- IN OVERDRIVE. IF THE VEHICLE SPEED BECOMES LOWER THAN THE OVERDRIVE CUT SPEED (SET SPEED MINUS APPROX. **4** KM/H, **2.5** MPH) DURING CRUISE CONTROL OPERATION, SUCH AS DRIVING UP A HILL, THE OVERDRIVE IS RELEASED AND THE POWER INCREASED TO PREVENT A REDUCTION IN VEHICLE SPEED.
- AFTER RELEASING THE OVERDRIVE, VEHICLE SPEED BECOMES HIGHER THAN THE OVERDRIVE RETURN SPEED (SET SPEED MINUS APPROX, **2** KM/H, **1.2** MPH) AND THE ECU JUDGES BY THE SIGNALS FROM POTENTIOMETER OF THE ACTUATOR THAT THE UPWARD SLOPE HAS FINISHED, OVERDRIVE IS RESUMED AFTER APPROXIMATELY **2** SECONDS.
- DURING CRUISE CONTROL DRIVING, THE CRUISE CONTROL OPERATION SIGNAL IS OUTPUT FROM THE CRUISE CONTROL ECU TO THE ENGINE CONTROL MODULE. UPON RECEIVING THIS SIGNAL, THE ENGINE CONTROL MODULE CHANGES THE SHIFT PATTERN TO NORMAL. TO MAINTAIN SMOOTH CRUISE CONTROL OPERATION (ON A DOWNWARD SLOPE ETC.), LOCK-UP RELEASE OF THE TRANSMISSION WHEN THE IDLING POINT OF THE THROTTLE POSITION IS "ON" IS FORBIDDEN.

SERVICE HINTS

C 4 CRUISE CONTROL ACTUATOR

3-4 : APPROX. **38.5** Ω

C14 CRUISE CONTROL SW [COMB. SW]

15-17 : CONTINUITY WITH THE MAIN SW ON
5-17 : APPROX. **418** Ω WITH THE CANCEL SW ON
APPROX. **68** Ω WITH THE RESUME/ACCEL SW ON
APPROX. **198** Ω WITH THE SET/COAST SW ON

C16 CRUISE CONTROL ECU

14-GROUND : APPROX. **12** VOLTS WITH THE IGNITION SW AT **ON** POSITION
15-GROUND : ALWAYS APPROX. **12** VOLTS
20-GROUND : **4** PULSE WITH **1** ROTATION OF ROTOR SHAFT
18-GROUND : APPROX. **418** Ω WITH THE CANCEL SW ON IN CONTROL SW
APPROX. **198** Ω WITH THE SET/COAST SW ON IN CONTROL SW
APPROX. **68** Ω WITH THE RESUME/ACCEL SW ON IN CONTROL SW
13-GROUND : ALWAYS CONTINUITY

: PARTS LOCATION

CODE	SEE PAGE	CODE	SEE PAGE	CODE	SEE PAGE
C 4	24 (2JZ-GTE)	D 1	26 (2JZ-GE)	S11	29
	26 (2JZ-GE)	D 5	28	T 2	25 (2JZ-GTE)
C10 A	28	E 2 A	24 (2JZ-GTE)		27 (2JZ-GE)
C12 B	28	E 2 B	26 (2JZ-GE)	T 6	29
C14	28	E 9 B	29	V10	25 (2JZ-GTE)
C15	28	E10 A	29		27 (2JZ-GE)
C16	28	P 2	25 (2JZ-GTE)		
D 1	24 (2JZ-GTE)		17 (2JZ-GE)		

: JUNCTION BLOCK AND WIRE HARNESS CONNECTOR

CODE	SEE PAGE	JUNCTION BLOCK AND WIRE HARNESS (CONNECTOR LOCATION)
1E	20	INSTRUMENT PANEL WIRE AND J/B NO. (LEFT KICK PANEL)
1H	20	COWL WIRE AND J/B NO. 1 (LEFT KICK PANEL)
1I		
1J		

: CONNECTOR JOINING WIRE HARNESS AND WIRE HARNESS

CODE	SEE PAGE	JOINING WIRE HARNESS AND WIRE HARNESS (CONNECTOR LOCATION)
IB6	36	ENGINE ROOM MAIN WIRE AND COWL WIRE (RIGHT KICK PANEL)
IF1	36	INSTRUMENT PANEL WIRE AND COWL WIRE (INSTRUMENT PANEL REINFORCEMENT LH)
IF2		
II1	38	ENGINE WIRE AND INSTRUMENT PANEL WIRE (RIGHT KICK PANEL)
IJ1	38	ENGINE WIRE AND COWL WIRE (RIGHT KICK PANEL)
IJ2		

: GROUND POINTS

CODE	SEE PAGE	GROUND POINTS LOCATION
IE	36	LEFT KICK PANEL
IF		

: SPLICE POINTS

CODE	SEE PAGE	WIRE HARNESS WITH SPLICE POINTS	CODE	SEE PAGE	WIRE HARNESS WITH SPLICE POINTS
E14	32	ENGINE WIRE	I4	38	COWL WIRE
E16			I8	38	INSTRUMENT PANEL WIRE
E28	34		I14		
I2	38	COWL WIRE	I17	38	ENGINE WIRE

C 4 GRAY



C10 (A) BLUE

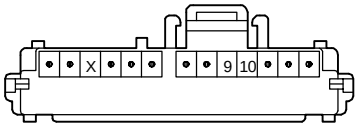

C12 (B)

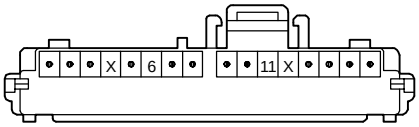

C14 BLACK

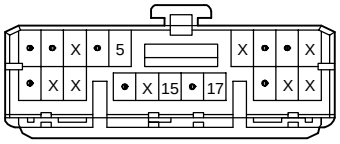

C15

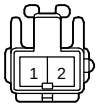

(A/T) **C16** GREEN

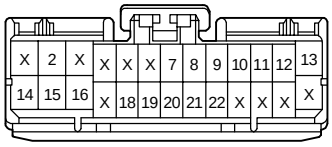

(M/T) **C16** GREEN

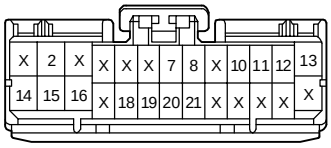

D 1 BLACK

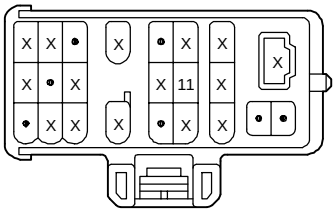

(2JZ- GTE) **D 5** DARK GRAY

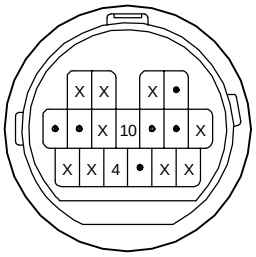

(2JZ- GTE) **E 2** (A) GRAY

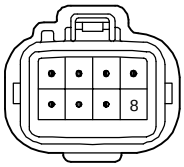

(2JZ- GE) **E** 2 (B) BLACK

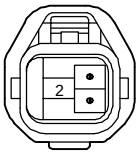

(2JZ- GTE) **E 9** (B) DARK GRAY

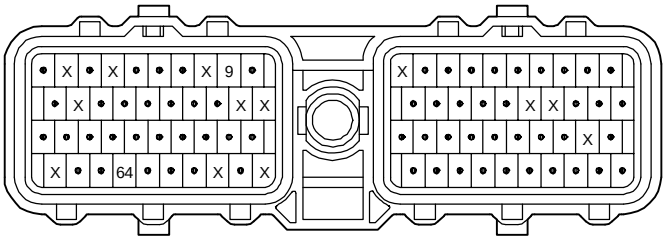
X X X X X 9
X X X X X X
X 64 X X
X X X X X X X X X

(2JZ- GE) **E10** (A) DARK GRAY

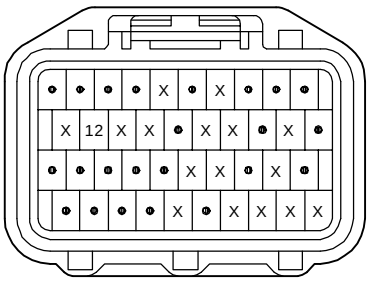

P 2 GRAY

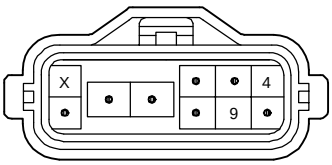

S11 BLUE

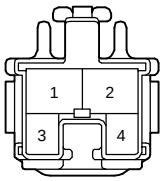

(2JZ- GTE) **T 2** BLACK

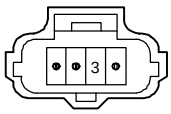

(2JZ- GE) **T 2** BLACK

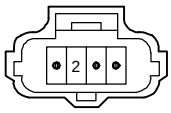

T 6

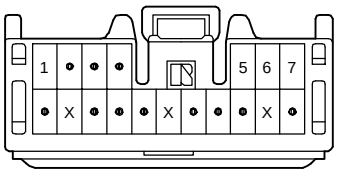

V10 BLACK

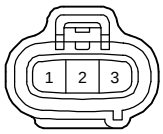

C10 (A) BLUE

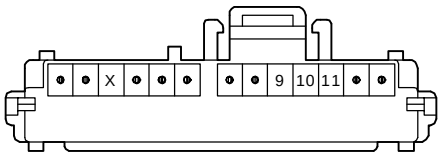

C12 (B)

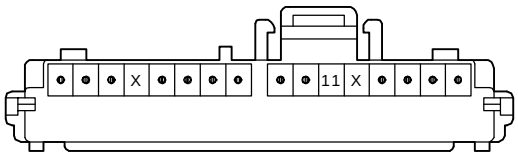

P 1 GRAY

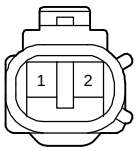

P 4 BLUE

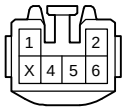

T 6

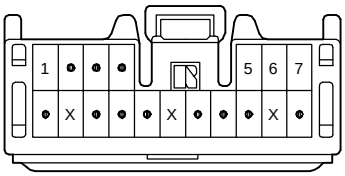

V10 BLACK

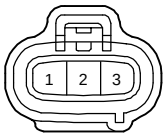

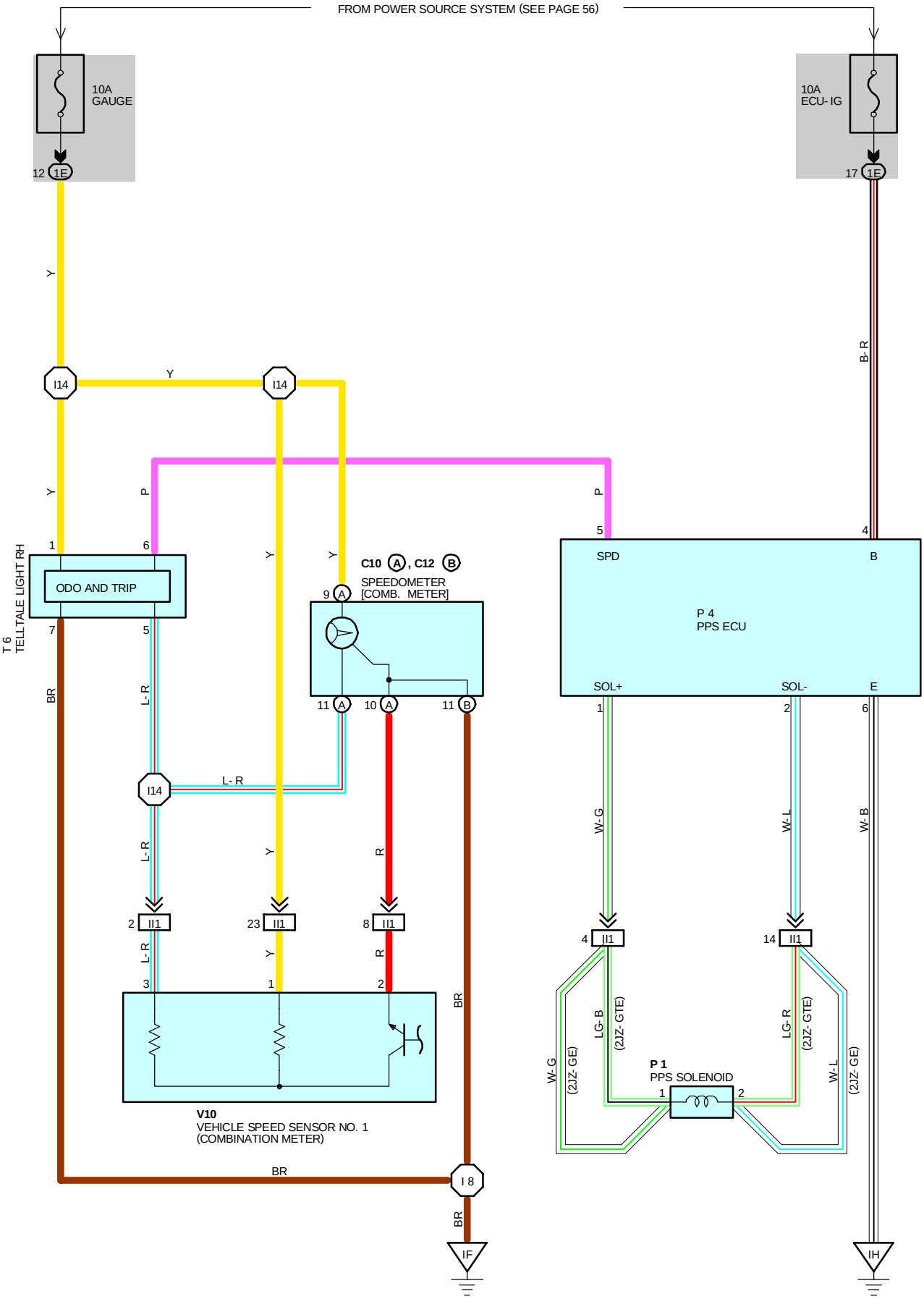
FROM POWER SOURCE SYSTEM (SEE PAGE 56)
10A
GAUGE
12 1E
10A
ECU- IG
17 1E
Y
B- R
I14
Y
I14
Y
P
P
1
6
5
4
T 6
TELLTALE LIGHT RH
ODO AND TRIP
7
5
BR
L- R
Y
Y
C10 A, C12 B
SPEEDOMETER
[COMB. METER]
9 A
11 A
10 A
11 B
SPD
B
P 4
PPS ECU
SOL+
SOL-
E
1
2
6
I14
L- R
L- R
Y
R
W- G
W- L
W- B
2 I11
23 I11
8 I11
4 I11
14 I11
L- R
Y
R
3
1
2
BR
LG- B
(2JZ- GE)
W- G
(2JZ- GE)
LG- R
(2JZ- GE)
W- L
(2JZ- GE)
P 1
PPS SOLENOID
1
2
V10
VEHICLE SPEED SENSOR NO. 1
(COMBINATION METER)
BR
I 8
BR
IF
IH

SYSTEM OUTLINE

THE PPS (HYDRAULIC REACTION TYPE) CONTROLS THE HYDRAULIC PRESSURE APPLIED TO THE HYDRAULIC REACTION CHAMBER IN THE GEAR BOX CONTROL UNIT USING THE PPS ECU, TO CHANGE THE STEERING FORCE AND PROVIDE OPTIMUM STEERING FEELING AT ANY VEHICLE SPEEDS AND UNDER ANY STEERING CONDITIONS.

(PPS OPERATION)
WHEN THE IGNITION SW IS TURNED ON THE STARTING CURRENT FLOWS FROM THE **ECU-IG** FUSE TO **TERMINAL 4** OF THE PPS ECU. THE PPS ECU MONITORS VEHICLE SPEED, INPUT SIGNAL TO **TERMINAL 5** OF THE ECU. WHEN THE VEHICLE SPEED IS LOW, THE PPS ECU SENDS A HIGHER-CURRENT FROM **TERMINAL 1** OF THE ECU ➔ **TERMINAL 1** OF THE SOLENOID VALVE ➔ **TERMINAL 2** ➔ **TERMINAL 2** OF THE ECU ➔ **TERMINAL 6** ➔ **GROUND**, INCREASING THE SOLENOID VALVE OPENING ANGLE TO PROVIDE COMFORTABLE STEERING OPERATION. WHEN THE VEHICLE SPEED IS HIGH, THE PPS ECU DECREASES THE SOLENOID VALVE OPENING ANGLE BY REDUCING THE CURRENT TO THE VALVE TO PROVIDE RESPONSIVE STEERING FEELING.

SERVICE HINTS

P1 PPS SOLENOID

1-2 : APPROX. **7.7** Ω (**25**•C, **77**•F)

P4 PPS ECU

4-GROUND : APPROX. **12** VOLTS WITH THE IGNITION SW AT **ON** POSITION
6-GROUND : ALWAYS CONTINUITY

: PARTS LOCATION

CODE		SEE PAGE	CODE	SEE PAGE	CODE	SEE PAGE
C10	A	28	P1	27 (2JZ-GE)	V10	25 (2JZ-GTE)
C12	B	28	P4	29		27 (2JZ-GE)
P1		25 (2JZ-GTE)	T6	29		

: JUNCTION BLOCK AND WIRE HARNESS CONNECTOR

CODE	SEE PAGE	JUNCTION BLOCK AND WIRE HARNESS (CONNECTOR LOCATION)
1E	20	INSTRUMENT PANEL WIRE AND J/B NO. 1 (LEFT KICK PANEL)

: CONNECTOR JOINING WIRE HARNESS AND WIRE HARNESS

CODE	SEE PAGE	JOINING WIRE HARNESS AND WIRE HARNESS (CONNECTOR LOCATION)
II1	38	ENGINE WIRE AND INSTRUMENT PANEL WIRE (RIGHT KICK PANEL)

: GROUND POINTS

CODE	SEE PAGE	GROUND POINTS LOCATION
IF	36	LEFT KICK PANEL
IH	36	RIGHT KICK PANEL

: SPLICE POINTS

CODE	SEE PAGE	WIRE HARNESS WITH SPLICE POINTS	CODE	SEE PAGE	WIRE HARNESS WITH SPLICE POINTS
I8	38	INSTRUMENT PANEL WIRE	I14	38	INSTRUMENT PANEL WIRE

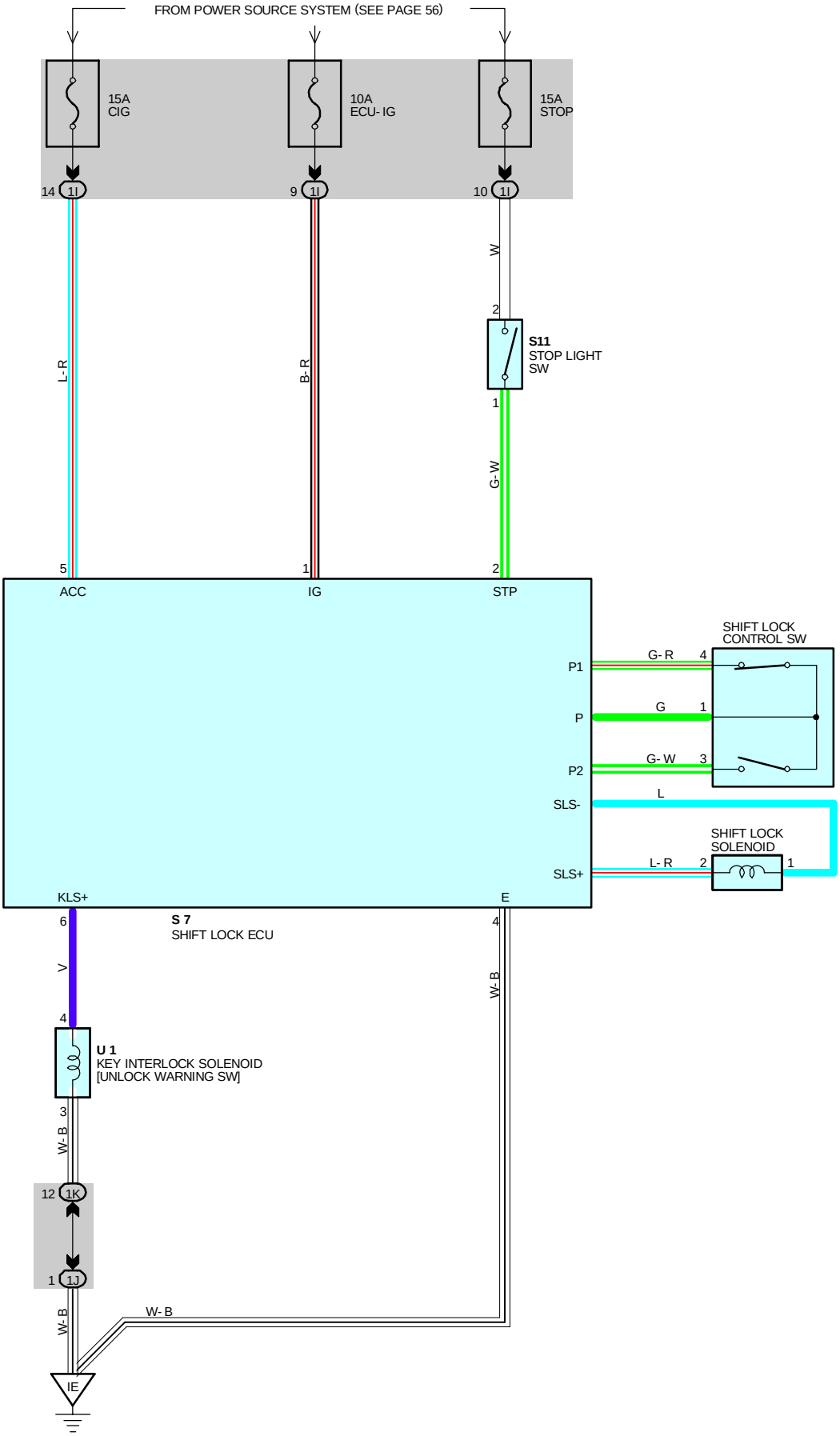
FROM POWER SOURCE SYSTEM (SEE PAGE 56)
15A
CIG
10A
ECU- IG
15A
STOP
14 1I
9 1I
10 1I
W
2
S11
STOP LIGHT
SW
1
L- R
B- R
G- W
5
1
2
ACC
IG
STP
SHIFT LOCK
CONTROL SW
P1
G- R
4
P
G
1
P2
G- W
3
L
SLS-
SHIFT LOCK
SOLENOID
SLS+
L- R
2
1
KLS+
E
6
S 7
SHIFT LOCK ECU
4
V
W- B
4
U 1
KEY INTERLOCK SOLENOID
[UNLOCK WARNING SW]
3
W- B
12 1K
1 1J
W- B
W- B
IE

SYSTEM OUTLINE

WHEN THE IGNITION SW IS TURNED TO **ACC** POSITION THE CURRENT FROM THE **CIG** FUSE FLOWS TO **TERMINAL 5** OF THE SHIFT LOCK ECU, IN THE ON POSITION, THE CURRENT FROM THE **ECU-IG** FUSE FLOWS TO **TERMINAL 1** OF THE ECU.

1. SHIFT LOCK MECHANISM

WITH THE IGNITION SW ON, WHEN A SIGNAL THAT THE BRAKE PEDAL IS DEPRESSED (STOP LIGHT SW ON) AND A SIGNAL THAT THE SHIFT LEVER IS PUT IN **"P"** POSITION (CONTINUITY BETWEEN P1 AND P OF THE SHIFT LOCK CONTROL SW) IS INPUT TO THE ECU, THE ECU OPERATES AND CURRENT FLOWS FROM **TERMINAL 1** OF THE ECU ➔ **TERMINAL 'SLS+'** OF THE SHIFT LOCK SOLENOID SOLENOID ➔ **TERMINAL 'SLS-'** ➔ **TERMINAL 4** OF THE ECU ➔ **GROUND**. THIS CAUSES THE SHIFT LOCK SOLENOID TO TURN ON (PLATE STOPPER DISENGAGES) AND THE SHIFT LEVER CAN SHIFT INTO POSITION OTHER THAN THE **"P"**.

2. KEY INTERLOCK MECHANISM

WITH THE IGNITION SW **ON** OR **ACC** POSITION, WHEN THE SHIFT LEVER IS PUT IN **"P"** POSITION (NO CONTINUITY BETWEEN P2 AND P OF SHIFT LOCK CONTROL SW), THE CURRENT FLOWING FROM **TERMINAL 6** OF THE ECU ➔ KEY INTERLOCK SOLENOID IS CUT OFF. THIS CAUSES THE KEY INTERLOCK SOLENOID TO TURN OFF (LOCK LEVER DISENGAGES FROM **LOCK** POSITION) AND THE IGNITION KEY CAN BE TURNED FROM **ACC** TO **LOCK** POSITION.

SERVICE HINTS

S7 SHIFT LOCK ECU

5-GROUND : APPROX. **12** VOLTS WITH THE IGNITION SW AT **ACC** OR **ON** POSITION
1-GROUND : APPROX. **12** VOLTS WITH THE IGNITION SW AT **ON** POSITION
4-GROUND : ALWAYS CONTINUITY
2-GROUND : APPROX. **12** VOLTS WITH THE BRAKE PEDAL DEPRESSED

S11 STOP LIGHT SW

2-1 : CLOSED WITH THE BRAKE PEDAL DEPRESSED

○ : PARTS LOCATION

CODE	SEE PAGE	CODE	SEE PAGE	CODE	SEE PAGE
S7	29	S11	29	U1	29

⬭ : JUNCTION BLOCK AND WIRE HARNESS CONNECTOR

CODE	SEE PAGE	JUNCTION BLOCK AND WIRE HARNESS (CONNECTOR LOCATION)
1I	20	COWL WIRE AND J/B NO. 1 (LEFT KICK PANEL)
1J		
1K		

▽ : GROUND POINTS

CODE	SEE PAGE	GROUND POINTS LOCATION
IE	36	LEFT KICK PANEL

S 7

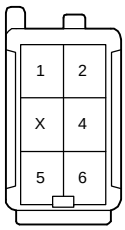

S11 BLUE

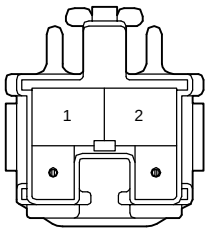

U 1

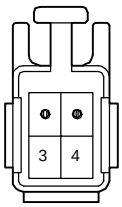

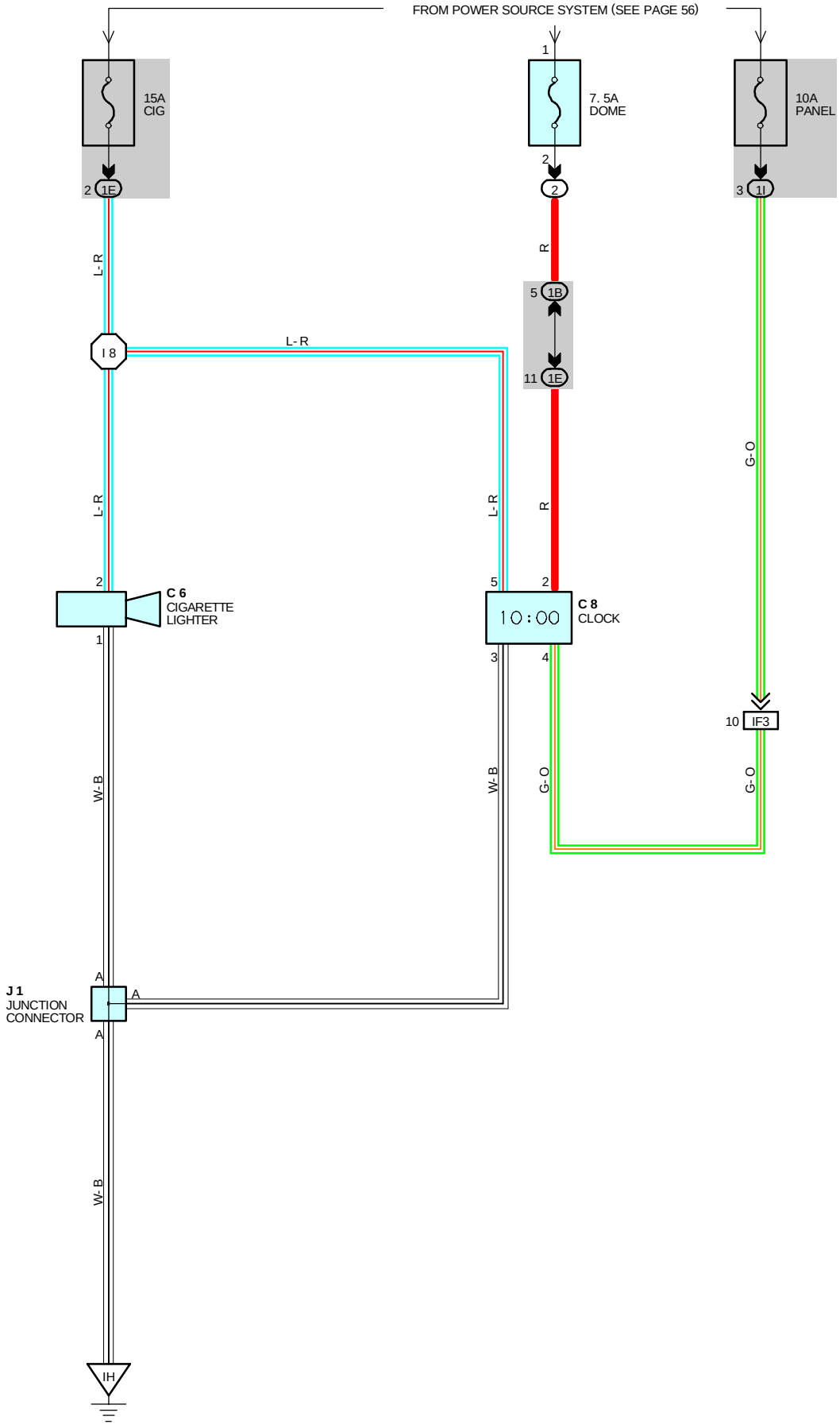
FROM POWER SOURCE SYSTEM (SEE PAGE 56)
15A
CIG
7. 5A
DOME
10A
PANEL
2 1E
1
2
3 1I
2
R
5 1B
11 1E
I 8
L- R
L- R
L- R
R
G- O
2
C 6
CIGARETTE
LIGHTER
1
5
2
C 8
CLOCK
10:00
3
4
10 IF3
W- B
W- B
G- O
G- O
A
J 1
JUNCTION
CONNECTOR
A
A
W- B
IH

SERVICE HINTS

C6 CIGARETTE LIGHTER

2-GROUND : APPROX. **12** VOLTS WITH THE IGNITION SW AT **ACC** OR **ON** POSITION
1-GROUND : ALWAYS CONTINUITY

C8 CLOCK

2-GROUND : ALWAYS **12** VOLTS (POWER FOR CLOCK)
5-GROUND : APPROX. **12** VOLTS WITH THE IGNITION SW AT **ACC** OR **ON** POSITION (POWER FOR INDICATION)
3-GROUND : ALWAYS CONTINUITY

: PARTS LOCATION

CODE	SEE PAGE	CODE	SEE PAGE	CODE	SEE PAGE
C6	28	C8	28	J1	29

: RELAY BLOCKS

CODE	SEE PAGE	RELAY BLOCKS (RELAY BLOCK LOCATION)
2	22	R/B NO. 2 (ENGINE COMPARTMENT LEFT)

: JUNCTION BLOCK AND WIRE HARNESS CONNECTOR

CODE	SEE PAGE	JUNCTION BLOCK AND WIRE HARNESS (CONNECTOR LOCATION)
1B	20	ENGINE ROOM MAIN WIRE AND J/B NO. 1 (LEFT KICK PANEL)
1E	20	INSTRUMENT PANEL WIRE AND J/B NO. 1 (LEFT KICK PANEL)
1I	20	COWL WIRE AND J/B NO. 1 (LEFT KICK PANEL)

: CONNECTOR JOINING WIRE HARNESS AND WIRE HARNESS

CODE	SEE PAGE	JOINING WIRE HARNESS AND WIRE HARNESS (CONNECTOR LOCATION)
IF3	36	INSTRUMENT PANEL WIRE AND COWL WIRE (RIGHT KICK PANEL)

: GROUND POINTS

CODE	SEE PAGE	GROUND POINTS LOCATION
IH	36	RIGHT KICK PANEL

: SPLICE POINTS

CODE	SEE PAGE	WIRE HARNESS WITH SPLICE POINTS	CODE	SEE PAGE	WIRE HARNESS WITH SPLICE POINTS
I8	38	INSTRUMENT PANEL WIRE			

C 6

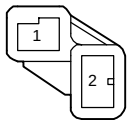

C 8 GRAY

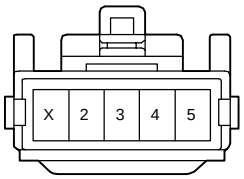

J 1

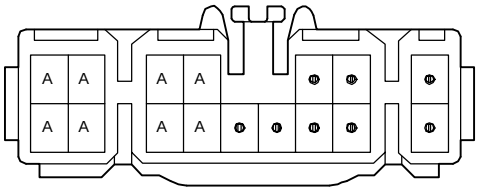

(HINT : SEE PAGE 7)

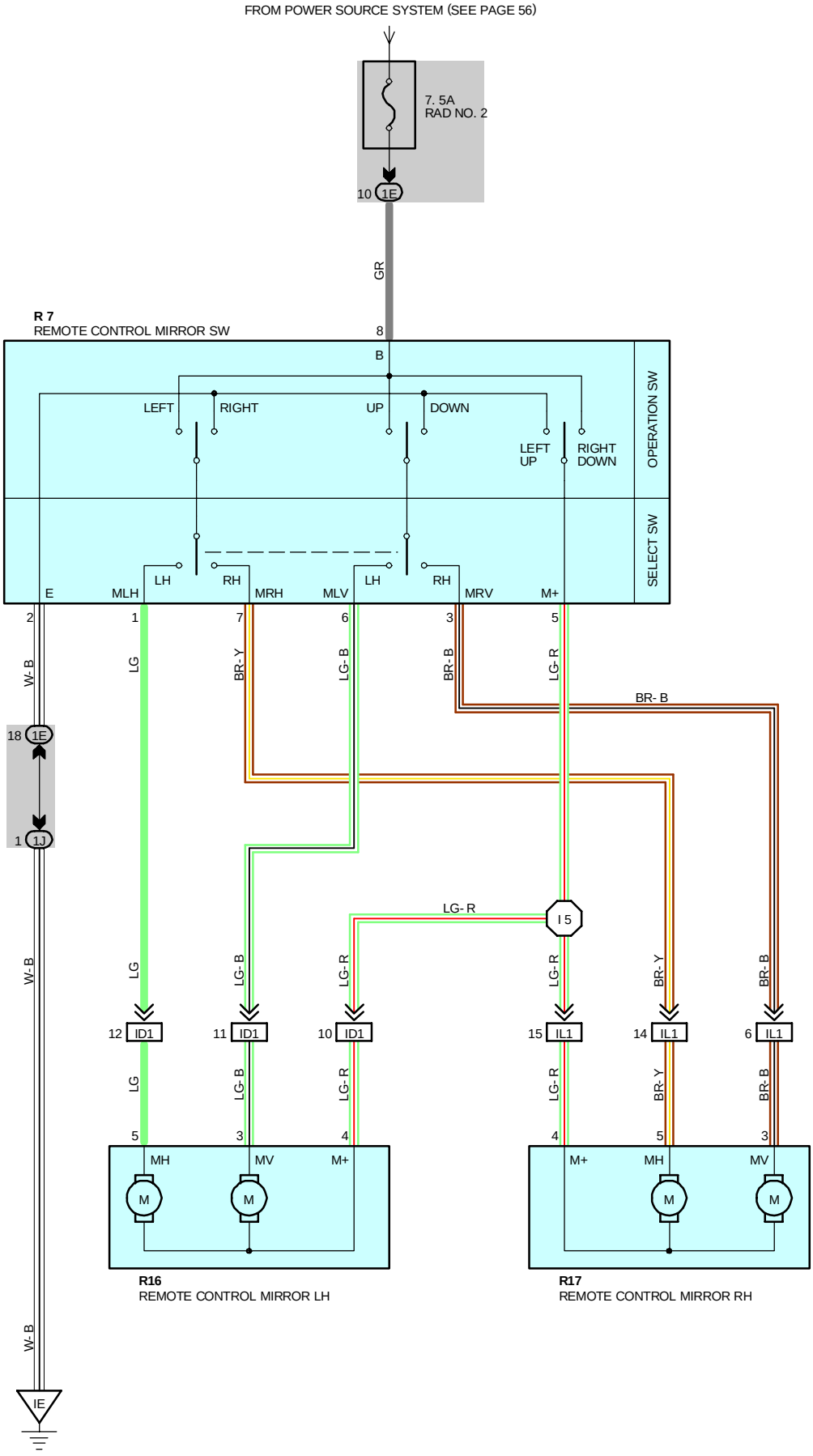
FROM POWER SOURCE SYSTEM (SEE PAGE 56)
7. 5A
RAD NO. 2
10 1E
GR
R 7
REMOTE CONTROL MIRROR SW
8
B
LEFT
RIGHT
UP
DOWN
LEFT UP
RIGHT DOWN
OPERATION SW
SELECT SW
LH
RH
LH
RH
E
MLH
MRH
MLV
MRV
M+
2
1
7
6
3
5
W-B
LG
BR-Y
LG-B
BR-B
LG-R
BR-B
18 1E
1 1J
LG-R
I5
W-B
LG
LG-B
LG-R
LG-R
BR-Y
BR-B
12 ID1
11 ID1
10 ID1
15 IL1
14 IL1
6 IL1
LG
LG-B
LG-R
LG-R
BR-Y
BR-B
5
3
4
4
5
3
MH
MV
M+
M+
MH
MV
M
M
M
M
R16
REMOTE CONTROL MIRROR LH
R17
REMOTE CONTROL MIRROR RH
W-B
IE

SERVICE HINTS

R7 REMOTE CONTROL MIRROR SW

8-GROUND : APPROX. **12** VOLTS WITH THE IGNITION SW AT **ACC** OR **ON** POSITION
5-2 : CONTINUITY WITH THE OPERATION SW AT **LEFT** OR **UP** POSITION
8-5 : CONTINUITY WITH THE OPERATION SW AT **RIGHT** OR **DOWN** POSITION
2-GROUND : ALWAYS CONTINUITY

: PARTS LOCATION

CODE	SEE PAGE	CODE	SEE PAGE	CODE	SEE PAGE
R7	29	R16	30	R17	30

: JUNCTION BLOCK AND WIRE HARNESS CONNECTOR

CODE	SEE PAGE	JUNCTION BLOCK AND WIRE HARNESS (CONNECTOR LOCATION)
1E	20	INSTRUMENT PANEL WIRE AND J/B NO. 1(LEFT KICK PANEL)
1J	20	COWL WIRE AND J/B NO. 1 (LEFT KICK PANEL)

: CONNECTOR JOINING WIRE HARNESS AND WIRE HARNESS

CODE	SEE PAGE	JOINING WIRE HARNESS AND WIRE HARNESS (CONNECTOR LOCATION)
ID1	36	FRONT DOOR LH WIRE AND INSTRUMENT PANEL WIRE (LEFT KICK PANEL)
IL1	38	FRONT DOOR RH WIRE AND INSTRUMENT PANEL WIRE (RIGHT KICK PANEL)

: GROUND POINTS

CODE	SEE PAGE	GROUND POINTS LOCATION
IE	36	LEFT KICK PANEL

: SPLICE POINTS

CODE	SEE PAGE	WIRE HARNESS WITH SPLICE POINTS	CODE	SEE PAGE	WIRE HARNESS WITH SPLICE POINTS
I5	38	INSTRUMENT PANEL WIRE			

R 7

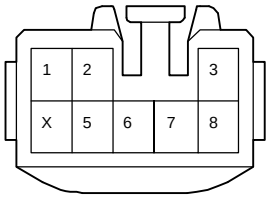

R 16

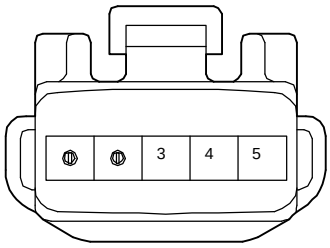

R 17

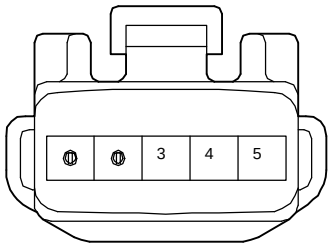

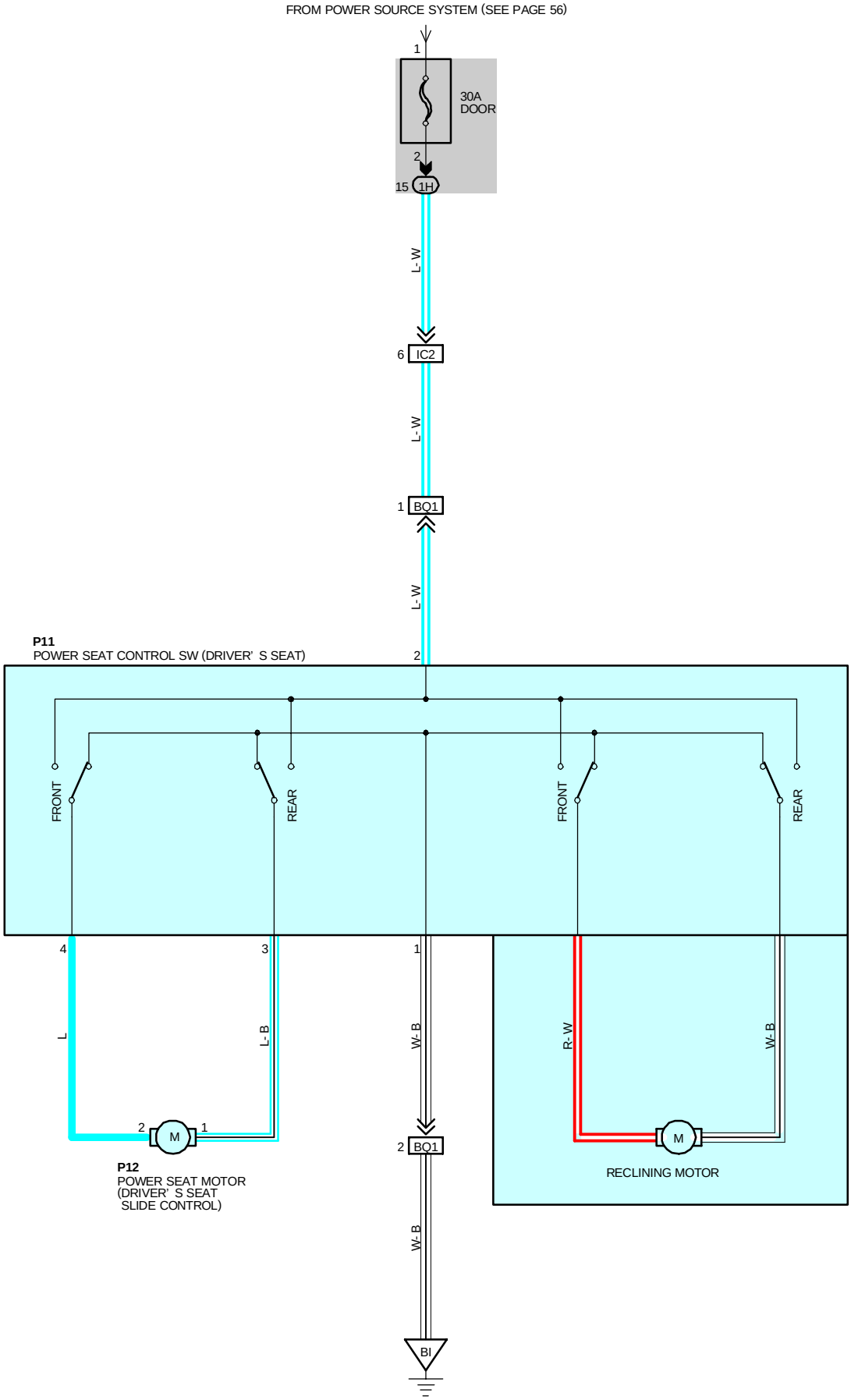
FROM POWER SOURCE SYSTEM (SEE PAGE 56)
1
30A
DOOR
2
15 1H
L- W
6 IC2
L- W
1 BQ1
L- W
P11
POWER SEAT CONTROL SW (DRIVER' S SEAT)
2
FRONT
REAR
FRONT
REAR
4
3
1
L
L- B
W- B
R- W
W- B
2
M
1
2 BQ1
M
P12
POWER SEAT MOTOR
(DRIVER' S SEAT
SLIDE CONTROL)
RECLINING MOTOR
W- B
BI

SERVICE HINTS

P11 POWER SEAT CONTROL SW (DRIVER'S SEAT)

2-GROUND : ALWAYS APPROX. **12** VOLTS
1-GROUND : ALWAYS CONTINUITY

: PARTS LOCATION

CODE	SEE PAGE	CODE	SEE PAGE	CODE	SEE PAGE
P11	31	P12	31		

: JUNCTION BLOCK AND WIRE HARNESS CONNECTOR

CODE	SEE PAGE	JUNCTION BLOCK AND WIRE HARNESS (CONNECTOR LOCATION)
1H	20	COWL WIRE AND J/B NO. 1 (LEFT KICK PANEL)

: CONNECTOR JOINING WIRE HARNESS AND WIRE HARNESS

CODE	SEE PAGE	JOINING WIRE HARNESS AND WIRE HARNESS (CONNECTOR LOCATION)
IC2	36	FLOOR NO. 2 WIRE AND COWL WIRE (LEFT KICK PANEL)
BQ1	42	FLOOR NO. 2 WIRE AND SEAT WIRE (UNDER THE FRONT LH SEAT)

: GROUND POINTS

CODE	SEE PAGE	GROUND POINTS LOCATION
B1	40	LEFT QUARTER PILLAR

P11

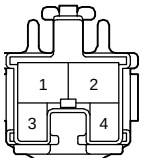

P12

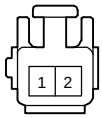

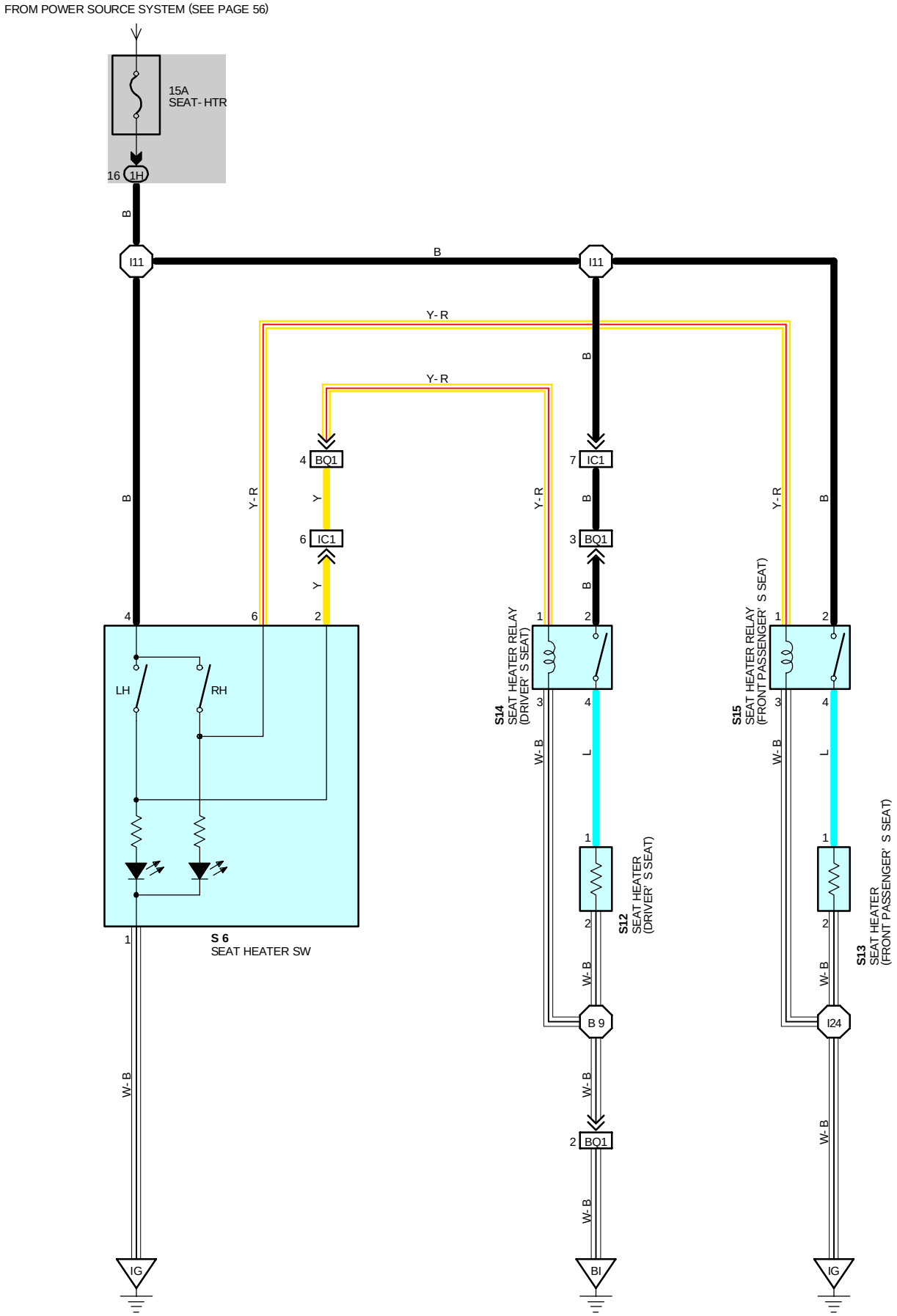
FROM POWER SOURCE SYSTEM (SEE PAGE 56)
15A
SEAT- HTR
16 1H
B
I11
B
I11
Y- R
Y- R
B
4 BQ1
Y
6 IC1
Y
7 IC1
B
3 BQ1
B
Y- R
Y- R
Y- R
B
B
4
6
2
1
2
LH
RH
S 6
SEAT HEATER SW
S14
SEAT HEATER RELAY
(DRIVER' S SEAT)
S15
SEAT HEATER RELAY
(FRONT PASSENGER' S SEAT)
3
4
3
4
W- B
L
W- B
L
1
2
1
2
S12
SEAT HEATER
(DRIVER' S SEAT)
S13
SEAT HEATER
(FRONT PASSENGER' S SEAT)
W- B
W- B
B 9
I24
W- B
W- B
2 BQ1
W- B
IG
BI
IG

SERVICE HINTS

S6 SEAT HEATER SW

4-GROUND ; APPROX. **12** VOLTS WITH THE IGNITION SW AT **ON** POSITION
1-GROUND : ALWAYS CONTINUITY

: PARTS LOCATION

CODE	SEE PAGE	CODE	SEE PAGE	CODE	SEE PAGE
S6	29	S13	31	S15	31
S12	31	S14	31		

: JUNCTION BLOCK AND WIRE HARNESS CONNECTOR

CODE	SEE PAGE	JUNCTION BLOCK AND WIRE HARNESS (CONNECTOR LOCATION)
1H	20	COWL WIRE AND J/B NO. 1 (LEFT KICK PANEL)

: CONNECTOR JOINING WIRE HARNESS AND WIRE HARNESS

CODE	SEE PAGE	JOINING WIRE HARNESS AND WIRE HARNESS (CONNECTOR LOCATION)
IC1	36	FLOOR NO. 2 WIRE AND COWL WIRE (LEFT KICK PANEL)
BQ1	42	FLOOR NO. 2 WIRE AND SEAT WIRE (UNDER THE FRONT LH SEAT)

: GROUND POINTS

CODE	SEE PAGE	GROUND POINTS LOCATION
IG	36	RIGHT KICK PANEL
BI	40	LEFT QUARTER PILLAR

: SPLICE POINTS

CODE	SEE PAGE	WIRE HARNESS WITH SPLICE POINTS	CODE	SEE PAGE	WIRE HARNESS WITH SPLICE POINTS
I11	38	COWL WIRE	B9	42	SEAT WIRE
I24					

S6 BLACK

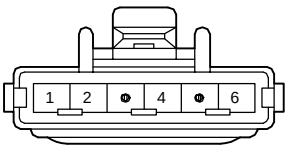

S12 BLUE

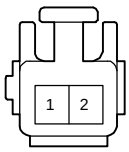

S13 BLUE

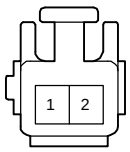

S14

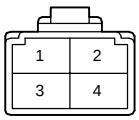

S15

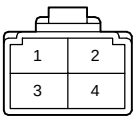

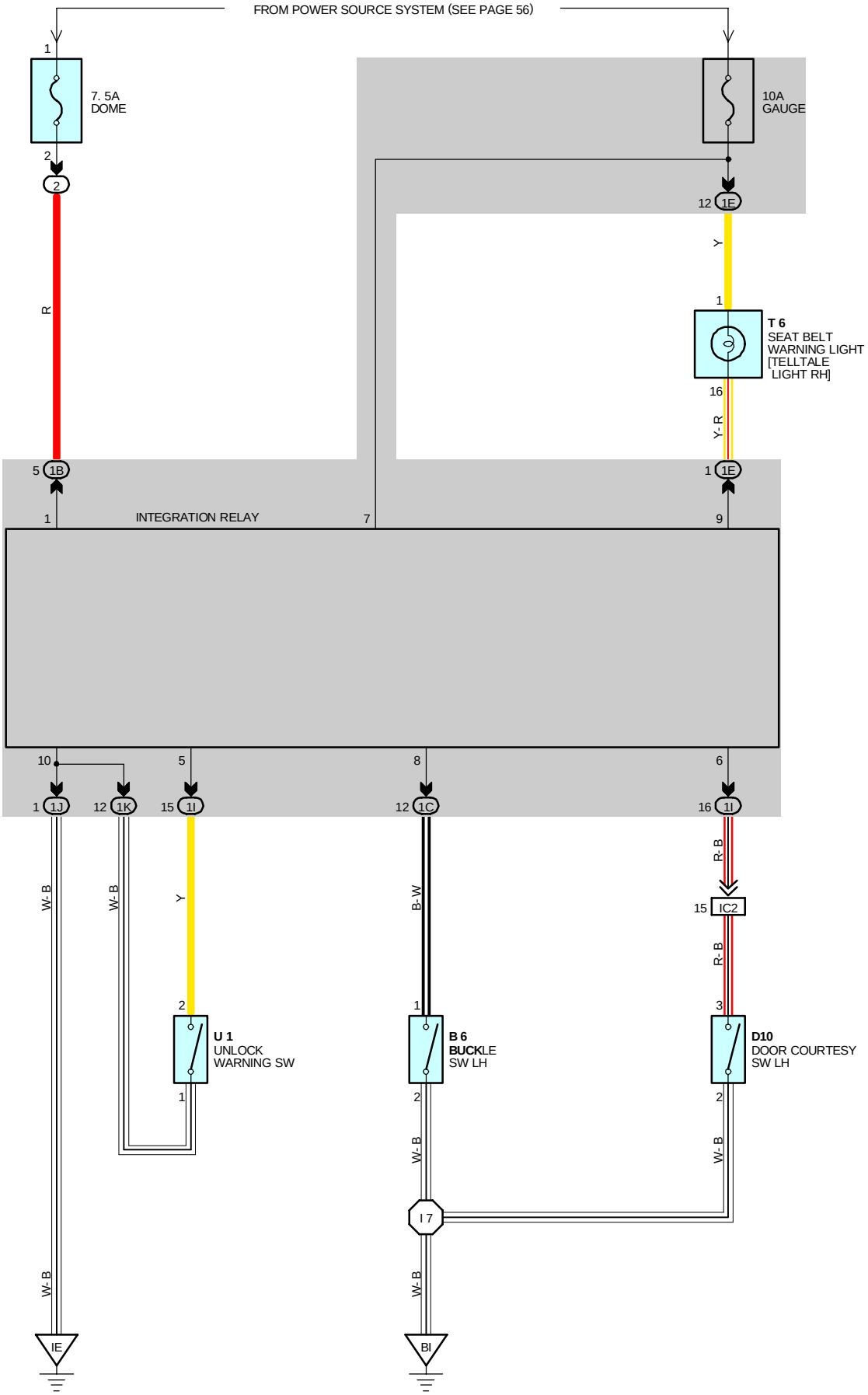
FROM POWER SOURCE SYSTEM (SEE PAGE 56)
7. 5A
DOME
10A
GAUGE
INTEGRATION RELAY
T 6
SEAT BELT
WARNING LIGHT
[TELLTALE
LIGHT RH]
U 1
UNLOCK
WARNING SW
B 6
BUCKLE
SW LH
D10
DOOR COURTESY
SW LH
IC2
I 7
IE
BI
R
Y
Y-R
W-B
R-B
B-W

SYSTEM OUTLINE

CURRENT ALWAYS FLOWS TO **TERMINAL 1** OF THE INTEGRATION RELAY THROUGH **DOME** FUSE.

1. SEAT BELT WARNING SYSTEM

WHEN THE IGNITION SW IS TURNED ON, CURRENT FLOWS FROM THE GAUGE FUSE TO **TERMINAL 7** OF THE INTEGRATION RELAY. AT THE SAME TIME, CURRENT FLOWS TO **TERMINAL 9** OF THE RELAY FROM THE **GAUGE** FUSE THROUGH THE SEAT BELT WARNING LIGHT. THIS CURRENT ACTIVATES THE INTEGRATION RELAY AND CURRENT FLOWING THROUGH THE WARNING LIGHT FLOW FROM **TERMINAL 9** OF THE RELAY → **TERMINAL 10** → **GROUND**, CAUSING THE WARNING LIGHT TO LIGHT UP. A BUCKLE SW OFF SIGNAL IS INPUT TO **TERMINAL 8** OF THE RELAY, THE CURRENT FLOWING TO **TERMINAL 7** OF THE RELAY FLOWS THROUGH **TERMINAL 10** → **GROUND** AND THE SEAT BELT WARNING BUZZER SOUNDS FOR APPROX. **4-8** SECONDS. HOWEVER, IF THE SEAT BELT IS PUT ON DURING THIS PERIOD (WHILE THE BUZZER IS SOUNDING), SIGNAL INPUT TO **TERMINAL 8** OF RELAY STOPS AND THE CURRENT FLOW FROM **TERMINAL 7** OF THE RELAY → **TERMINAL 10** → **GROUND** IS CUT, CAUSING THE BUZZER TO STOP.

2. UNLOCK WARNING SYSTEM

WITH THE IGNITION KEY INSERTED IN THE KEY CYLINDER (UNLOCK SW ON), THE IGNITION SW STILL OFF AND DRIVER'S DOOR OPENS (DOOR COURTESY SW ON), WHEN A SIGNAL IS INPUT TO **TERMINAL 6** OF THE RELAY, THE INTEGRATION RELAY OPERATES, CURRENT FLOWS FROM **TERMINAL 7** OF THE RELAY → **TERMINAL 10** → **GROUND** AND UNLOCK WARNING BUZZER SOUNDS.

SERVICE HINTS

B6 BUCKLE SW LH

1-2 : CLOSED WITH THE DRIVER'S SEAT BELT IN USE

D10 DOOR COURTESY SW LH

3-2 : CLOSED WITH THE LH DOOR OPEN

U1 UNLOCK WARNING SW

2-1 : CLOSED WITH THE IGNITION KEY IN CYLINDER

INTEGRATION RELAY

10-GROUND : ALWAYS CONTINUITY
6-GROUND : CONTINUITY WITH THE DRIVER'S DOOR OPEN
5-GROUND : CONTINUITY WITH THE IGNITION KEY IN CYLINDER
8-GROUND : CONTINUITY WITH THE DRIVER'S SEAT BELT IN USE
9-GROUND : **0** VOLTS WITH THE IGNITION SW ON AND BUCKLE SW OFF
1-GROUND : ALWAYS APPROX. **12** VOLTS

: PARTS LOCATION

CODE	SEE PAGE	CODE	SEE PAGE	CODE	SEE PAGE
B6	28	T6	29		
D10	30	U1	29		

: RELAY BLOCKS

CODE	SEE PAGE	RELAY BLOCKS (RELAY BLOCK LOCATION)
2	22	R/B NO. 2 (ENGINE COMPARTMENT LEFT)

: JUNCTION BLOCK AND WIRE HARNESS CONNECTOR

CODE	SEE PAGE	JUNCTION BLOCK AND WIRE HARNESS (CONNECTOR LOCATION)
1B	20	ENGINE ROOM MAIN WIRE AND J/B NO. 1 (LEFT KICK PANEL)
1C	20	FLOOR NO. 2 WIRE AND J/B NO. 1 (LEFT KICK PANEL)
1E	20	INSTRUMENT PANEL WIRE AND J/B NO. 1 (LEFT KICK PANEL)
1I	20	COWL WIRE AND J/B NO. 1 (LEFT KICK PANEL)
1J		
1K		

: CONNECTOR JOINING WIRE HARNESS AND WIRE HARNESS

CODE	SEE PAGE	JOINING WIRE HARNESS AND WIRE HARNESS (CONNECTOR LOCATION)
IC2	36	FLOOR NO. 2 WIRE AND COWL WIRE (LEFT KICK PANEL)

: GROUND POINTS

CODE	SEE PAGE	GROUND POINTS LOCATION
IE	36	LEFT KICK PANEL
BI	40	LEFT QUARTER PILLAR

: SPLICE POINTS

CODE	SEE PAGE	WIRE HARNESS WITH SPLICE POINTS	CODE	SEE PAGE	WIRE HARNESS WITH SPLICE POINTS
I7	38	FLOOR NO. 2 WIRE			

B 6

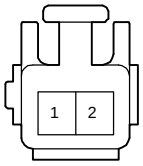

D10

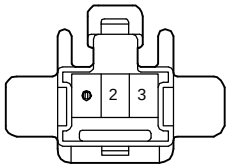

T 6

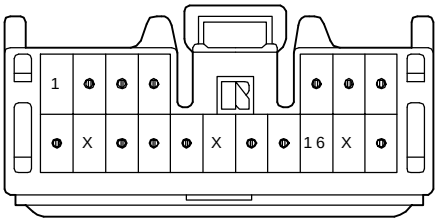

U 1

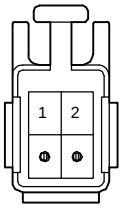

C14 BLACK

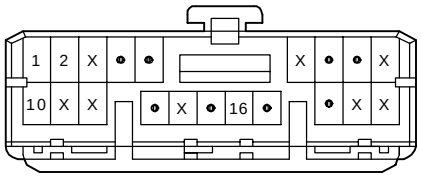

R15

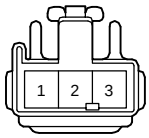

W 1 BLACK

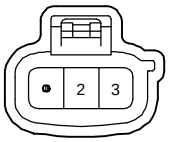

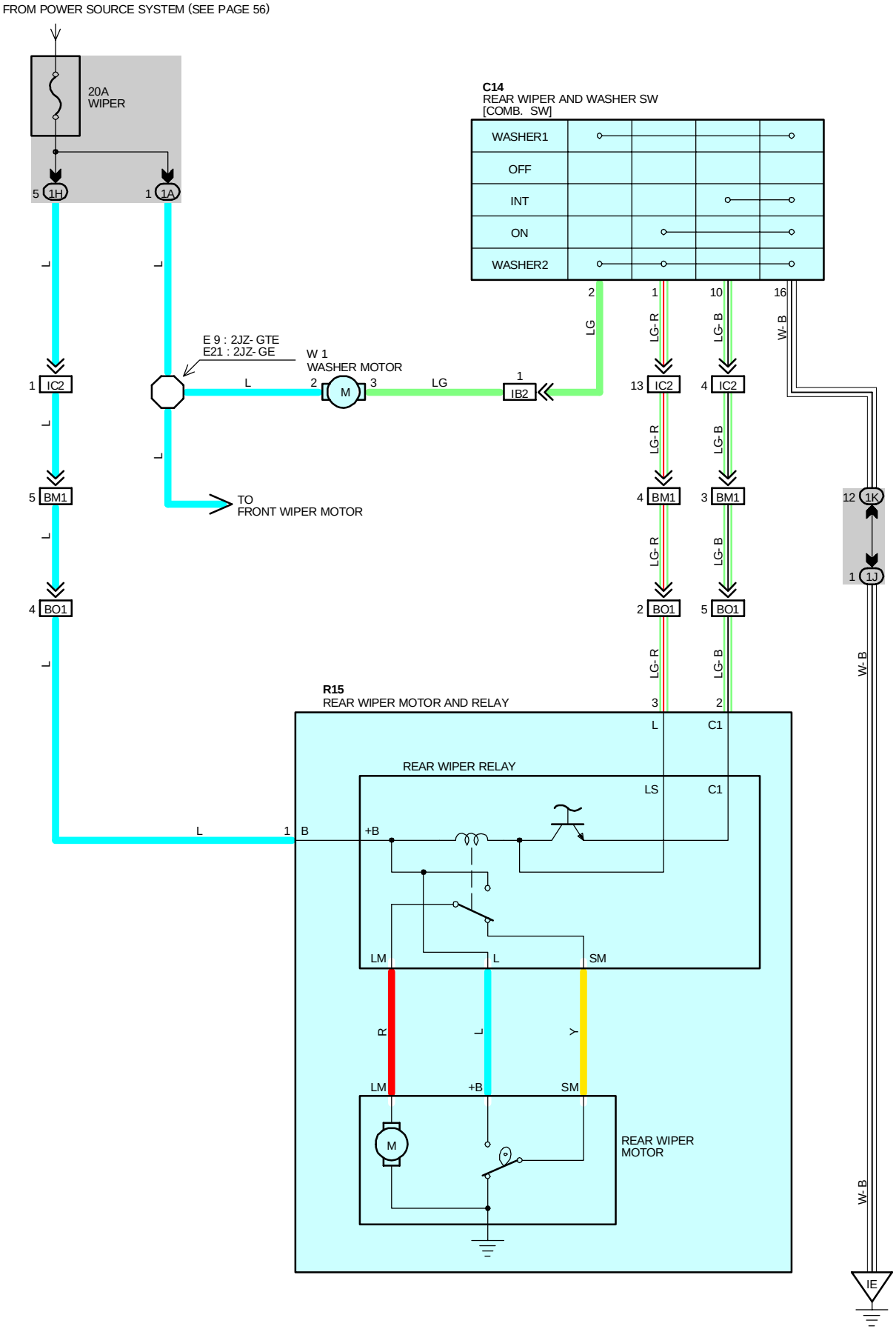
FROM POWER SOURCE SYSTEM (SEE PAGE 56)
20A
WIPER
5 1H
1 1A
C14
REAR WIPER AND WASHER SW
[COMB. SW]
WASHER1
OFF
INT
ON
WASHER2
2
1
10
16
LG
LG-R
LG-B
W-B
E 9 : 2JZ- GTE
E21 : 2JZ- GE
W 1
WASHER MOTOR
1 IC2
L
2
M
3
LG
1
IB2
13 IC2
4 IC2
5 BM1
4 BM1
3 BM1
12 1K
1 1J
TO
FRONT WIPER MOTOR
4 BO1
2 BO1
5 BO1
R15
REAR WIPER MOTOR AND RELAY
3
2
L
C1
REAR WIPER RELAY
LS
C1
1
B
+B
LM
L
SM
R
L
Y
LM
+B
SM
M
REAR WIPER
MOTOR
W-B
W-B
IE

SYSTEM OUTLINE

WHEN THE IGNITION SW IS TURNED ON, CURRENT FLOWS TO **TERMINAL 2** OF THE WASHER MOTOR, **TERMINAL 1** OF THE REAR WIPER MOTOR AND RELAY THROUGH THE **WIPER** FUSE.

1. REAR WIPER NORMAL OPERATION

WITH THE IGNITION SW TURNED ON AND REAR WIPER AND WASHER SW TURNED ON, THE CURRENT FLOWING TO **TERMINAL 1** OF THE REAR WIPER RELAY FLOWS TO **TERMINAL 3** OF THE RELAY → **TERMINAL 1** OF THE REAR WIPER AND WASHER SW → **TERMINAL 16** → TO **GROUND**. THUS, THE RELAY COIL IS ACTIVATED AND THE CURRENT TO **TERMINAL 1** OF THE RELAY FLOWS TO → **TERMIANL LH** → **TERMINAL LH** OF THE REAR WIPER MOTOR → MOTOR → TO **GROUND** AND CAUSES THE MOTOR TO OPERATE THE WIPER.

2. REAR WIPER INTERMITTENT OPERATION

WHEN THE IGNITION SW IS ON AND THE REAR WIPER AND WASHER SW IS TURNED TO **INT** POSITION, CURRENT FLOWING TO **TERMINAL 1** OF THE REAR WIPER MOTOR AND RELAY FLOWS TO **TERMINAL 2** OF THE RELAY → **TERMINAL 10** OF THE REAR WIPER AND WASHER SW → **TERMINAL 16** → **GROUND**.

THIS CAUSES THE MOTOR TO OPERATE (THE POINT CHANGES) AND THE INTERMITTENT CIRCUIT OF THE RELAY OPERATES. INTERMITTENT OPERATION OF THE CIRCUIT IS CONTROLLED BY THE CHANGING AND DISCHARGING OF THE CONDENSER INSTALLED INSIDE THE RELAY.

3. WASHER OPERATION

WITH THE IGNITION SW TURNED ON AND THE REAR WIPER AND WASHER SW TURNED TO **ON** POSITION, WHEN THE WIPER SW IS TURNED FURTHER, THE CURRENT FLOWING TO **TERMINAL 2** OF THE WASHER MOTOR FLOWS TO **TERMINAL 3** OF THE MOTOR → **TERMINAL 2** OF THE REAR WIPER AND WASHER SW → **TERMINAL 16** → TO **GROUND**, SO THAT THE WASHER MOTOR ROTATES AND THE WINDOW WASHER EJECTS THE SPRAY, ONLY WHILE THE SWITCH IS FULLY TURNED.

WHEN THE WIPER SW IS OFF AND THEN TURNED TO WASHER ON (WIPER OFF SIDE), ONLY THE WASHER OPERATES.

SERVICE HINTS

W1 WASHER MOTOR

2-GROUND : APPROX. **12** VOLTS WITH THE IGNITION SW AT **ON** POSITION
3-GROUND : CONTINUITY WITH THE WASHER SW TURNED ON

R15 REAR WIPER MOTOR AND RELAY

1-GROUND : APPROX. **12** VOLTS WITH THE IGNITION SW AT **ON** POSITION
2-GROUND : CONTINUITY WITH THE REAR WIPER SW AT **INT** POSITION
3-GROUND : CONTINUITY WITH THE REAR WIPER SW AT **ON** POSITION

: PARTS LOCATION

CODE	SEE PAGE	CODE	SEE PAGE	CODE	SEE PAGE
C14	28	W1	25 (2JZ-GTE)		
R15	30		27 (2JZ-GE)		

: JUNCTION BLOCK AND WIRE HARNESS CONNECTOR

CODE	SEE PAGE	JUNCTION BLOCK AND WIRE HARNESS (CONNECTOR LOCATION)
1A	20	ENGINE ROOM MAIN WIRE AND J/B NO. 1 (LEFT KICK PANEL)
1H	20	COWL WIRE AND J/B NO. 1 (LEFT KICK PANEL)
1J		
1K		

: CONNECTOR JOINING WIRE HARNESS AND WIRE HARNESS

CODE	SEE PAGE	JOINING WIRE HARNESS AND WIRE HARNESS (CONNECTOR LOCATION)
IB2	36	ENGINE ROOM MAIN WIRE AND COWL WIRE (LET KICK PANEL)
IC2	36	FLOOR NO. 2 WIRE AND COWL WIRE (LEFT KICK PANEL)
BM1	40	BACK DOOR NO. 1 WIRE AND FLOOR NO. 2 WIRE (LEFT SIDE OF PACKAGE TRAY TRIM)
BO1	40	BACK DOOR NO. 2 WIRE AND BACK DOOR NO. 1 WIRE (BACK DOOR UPPER LEFT)

: GROUND POINTS

CODE	SEE PAGE	GROUND POINTS LOCATION
IE	36	LEFT KICK PANEL

: SPLICE POINTS

CODE	SEE PAGE	WIRE HARNESS WITH SPLICE POINTS	CODE	SEE PAGE	WIRE HARNESS WITH SPLICE POINTS
E9	32	ENGINE ROOM MAIN WIRE	E21	34	ENGINE ROOM MAIN WIRE

NOTICE: When inspecting or repairing the SRS, perform the operation in accordance with the following precautionary instructions and the procedure and precautions in the Repair Manual for the applicable model year.

- Malfunction symptoms of the supplemental restraint system are difficult to confirm, so the diagnostic trouble codes become the most important source of information when troubleshooting.
  When troubleshooting the supplemental restraint system, always inspect the diagnostic trouble codes before disconnecting the battery.
- Work must be started after 90 seconds from the time the Ignition SW is set to the “LOCK” position and the negative (-) terminal cable is disconnected from the battery.
  (The supplemental restraint system is equipped with a back-up power source so that if work is started within 90 seconds of disconnecting the negative (-) terminal cable of the battery, the SRS may be activated.)
  When the negative (-) terminal cable is disconnected from the battery, memory of the clock and audio systems will be cancelled. So before starting work, make a record of the contents memorized by each memory system. When work is finished, reset the clock and audio system as before and adjust the clock.
  To avoid erasing the memory of each memory system, never use a back-up power supply from outside the vehicle.
- When removing the steering wheel pad or handling a new steering wheel pad, keep the pad upper surface facing upward. Also, lock the lock lever of the twin lock type connector at the rear of the pad and take care not to damage the connector.
  (Storing the pad with its metallic surface up may lead to a serious accident if the SRS inflates for some reason.)
- Always store a removed or new front passenger airbag assembly with the airbag door facing up. Storing the airbag assembly with the airbag door facing down could cause a serious accident if the airbag inflates.
- Store the steering wheel pad where the ambient temperature remains below 93°C (200°F), without high humidity and away from electrical noise.
- Never use SRS parts from another vehicle. When replacing SRS parts, replace them with new parts.
- Never disassemble and repair the steering wheel pad, front passenger airbag assembly, airbag sensor assembly.
- Before repairing the body, remove the airbag sensors if during repair shocks are likely to be applied to the sensors due to vibration of the body or direct tapping with tools or other parts.
- Do not reuse a steering wheel pad.
  After evaluating whether the airbag sensor assembly is damaged or not, decide whether or not to reuse it.
  (See the Repair Manual for the method for evaluating the airbag sensor assembly.)
- When troubleshooting the supplemental restraint system, use a high-impedance (Min. 10 kΩ/V) tester.
- The wire harness of the supplemental restraint system is integrated with the cowl wire harness assembly. The vehicle wiring harness exclusively for the airbag system is distinguished by corrugated yellow tubing, as are the connectors.
- Do not measure the resistance of the airbag squibs.
  (It is possible this will deploy the airbag and is very dangerous.)
- If the wire harness used in the supplemental restraint system is damaged, replace the whole wire harness assembly.
- INFORMATION LABELS (NOTICES) are attached to the periphery of the SRS components. Follow the instructions on the notices.

The SRS has connectors which possess the functions described below:

1. SRS ACTIVATION PREVENTION MECHANISM
   Each connector contains a short spring plate. When the connector is disconnected, the short spring plate automatically connects the power source and grounding terminals of the squib to preclude a potential difference between the terminals.

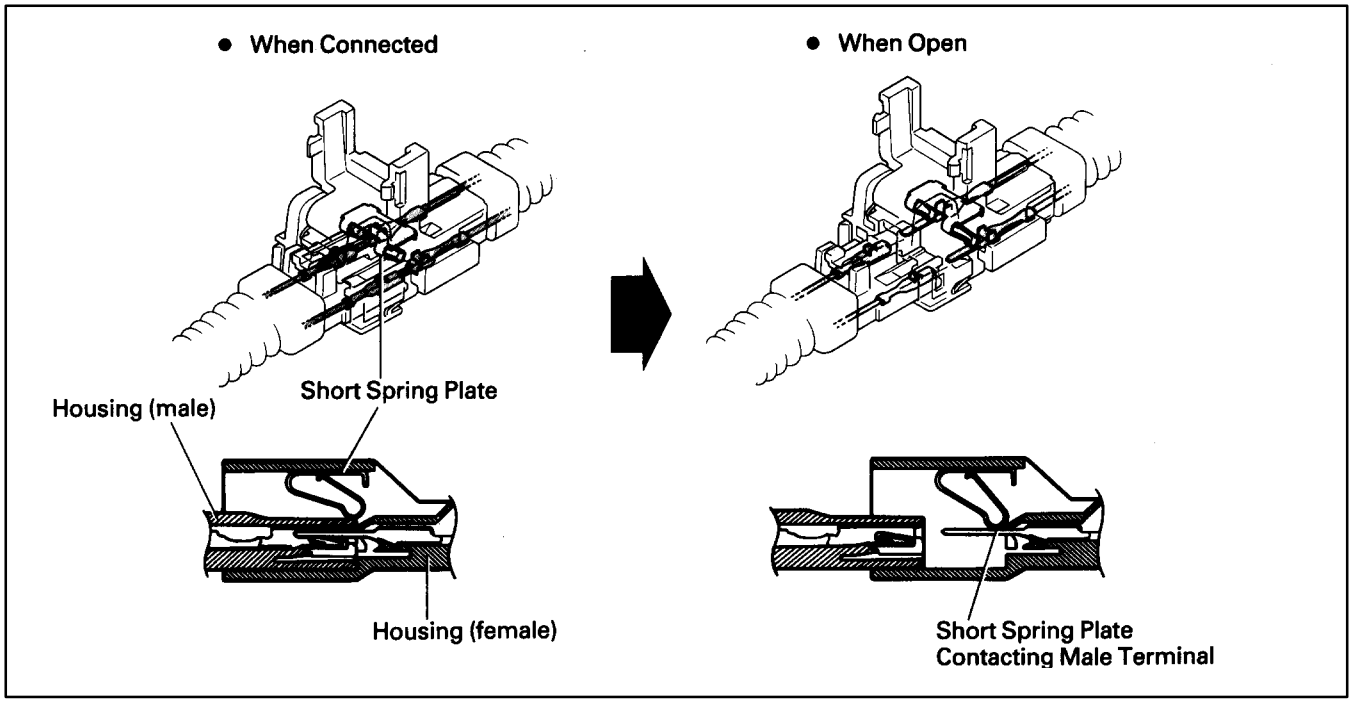

2. ELECTRICAL CONNECTION CHECK MECHANISM
   This mechanism is designed to electrically checks if connectors are connected correctly and completely.
   The electrical connection check mechanism is designed so that the disconnection detection pin connects with the diagnosis terminals when the connector housing lock is in to locked condition.

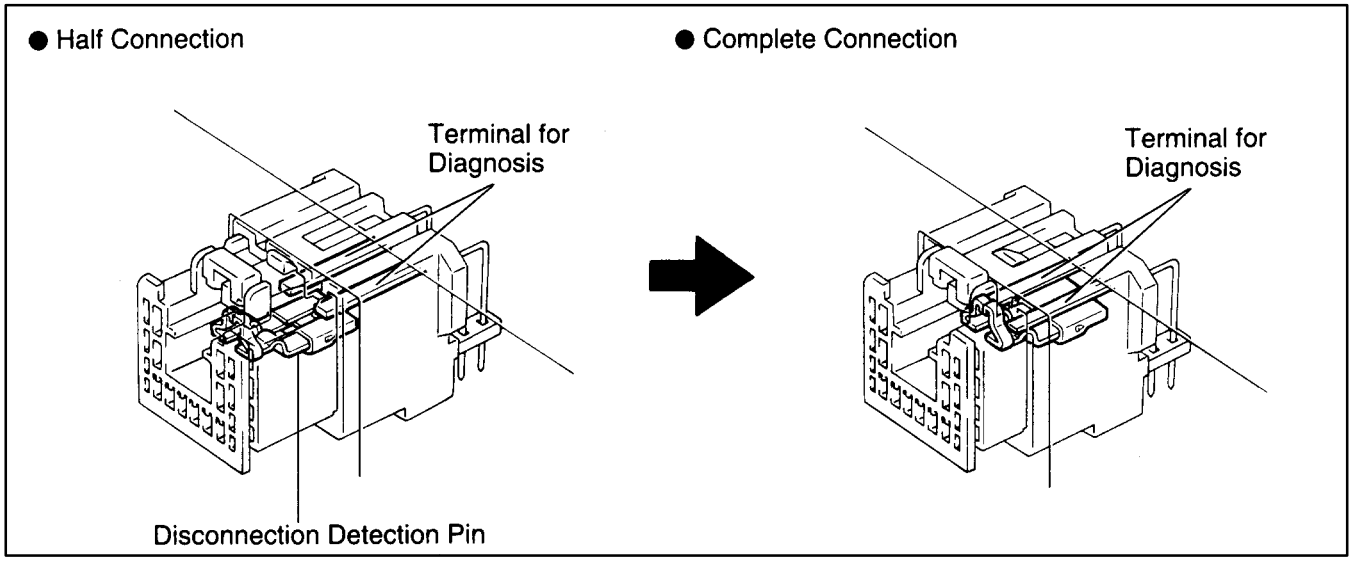

3. CONNECTOR TWIN-LOCK MECHANISM
With this mechanism connectors (male and female connectors) are locked by two locking devices to increase connection reliability. If the primary lock is incomplete, ribs interfere and prevent the secondary lock.

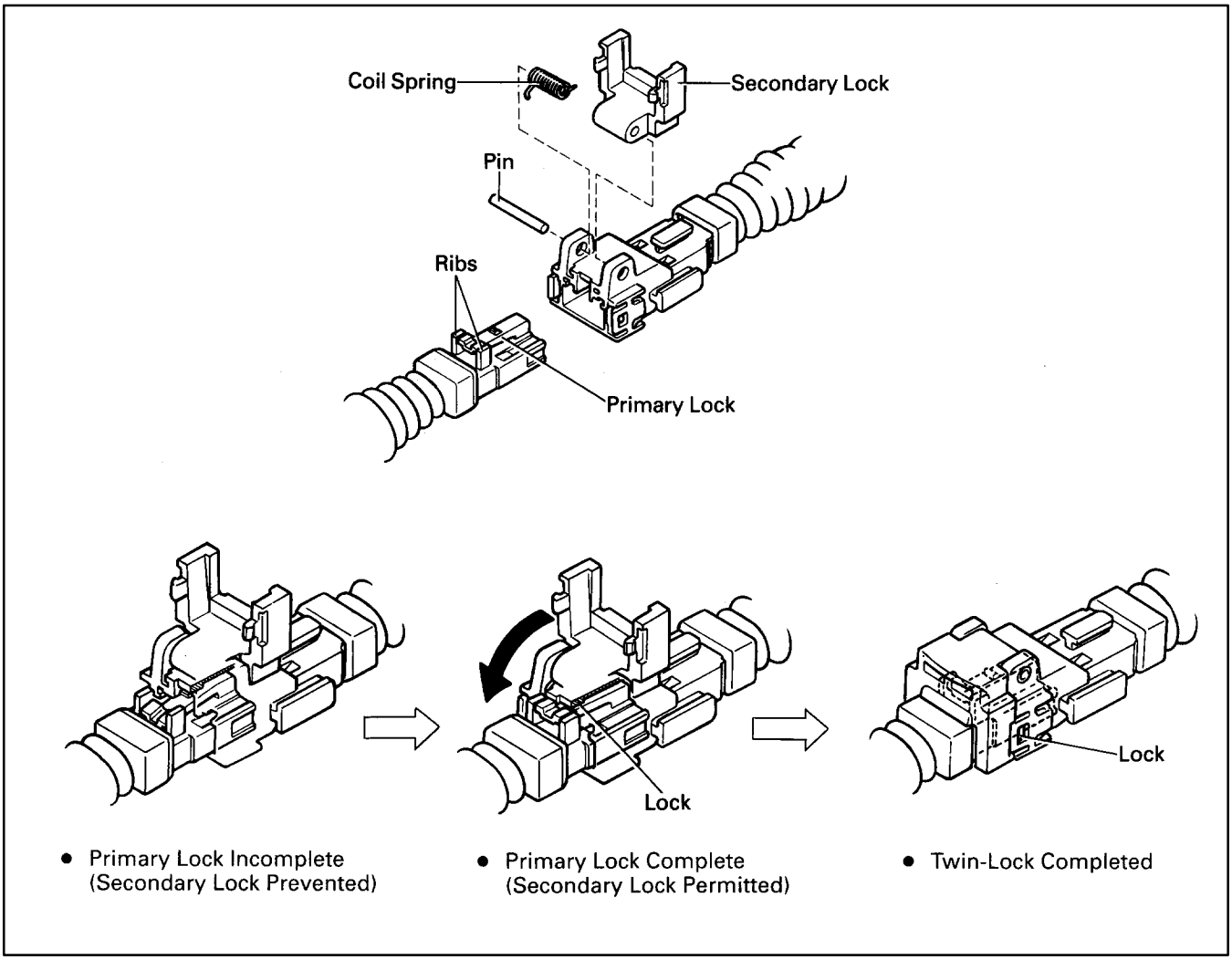

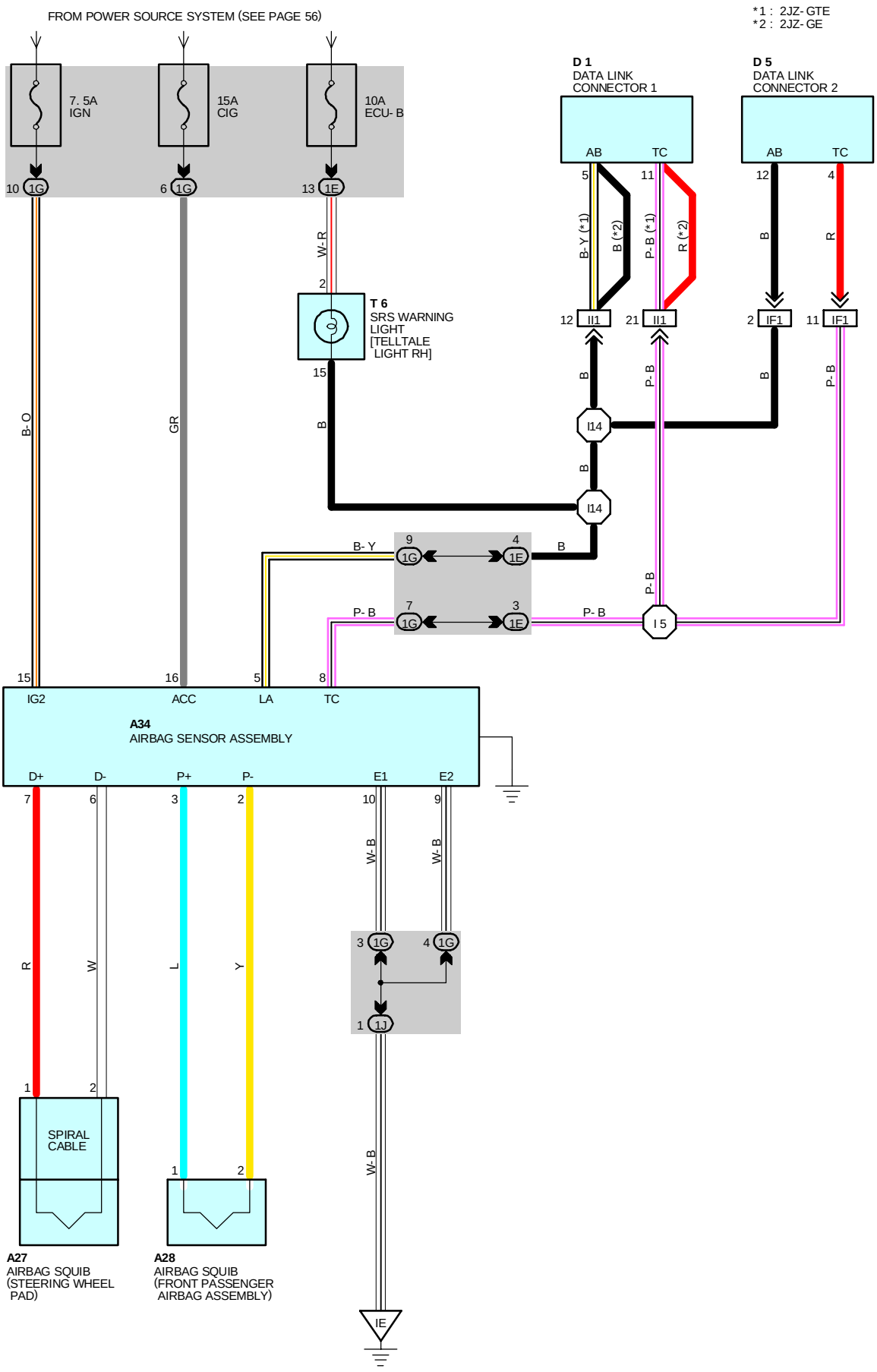
FROM POWER SOURCE SYSTEM (SEE PAGE 56)
*1 : 2JZ-GTE
*2 : 2JZ-GE
7. 5A IGN
15A CIG
10A ECU-B
D 1 DATA LINK CONNECTOR 1
D 5 DATA LINK CONNECTOR 2
T 6 SRS WARNING LIGHT [TELLTALE LIGHT RH]
A34 AIRBAG SENSOR ASSEMBLY
IG2
ACC
LA
TC
D+
D-
P+
P-
E1
E2
A27 AIRBAG SQUIB (STEERING WHEEL PAD)
A28 AIRBAG SQUIB (FRONT PASSENGER AIRBAG ASSEMBLY)
SPIRAL CABLE
IE

SYSTEM OUTLINE

THE SRS IS A DRIVER AND PASSENGER PROTECTION DEVICE WHICH HAS A SUPPLEMENTAL ROLE TO THE SEAT BELTS.
WHEN THE IGNITION SW IS TURNED TO ACC OR ON, THE CURRENT FROM THE **CIG** FUSE FLOWS TO **TERMINAL 16** OF THE AIRBAG SENSOR ASSEMBLY. ONLY WHEN THE IGNITION SW IS ON DOES THE CURRENT FROM THE **IGN** FUSE FLOW TO **TERMINAL 15** OF THE AIRBAG SENSOR ASSEMBLY.
IF AN ACCIDENT OCCURS WHILE DRIVING, DECELERATION CAUSED BY A FRONTAL IMPACT IS DETECTED BY THE SENSOR IN THE AIRBAG SENSOR ASSEMBLY, AND WHEN THE FRONTAL IMPACT EXCEEDS A SET LEVEL (WHEN THE SAFING SENSOR BUILT INTO THE AIRBAG SENSOR ASSEMBLY IS ON, THE FLOOR SENSOR BUILT INTO THE AIRBAG SENSOR ASSEMBLY IS ON AND THE AIRBAG SENSOR ASSEMBLY IS ON), THE CURRENT FROM THE **CIG** OR THE **IGN** FUSE FLOWS THROUGH THE AIRBAG SENSOR ASSEMBLY TO **TERMINALS 7** AND **3** OF THE AIRBAG SENSOR ASSEMBLY TO **TERMINAL 1** OF THE AIRBAG SQUIB → **TERMINAL 2** → **TERMINALS 6** AND **2** OF THE AIRBAG SENSOR ASSEMBLY → THE FLOOR SENSOR BUILT INTO THE AIRBAG SENSOR ASSEMBLY → **TERMINAL 9**, **TERMINAL 10** OR **BODY GROUND** → **GROUND**. WHEN THE SAFING SENSOR BUILT INTO THE AIRBAG SENSOR ASSEMBLY IS ON, AND FLOOR SENSOR BUILT INTO THE AIRBAG SENSOR ASSEMBLY IS ON, ONE OF THE ABOVE-MENTIONED CIRCUITS IS ACTIVATED SO THAT THE CURRENT FLOWS TO THE AIRBAG SQUIBS, CAUSING IT TO OPERATE.
THE AIRBAG STORED INSIDE THE STEERING WHEEL PAD IS INSTANTANEOUSLY EXPANDED TO SOFTEN THE SHOCK TO A DRIVER.
SIMULTANEOUSLY, THE AIRBAG STORED INSIDE THE PASSENGER'S INSTRUMENT PANEL IS INSTANTANEOUSLY EXPANDED TO SOFTEN THE SHOCK TO A PASSENGER.

: PARTS LOCATION

CODE	SEE PAGE	CODE	SEE PAGE	CODE	SEE PAGE
A27	28	D1	24 (2JZ-GTE)	T6	29
A28	28		26 (2JZ-GE)		
A34	28	D5	28		

: JUNCTION BLOCK AND WIRE HARNESS CONNECTOR

CODE	SEE PAGE	JUNCTION BLOCK AND WIRE HARNESS (CONNECTOR LOCATION)
1E	20	INSTRUMENT PANEL WIRE AND J/B NO. 1 (LEFT KICK PANEL)
1G	20	COWL WIRE AND J/B NO. 1 (LEFT KICK PANEL)
1J		

: CONNECTOR JOINING WIRE HARNESS AND WIRE HARNESS

CODE	SEE PAGE	JOINING WIRE HARNESS AND WIRE HARNESS (CONNECTOR LOCATION)
IF1	36	INSTRUMENT PANEL WIRE AND COWL WIRE (INSTRUMENT PANEL REINFORCEMENT LH)
II1	38	ENGINE WIRE AND INSTRUMENT PANEL WIRE (RIGHT KICK PANEL)

: GROUND POINTS

CODE	SEE PAGE	GROUND POINTS LOCATION
IE	36	LEFT KICK PANEL

: SPLICE POINTS

CODE	SEE PAGE	WIRE HARNESS WITH SPLICE POINTS	CODE	SEE PAGE	WIRE HARNESS WITH SPLICE POINTS
I5	38	INSTRUMENT PANEL WIRE	I14	38	INSTRUMENT WIRE

A27 YELLOW

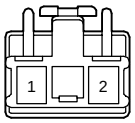

A28 YELLOW

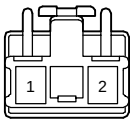

C 5 YELLOW

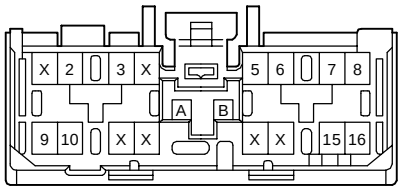

D 1 BLACK

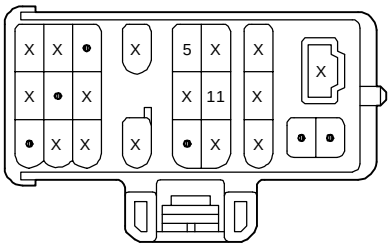

D 5 DARK GRAY

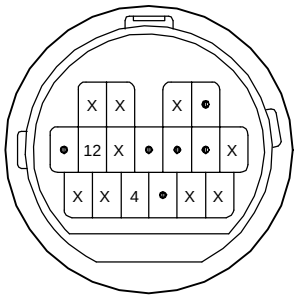

T 6

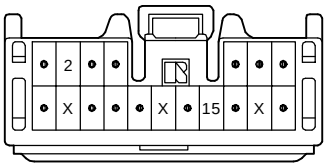

FROM POWER SOURCE SYSTEM (SEE PAGE 56)

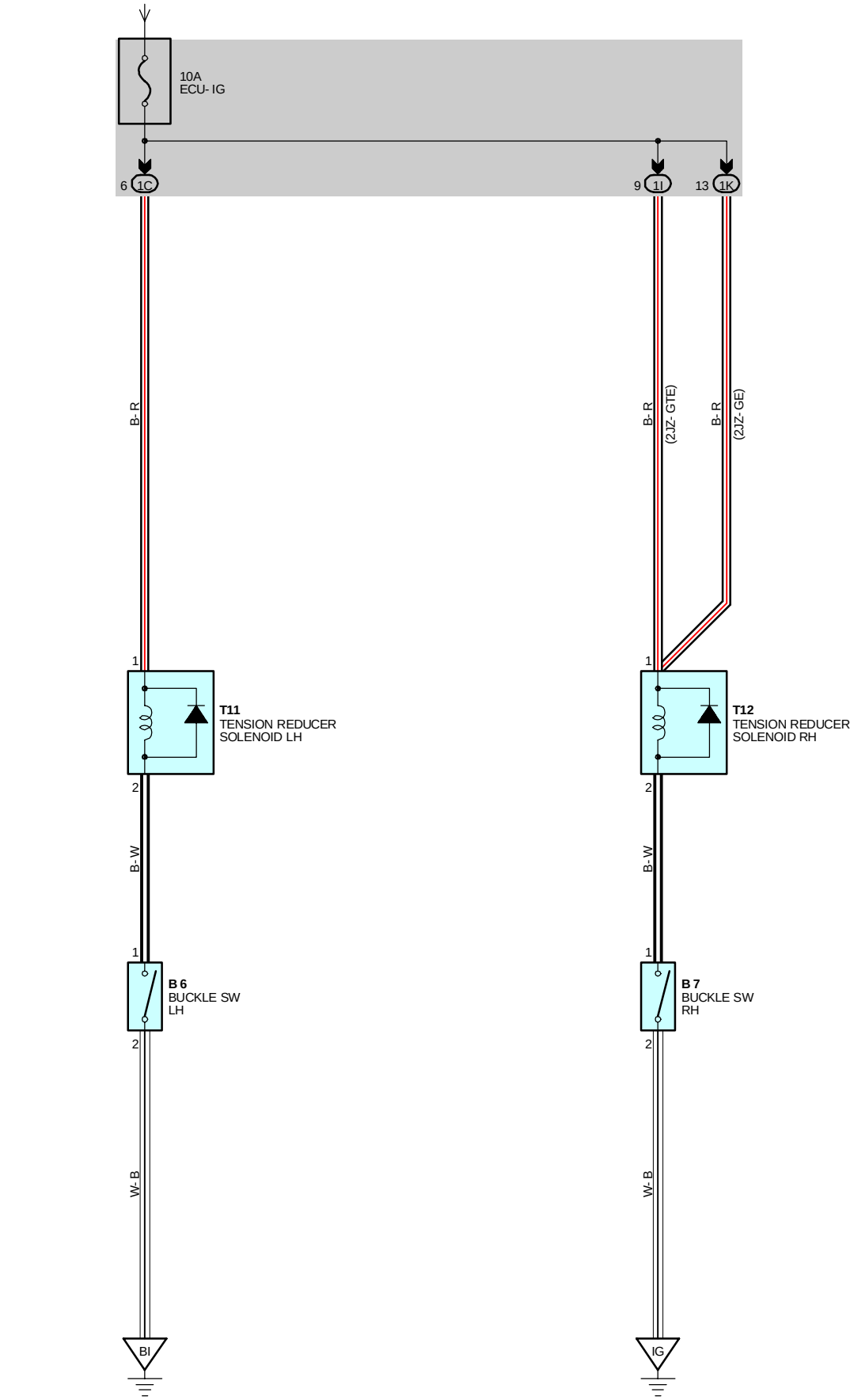

SERVICE HINTS

B6 BUCKLE SW LH

1-2 : CLOSED WITH THE DRIVER'S SEAT BELT IN USE

B7 BUCKLE SW RH

1-2 : CLOSED WITH THE FRONT PASSENGER'S SEAT BELT IN USE

T11, T12 TENSION REDUCER SOLENOID LH, RH

1-GROUND : APPROX. **12** VOLTS WITH THE IGNITION SW AT **ON** POSITION

: PARTS LOCATION

CODE	SEE PAGE	CODE	SEE PAGE	CODE	SEE PAGE
B6	28	T11	30		
B7	28	T12	30		

: JUNCTION BLOCK AND WIRE HARNESS CONNECTOR

CODE	SEE PAGE	JUNCTION BLOCK AND WIRE HARNESS (CONNECTOR LOCATION)
1C	20	FLOOR NO. 2 WIRE AND J/B NO. 1 (LEFT KICK PANEL)
1I	20	COWL WIRE AND J/B NO. 1 (LEFT KICK PANEL)
1K		

: GROUND POINTS

CODE	SEE PAGE	GROUND POINTS LOCATION
IG	36	RIGHT KICK PANEL
BI	40	LEFT QUARTER PILLAR

B 6

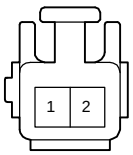

B 7

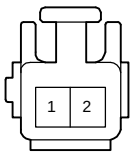

T11

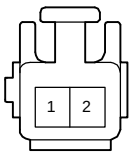

T12

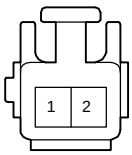

REAR WINDOW DEFOGGER AND MIRROR HEATER

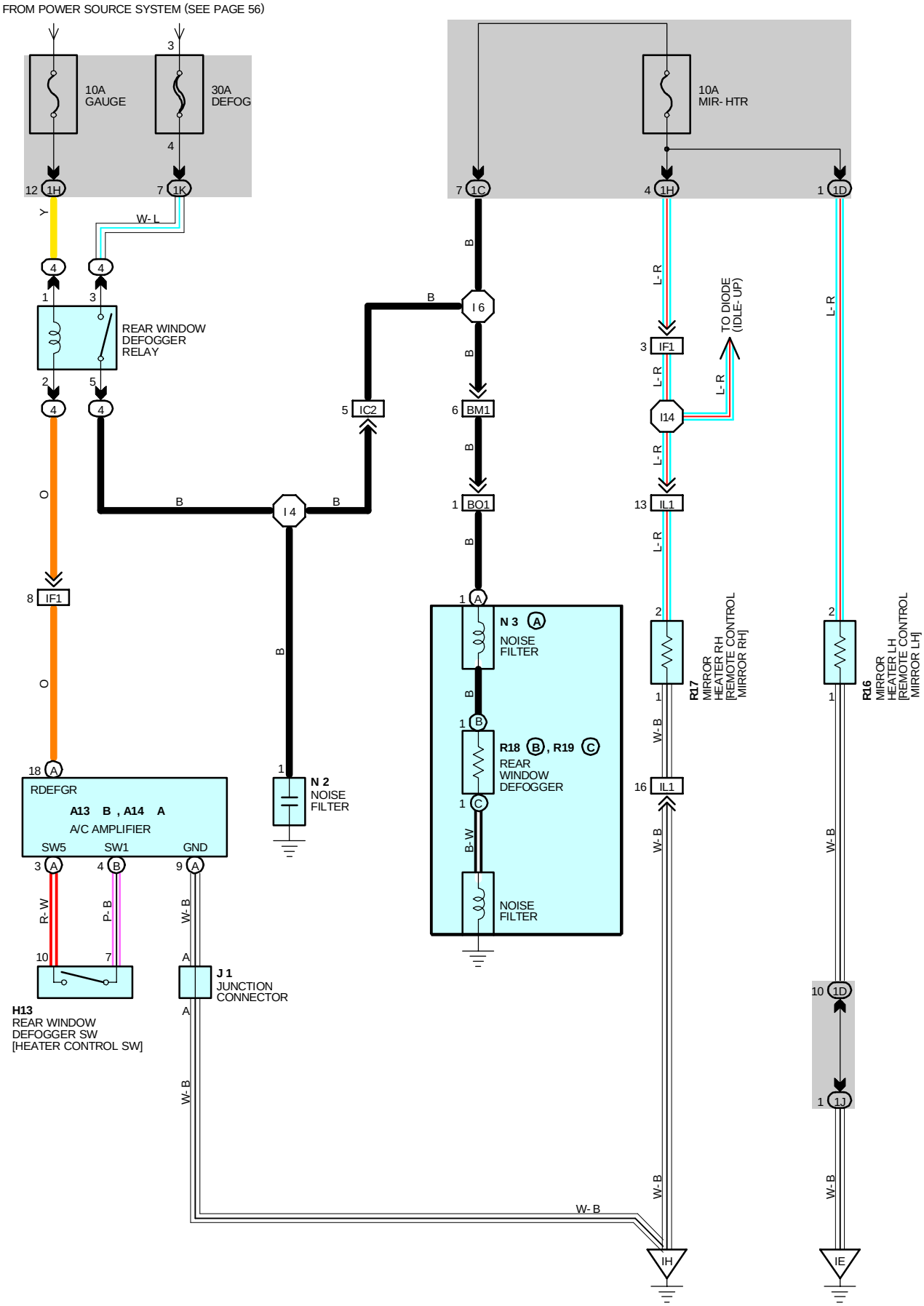

SERVICE HINTS

REAR WINDOW DEFOGGER RELAY

(4) 3- **(4)** 5 : CLOSED WITH THE IGNITION SW AT **ON** POSITION AND THE REAR WINDOW SW [HEATER CONTROL SW] **ON**

: PARTS LOCATION

CODE		SEE PAGE	CODE		SEE PAGE	CODE		SEE PAGE
A13	B	28	N 2		29	R18	B	30
A14	A	28	N 3	A	30	R19	C	30
H13		29	R16		30			
J 1		29	R17		30			

: RELAY BLOCKS

CODE	SEE PAGE	RELAY BLOCKS (RELAY BLOCK LOCATION)
4	23	R/B NO. 4 (LEFT KICK PANEL)

: JUNCTION BLOCK AND WIRE HARNESS CONNECTOR

CODE	SEE PAGE	JUNCTION BLOCK AND WIRE HARNESS (CONNECTOR LOCATION)
1C	20	FLOOR NO. 2 WIRE AND J/B NO. 1 (LEFT KICK PANEL)
1D	20	FRONT DOOR LH WIRE AND J/B NO. 1 (LEFT KICK PANEL
1H	20	COWL WIRE AND J/B NO. 1 (LEFT KICK PANEL)
1J		
1K		

: CONNECTOR JOINING WIRE HARNESS AND WIRE HARNESS

CODE	SEE PAGE	JOINING WIRE HARNESS AND WIRE HARNESS (CONNECTOR LOCATION)
IC2	36	FLOOR NO. 2 WIRE AND COWL WIRE (LEFT KICK PANEL)
IF1	36	INSTRUMENT PANEL WIRE AND COWL WIRE (INSTRUMENT PANEL REINFORCEMENT LH)
IL1	38	FRONT DOOR RH WIRE AND INSTRUMENT PANEL WIRE (RIGHT KICK PANEL)
BM1	40	BACK DOOR NO. 1 WIRE AND FLOOR NO. 2 WIRE (LEFT SIDE OF PACKAGE TRAY TRIM)
BO1	40	BACK DOOR NO. 2 WIRE AND BACK DOOR NO. 1 WIRE (BACK DOOR UPPER LEFT)

: GROUND POINTS

CODE	SEE PAGE	GROUND POINTS LOCATION
IE	36	LEFT KICK PANEL
IH	36	RIGHT KICK PANEL

: SPLICE POINTS

CODE	SEE PAGE	WIRE HARNESS WITH SPLICE POINTS	CODE	SEE PAGE	WIRE HARNESS WITH SPLICE POINTS
I 4	38	COWL WIRE	I14	38	INSTRUMENT PANEL WIRE
I 6	38	FLOOR NO. 2 WIRE			

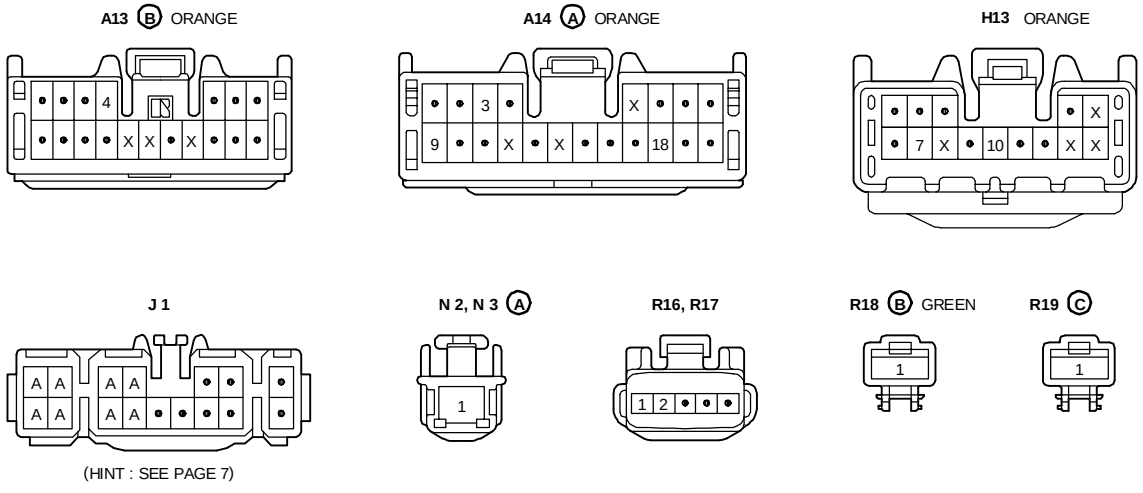

(HINT : SEE PAGE 7)

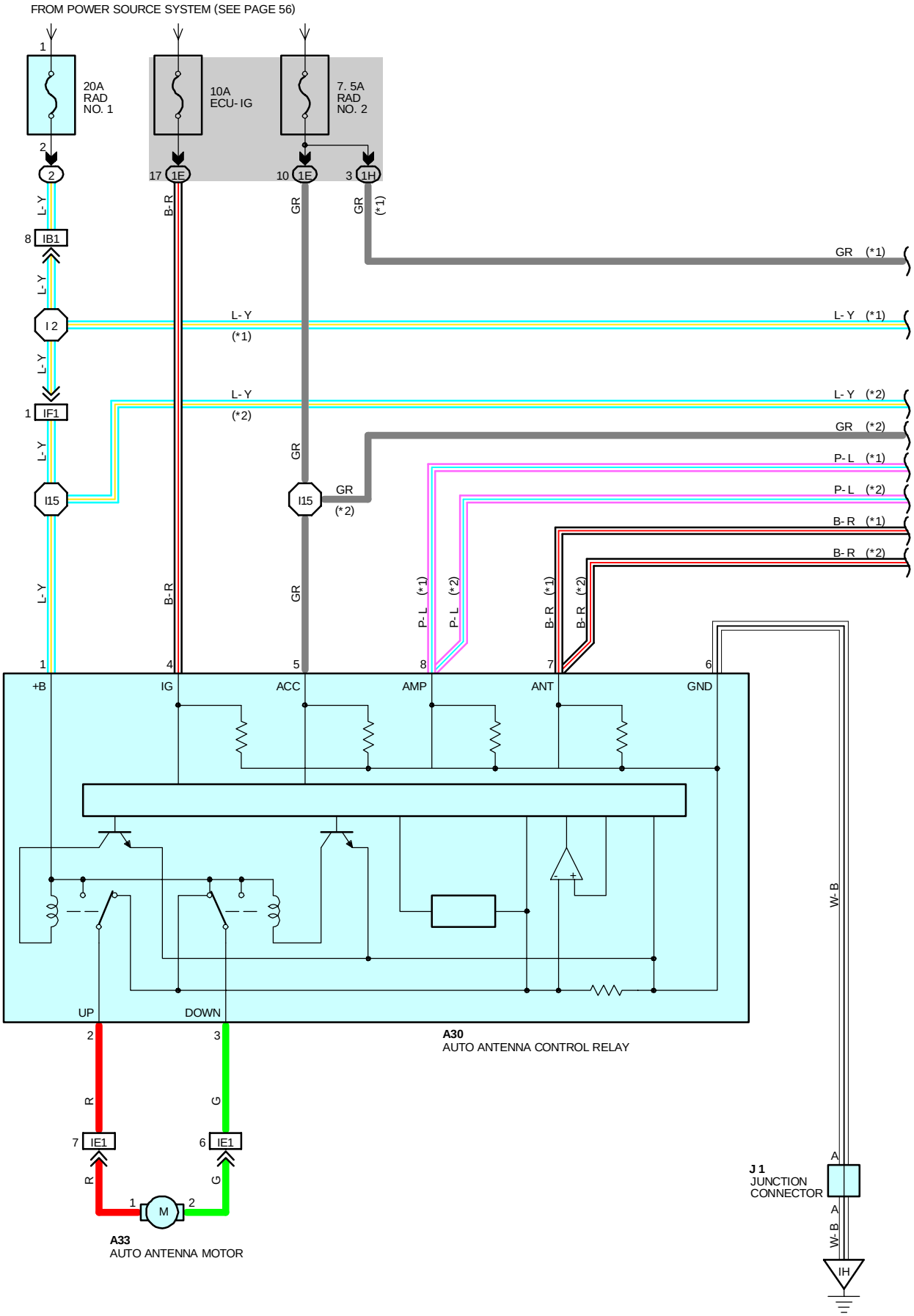
FROM POWER SOURCE SYSTEM (SEE PAGE 56)
20A RAD NO. 1
10A ECU-IG
7. 5A RAD NO. 2
17 1E
10 1E
3 1H
8 IB1
I 2
1 IF1
I15
I15
GR (*2)
GR (*1)
L-Y (*1)
L-Y (*2)
P-L (*1)
P-L (*2)
B-R (*1)
B-R (*2)
+B
IG
ACC
AMP
ANT
GND
UP
DOWN
A30
AUTO ANTENNA CONTROL RELAY
W-B
J 1
JUNCTION CONNECTOR
IH
IE1
IE1
M
A33
AUTO ANTENNA MOTOR

*1 : W/ STEREO POWER AMPLIFIER
*2 : W/O STEREO POWER AMPLIFIER

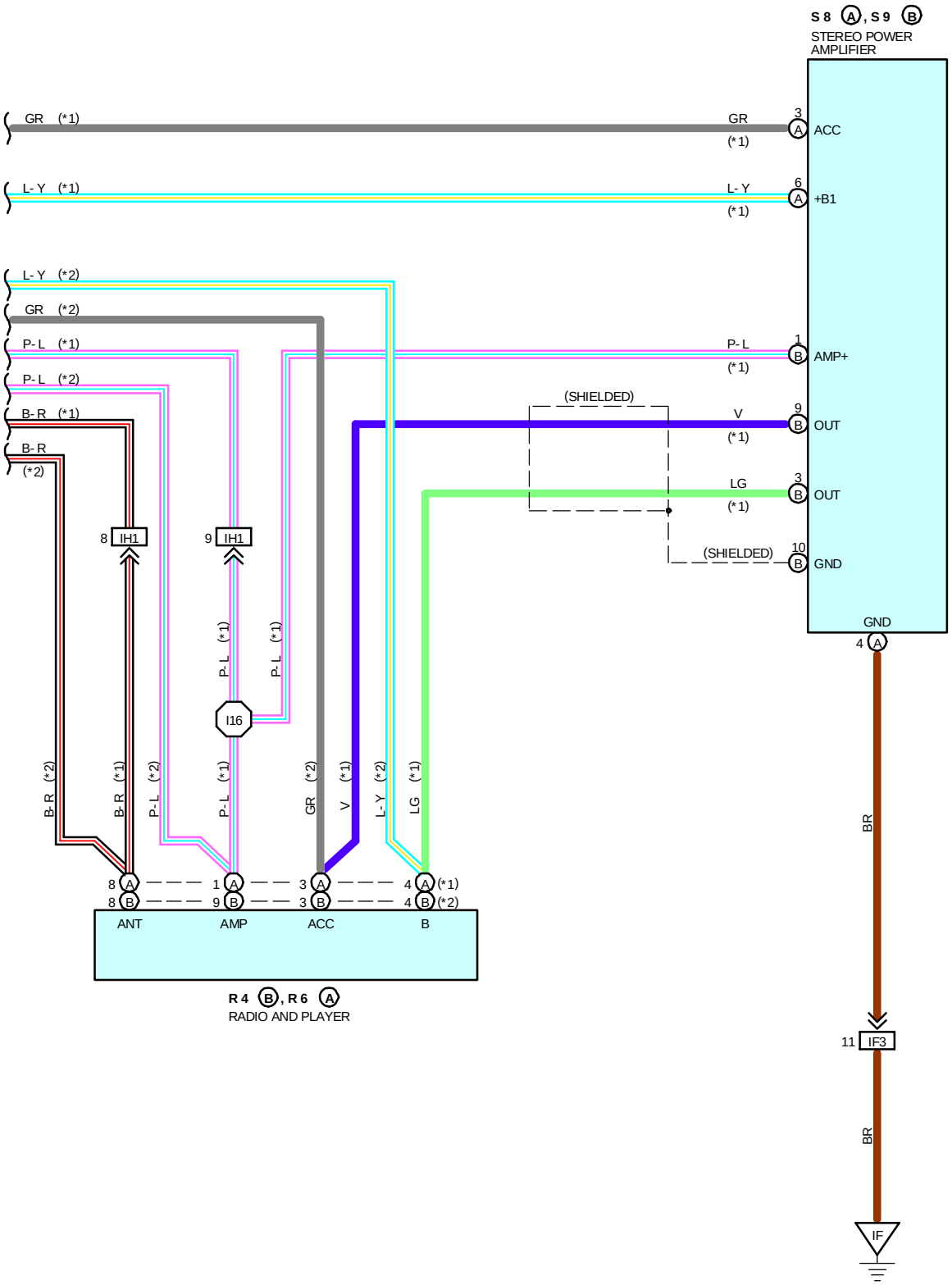

AUTO ANTENNA

SERVICE HINTS

A30 AUTO ANTENNA CONTROL RELAY

1-GROUND : ALWAYS APPROX. **12** VOLTS
4-GROUND : APPROX. **12** VOLTS WITH THE IGNITION SW AT **ON** POSITION
5-GROUND : APPROX. **12** VOLTS WITH THE IGNITION SW AT **ACC** OR **ON** POSITION
6-GROUND : ALWAYS CONTINUITY

: PARTS LOCATION

CODE	SEE PAGE	CODE		SEE PAGE	CODE		SEE PAGE
A30	28	R 4	B	29	S 9	B	29
A33	30	R 6	A	29			
J 1	29	S 8	A	29			

: RELAY BLOCKS

CODE	SEE PAGE	RELAY BLOCKS (RELAY BLOCK LOCATION)
2	22	R/B NO. 2 (LEFT KICK PANEL)

: JUNCTION BLOCK AND WIRE HARNESS CONNECTOR

CODE	SEE PAGE	JUNCTION BLOCK AND WIRE HARNESS (CONNECTOR LOCATION)
1E	20	INSTRUMENT PANEL WIRE AND J/B NO. 1 (LEFT KICK PANEL)
1H	20	COWL WIRE AND J/B NO. 1 (LEFT KICK PANEL)

: CONNECTOR JOINING WIRE HARNESS AND WIRE HARNESS

CODE	SEE PAGE	JOINING WIRE HARNESS AND WIRE HARNESS (CONNECTOR LOCATION)
IB1	36	ENGINE ROOM MAIN WIRE AND COWL WIRE (LEFT KICK PANEL)
IE1	36	INSTRUMENT PANEL WIRE AND FLOOR NO. 2 WIRE (LEFT KICK PANEL)
IF1	36	INSTRUMENT PANEL WIRE AND COWL WIRE (INSTRUMENT PANEL REINFORCEMENT LH)
IF3	36	INSTRUMENT PANEL WIRE AND COWL WIRE (RIGHT KICK PANEL)
IH1	38	INSTRUMENT PANEL WIRE AND CONSOLE BOX WIRE (UNDER THE INSTRUMENT PANEL BRACE RH)

: GROUND POINTS

CODE	SEE PAGE	GROUND POINTS LOCATION
IF	36	LEFT KICK PANEL
IH	36	RIGHT KICK PANEL

: SPLICE POINTS

CODE	SEE PAGE	WIRE HARNESS WITH SPLICE POINTS	CODE	SEE PAGE	WIRE HARNESS WITH SPLICE POINTS
I 2	38	COWL WIRE	I16	38	CONSOLE BOX WIRE
I15	38	INSTRUMENT PANEL WIRE			

A30 GRAY

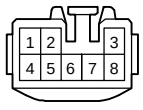

A33

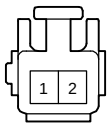

J 1

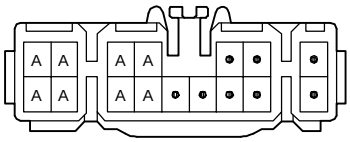

(HINT : SEE PAGE 7)

R 4 (B)

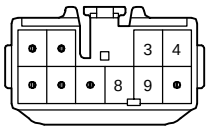

R 6 (A)

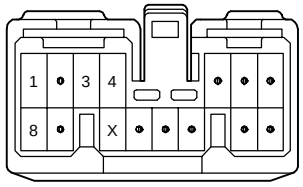

S 8 (A)

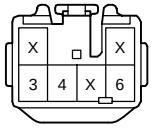

(W/ WOOFER) **S 9** (B) BLACK

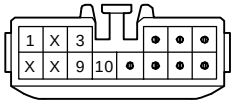

(W/O WOOFER) **S 9** (B)

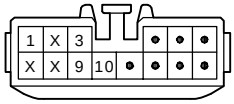

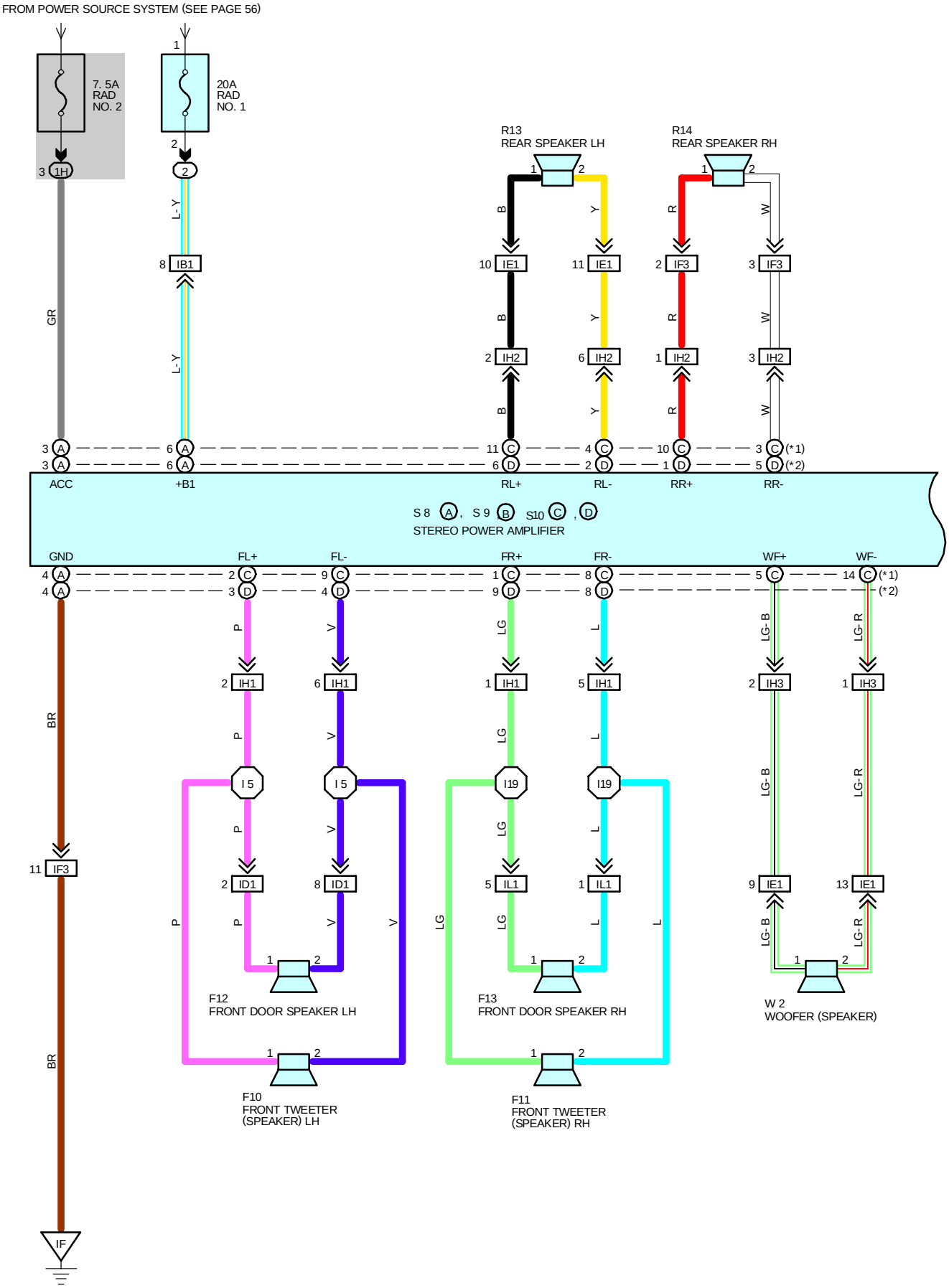
FROM POWER SOURCE SYSTEM (SEE PAGE 56)
7. 5A
RAD
NO. 2
20A
RAD
NO. 1
R13
REAR SPEAKER LH
R14
REAR SPEAKER RH
GR
L-Y
IB1
IE1
IF3
IH2
ACC
+B1
RL+
RL-
RR+
RR-
(*1)
(*2)
S 8 A, S 9 B S10 C, D
STEREO POWER AMPLIFIER
GND
FL+
FL-
FR+
FR-
WF+
WF-
BR
P
V
LG
L
LG-B
LG-R
IH1
IH3
I 5
I19
ID1
IL1
IF
F12
FRONT DOOR SPEAKER LH
F13
FRONT DOOR SPEAKER RH
F10
FRONT TWEETER
(SPEAKER) LH
F11
FRONT TWEETER
(SPEAKER) RH
W 2
WOOFER (SPEAKER)

(w/STEREO POWER AMPLIFIER)

*1 : W/ WOOFER (SPEAKER)
*2 : W/O WOOFER (SPEAKER)

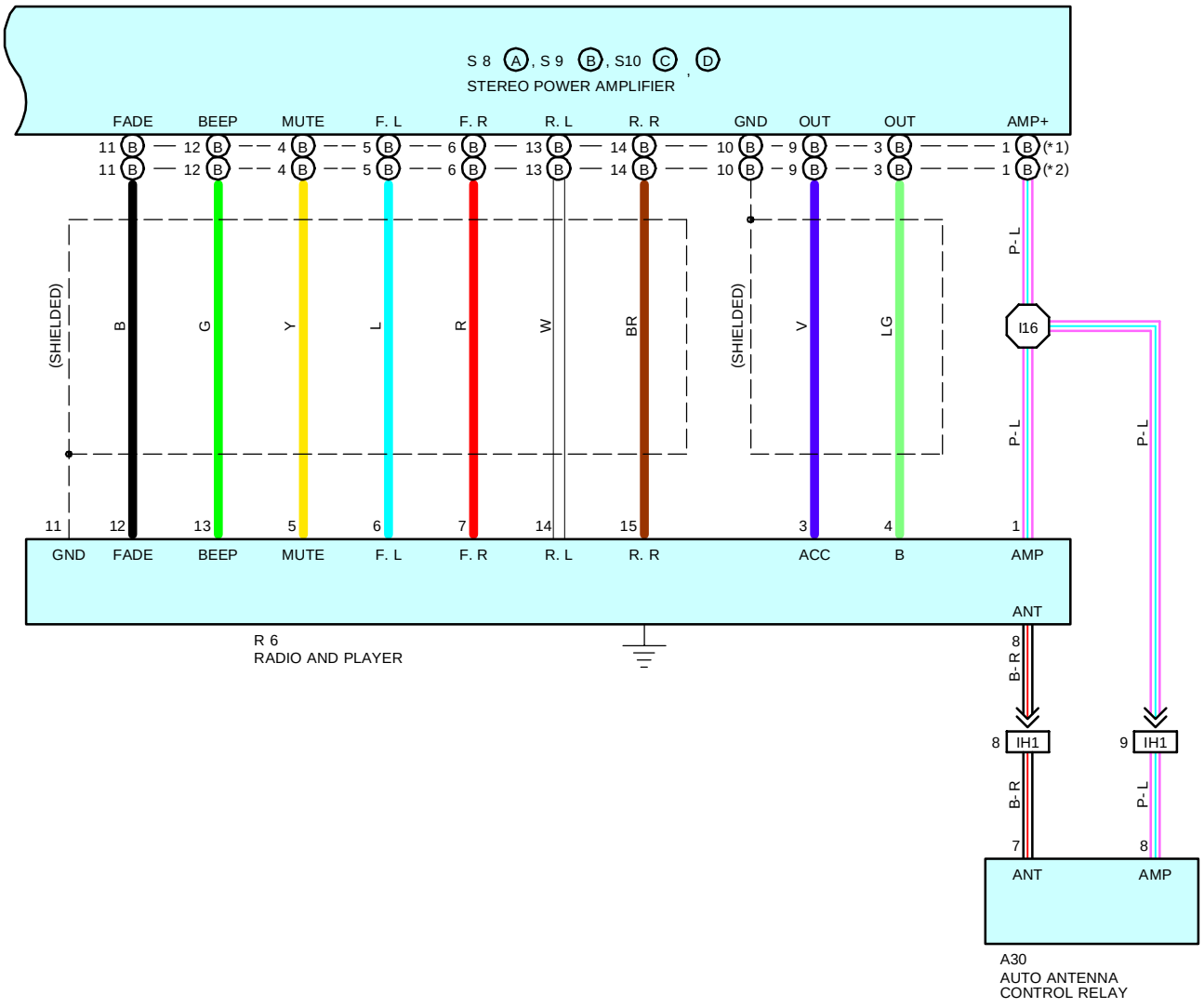

SERVICE HINTS

S8 (A) STEREO POWER AMPLIFIER

(A) 6, (A) 2-GROUND : ALWAYS APPROX. **12** VOLTS
(A) 3-GROUND : APPROX. **12** VOLTS WITH THE IGNITION SW AT **ON** OR **ACC** POSITION
(A) 4-GROUND : ALWAYS CONTINUITY

: PARTS LOCATION

CODE	SEE PAGE	CODE		SEE PAGE	CODE		SEE PAGE
A30	28	R6		29	S10	C	29
F10	29	R13		30		D	29
F11	29	R14		30	W2		30
F12	30	S8	A	29			
F13	30	S9	B	29			

: RELAY BLOCKS

CODE	SEE PAGE	RELAY BLOCKS (RELAY BLOCK LOCATION)
2	22	R/B NO. 2 (ENGINE COMPARTMENT)

: JUNCTION BLOCK AND WIRE HARNESS CONNECTOR

CODE	SEE PAGE	JUNCTION BLOCK AND WIRE HARNESS (CONNECTOR LOCATION)
1H	20	COWL WIRE AND J/B NO. 1 (LEFT KICK PANEL)

: CONNECTOR JOINING WIRE HARNESS AND WIRE HARNESS

CODE	SEE PAGE	JOINING WIRE HARNESS AND WIRE HARNESS (CONNECTOR LOCATION)
IB1	36	ENGINE ROOM MAIN WIRE AND COWL WIRE (LEFT KICK PANEL)
ID1	36	FRONT DOOR LH WIRE AND INSTRUMENT PANEL WIRE (LEFT KICK PANEL)
IE1	36	INSTRUMENT PANEL WIRE AND FLOOR NO. 2 WIRE (LEFT KICK PANEL)
IF3	36	INSTRUMENT PANEL WIRE AND COWL WIRE (RIGHT KICK PANEL)
IH1	38	INSTRUMENT PANEL WIRE AND CONSOLE BOX WIRE (UNDER THE INSTRUMENT PANEL BRACE RH)
IH2		
IH3		
IL1	38	FRONT DOOR RH WIRE AND INSTRUMENT PANEL WIRE (RIGHT KICK PANEL)

: GROUND POINTS

CODE	SEE PAGE	GROUND POINTS LOCATION
IF	36	LEFT KICK PANEL

: SPLICE POINTS

CODE	SEE PAGE	WIRE HARNESS WITH SPLICE POINTS	CODE	SEE PAGE	WIRE HARNESS WITH SPLICE POINTS
I5	38	INSTRUMENT PANEL WIRE	I19	38	INSTRUMENT PANEL WIRE
I16	38	CONSOLE BOX WIRE			

(w/STEREO POWER AMPLIFIER)

*1 : W/ WOOFER (SPEAKER)
*2 : W/O WOOFER (SPEAKER)

A30 GRAY

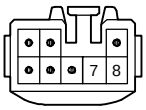

F10

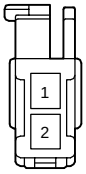

F11

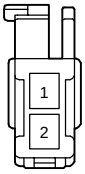

F12

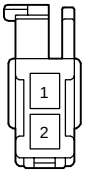

F13

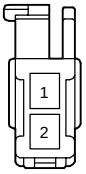

R 6

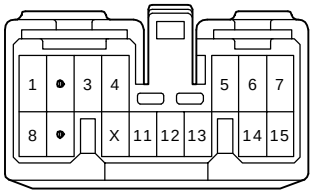

R13

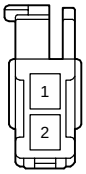

R14

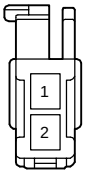

S 8 (A)

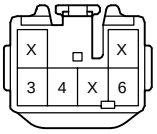

(*1) S 9 (B) BLACK

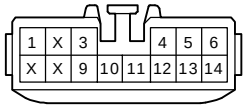

(*2) S 9 (B)

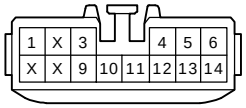

(*1) S10 (C) BLACK

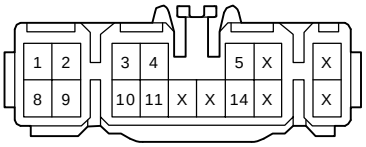

(*2) S10 (D)

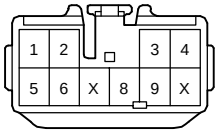

W 2

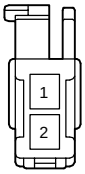

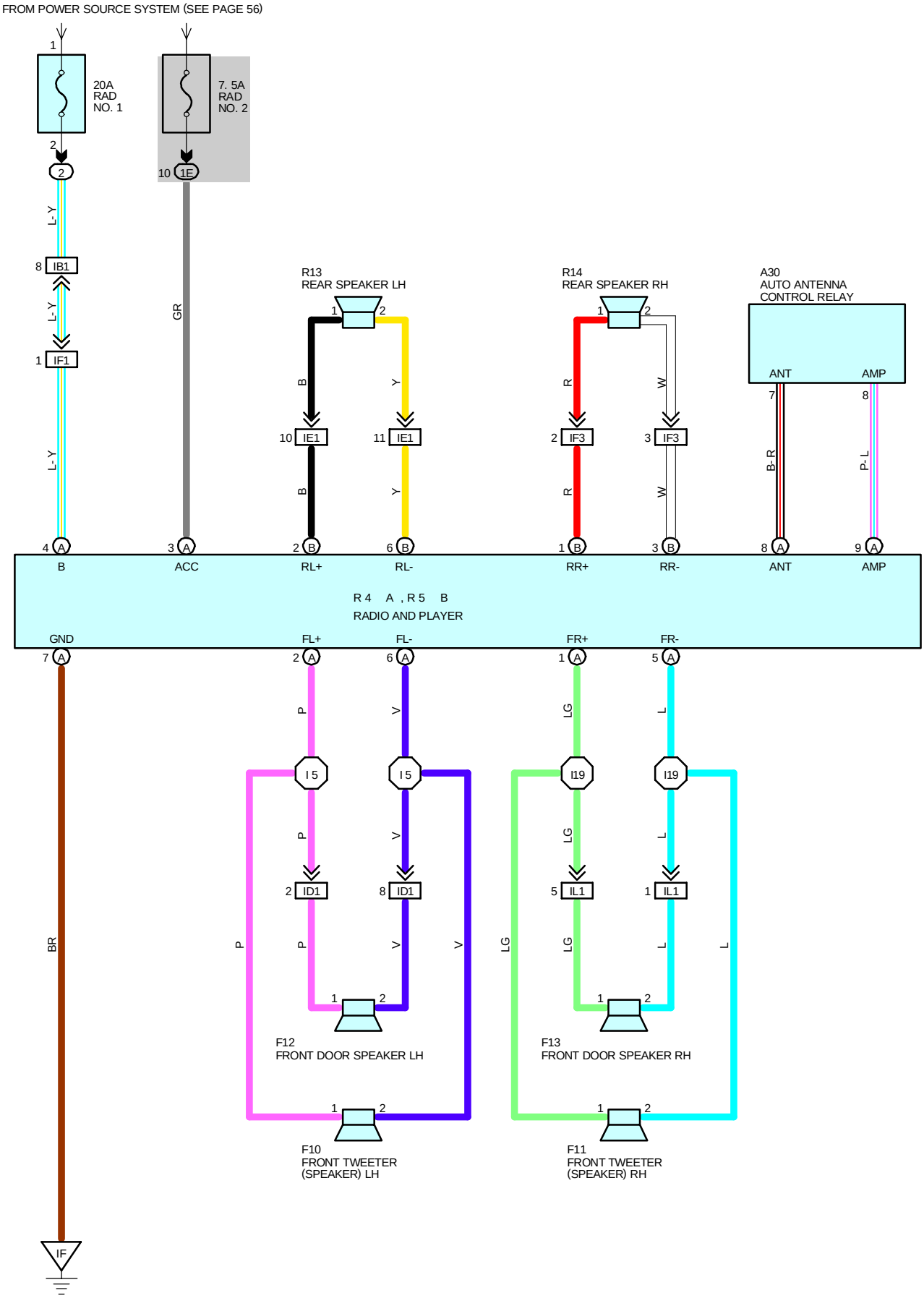
FROM POWER SOURCE SYSTEM (SEE PAGE 56)
20A RAD NO. 1
7. 5A RAD NO. 2
L-Y
GR
IB1
IF1
1E
R13
REAR SPEAKER LH
R14
REAR SPEAKER RH
A30
AUTO ANTENNA CONTROL RELAY
ANT
AMP
B-R
P-L
IE1
IF3
B
Y
R
W
B
ACC
RL+
RL-
RR+
RR-
ANT
AMP
R 4 A , R 5 B
RADIO AND PLAYER
GND
FL+
FL-
FR+
FR-
BR
P
V
LG
L
I 5
I19
ID1
IL1
IF
F12
FRONT DOOR SPEAKER LH
F13
FRONT DOOR SPEAKER RH
F10
FRONT TWEETER (SPEAKER) LH
F11
FRONT TWEETER (SPEAKER) RH

(w/o STEREO POWER AMPLIFIER

SERVICE HINTS

R4(A) RADIO AND PLAYER

(A) 4-GROUND : ALWAYS APPROX. **12** VOLTS
(A) 3-GROUND : APPROX. **12** VOLTS WITH THE IGNITION SW AT **ON** OR **ACC** POSITION
(A) 7-GROUND : ALWAYS CONTINUITY

: PARTS LOCATION

CODE	SEE PAGE	CODE	SEE PAGE	CODE	SEE PAGE
A30	28	F12	30	R5 B	29
F10	29	F13	30	R13	30
F11	29	R4 A	29	R14	30

: RELAY BLOCKS

CODE	SEE PAGE	RELAY BLOCKS (RELAY BLOCK LOCATION)
2	22	R/B NO. 2 (ENGINE COMPARTMENT LEFT)

: JUNCTION BLOCK AND WIRE HARNESS CONNECTOR

CODE	SEE PAGE	JUNCTION BLOCK AND WIRE HARNESS (CONNECTOR LOCATION)
1E	20	INSTRUMENT PANEL WIRE AND J/B NO. 1 (LEFT KICK PANEL)

: CONNECTOR JOINING WIRE HARNESS AND WIRE HARNESS

CODE	SEE PAGE	JOINING WIRE HARNESS AND WIRE HARNESS (CONNECTOR LOCATION)
IB1	36	ENGINE ROOM MAIN WIRE AND COWL WIRE (LEFT KICK PANEL)
ID1	36	FRONT DOOR LH WIRE AND INSTRUMENT PANEL WIRE (LEFT KICK PANEL)
IE1	36	INSTRUMENT PANEL WIRE AND FLOOR NO. 2 WIRE (LEFT KICK PANEL)
IF1	36	INSTRUMENT PANEL WIRE AND COWL WIRE (INSTRUMENT PANEL REINFORCEMENT LH)
IF3	36	INSTRUMENT PANEL WIRE AND COWL WIRE (RIGHT KICK PANEL)
IL1	38	FRONT DOOR RH WIRE AND INSTRUMENT PANEL WIRE (RIGHT KICK PANEL)

: GROUND POINTS

CODE	SEE PAGE	GROUND POINTS LOCATION
IF	36	LEFT KICK PANEL

: SPLICE POINTS

CODE	SEE PAGE	WIRE HARNESS WITH SPLICE POINTS	CODE	SEE PAGE	WIRE HARNESS WITH SPLICE POINTS
I5	38	INSTRUMENT PANEL WIRE	I19	38	INSTRUMENT PANEL WIRE

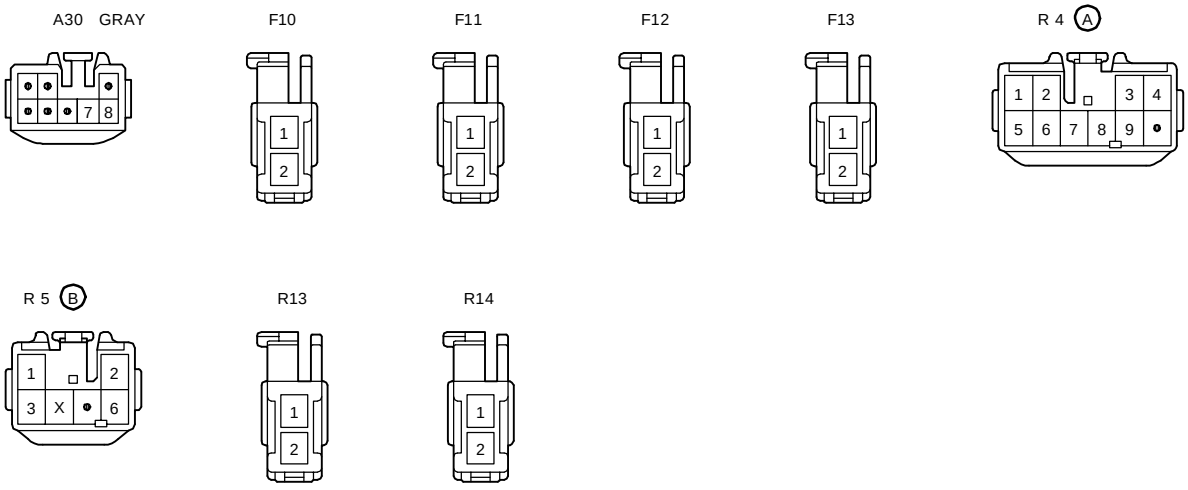

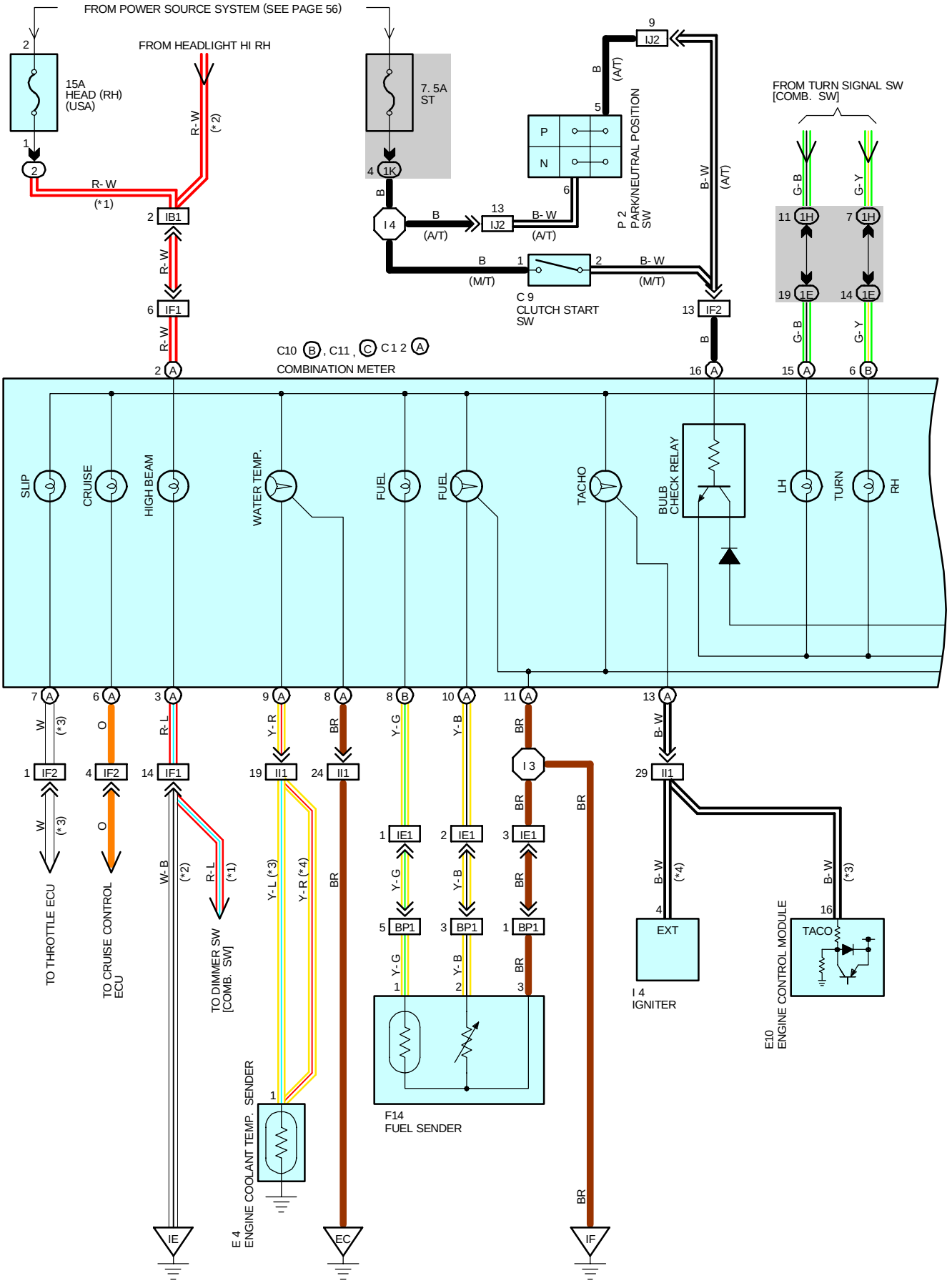
FROM POWER SOURCE SYSTEM (SEE PAGE 56)
FROM HEADLIGHT HI RH
15A HEAD (RH) (USA)
7. 5A ST
FROM TURN SIGNAL SW [COMB. SW]
P 2 PARK/NEUTRAL POSITION SW
C 9 CLUTCH START SW
C10 B, C11 C, C12 A
COMBINATION METER
SLIP
CRUISE
HIGH BEAM
WATER TEMP.
FUEL
FUEL
TACHO
BULB CHECK RELAY
LH
TURN
RH
TO THROTTLE ECU
TO CRUISE CONTROL ECU
TO DIMMER SW [COMB. SW]
E 4 ENGINE COOLANT TEMP. SENDER
F14 FUEL SENDER
I 4 IGNITER
E10 ENGINE CONTROL MODULE
TACO
EXT
IE
EC
IF

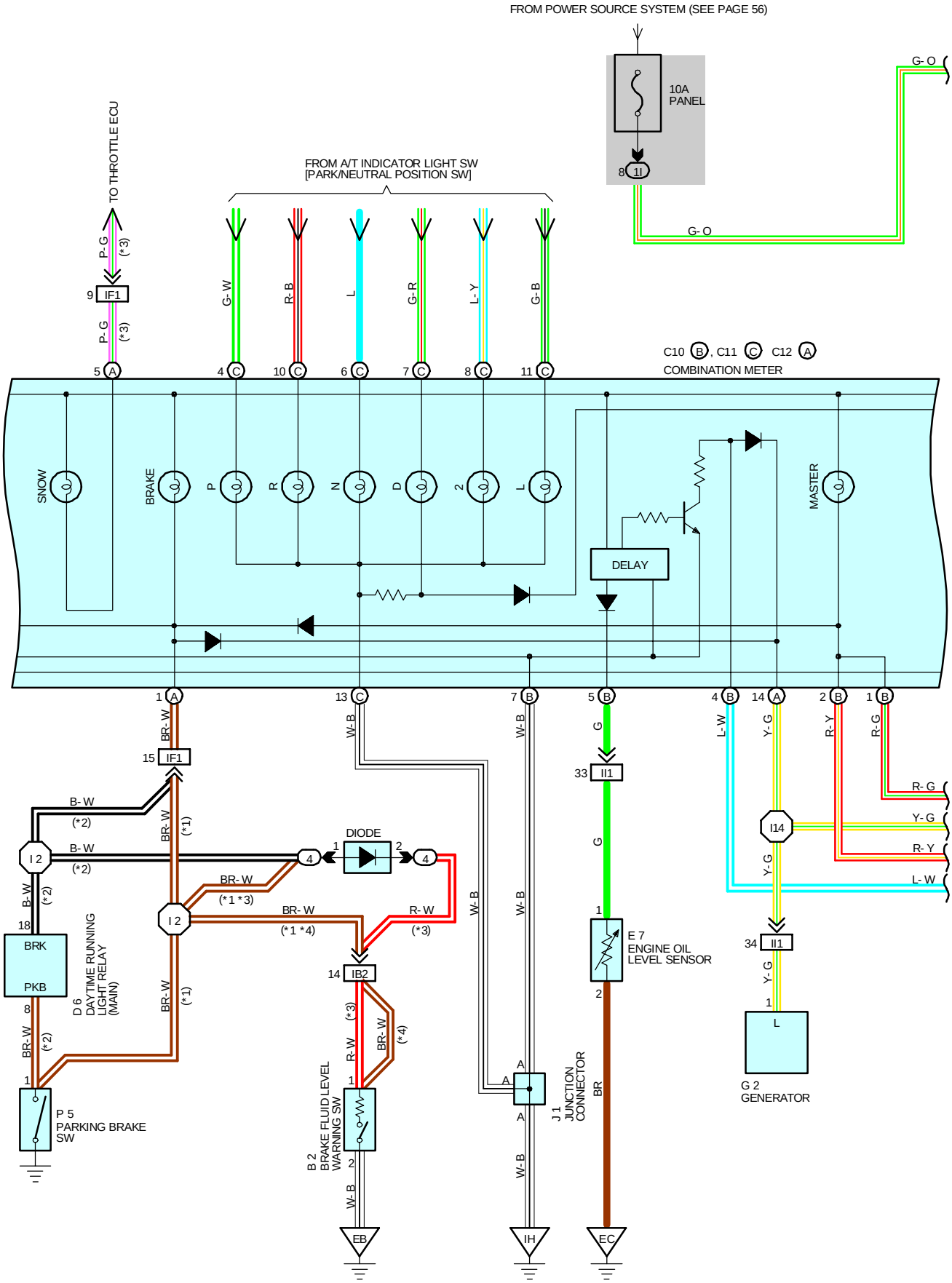
FROM POWER SOURCE SYSTEM (SEE PAGE 56)
10A PANEL
8 1I
G- O
G- O
TO THROTTLE ECU
P- G (*3)
9 IF1
P- G (*3)
FROM A/T INDICATOR LIGHT SW [PARK/NEUTRAL POSITION SW]
G- W
R- B
L
G- R
L- Y
G- B
5 A
4 C
10 C
6 C
7 C
8 C
11 C
C10 B, C11 C C12 A
COMBINATION METER
SNOW
BRAKE
P
R
N
D
2
L
MASTER
DELAY
1 A
13 C
7 B
5 B
4 B
14 A
2 B
1 B
BR- W
15 IF1
W- B
W- B
G
L- W
Y- G
R- Y
R- G
33 II1
R- G
Y- G
R- Y
L- W
I14
B- W (*2)
B- W (*2)
I 2
DIODE
BR- W (*1)
BR- W (*1 *3)
BR- W (*1 *4)
R- W (*3)
B- W (*2)
18
BRK
PKB
D 6
DAYTIME RUNNING LIGHT RELAY (MAIN)
BR- W (*2)
8
1
P 5
PARKING BRAKE SW
BR- W (*1)
14 IB2
R- W (*3)
BR- W (*4)
B 2
BRAKE FLUID LEVEL WARNING SW
W- B
EB
W- B
W- B
A
A
A
J 1
JUNCTION CONNECTOR
IH
1
E 7
ENGINE OIL LEVEL SENSOR
2
BR
EC
34 II1
Y- G
1
L
G 2
GENERATOR

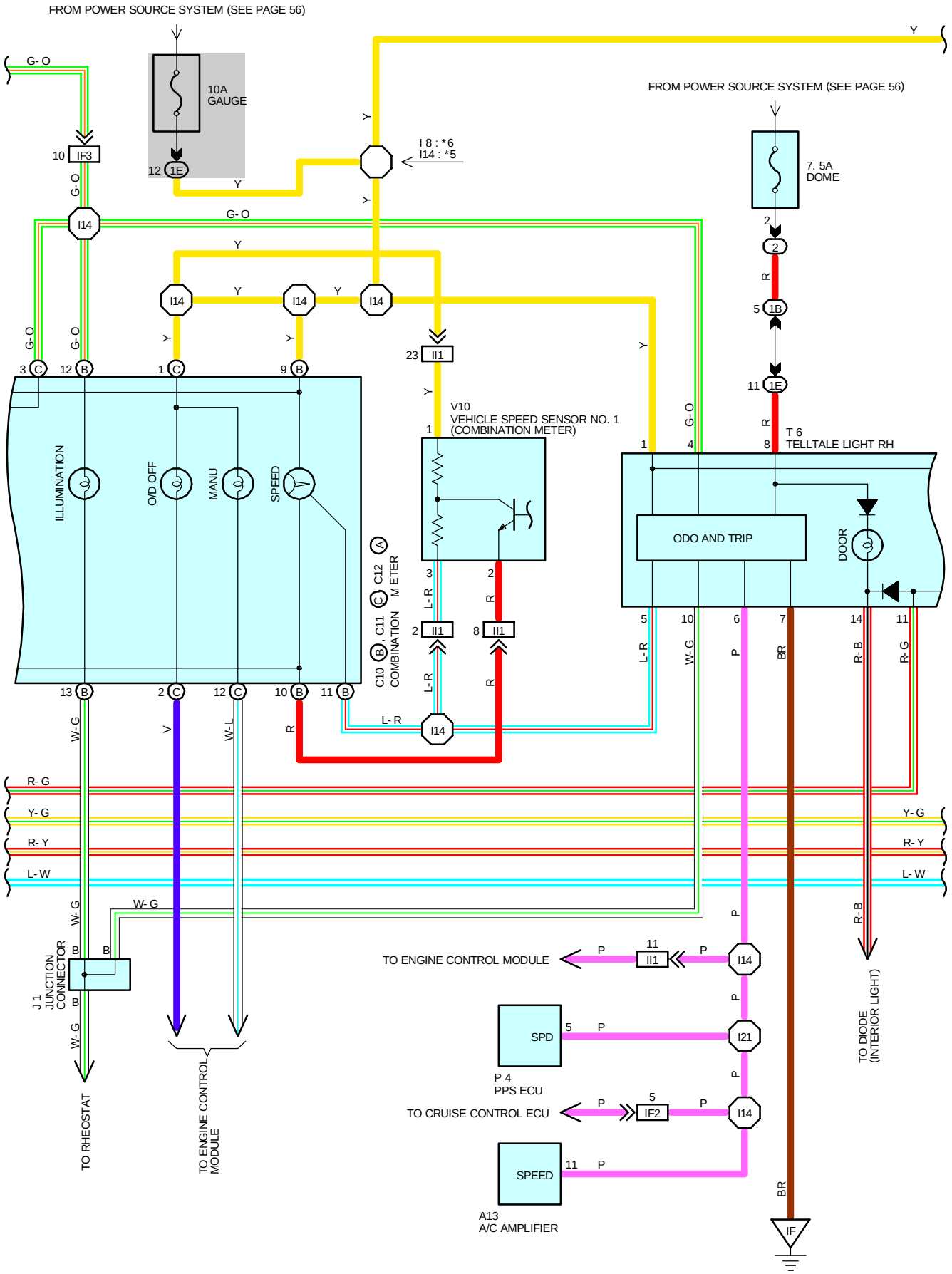
FROM POWER SOURCE SYSTEM (SEE PAGE 56)
10A GAUGE
12 1E
10 IF3
G-O
I14
I 8 : *6
I14 : *5
FROM POWER SOURCE SYSTEM (SEE PAGE 56)
7. 5A DOME
2
2
5 1B
11 1E
T 6
TELLTALE LIGHT RH
23 II1
V10
VEHICLE SPEED SENSOR NO. 1
(COMBINATION METER)
ILLUMINATION
O/D OFF
MANU
SPEED
ODO AND TRIP
DOOR
C12 METER
C11 COMBINATION
C10
L-R
R
W-G
V
W-L
L-W
R-G
Y-G
R-Y
P
BR
R-B
J1 JUNCTION CONNECTOR
TO RHEOSTAT
TO ENGINE CONTROL MODULE
TO ENGINE CONTROL MODULE
SPD
P 4
PPS ECU
TO CRUISE CONTROL ECU
IF2
SPEED
A13
A/C AMPLIFIER
I21
TO DIODE (INTERIOR LIGHT)
IF

*1 : USA
*2 : CANADA
*3 : 2JZ- GTE
*4 : 2JZ- GE
*5 : 2JZ- GE M/T
*6 : EXCEPT *5

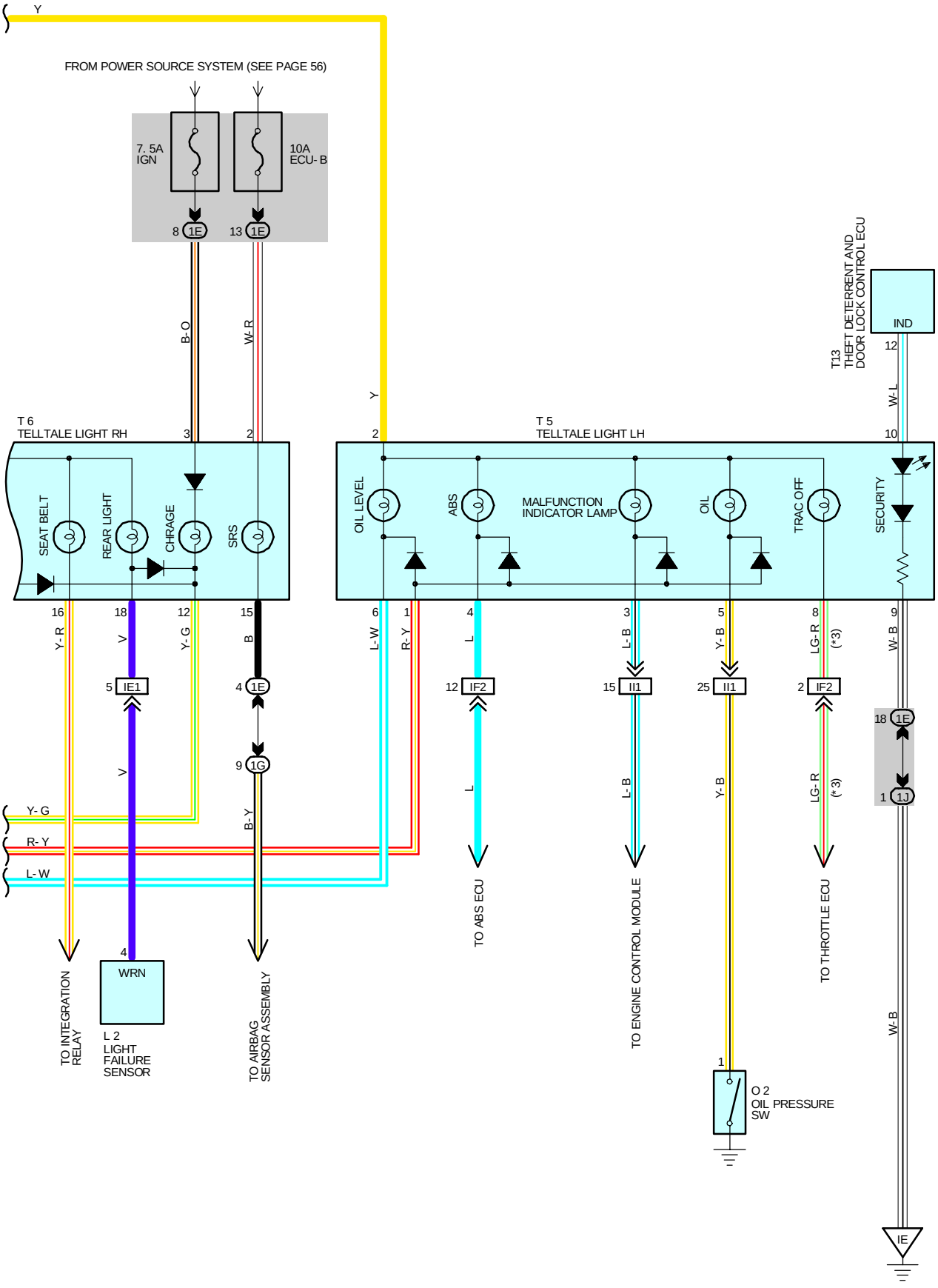

COMBINATION METER

SERVICE HINTS

B2 BRAKE FLUID LEVEL WARNING SW

1-2 : CLOSED WITH THE FLOAT DOWN

P5 PARKING BRAKE SW

1-GROUND : CLOSED WITH THE PARKING BRAKE LEVER PULLED UP

O2 OIL PRESSURE SW

1-GROUND : CLOSED WITH THE OIL PRESSURE ABOVE APPROX. **20** KPA (**2.8** PSI, **0.2** KG/CM^2)

E4 ENGINE COOLANT TEMP. SENDER

1-GROUND : APPROX. **160-240** Ω (**50**•C, **122**•F)
APPROX. **17.1-20.4** Ω (**120**•C, **288**•F)

E7 ENGINE OIL LEVEL SENSOR

1-2 : CLOSED WITH THE FLOAT UP AND THE ENGINE OIL TEMP. AT BELOW APPROX. **55**•C (**131**•F)
OPEN WITH THE FLOAT DOWN AND THE ENGINE OIL TEMP. AT BELOW APPOX. **60**•C (**140**•F)

F14 FUEL SENDER

1-2 : APPROX. **3** Ω AT FUEL FULL
APPROX. **110** Ω AT FUEL EMPTY

C10 (B), C12 (A) COMBINATION METER

(B) 9-GROUND : APPROX. **12** VOLTS WITH THE IGNITION SW AT **ON** POSITION

(A) 16-GROUND : APPROX. **12** VOLTS WITH THE IGNITION SW AT **ST** POSITION AND THE SHIFT LEVER AT **P** OR **N** POSITION (A/T)
12 VOLTS WITH THE IGNITION SW AT **ST** POSITION AND THE CLUTCH PEDAL DEPRESSED (M/T)

(A) 8-GROUND : ALWAYS CONTINUITY

(A) 11-GROUND : ALWAYS CONTINUITY

: PARTS LOCATION

CODE	SEE PAGE	CODE	SEE PAGE	CODE	SEE PAGE
A13	28	E7	24 (2JZ-GTE)	O2	27 (2JZ-GE)
B2	24 (2JZ-GTE)		26 (2JZ-GE)	P2	25 (2JZ-GTE)
	26 (2JZ-GE)	E10	29		27 (2JZ-GE)
C9	28	F14	30	P4	29
C10 B	28	G2	24 (2JZ-GTE)	P5	29
C11 C	28		26 (2JZ-GE)	T5	29
C12 A	28	I4	27	T6	29
D6	28	J1	29	T13	29
E4	24 (2JZ-GTE)	L2	30	V10	25 (2JZ-GTE)
	26 (2JZ-GE)	O2	25 (2JZ-GTE)		27 (2JZ-GE)

: RELAY BLOCKS

CODE	SEE PAGE	RELAY BLOCKS (RELAY BLOCK LOCATION)
2	22	R/B NO. 2 (ENGINE COMPARTMENT LEFT)
4	23	R/B NO. 4 (LEFT KICK PANEL)

: JUNCTION BLOCK AND WIRE HARNESS CONNECTOR

CODE	SEE PAGE	JUNCTION BLOCK AND WIRE HARNESS (CONNECTOR LOCATION)
1B	20	ENGINE ROOM MAIN WIRE AND J/B NO. 1 (LEFT KICK PANEL)
1E	20	INSTRUMENT PANEL WIRE AND J/B NO. 1 (LEFT KICK PANEL)
1G	20	COWL WIRE AND J/B NO. 1 (LEFT KICK PANEL)
1H		
1I		
1J		
1K		

: CONNECTOR JOINING WIRE HARNESS AND WIRE HARNESS

CODE	SEE PAGE	JOINING WIRE HARNESS AND WIRE HARNESS (CONNECTOR LOCATION)
IB1	36	ENGINE ROOM MAIN WIRE AND COWL WIRE (LEFT KICK PANEL)
IB2		
IE1	36	INSTRUMENT PANEL WIRE AND FLOOR NO. 2 WIRE (LEFT KICK PANEL)
IF1	36	INSTRUMENT PANEL WIRE AND COWL WIRE (INSTRUMENT PANEL REINFORCEMENT LH)
IF2		
IF3	36	INSTRUMENT PANEL WIRE AND COWL WIRE (RIGHT KICK PANEL)
II1	38	ENGINE WIRE AND INSTRUMENT PANEL WIRE (RIGHT KICK PANEL)
IJ2	38	ENGINE WIRE COWL WIRE (RIGHT KICK PANEL)
BP1	40	FUEL GAUGE WIRE AND FLOOR NO. 2 WIRE (LUGGAGE ROOM FRONT LH)

: GROUND POINTS

CODE	SEE PAGE	GROUND POINTS LOCATION
EB	32 (2JZ-GTE) 34 (2JZ-GE)	FRONT SIDE OF LEFT FENDER
EC	32 (2JZ-GTE) 34 (2JZ-GE)	FRONT SIDE OF INTAKE MANIFOLD
IE IF	36	LEFT KICK PANEL
IH	36	RIGHT KICK PANEL

: SPLICE POINTS

CODE	SEE PAGE	WIRE HARNESS WITH SPLICE POINTS	CODE	SEE PAGE	WIRE HARNESS WITH SPLICE POINTS
I2	38	COWL WIRE	I8	38	INSTRUMENT PANEL WIRE
I3	38	INSTRUMENT PANEL WIRE	I14		
I4	38	COWL WIRE	I21		

A13 ORANGE

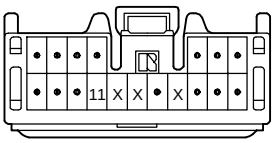

B 2 GRAY



C 9

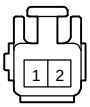

C10 (B) BLUE

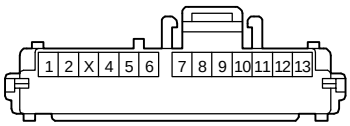

C11 (C) BROWN

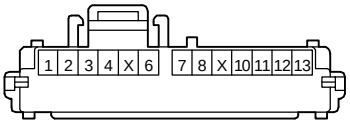

C12 (A)

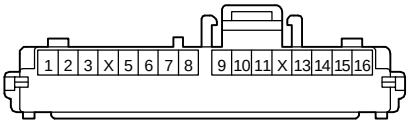

D 6 GRAY

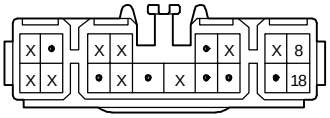

E 4 GRAY



E 7 GRAY



E10 DARK GRAY

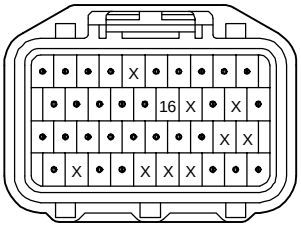

F14 DARK GRAY

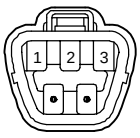

G 2 BLACK

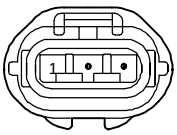

I 4 BLACK

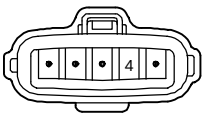

J 1

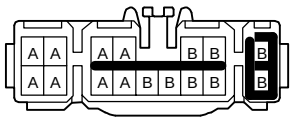

(HINT : SEE PAGE 7)

L 2

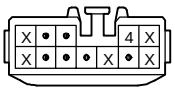

O 2 BLACK



P 2 GRAY

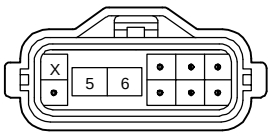

P 4 BLUE

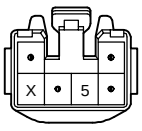

P 5



(2JZ-GTE) T 5

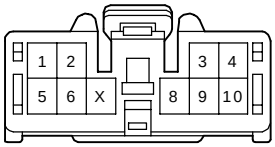

(2JZ-GE) T 5

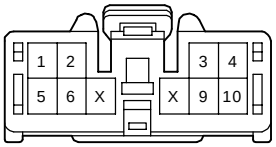

T 6

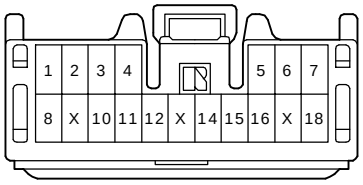

T13 ORANGE

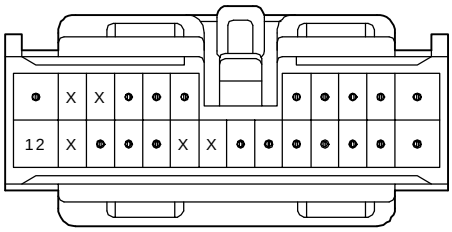

V10 BLACK

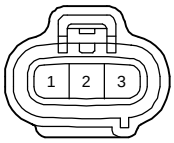

SYSTEM OUTLINE

1. HEATER BLOWER OPERATION

MANUAL BLOWER OPERATION

WHEN THE BLOWER CONTROL SW IS SET TO ANY BLOWER SPEEDS, THE A/C AMPLIFIER OPERATES AND THE CURRENT TO DRIVE THE BLOWER MOTOR FLOWS FROM **TERMINAL BLW** OF THE A/C AMPLIFIER TO **TERMINAL SI** OF THE BLOWER MOTOR CONTROL RELAY. THE CURRENT ACTIVATES THE RELAY AND THE VOLTAGE APPLIED TO **TERMINAL +B** OF THE BLOWER MOTOR CONTROL RELAY IS OUTPUT AT **TERMINAL M+** AS THE VOLTAGE FOR THE SELECTED BLOWER SPEED. THE CURRENT THEN FLOWS FROM **TERMINAL M+** OF THE BLOWER MOTOR CONTROL RELAY TO **TERMINAL 2 ➔ TERMINAL 1 ➔ TERMINAL M-** OF THE BLOWER MOTOR CONTROL RELAY ➔ **TERMINAL GND ➔ GROUND**, AND THE BLOWER MOTOR OPERATES AT THE BLOWER SPEED SELECTED.

AUTO FUNCTION

WHEN THE AUTO SW IS TURNED ON, THE A/C AMPLIFIER CALCULATES THE REQUIRED VENT TEMPERATURE BASE ON THE SET TEMPERATURE AND INPUT FROM EACH SENSOR. THEN **TERMINAL BLW** OF THE A/C AMPLIFIER INPUTS CURRENT TO **TERMINAL SI** OF THE BLOWER MOTOR CONTROL RELAY IN CONFORMITY WITH THE REQUIRED VENT OUTPUT. THIS CURRENT ACTIVATES THE BLOWER MOTOR CONTROL RELAY SO THAT CURRENT FLOWS FROM **TERMINAL M+** OF THE BLOWER MOTOR CONTROL RELAY ➔ **TERMINAL 2** OF THE BLOWER MOTOR ➔ **TERMINAL 1 ➔ TERMINAL M-** OF THE BLOWER MOTOR CONTROL RELAY ➔ **TERMINAL GND ➔ GROUND**, ACTIVATING THE BLOWER MOTOR. THE BLOWER MOTOR THEN OPERATES AT DIFFERENT STEPS IN CONFORMITY WITH VARIABLE CURRENT FLOW OUTPUT FROM **TERMINAL BLW** OF THE A/C AMPLIFIER TO **TERMINAL SI** OF HE BLOWER MOTOR CONTROL RELAY.

2. OPERATION OF AIR INLET CONTROL SERVO MOTOR

(SWITCHING FROM FRESH TO RECIRC)

WITH THE IGNITION SW TURNED ON, THE CURRENT FLOWS FROM **HTR** FUSE TO **TERMINAL 2** OF THE AIR INLET CONTROL SERVO MOTOR ➔ **TERMINAL 5 ➔ TERMINAL AIR** OF THE A/C AMPLIFIER ➔ **TERMINAL GND ➔ GROUND**, THE MOTOR ROTATES AND THE DAMPER STOPS AT **RECIRC** POSITION.

(SWITCHING FROM RECIRC TO FRESH)

WITH THE IGNITION SW TURNED ON, THE CURRENT FLOWS FROM **HTR** FUSE TO **TERMINAL 2** OF THE AIR INLET CONTROL SERVO MOTOR ➔ **TERMINAL 3 ➔ TERMINAL AIF** OF THE A/C AMPLIFIER ➔ **TERMINAL GND ➔ GROUND**, THE MOTOR ROTATES AND THE DAMPER STOPS AT **FRESH** POSITION.

3. OPERATION OF AIR VENT MODE CONTROL SERVO MOTOR

WITH THE IGNITION SW TURNED ON, THE CURRENT FLOWS FROM **HTR** FUSE TO **TERMINAL IG** OF THE A/C AMPLIFIER

(SWITCHING FROM DEF TO FACE)

THE CURRENT FROM **TERMINAL AOF** OF THE A/C AMPLIFIER ➔ **TERMINAL 1** OF THE AIR VENT MODE CONTROL SERVO MOTOR ➔ **TERMINAL 2 ➔ TERMINAL AOD** OF THE A/C AMPLIFIER ➔ **TERMINAL GND ➔ GROUND**. THE MOTOR ROTATES AND THE DAMPER MOVES TO FACE SIDE. WHEN THE DAMPER OPERATES WITH THE A/C SW AT **FACE** POSITION, THE DAMPER POSITION SIGNAL IS INPUT FROM **TERMINAL 3** OF THE SERVO MOTOR TO THE **TERMINAL TP0** OF THE A/C AMPLIFIER. AS A RESULT, CURRENT TO THE SERVO MOTOR CIRCUIT IS CUT OFF BY THE AMPLIFIER, SO THE DAMPER STOPS AT THAT POSITION.

(SWITCHING FROM FACE TO DEF)

THE CURRENT FLOWS FROM **TERMINAL AOD** OF THE A/C AMPLIFIER ➔ **TERMINAL 2** OF THE AIR VENT MODE CONTROL SERVO MOTOR ➔ **TERMINAL 1 ➔ TERMINAL AOF** OF THA A/C AMPLIFIER ➔ **TERMINAL GND ➔ GROUND**, THE MOTOR ROTATES AND THE DAMPER STOPS AT THAT POSITION.

4. OPERATION OF AIR MIX CONTROL SERVO MOTOR

WHEN THE TEMPERATURE SW IS TURNED TO THE “COOL” SIDE, THE CURRENT FLOWS FROM **TERMINAL AMC** OF THE A/C AMPLIFIER ➔ **TERMINAL 1** OF THE AIR MIX CONTROL SERVO MOTOR ➔ MOTOR ➔ **TERMINAL 2 ➔ TERMINAL AMH** OF THE A/C AMPLIFIER ➔ **TERMINAL GND ➔ GROUND** AND THE MOTOR ROTATES. THE DAMPER OPENING ANGLE AT THIS TIME IS INPUT FROM **TERMINAL 3** OF SERVO MOTOR TO **TERMINAL TP** OF THE A/C CONTROL ASSEMBLY, THIS IS USED TO DETERMINE THE DAMPER STOP POSITION AND MAINTAIN THE SET TEMPERATURE.

WHEN THE TEMPERATURE CONTROL SW IS TURNED TO THE “WARM” SIDE, THE CURRENT FLOWS FROM **TERMINAL AMH** OF THE A/C AMPLIFIER ➔ **TERMINAL 2** OF THE AIR MIX CONTROL SERVO MOTOR ➔ MOTOR ➔ **TERMINAL 1 ➔ TERMINAL AMC** OF THE A/C AMPLIFIER, ROTATING THE MOTOR IN REVERSE AND SWITCHING THE DAMPER FROM COOL TO WARM SIDE.

5. AIR CONDITIONING OPERATION

THE A/C AMPLIFIER RECEIVES VARIOUS SIGNALS, I.E., THE ENGINE RPM FROM THE IGNITER, OUTLET TEMPERATURE SIGNAL FROM THE A/C THERMISTOR, COOLANT TEMPERATURE FROM THE ENGINE COOLANT TEMP. SENSOR AND THE LOCK SIGNAL FROM THE A/C COMPRESSOR, ETC.

WHEN THE ENGINE IS STARTED AND THE A/C SW (HEATER CONTROL SW) IS ON, A SIGNAL IS INPUT TO THE A/C AMPLIFIER. AS A RESULT, THE GROUND CIRCUIT IN A/C AMPLIFIER IS CLOSED AND CURRENT FLOWS FROM **HTR** FUSE TO **TERMINAL 1** OF THE A/C MAGNETIC CLUTCH RELAY ➔ **TERMINAL 2** ➔ **TERMINAL ACMG** OF THE ENGINE CONTROL MODULE ➔ **TERMINAL A/C** ➔ **TERMINAL MGC** OF THE A/C AMPLIFIER ➔ **TERMINAL GND** ➔ **GROUND**, TURNING THE RELAY ON, SO THAT THE A/C MAGNETIC CLUTCH IS ON AND THE A/C AMPLIFIER OPERATES.

AT THE SAME TIME, THE ENGINE CONTROL MODULE DETECTS THE MAGNETIC CLUTCH IS ON AND THE A/C AMPLIFIER IS OPERATING AND OPENS DIRECTION TO AVOID LOWERING THE ENGINE RPM DURING A/C OPERATING.

WHEN ANY OF THE FOLLOWING SIGNALS ARE INPUT TO THE A/C AMPLIFIER, THE A/C AMPLIFIER OPERATES TO TURN OFF THE AIR CONDITIONING.

* ENGINE RPM SIGNAL IS HIGH.
* COOLANT TEMP. SIGNAL IS HIGH.
* A SIGNAL THAT THE TEMPERATURE AT THE AIR OUTLET IS LOW.
* A SIGNAL THAT THERE IS A LARGE DIFFERENCE BETWEEN ENGINE SPEED AND COMPRESSOR SPEED.
* A SIGNAL THAT THE REFRIGERANT PRESSURE IS ABNORMALLY HIGH OR LOW.

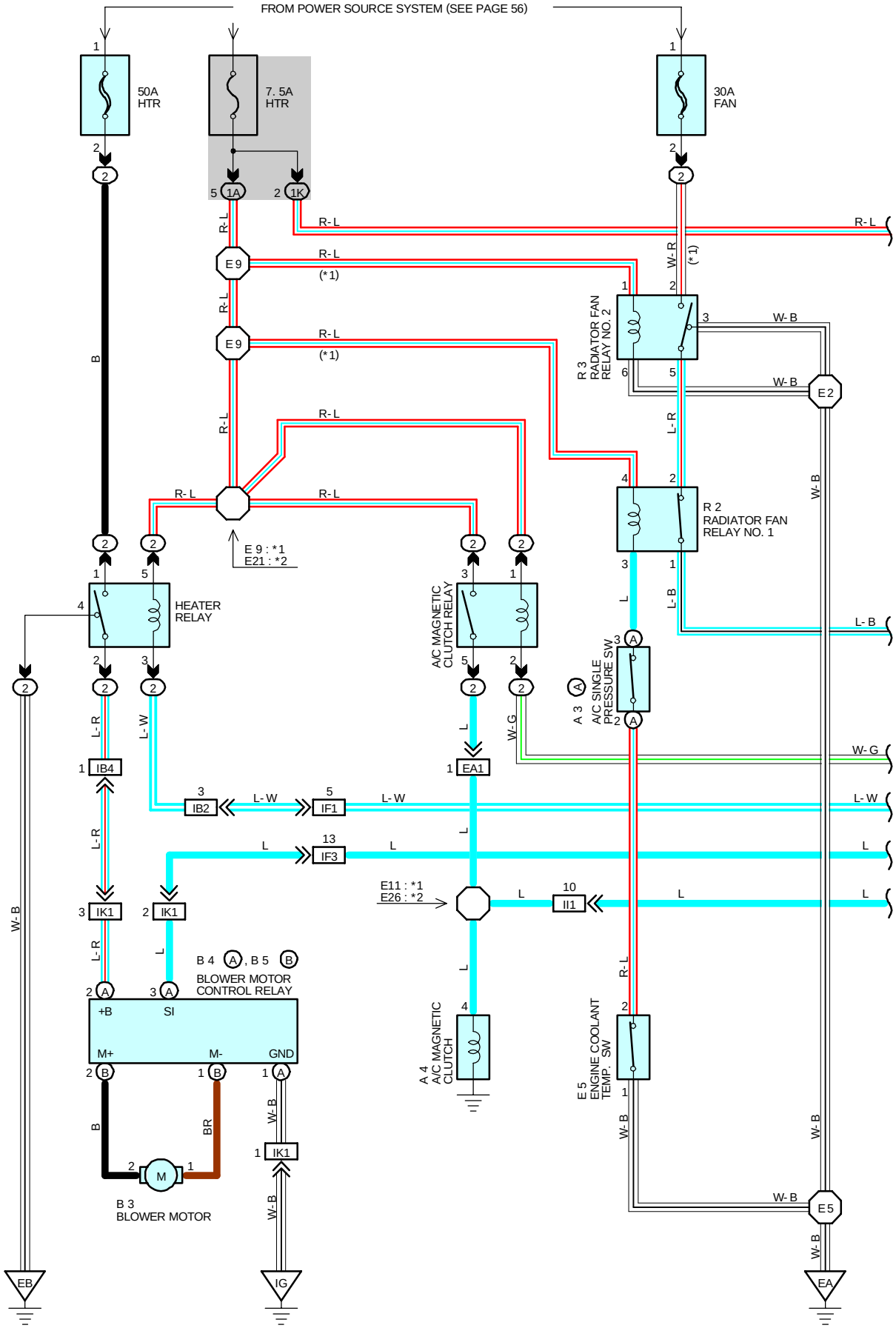
FROM POWER SOURCE SYSTEM (SEE PAGE 56)
50A HTR
7. 5A HTR
30A FAN
1A
1K
E 9
(*1)
R 3 RADIATOR FAN RELAY NO. 2
R 2 RADIATOR FAN RELAY NO. 1
E 9 : *1
E21 : *2
HEATER RELAY
A/C MAGNETIC CLUTCH RELAY
A 3 A/C SINGLE PRESSURE SW
E2
IB4
IB2
IF1
EA1
IF3
II1
IK1
E11 : *1
E26 : *2
B 4 A , B 5 B
BLOWER MOTOR CONTROL RELAY
+B
SI
M+
M-
GND
B 3 BLOWER MOTOR
A 4 A/C MAGNETIC CLUTCH
E 5 ENGINE COOLANT TEMP. SW
E5
EB
IG
EA

*1 : 2JZ- GTE
*2 : 2JZ- GE

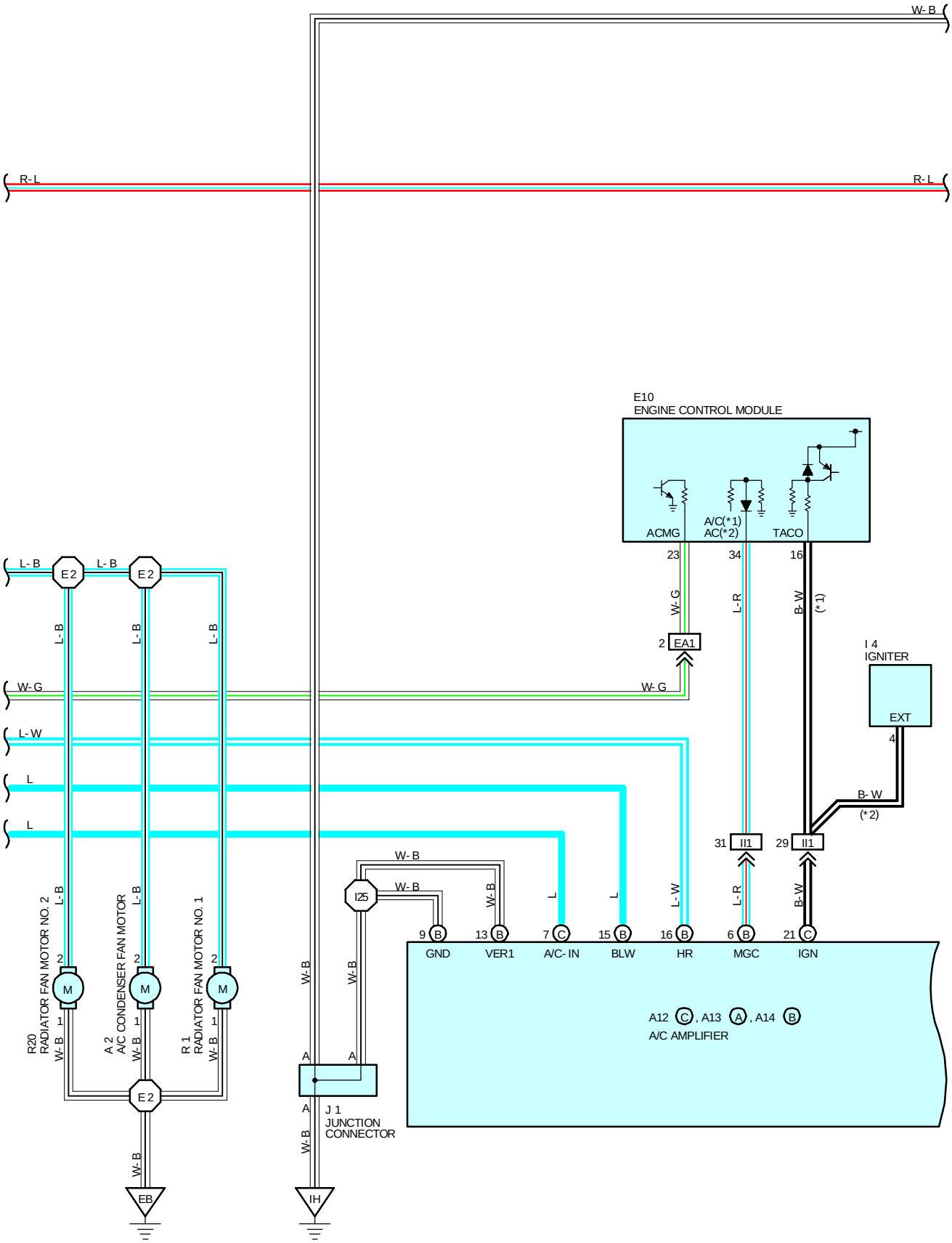

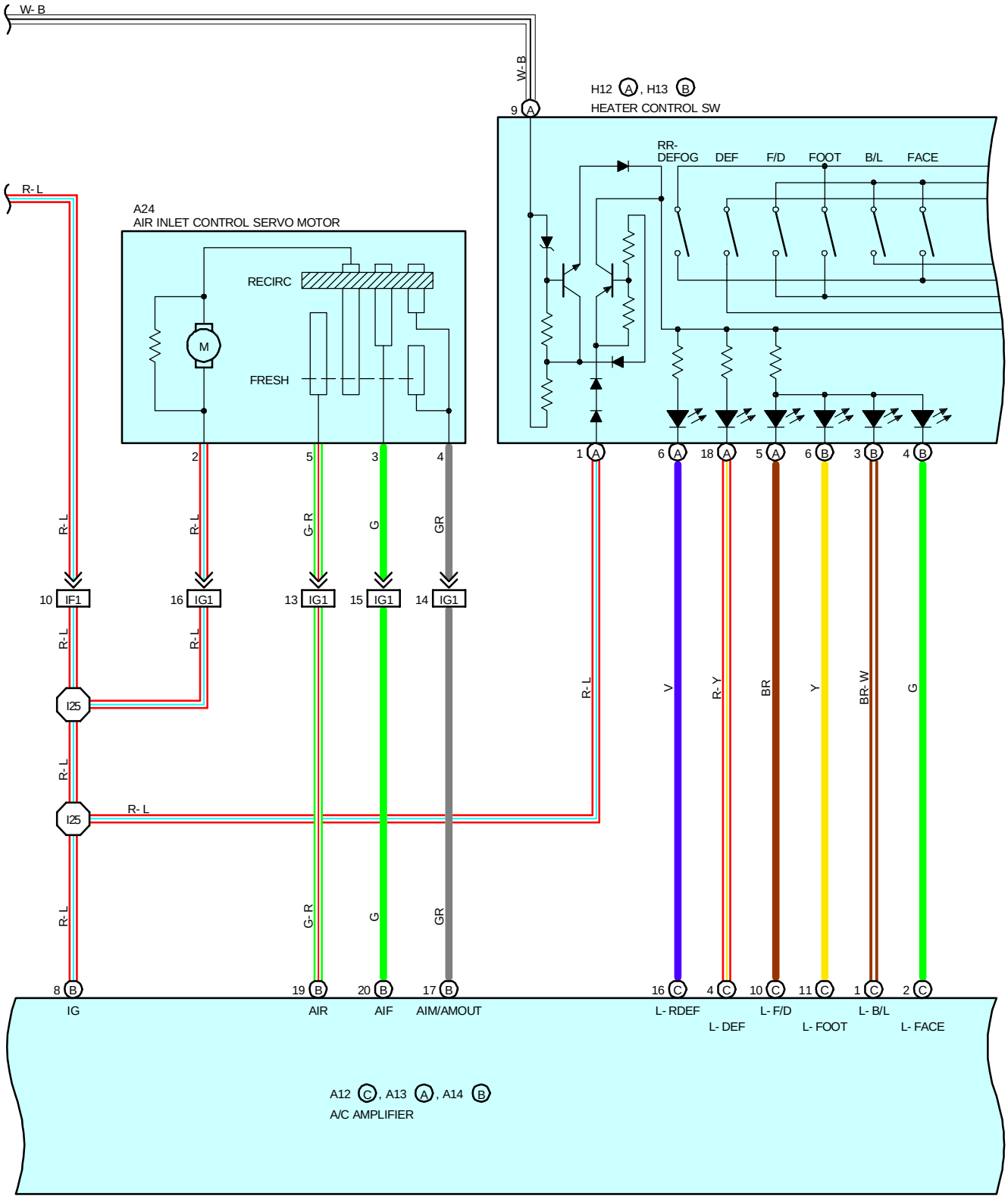
W- B
W- B
9 A
H12 A, H13 B
HEATER CONTROL SW
RR- DEFOG
DEF
F/D
FOOT
B/L
FACE
R- L
A24
AIR INLET CONTROL SERVO MOTOR
RECIRC
FRESH
M
2
5
3
4
1 A
6 A
18 A
5 A
6 B
3 B
4 B
R- L
R- L
G- R
G
GR
10 IF1
16 IG1
13 IG1
15 IG1
14 IG1
R- L
R- L
I25
R- L
I25
R- L
R- L
G- R
G
GR
R- L
V
R- Y
BR
Y
BR- W
G
8 B
19 B
20 B
17 B
16 C
4 C
10 C
11 C
1 C
2 C
IG
AIR
AIF
AIM/AMOUT
L- RDEF
L- DEF
L- F/D
L- FOOT
L- B/L
L- FACE
A12 C, A13 A, A14 B
A/C AMPLIFIER

*1 : 2JZ- GTE
*2 : 2JZ- GE

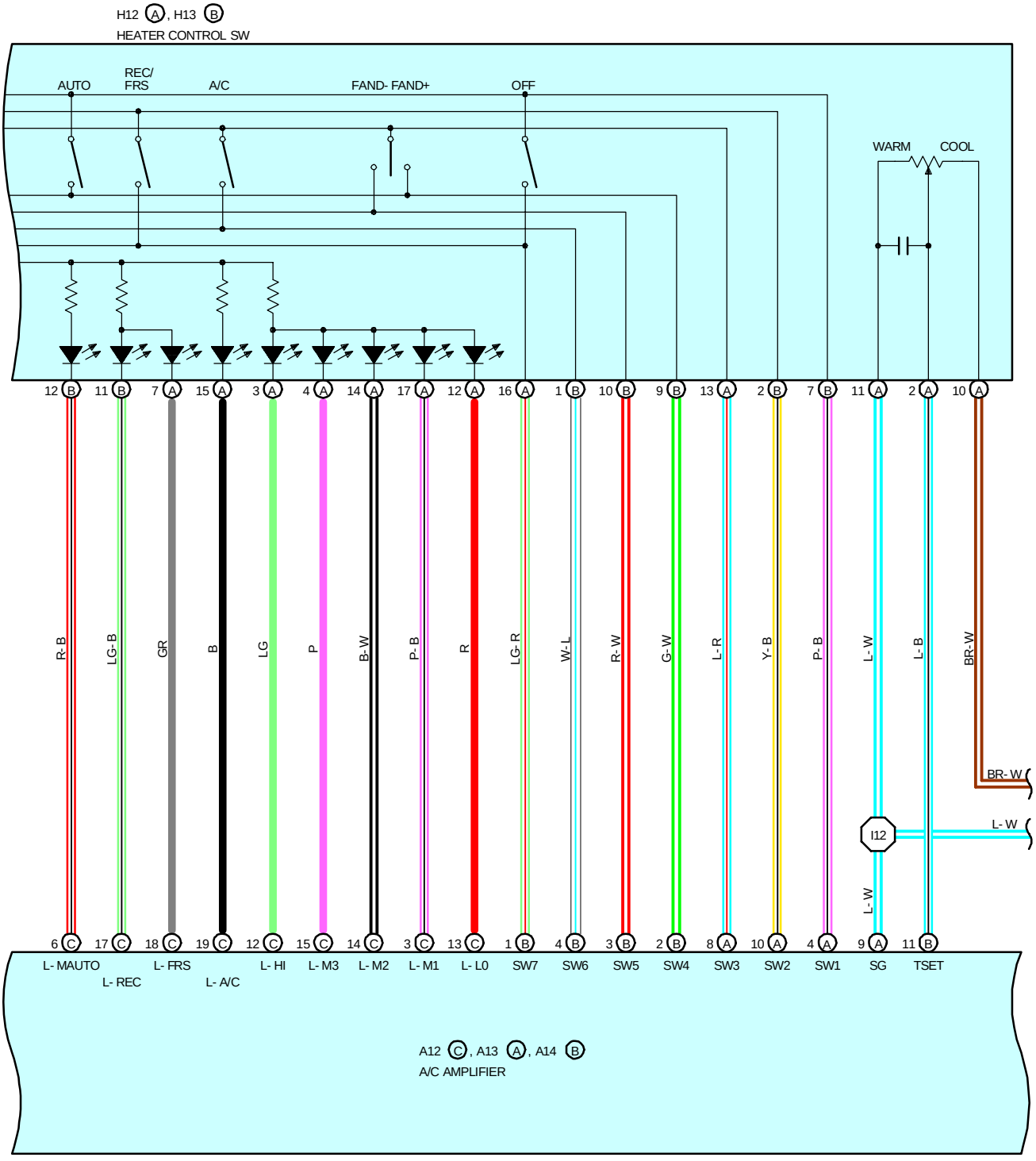

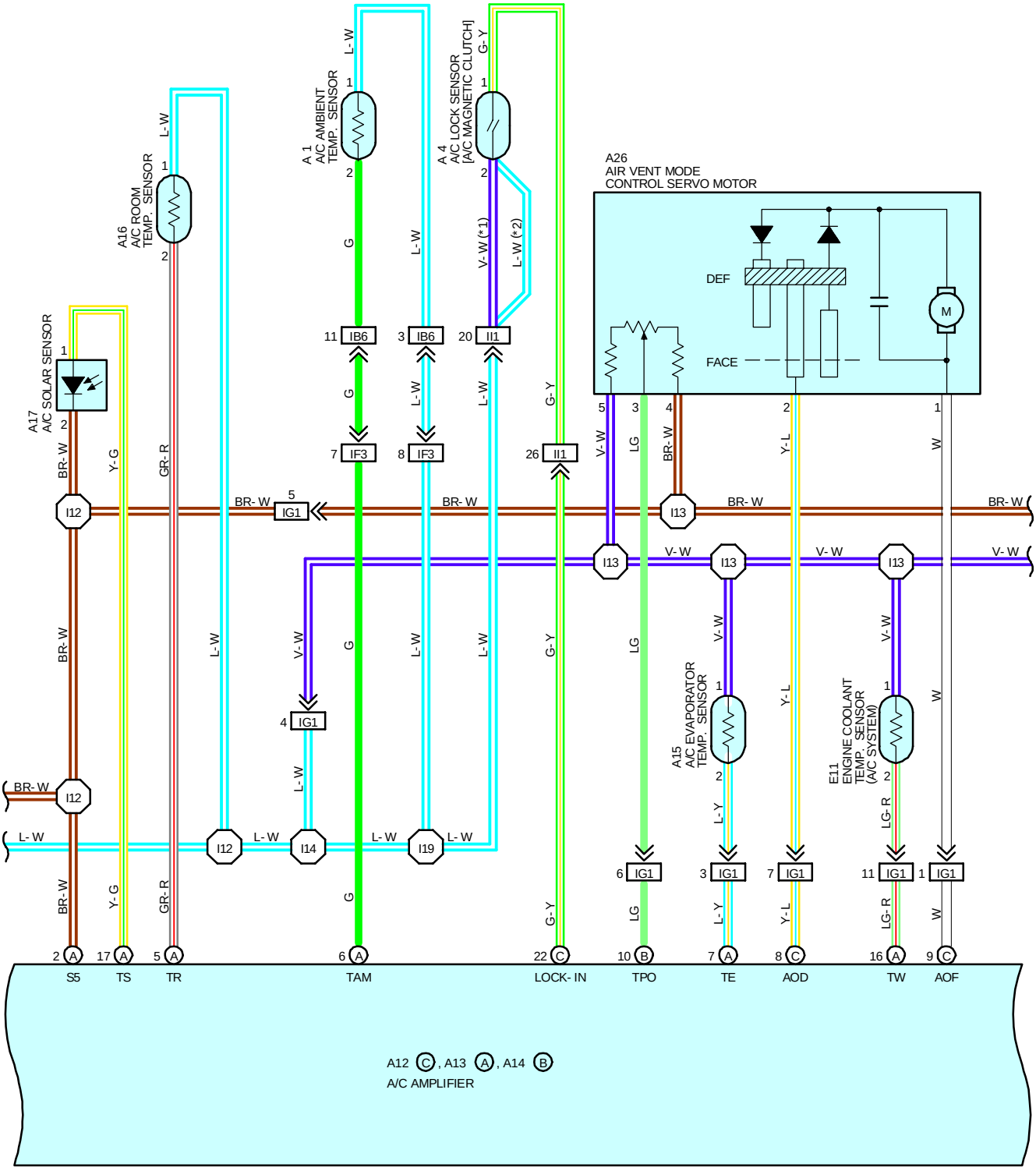
A17
A/C SOLAR SENSOR
A16
A/C ROOM
TEMP. SENSOR
A 1
A/C AMBIENT
TEMP. SENSOR
A 4
A/C LOCK SENSOR
[A/C MAGNETIC CLUTCH]
A26
AIR VENT MODE
CONTROL SERVO MOTOR
DEF
FACE
M
A15
A/C EVAPORATOR
TEMP. SENSOR
E11
ENGINE COOLANT
TEMP. SENSOR
(A/C SYSTEM)
I12
I13
I14
I19
IB6
IF3
II1
IG1
S5
TS
TR
TAM
LOCK- IN
TPO
TE
AOD
TW
AOF
A12 C, A13 A, A14 B
A/C AMPLIFIER

*1 : 2JZ- GTE
*2 : 2JZ- GE

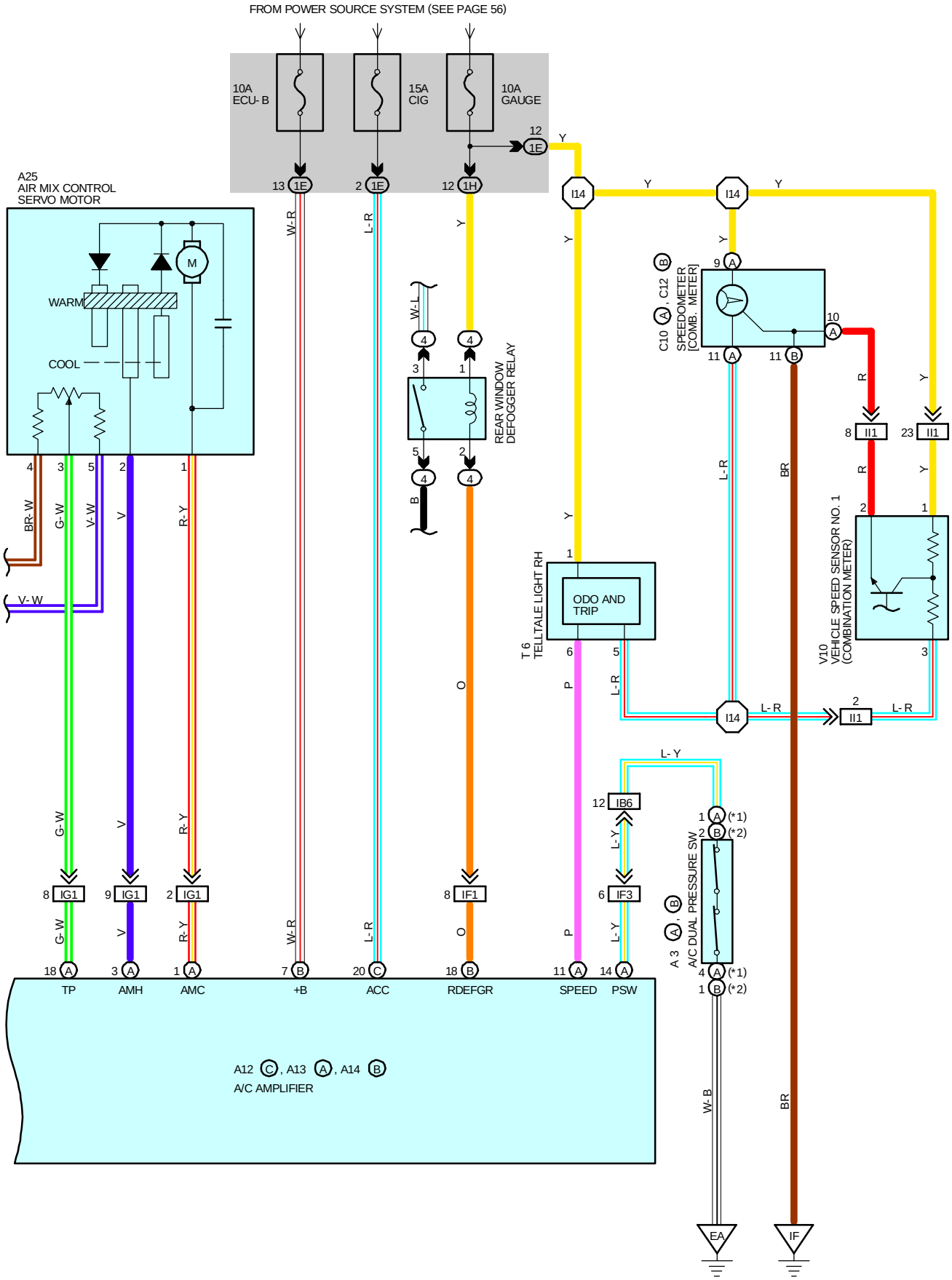

SERVICE HINTS

A4 A/C MAGNETIC CLUTCH

4-GROUND : APPROX. **3.7** Ω

A3 (A) A/C DUAL PRESSURE SW [A/C TRIPLE PRESSURE SW] (2JZ-GTE)

(A)1 -(A) 4 : OPEN ABOVE APPROX. **225** KPA (**33** PSI, **2.3** KG/CM^2) OR **3140** KPA (**458** PSI, **32** KG/CM^2)

A3 (B) A/C DUAL PRESSURE SW (2JZ-GE)

(B)1- (B)2 : OPEN ABOVE APPROX. **225** KPA (**33** PSI, **2.3** KG/CM^2) OR **3140** KPA (**458** PSI, **32** KG/CM^2)

A12 (C), A13 (A), A14 (B) A/C AMPLIFIER

+B-GROUND : ALWAYS APPROX. **10-14** VOLTS

IG-GROUND : APPROX. **10-14** VOLTS WITH THE IGNITION SW AT **ON** POSITION

HR-GROUND : APPROX. **10-14** VOLTS WITH THE IGNITION SW AT **ON** POSITION AND DO NOT TURN THE BLOWER MOTOR BELOW **1** VOLT WITH THE IGNITION SW AT **ON** POSITION AND TURN THE BLOWER MOTOR

ACC-GROUND : APPROX. **10-14** VOLTS WITH THE IGNITION SW AT **ACC** OR **ON** POSITION

TW-GROUND : **10-14** VOLTS AT START THE ENGINE AND MAX. COLD POSITION OF THE A/C TEMP. CONTROL SW BELOW **1** VOLT AT START THE ENGINE AND MAX. WARM POSITION OF THE A/C TEMP. CONTROL SW

MGC-GROUND :BELOW **1** VOLT AT START THE ENGINE, PUSH THE A/C AUTO SW AND THE A/C SW **ON** POSITION
10-14 VOLTS AT START THE ENGINE, PUSH THE A/C AUTO SW AND THE A/C SW **OFF** POSITION

BLW-GROUND : **1.0-3.0** VOLTS WITH THE IGNITION SW ON AND TURN THE BLOWER MOTOR

S5-GROUND : **4-6** VOLTS WITH THE IGNITION SW ON

SG-GROUND : ALWAYS CONTINUITY

AMH-AMC : **13-19** VOLTS WITH THE IGNITION SW OFF

AOF-GROUND : APPROX. **12** VOLTS WITH THE FACE SW ON

AOD-GROUND : APPROX. **12** VOLTS WITH THE DEF SW ON

GND-GROUND : ALWAYS CONTINUITY

○ : PARTS LOCATION

CODE		SEE PAGE	CODE		SEE PAGE	CODE		SEE PAGE
A1		24 (2JZ-GTE)	A17		28	H12	A	29
		26 (2JZ-GE)	A24		28	H13	B	29
A2		24	A25		28	I4		27
A3	A	24 (2JZ-GTE)	A26		28	J1		29
	B	26 (2JZ-GE)	B3		28	R1		25
A4		24 (2JZ-GTE)	B4	A	28	R2		25
		26 (2JZ-GE)	B5	B	28	R3		25
A12	C	28	C10	A	28	R20		25
A13	A	28	C12	B	28	T6		29
A14	B	28	E5		24	V10		25 (2JZ-GTE)
A15		28	E10		29			27 (2JZ-GE)
A16		28	E11		29			

▭ : RELAY BLOCKS

CODE	SEE PAGE	RELAY BLOCKS (RELAY BLOCK LOCATION)
2	22	R/B NO. 2 (ENGINE COMPARTMENT LEFT)
4	23	R/B NO. 4 (LEFT KICK PANEL)

⬭ : JUNCTION BLOCK AND WIRE HARNESS CONNECTOR

CODE	SEE PAGE	JUNCTION BLOCK AND WIRE HARNESS (CONNECTOR LOCATION)
1A	20	ENGINE ROOM MAIN WIRE AND J/B NO. 1 (LEFT KICK PANEL)
1E	20	INSTRUMENT PANEL WIRE AND J/B NO. 1(LEFT KICK PANEL)
1H	20	COWL WIRE AND J/B NO. 1 (LEFT KICK PANEL)
1K		

▭ : CONNECTOR JOINING WIRE HARNESS AND WIRE HARNESS

CODE	SEE PAGE	JOINING WIRE HARNESS AND WIRE HARNESS (CONNECTOR LOCATION)
EA1	32 (2JZ-GTE)	ENGINE WIRE AND ENGINE ROOM MAIN WIRE (NEAR THE R/B NO. 2)
	34 (2JZ-GE)	
IB2	36	ENGINE ROOM MAIN WIRE AND COWL WIRE (LEFT KICK PANEL)
IB4	36	ENGINE ROOM MAIN WIRE AND COWL WIRE (RIGHT KICK PANEL)
IB6		
IF1	36	INSTRUMENT PANEL WIRE AND COWL WIRE (INSTRUMENT PANEL REINFORCEMENT LH)
IF3	36	INSTRUMENT PANEL WIRE AND COWL WIRE (RIGHT KICK PANEL)
IG1	38	INSTRUMENT PANEL WIRE AND COWL NO. 3 WIRE (BEHIND HEATER CONTROL SW)
II1	38	ENGINE WIRE AND INSTRUMENT PANEL WIRE (RIGHT KICK PANEL)
IK1	38	COWL NO. 4 WIRE AND COWL WIRE (RIGHT KICK PANEL)

: GROUND POINTS

CODE	SEE PAGE	GROUND POINTS LOCATION
EA	32 (2JZ-GTE) 34 (2JZ-GE)	FRONT SIDE OF RIGHT FENDER
EB	32 (2JZ-GTE) 34 (2JZ-GE)	FRONT SIDE OF LEFT FENDER
IF	36	LEFT KICK PANEL
IG IH	36	RIGHT KICK PANEL

: SPLICE POINTS

CODE	SEE PAGE	WIRE HARNESS WITH SPLICE POINTS	CODE	SEE PAGE	WIRE HARNESS WITH SPLICE POINTS
E2			I12	38	INSTRUMENT PANEL WIRE
E5	32	ENGINE ROOM MAIN WIRE	I13	38	COWL NO. 3 WIRE
E9			I14		
E11	32	ENGINE WIRE	I19	38	INSTRUMENT PANEL WIRE
E21	34	ENGINE ROOM MAIN WIRE	I25		
E26	34	ENGINE WIRE			

A 1 BLACK



A 2 BLACK



(2JZ-GTE) A 3 (A) BLACK

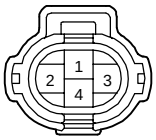

(2JZ-GE) A 3 (B) GRAY

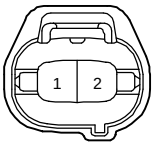

A 4 GRAY



A12 (C) ORANGE

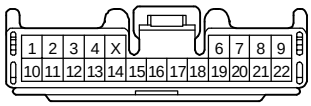

A13 (A) ORANGE

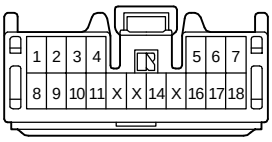

A14 (B) ORANGE

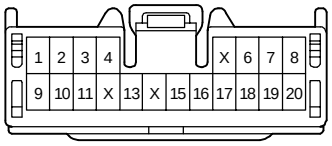

A15



A16 BLACK

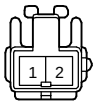

A17 GRAY



A24

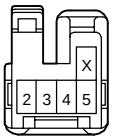

A25

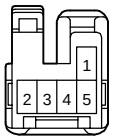

A26

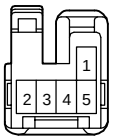

B 3 BLACK

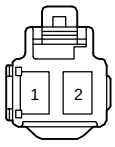

B 4 (A) BLACK

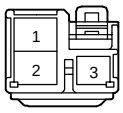

B 5 (B) BLACK

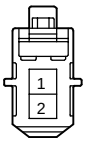

C10 (A) BLUE

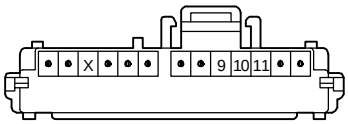

C12 (B)

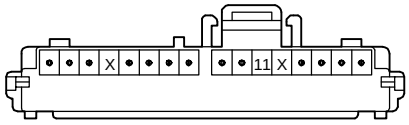

E 5 DARK GRAY



(2JZ-GTE) E10 DARK GRAY

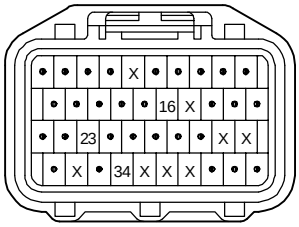

(2JZ- GE) E10 DARK GRAY

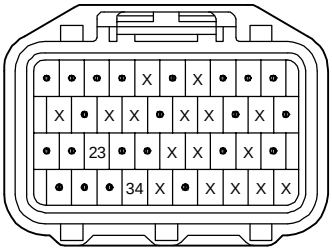
X X X

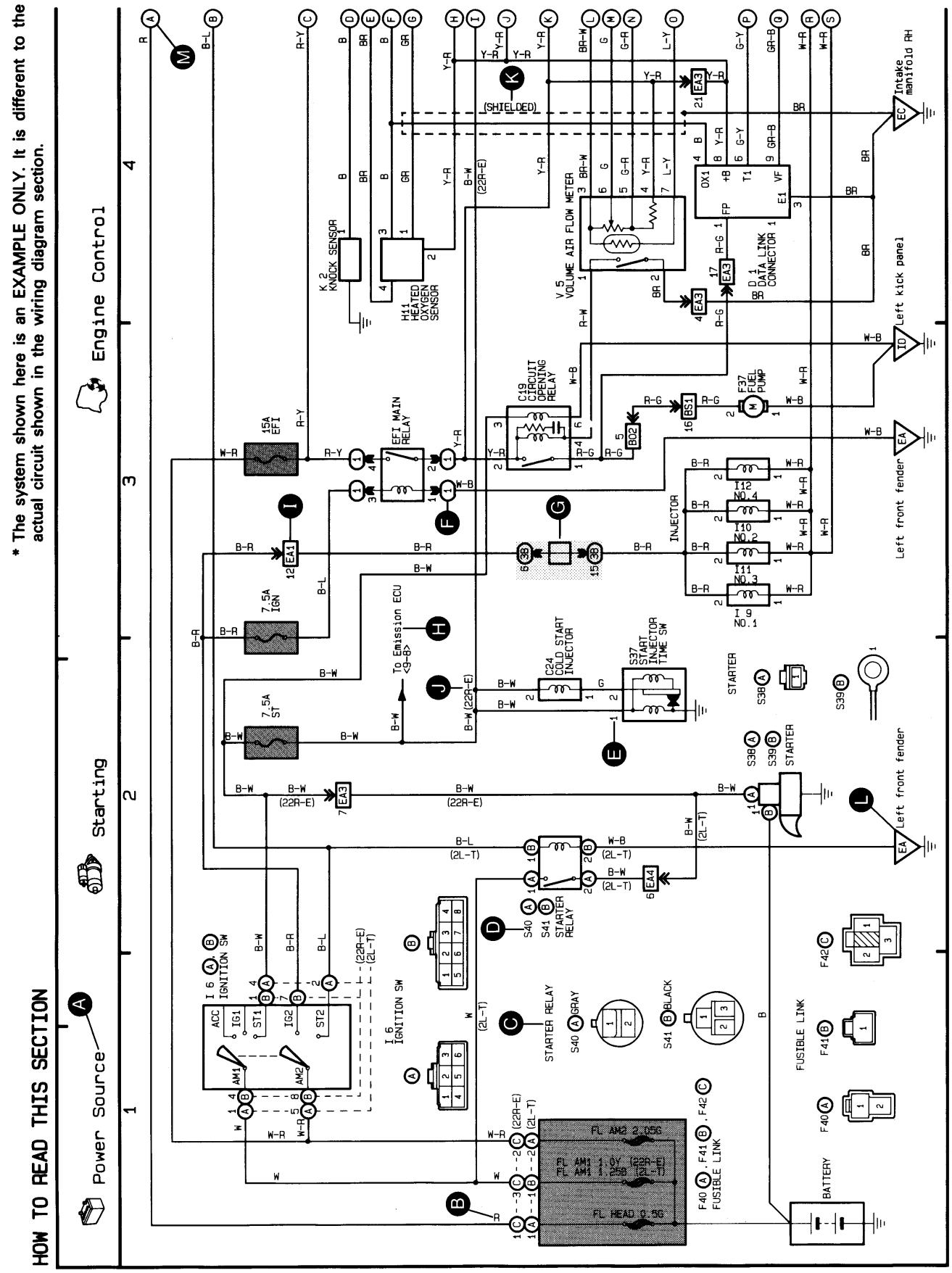
* The system shown here is an EXAMPLE ONLY. It is different to the actual circuit shown in the wiring diagram section.
HOW TO READ THIS SECTION
Power Source
Starting
Engine Control
1
2
3
4
A
B
C
D
E
F
G
H
I
J
K
L
M
15A EFI
7.5A IGN
7.5A ST
EFI MAIN RELAY
C19 CIRCUIT OPENING RELAY
K2 KNOCK SENSOR
H11 HEATED OXYGEN SENSOR
V5 VOLUME AIR FLOW METER
D1 DATA LINK CONNECTOR 1
F37 FUEL PUMP
INJECTOR
I12 NO.4
I10 NO.2
I11 NO.3
I9 NO.1
C24 COLD START INJECTOR
S37 START INJECTOR TIME SW
To Emission ECU <9-8>
STARTER
S38
S39
I6 IGNITION SW
ACC
IG1
ST1
IG2
ST2
AM1
AM2
STARTER RELAY
S40 GRAY
S41 BLACK
FUSIBLE LINK
F42
F41
F40
BATTERY
FL AM2 2.0SG
FL AM1 1.0Y (22R-E)
FL AM1 1.25B (2L-T)
FL HEAD 0.5G
Intake manifold RH
Left kick panel
Left front fender
(SHIELDED)

Ⓐ: System Title

Ⓑ: Indicates the wiring color.

Wire colors are indicated by an alphabetical code.

B	= Black	L	= Blue	R	= Red
BR	= Brown	LG	= Light Green	V	= Violet
G	= Green	O	= Orange	W	= White
GR	= Gray	P	= Pink	Y	= Yellow

The first letter indicates the basic wire color and the second letter indicates the color of the stripe.

Example: L – Y

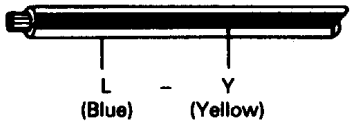

Ⓒ: Indicates the connector to be connected to a part (the numeral indicates the pin No.)

Ⓓ: The position of the parts is the same as shown in the wiring diagram and wire routing.

Ⓔ: Indicates the pin number of the connector. The numbering system is different for female and male connectors.

Example: Numbered in order from upper left to lower right

Numbered in order from upper right to lower left

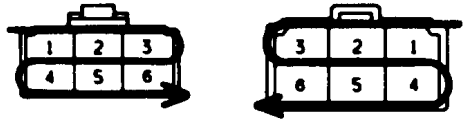

The numbering system for the overall wiring diagram is the same as above.

Ⓕ: Indicates a Relay Block. No shading is used and only the Relay Block No. is shown to distinguish it from the J/B.

Example: ① Indicates Relay Block No. 1.

Ⓖ: Junction Block (The number in the circle is the J/B No. and the connector code is shown beside it). Junction Blocks are shaded to clearly separate them from other parts (different junction blocks are shaded differently for further clarification).

Example:

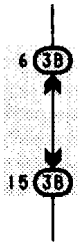

3B indicates that it is inside Junction Block No. 3.

Ⓗ: Indicates related system.

Ⓘ: Indicates the wiring harness and wiring harness connector. The wiring harness with male terminal is shown with arrows (≫). Outside numerals are pin numbers.

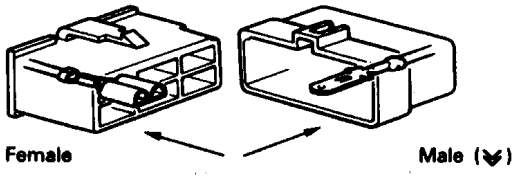

Ⓙ: ( ) is used to indicate different wiring and connector, etc. when the vehicle model, engine type, or specification is different.

Ⓚ: Indicates a shielded cable.



Ⓛ: Indicates and located on ground point.

Ⓜ: The same code occuring on the next page indicates that the wire harness is continuous.

SYSTEM INDEX

1997 Model (Location No. 1 to 27)

SYSTEMS	LOCATION
ABS	19-3 (w/ Traction Control) 18-3 (w/o Traction Control)
Auto Antenna	25-4
Back-Up Light	16-8 (2JZ-GE) 15-8 (2JZ-GTE)
Charging	1-4
Cigarette Lighter	22-1
Clock	21-3
Combination Meter	26-3
Cruise Control	17-3
Electric Tension Reducer	21-4
Electronically Controlled Transmission and A/T Indicator	16-3 (2JZ-GE) 15-3 (2JZ-GTE)
Engine Control	4-3 (2JZ-GE) 3-3 (2JZ-GTE)
Fog Light	5-4
Front Wiper and Washer	23-4
Headlight	6-3 (Canada) 5-3 (USA)
Horn	9-4
Ignition	2-4 (2JZ-GE) 2-2 (2JZ-GTE)
Illumination	8-3
Interior Light	10-3
Light Auto Turn Off	11-2
Power Seat	12-4
Power Source	1~27-1
Power Window	12-2
PPS	21-3
Radiator Fan and Automatic Air Conditioning	27-3
Radio and Player	24-3 (w/ Stereo Power Amplifier) 25-2 (w/o Stereo Power Amplifier)
Rear Window Defogger and Mirror Heater	21-2
Rear Wiper and Washer	23-2
Remote Control Mirror	11-4
Seat Heater (Canada)	22-4
Shift Lock	22-2
SRS	13-3
Starting	1-2
Stop Light	7-4
Taillight	7-2
Theft Deterrent and Door Lock Control	14-3
Traction Control	20-3
Turn Signal and Hazard Warning Light	9-2
Unlock and Seat Belt Warning	10-2

1 SUPRA ELECTRICAL WIRING DIAGRAM

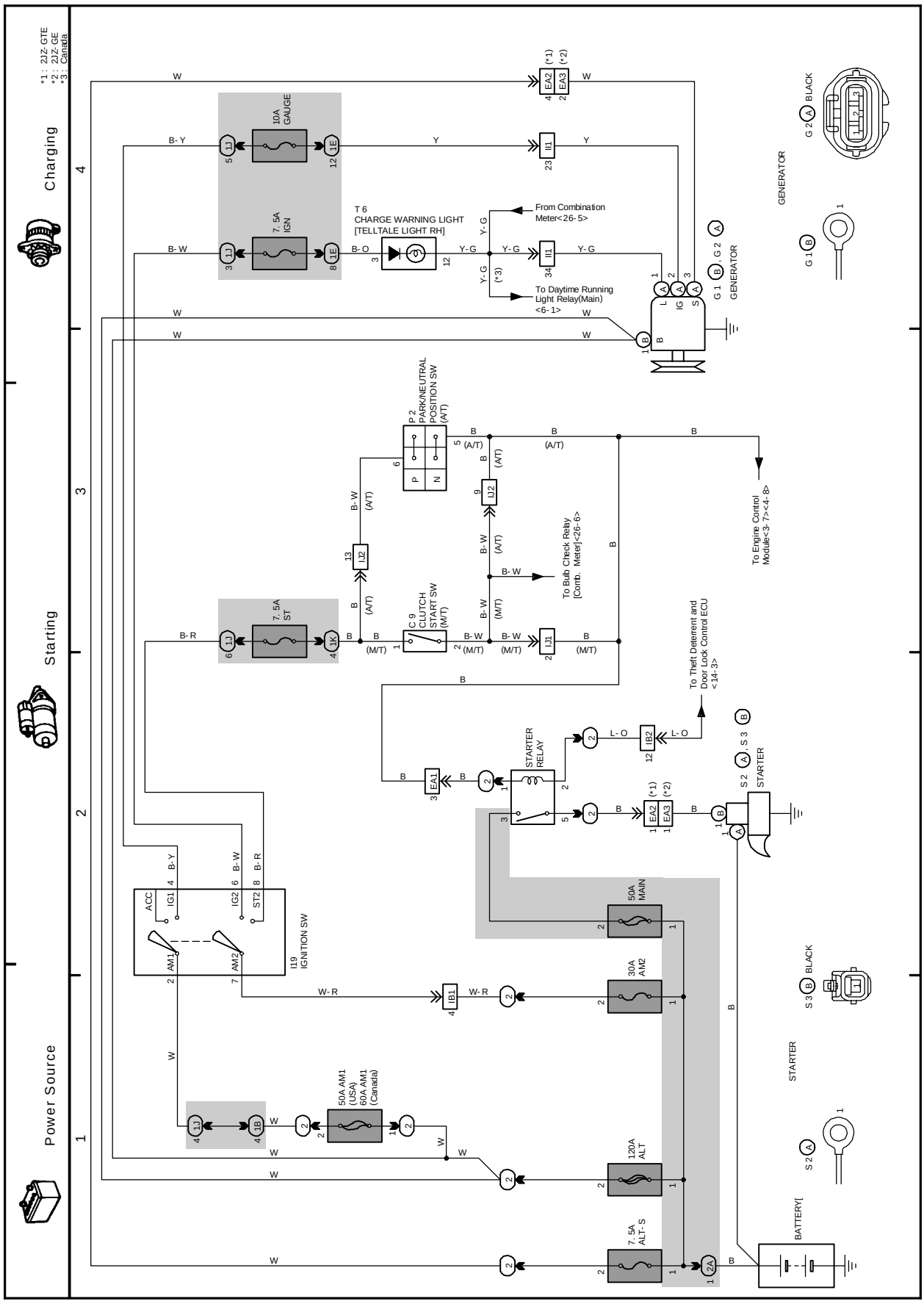

K OVERALL ELECTRICAL WIRING DIAGRAM

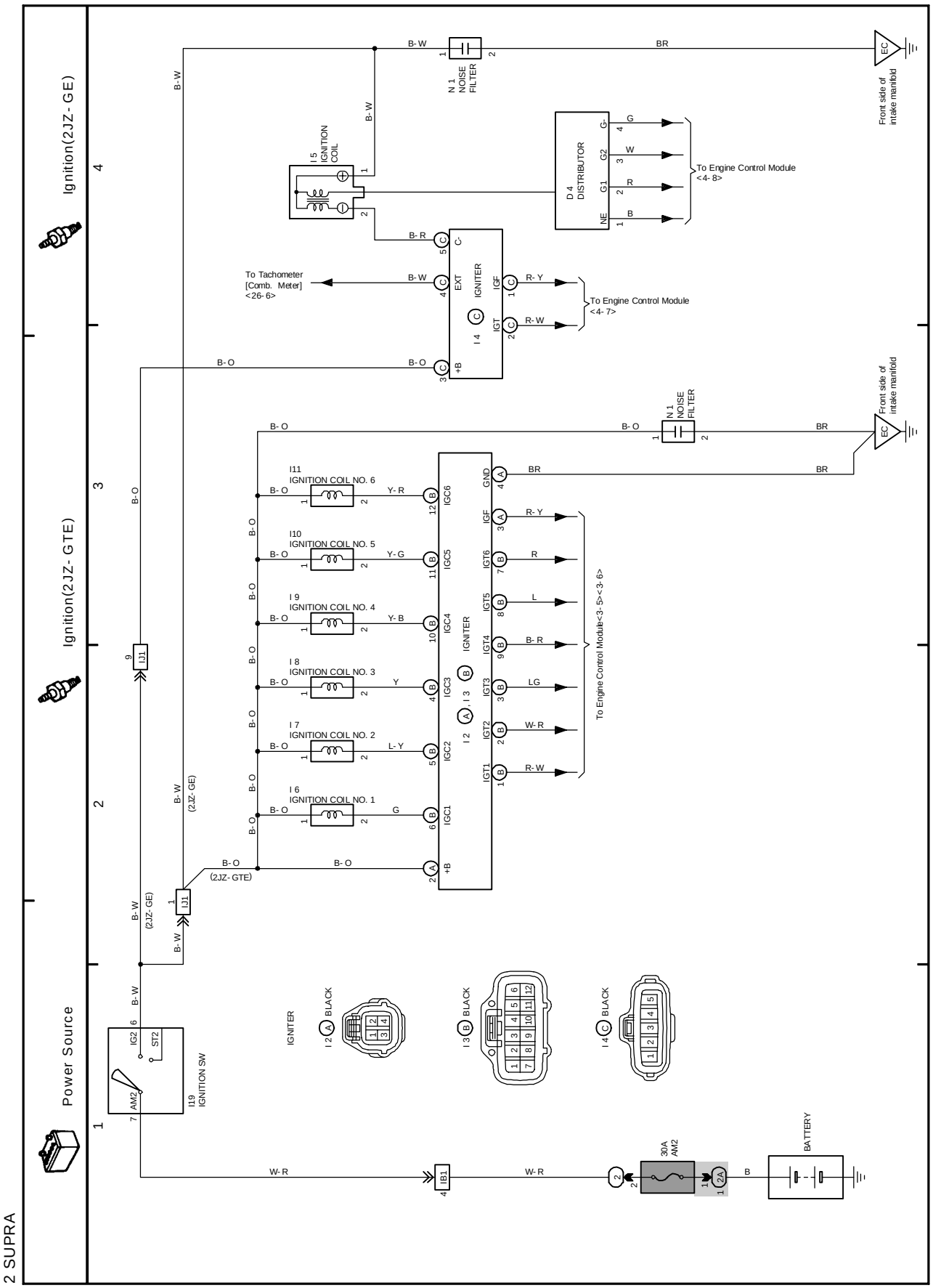

K OVERALL ELECTRICAL WIRING DIAGRAM

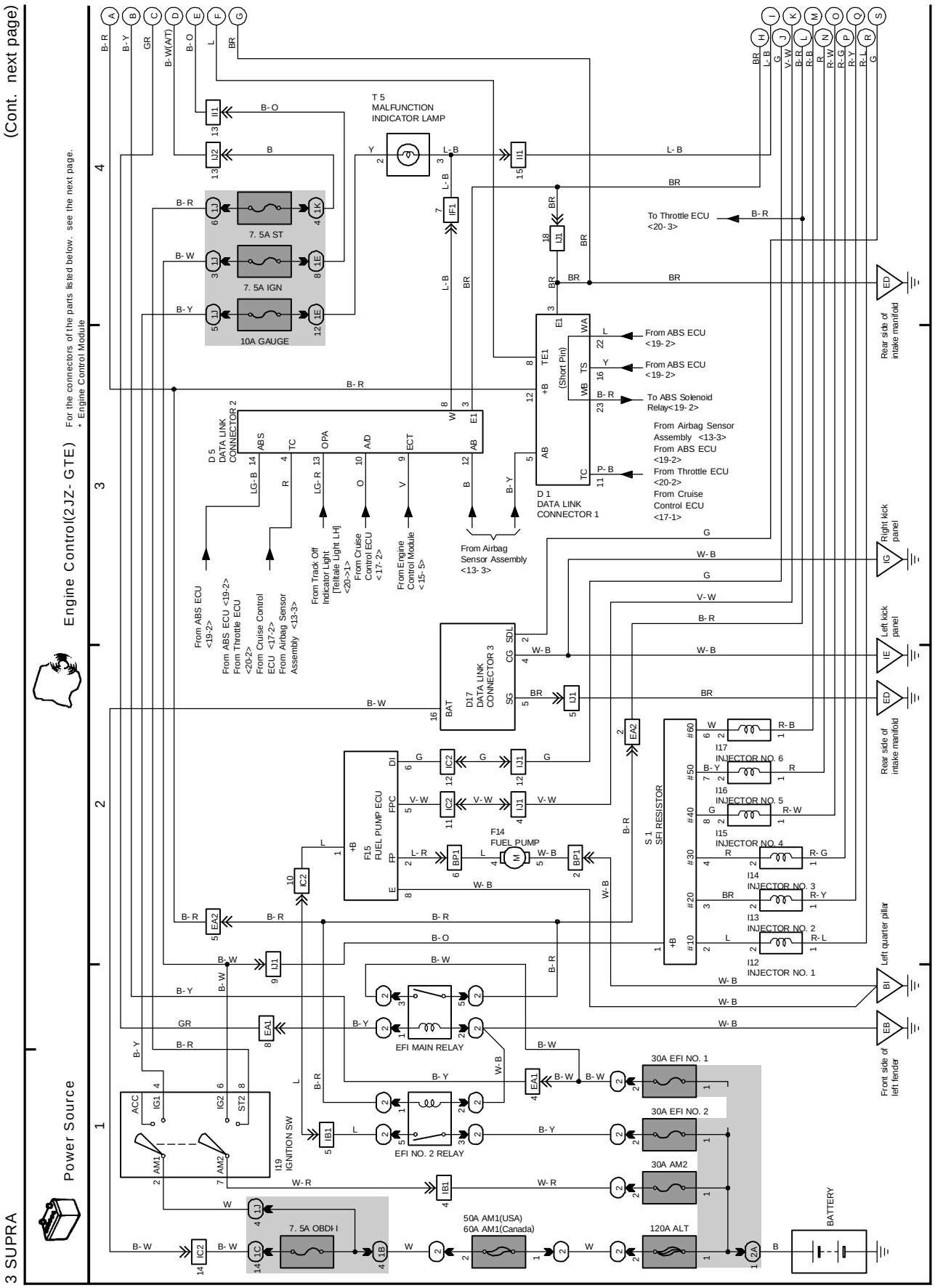

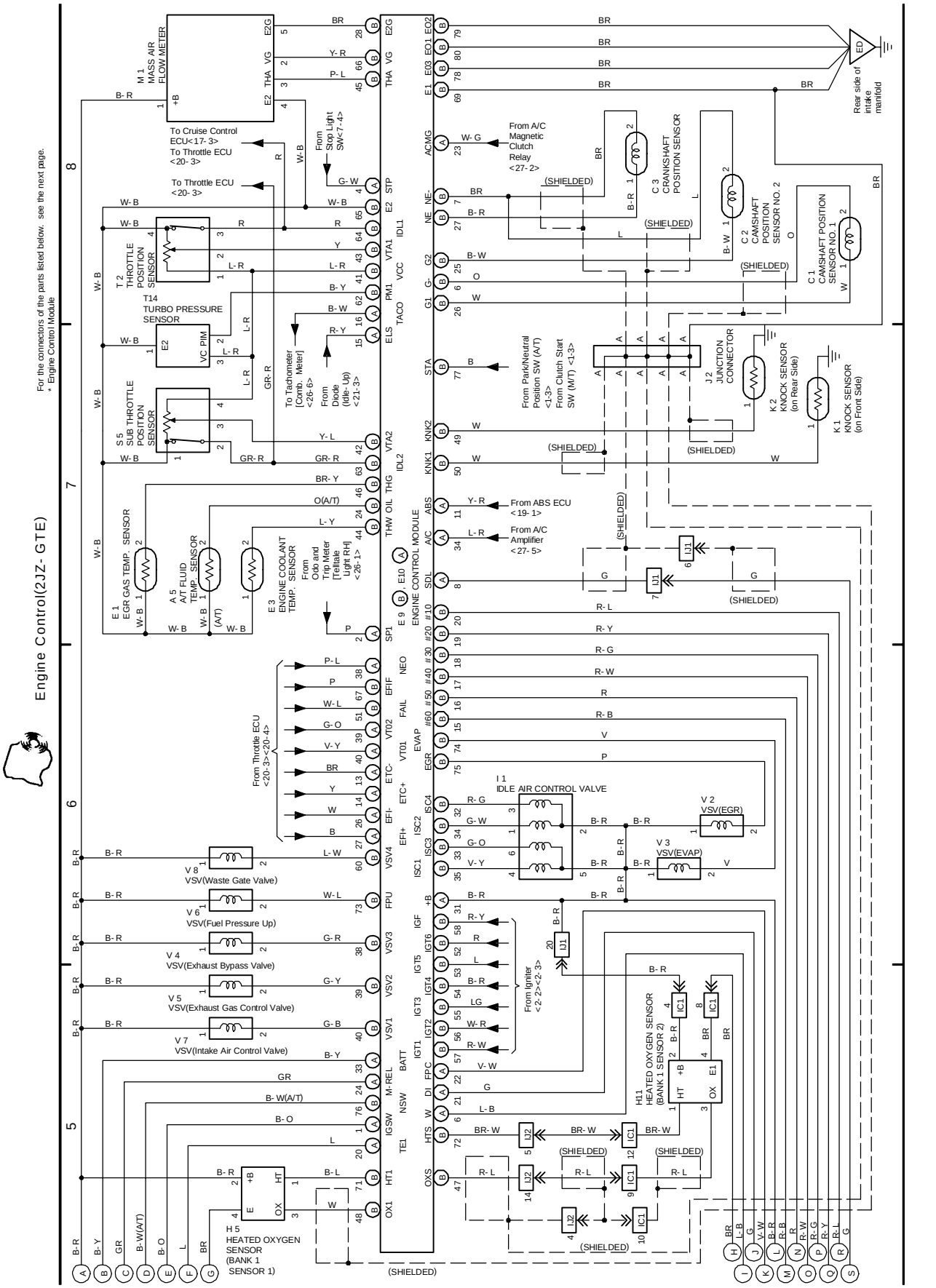
3 SUPRA(Cont' d)
(Cont. next page)
Engine Control(2JZ- GTE)
For the connectors of the parts listed below, see the next page.
* Engine Control Module
M 1 MASS AIR FLOW METER
To Cruise Control ECU<17- 3>
To Throttle ECU <20- 3>
From Stop Light SW<7- 4>
T 2 THROTTLE POSITION SENSOR
T14 TURBO PRESSURE SENSOR
S 5 SUB THROTTLE POSITION SENSOR
To Tachometer [Comb. Meter] <26- 6>
From Diode (Idle- Up) <21- 3>
E 1 EGR GAS TEMP. SENSOR
A 5 A/T FLUID TEMP. SENSOR (A/T)
E 3 ENGINE COOLANT TEMP. SENSOR
From Odo and Trip Meter [Telltale Light RH] <26- 1>
E 9, E10 ENGINE CONTROL MODULE
From Throttle ECU <20- 3><20- 4>
V 8 VSV(Waste Gate Valve)
V 6 VSV(Fuel Pressure Up)
V 4 VSV(Exhaust Bypass Valve)
V 5 VSV(Exhaust Gas Control Valve)
V 7 VSV(Intake Air Control Valve)
H 5 HEATED OXYGEN SENSOR (BANK 1 SENSOR 1)
I 1 IDLE AIR CONTROL VALVE
V 2 VSV(EGR)
V 3 VSV(EVAP)
From Ignitor <2- 2><2- 3>
H11 HEATED OXYGEN SENSOR (BANK 1 SENSOR 2)
From A/C Magnetic Clutch Relay <27- 2>
C 3 CRANKSHAFT POSITION SENSOR
C 2 CAMSHAFT POSITION SENSOR NO. 2
C 1 CAMSHAFT POSITION SENSOR NO. 1
From Park/Neutral Position SW (A/T) <1-3>
From Clutch Start SW (M/T) <1-3>
J 2 JUNCTION CONNECTOR
K 2 KNOCK SENSOR (on Rear Side)
K 1 KNOCK SENSOR (on Front Side)
From ABS ECU <19- 1>
From A/C Amplifier <27- 5>
Rear side of intake manifold
(SHIELDED)

Engine Control(2JZ- GTE)

9 | 10 | 11 | 12

ENGINE CONTROL MODULE

E 9 (B) DARK GRAY

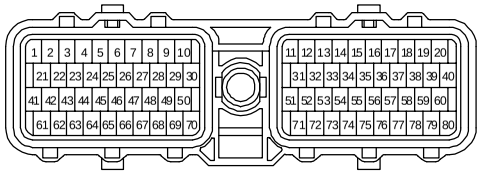

E10 (A) DARK GRAY

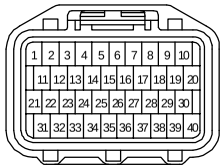

K OVERALL ELECTRICAL WIRING DIAGRAM

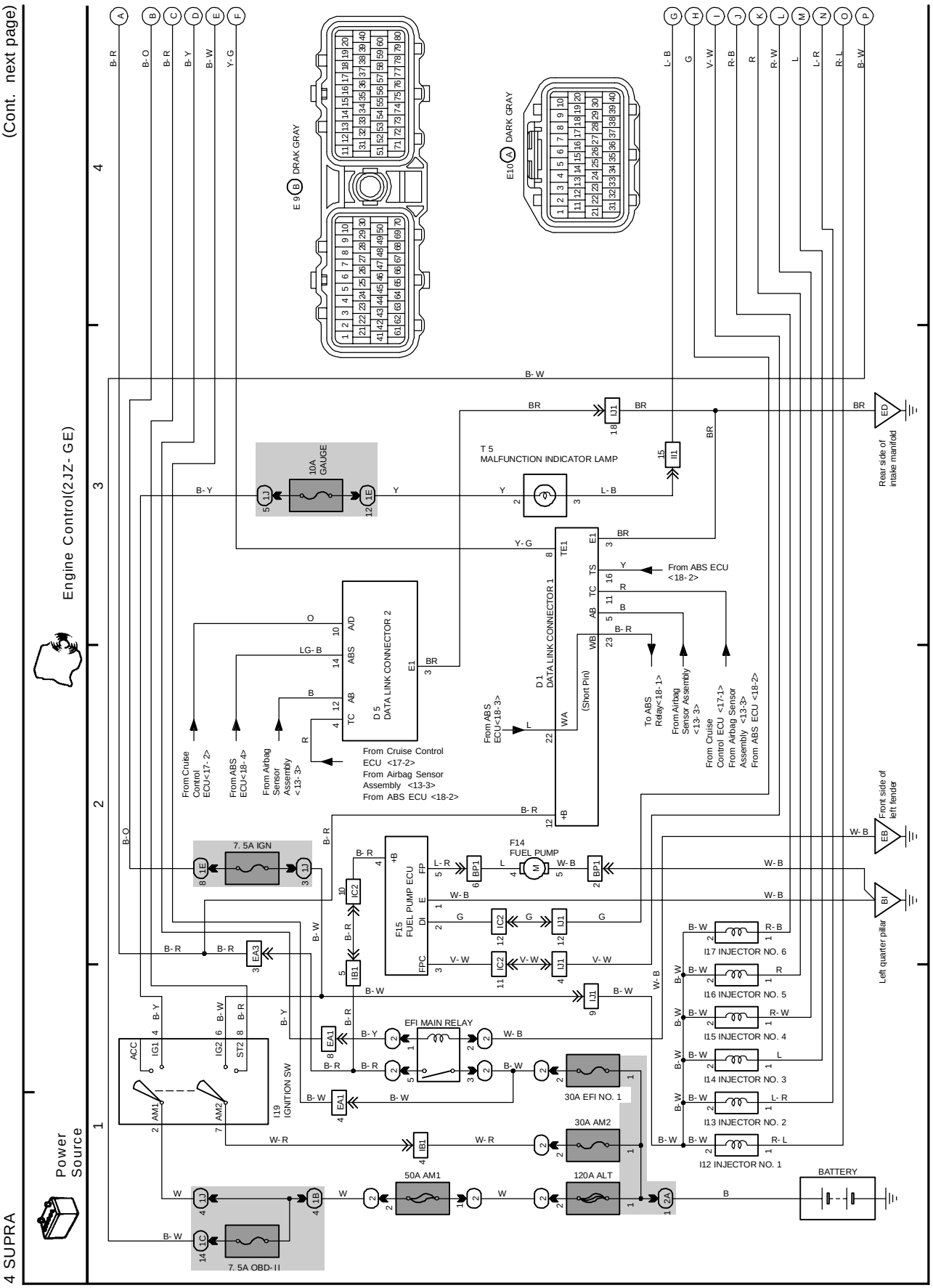

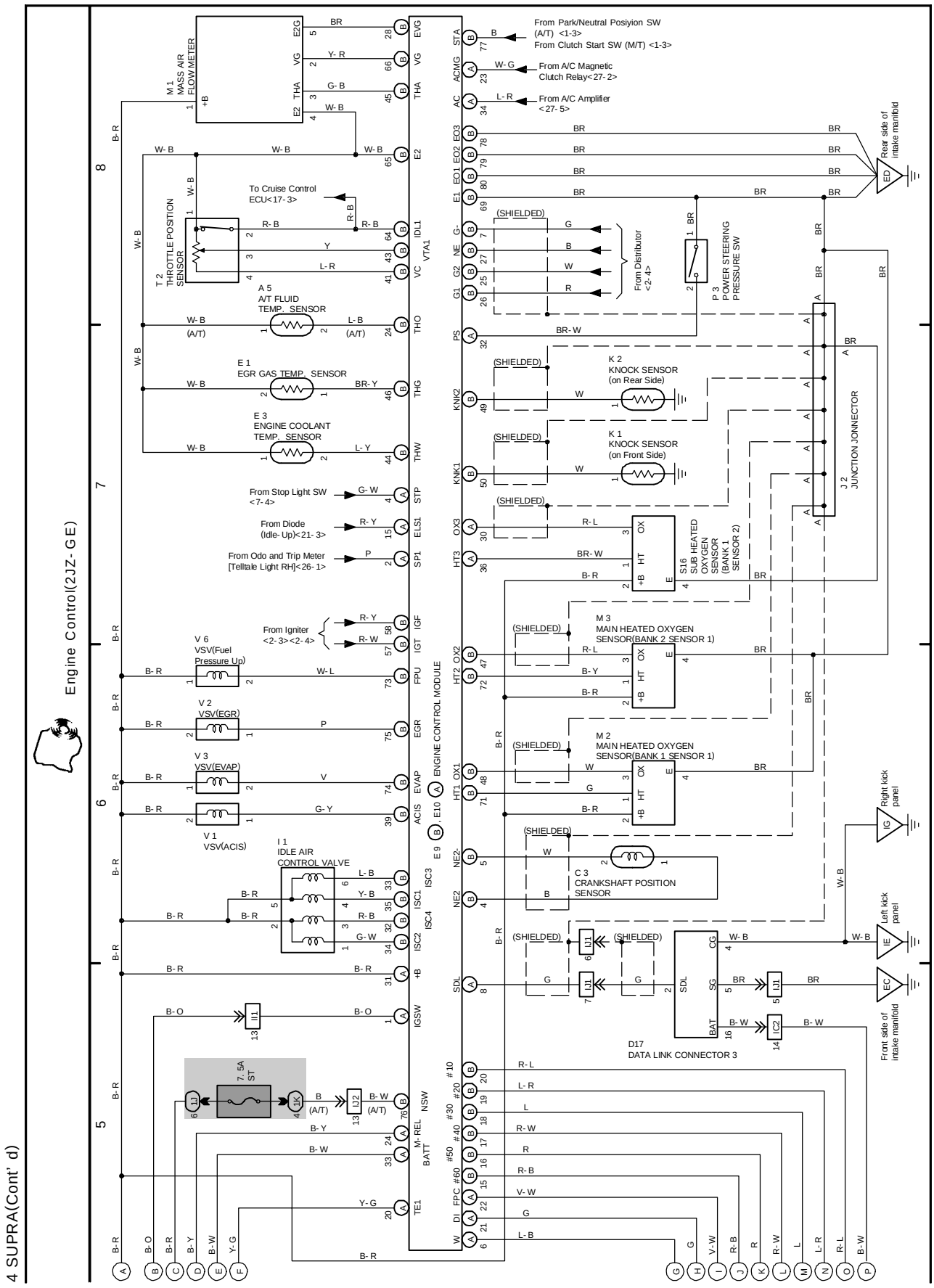
4 SUPRA(Cont' d)
Engine Control(2JZ-GE)
ENGINE CONTROL MODULE
M 1 MASS AIR FLOW METER
T 2 THROTTLE POSITION SENSOR
To Cruise Control ECU<17-3>
A 5 A/T FLUID TEMP. SENSOR
E 1 EGR GAS TEMP. SENSOR
E 3 ENGINE COOLANT TEMP. SENSOR
From Stop Light SW <7-4>
From Diode (Idle-Up)<21-3>
From Odo and Trip Meter [Telltale Light RH]<26-1>
From Igniter <2-3><2-4>
V 6 VSV(Fuel Pressure Up)
V 2 VSV(EGR)
V 3 VSV(EVAP)
V 1 VSV(ACIS)
I 1 IDLE AIR CONTROL VALVE
7.5A ST
From Park/Neutral Posiyion SW (A/T) <1-3>
From Clutch Start SW (M/T) <1-3>
From A/C Magnetic Clutch Relay<27-2>
From A/C Amplifier <27-5>
From Distributor <2-4>
P 3 POWER STEERING PRESSURE SW
K 2 KNOCK SENSOR (on Rear Side)
K 1 KNOCK SENSOR (on Front Side)
J 2 JUNCTION JONNECTOR
S16 SUB HEATED OXYGEN SENSOR (BANK 1 SENSOR 2)
M 3 MAIN HEATED OXYGEN SENSOR(BANK 2 SENSOR 1)
M 2 MAIN HEATED OXYGEN SENSOR(BANK 1 SENSOR 1)
C 3 CRANKSHAFT POSITION SENSOR
D17 DATA LINK CONNECTOR 3
Rear side of intake manifold
Front side of intake manifold
Right kick panel
Left kick panel
(SHIELDED)

K OVERALL ELECTRICAL WIRING DIAGRAM

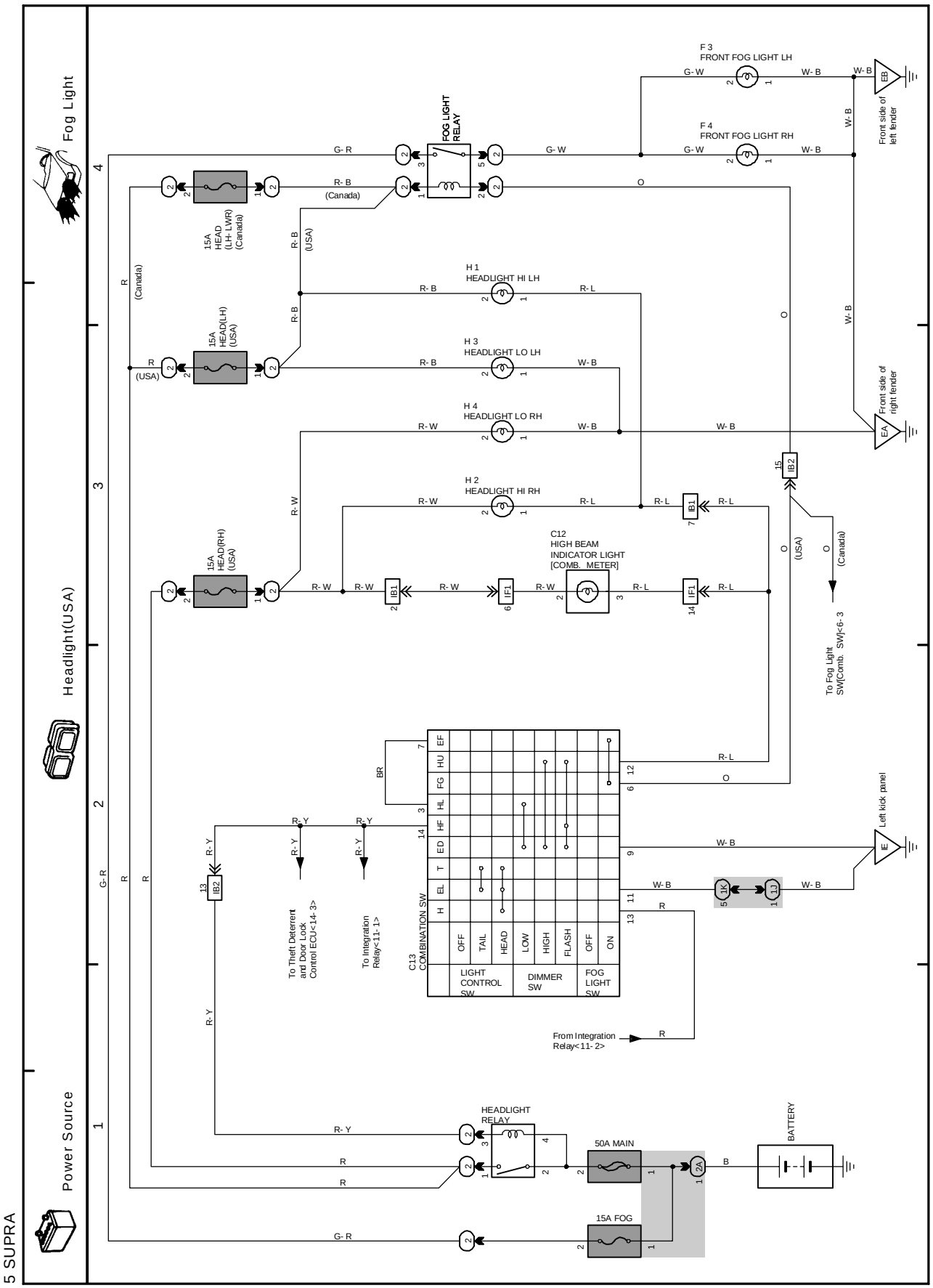

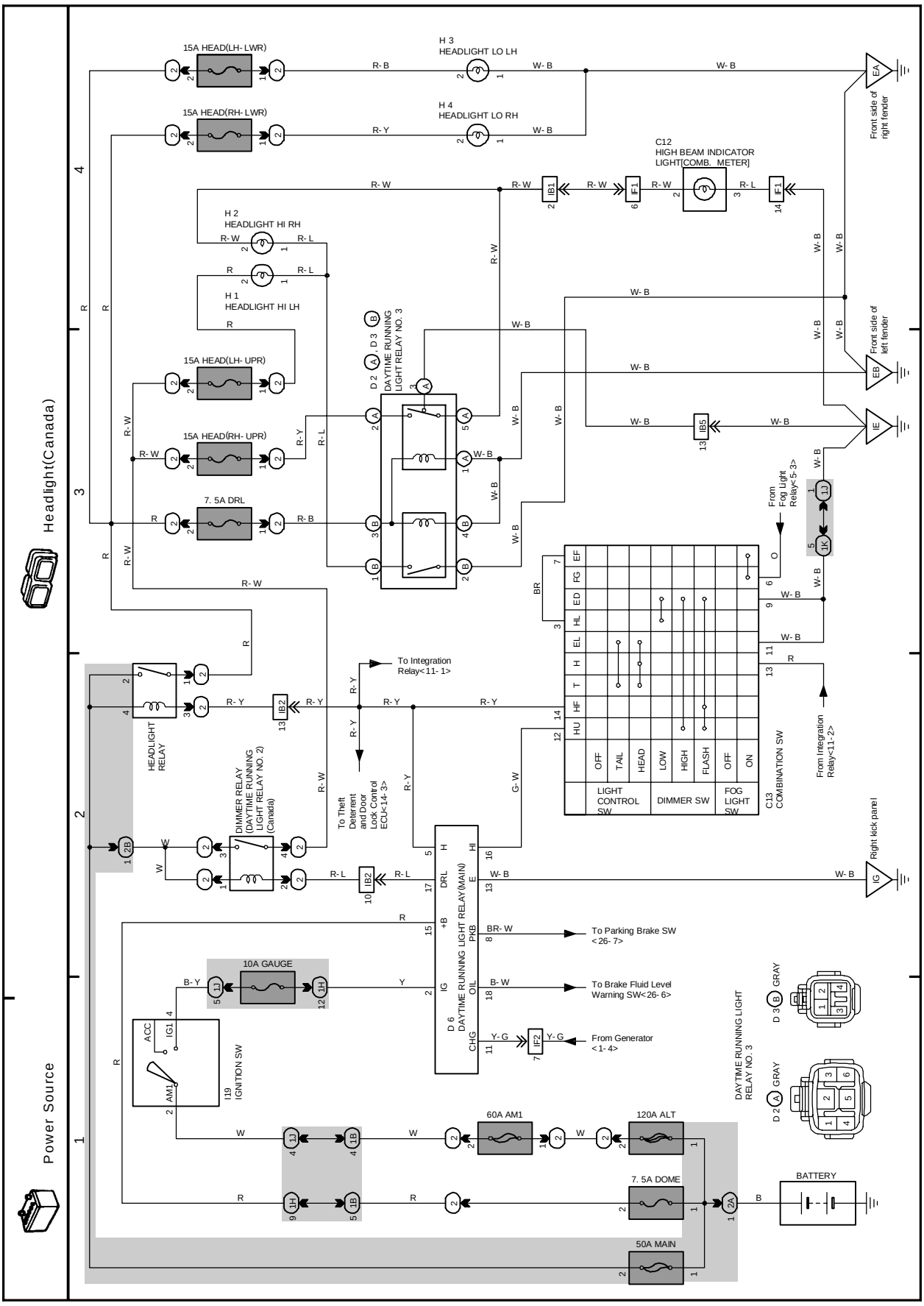
Headlight(Canada)
Power Source
15A HEAD(LH- LWR)
15A HEAD(RH- LWR)
15A HEAD(LH- UPR)
15A HEAD(RH- UPR)
7. 5A DRL
H 1
HEADLIGHT HI LH
H 2
HEADLIGHT HI RH
H 3
HEADLIGHT LO LH
H 4
HEADLIGHT LO RH
C12
HIGH BEAM INDICATOR LIGHT[COMB. METER]
D 2 D 3
DAYTIME RUNNING LIGHT RELAY NO. 3
HEADLIGHT RELAY
DIMMER RELAY (DAYTIME RUNNING LIGHT RELAY NO. 2) (Canada)
C13
COMBINATION SW
LIGHT CONTROL SW
DIMMER SW
FOG LIGHT SW
OFF
TAIL
HEAD
LOW
HIGH
FLASH
OFF
ON
From Fog Light Relay<5- 3>
From Integration Relay<11- 2>
To Integration Relay<11- 1>
To Theft Deterrent and Door Lock Control ECU<14- 3>
D 6
DAYTIME RUNNING LIGHT RELAY(MAIN)
To Parking Brake SW <26- 7>
To Brake Fluid Level Warning SW<26- 6>
From Generator <1- 4>
10A GAUGE
I19
IGNITION SW
ACC
IG1
AM1
60A AM1
120A ALT
7. 5A DOME
50A MAIN
BATTERY
DAYTIME RUNNING LIGHT RELAY NO. 3
D 3 GRAY
D 2 GRAY
Front side of right fender
Front side of left fender
Right kick panel

K OVERALL ELECTRICAL WIRING DIAGRAM

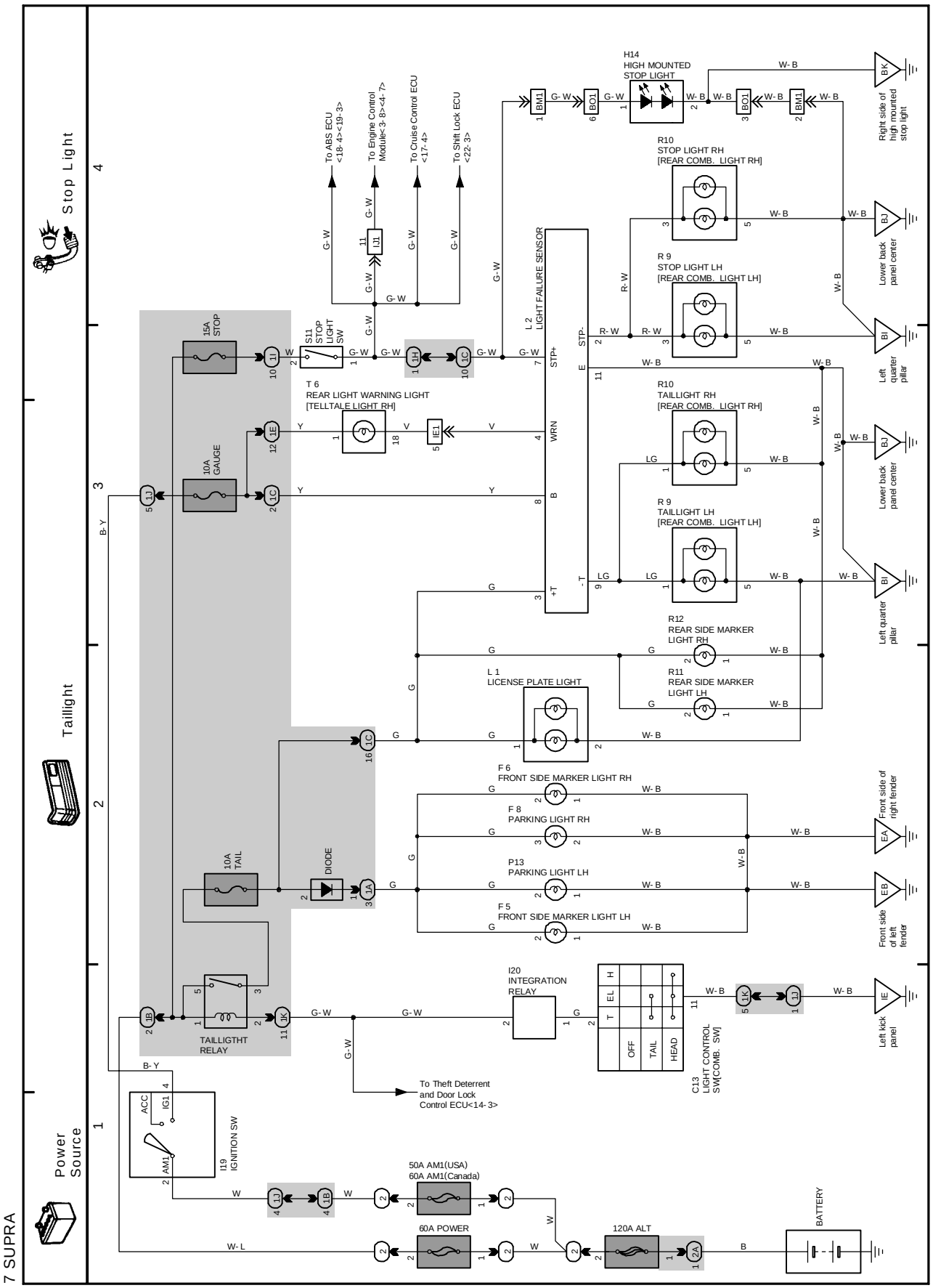

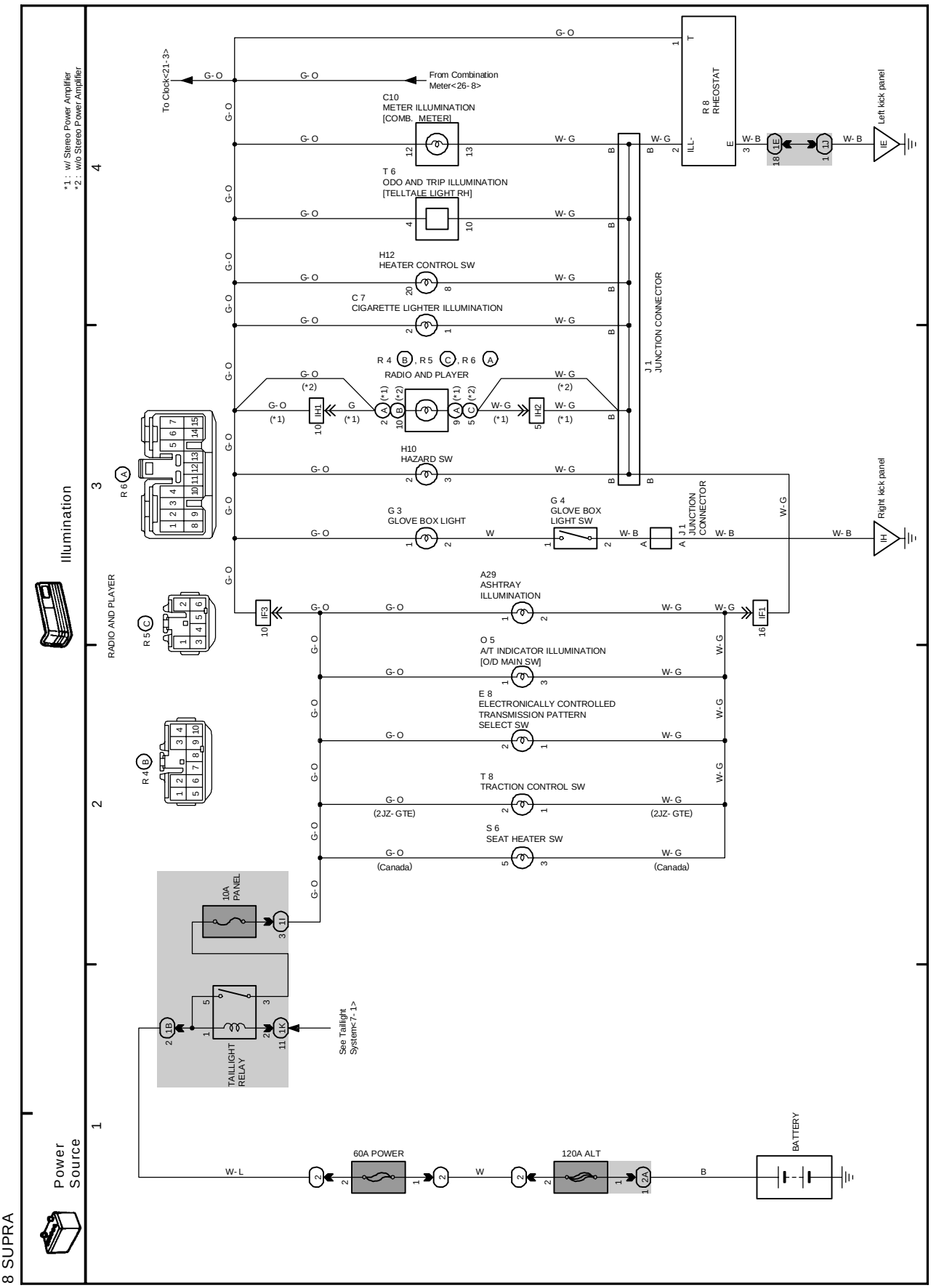
8 SUPRA
Power Source
Illumination
*1 : w/ Stereo Power Amplifier
*2 : w/o Stereo Power Amplifier
To Clock<21-3>
From Combination Meter<26-8>
C10 METER ILLUMINATION [COMB. METER]
T 6 ODO AND TRIP ILLUMINATION [TELLTALE LIGHT RH]
H12 HEATER CONTROL SW
C 7 CIGARETTE LIGHTER ILLUMINATION
R 4 , R 5 , R 6
RADIO AND PLAYER
H10 HAZARD SW
G 3 GLOVE BOX LIGHT
G 4 GLOVE BOX LIGHT SW
A29 ASHTRAY ILLUMINATION
O 5 A/T INDICATOR ILLUMINATION [O/D MAIN SW]
E 8 ELECTRONICALLY CONTROLLED TRANSMISSION PATTERN SELECT SW
T 8 TRACTION CONTROL SW
S 6 SEAT HEATER SW
R 8 RHEOSTAT
J 1 JUNCTION CONNECTOR
Left kick panel
Right kick panel
10A PANEL
TAILLIGHT RELAY
See Taillight System<7-1>
60A POWER
120A ALT
BATTERY
(2JZ- GTE)
(Canada)

K OVERALL ELECTRICAL WIRING DIAGRAM

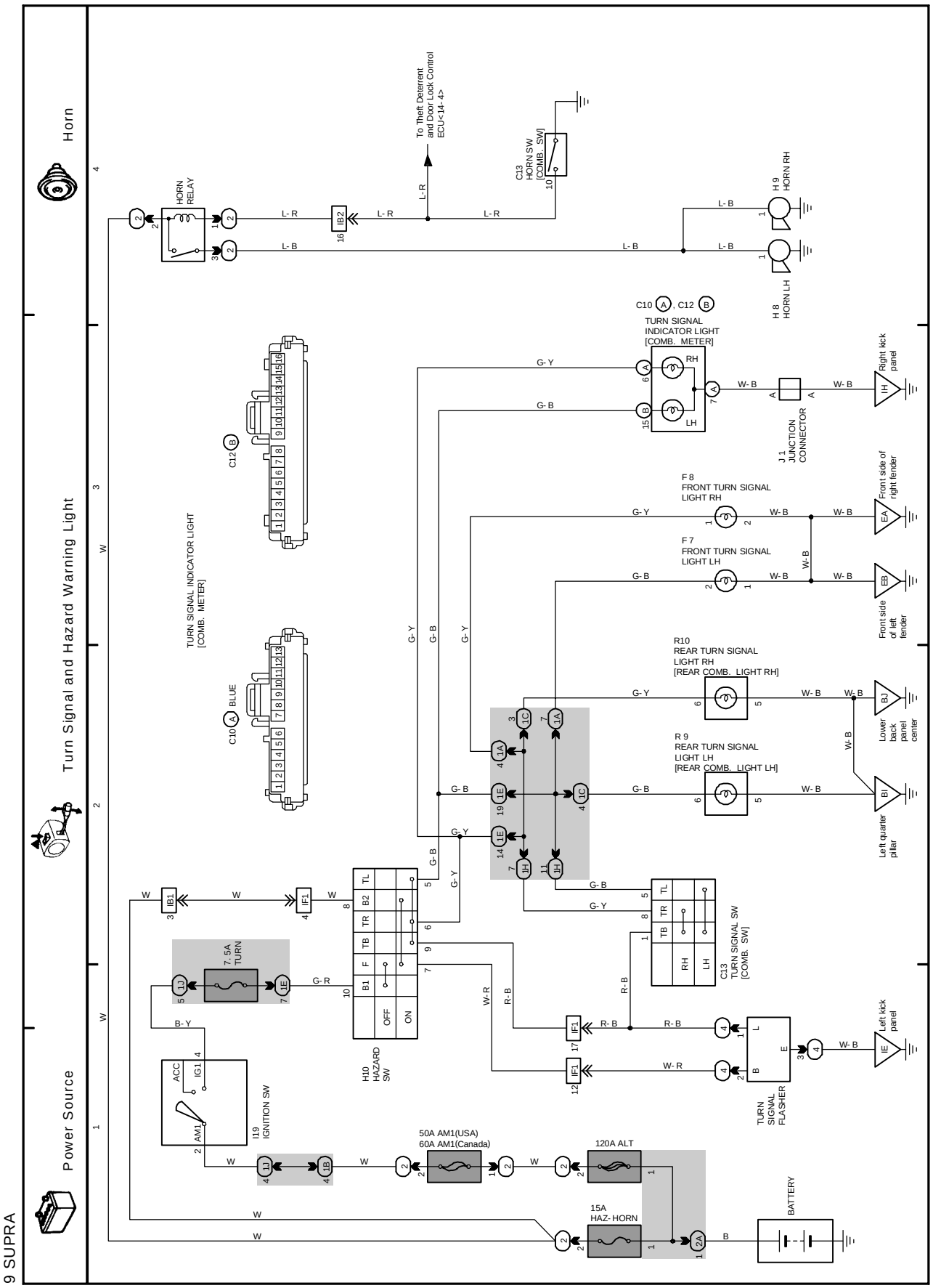

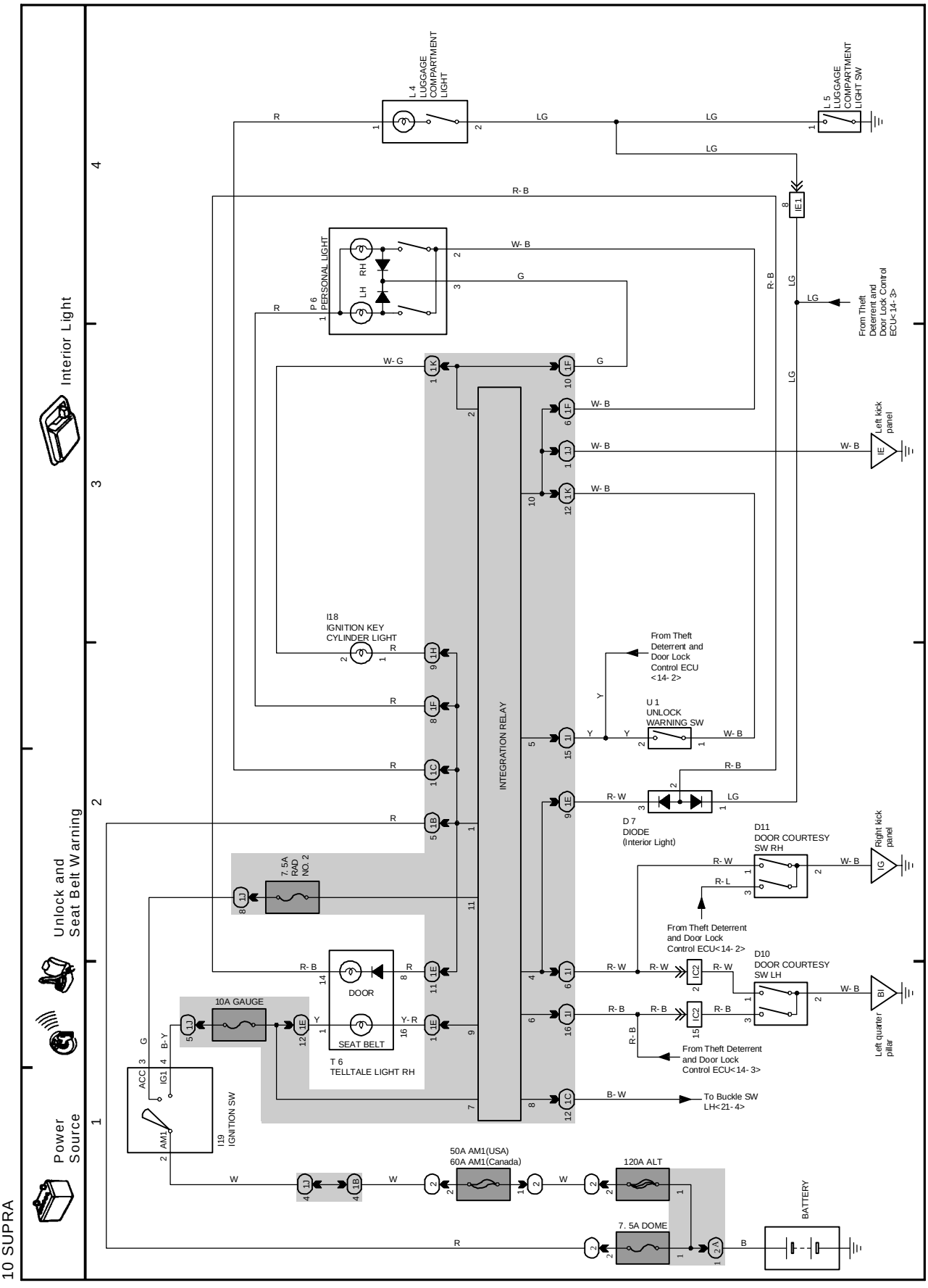
10 SUPRA
Power Source
Unlock and Seat Belt Warning
Interior Light
1
2
3
4
L 4 LUGGAGE COMPARTMENT LIGHT
L 5 LUGGAGE COMPARTMENT LIGHT SW
P 6 PERSONAL LIGHT
RH
LH
IE1
From Theft Deterrent and Door Lock Control ECU<14- 3>
Left kick panel
I18 IGNITION KEY CYLINDER LIGHT
From Theft Deterrent and Door Lock Control ECU <14- 2>
U 1 UNLOCK WARNING SW
INTEGRATION RELAY
D 7 DIODE (Interior Light)
D11 DOOR COURTESY SW RH
Right kick panel
From Theft Deterrent and Door Lock Control ECU<14- 2>
D10 DOOR COURTESY SW LH
Left quarter pillar
From Theft Deterrent and Door Lock Control ECU<14- 3>
7.5A RAD NO. 2
10A GAUGE
DOOR
SEAT BELT
T 6 TELLTALE LIGHT RH
To Buckle SW LH<21- 4>
I19 IGNITION SW
ACC
IG1
AM1
50A AM1(USA) 60A AM1(Canada)
120A ALT
7. 5A DOME
BATTERY

K OVERALL ELECTRICAL WIRING DIAGRAM

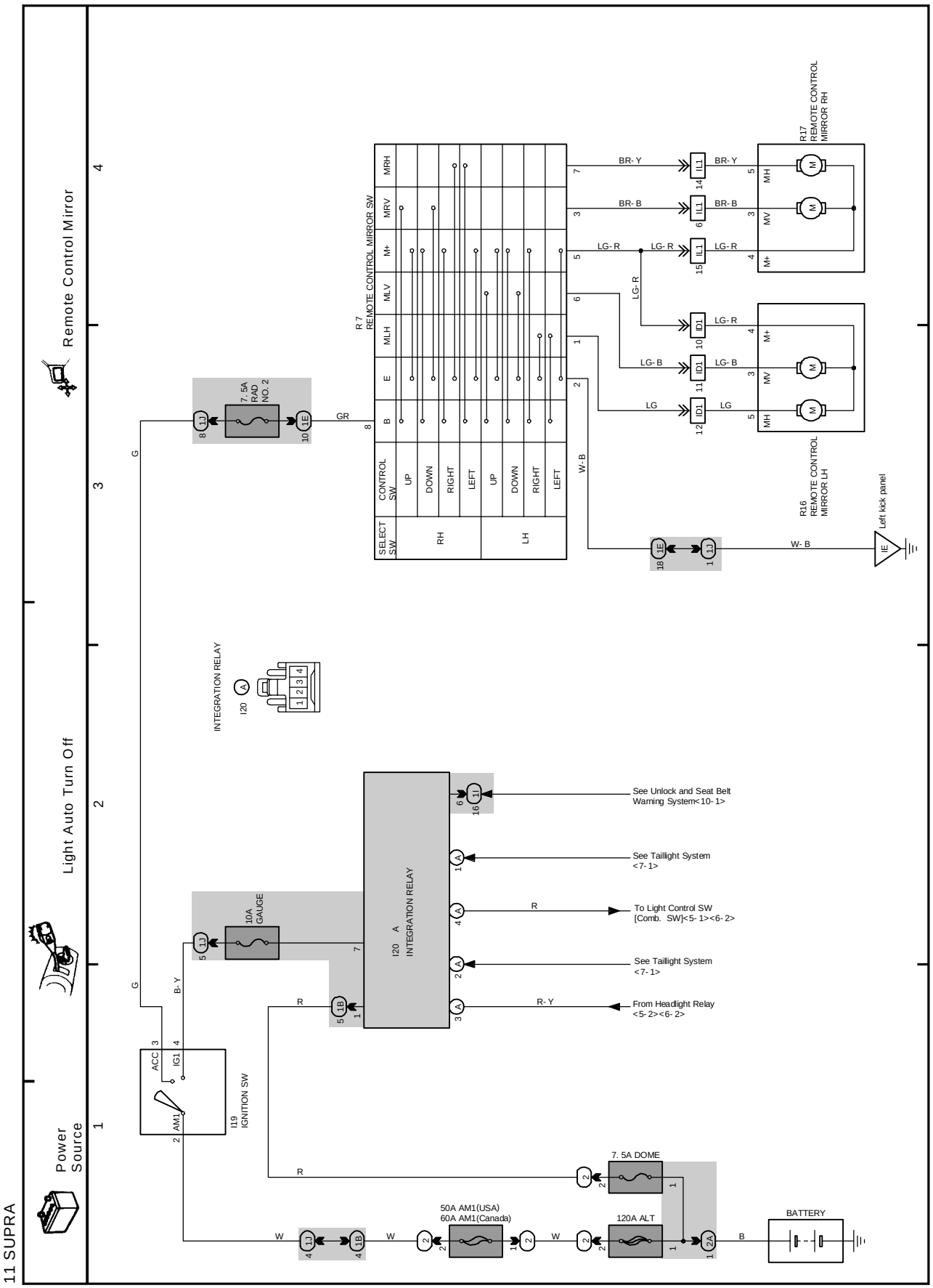

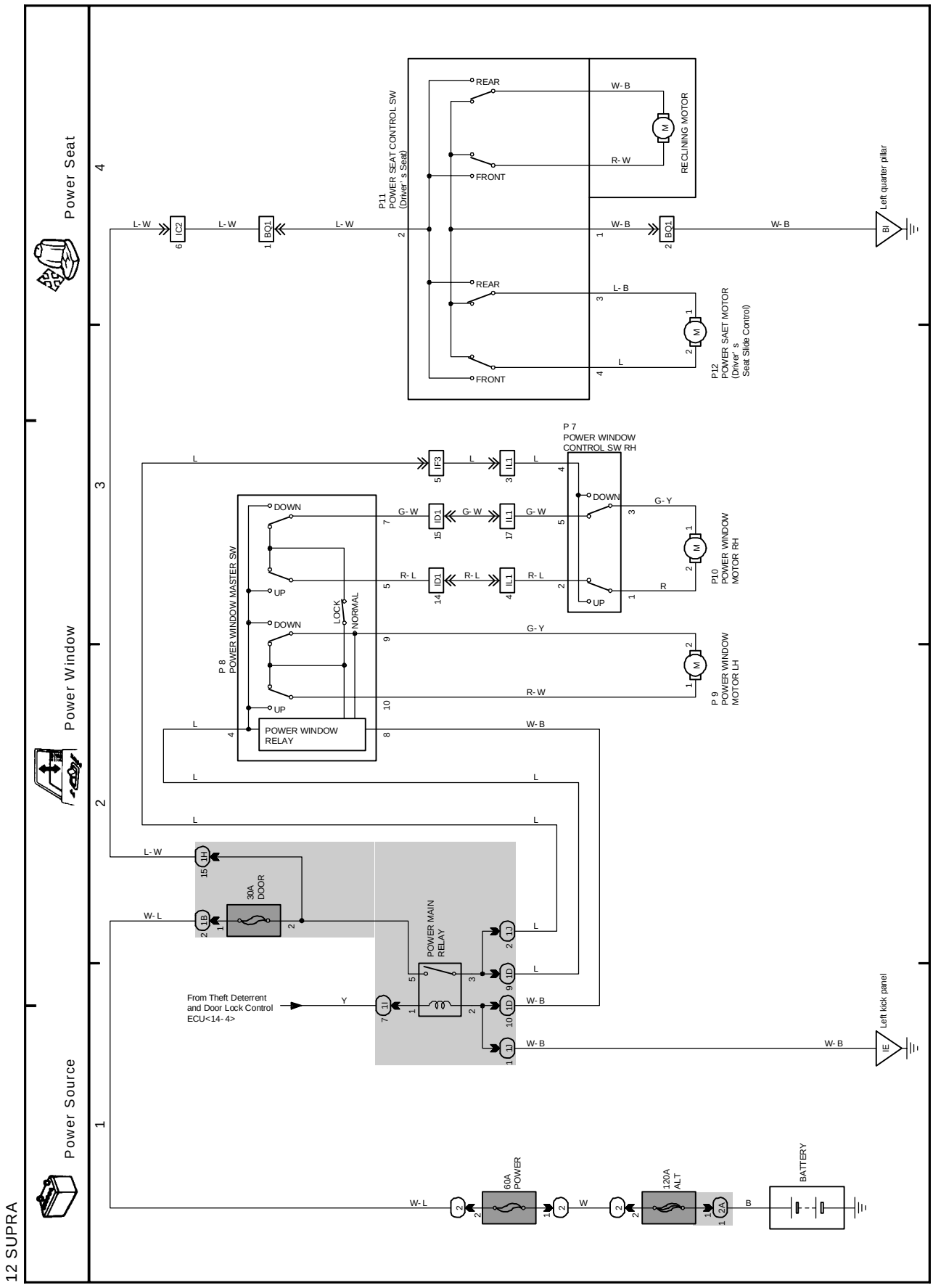
12 SUPRA
Power Source
Power Window
Power Seat
1
2
3
4
BATTERY
60A POWER
120A ALT
30A DOOR
POWER MAIN RELAY
POWER WINDOW RELAY
POWER WINDOW MASTER SW
P 8
P 7
POWER WINDOW CONTROL SW RH
P10 POWER WINDOW MOTOR RH
P 9 POWER WINDOW MOTOR LH
P11 POWER SEAT CONTROL SW (Driver's Seat)
P12 POWER SAET MOTOR (Driver's Seat Slide Control)
RECLINING MOTOR
Left quarter pillar
Left kick panel
From Theft Deterrent and Door Lock Control ECU<14-4>
DOWN
UP
LOCK
NORMAL
REAR
FRONT
L-W
W-L
W-B
R-W
G-W
G-Y
R-L
L-B
W
B
Y
L
R

K OVERALL ELECTRICAL WIRING DIAGRAM

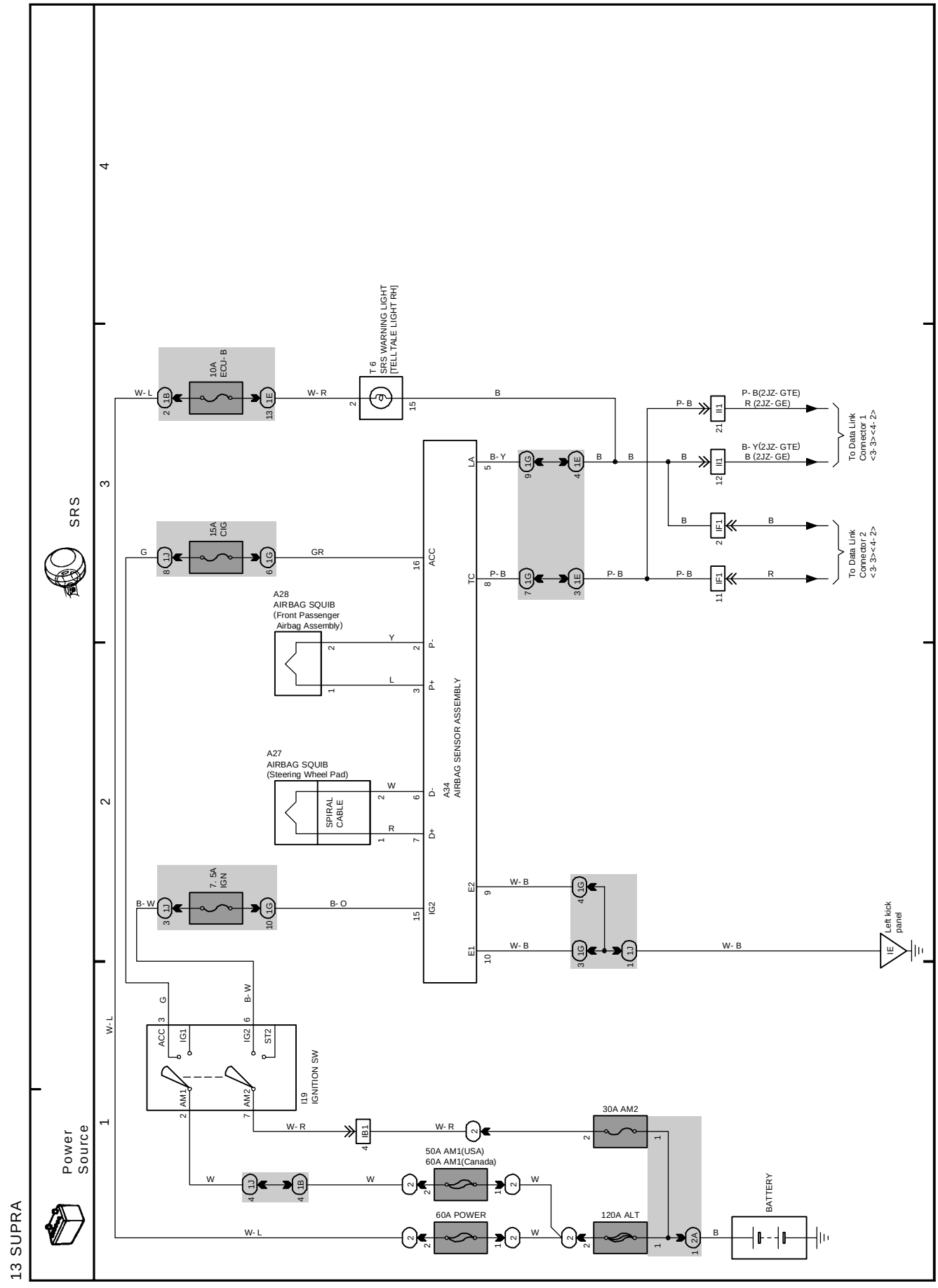

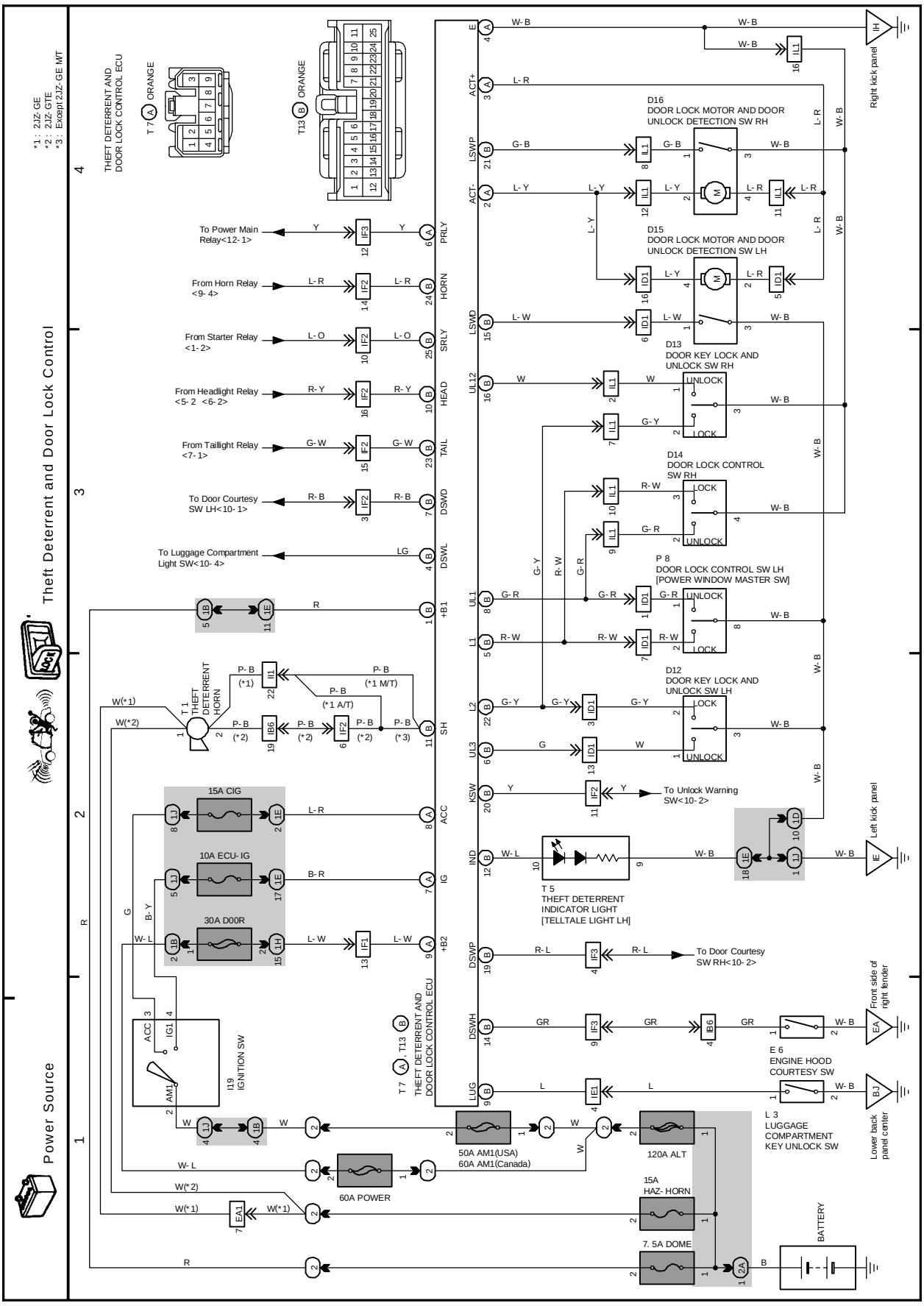
14 SUPRA
Power Source
Theft Deterrent and Door Lock Control
*1 : 2JZ GE
*2 : 2JZ GTE
*3 : Except 2JZ-GE M/T
THEFT DETERRENT AND DOOR LOCK CONTROL ECU
T 7 ORANGE
T13 ORANGE
To Power Main Relay<12- 1>
From Horn Relay <9- 4>
From Starter Relay <1- 2>
From Headlight Relay <5- 2 <6- 2>
From Taillight Relay <7- 1>
To Door Courtesy SW LH<10- 1>
To Luggage Compartment Light SW<10- 4>
PRLY
HORN
SRLY
HEAD
TAIL
DSWD
DSWL
+B1
SH
ACC
IG
+B2
D16
DOOR LOCK MOTOR AND DOOR UNLOCK DETECTION SW RH
D15
DOOR LOCK MOTOR AND DOOR UNLOCK DETECTION SW LH
D13
DOOR KEY LOCK AND UNLOCK SW RH
D14
DOOR LOCK CONTROL SW RH
P 8
DOOR LOCK CONTROL SW LH [POWER WINDOW MASTER SW]
D12
DOOR KEY LOCK AND UNLOCK SW LH
UNLOCK
LOCK
Right kick panel
Left kick panel
To Unlock Warning SW<10- 2>
To Door Courtesy SW RH<10- 2>
T 5
THEFT DETERRENT INDICATOR LIGHT [TELLTALE LIGHT LH]
T 1
THEFT DETERRENT HORN
15A CIG
10A ECU- IG
30A D00R
I19
IGNITION SW
60A POWER
50A AM1(USA)
60A AM1(Canada)
120A ALT
15A
HAZ- HORN
7. 5A DOME
BATTERY
E 6
ENGINE HOOD COURTESY SW
Front side of right fender
L 3
LUGGAGE COMPARTMENT KEY UNLOCK SW
Lower back panel center

K OVERALL ELECTRICAL WIRING DIAGRAM

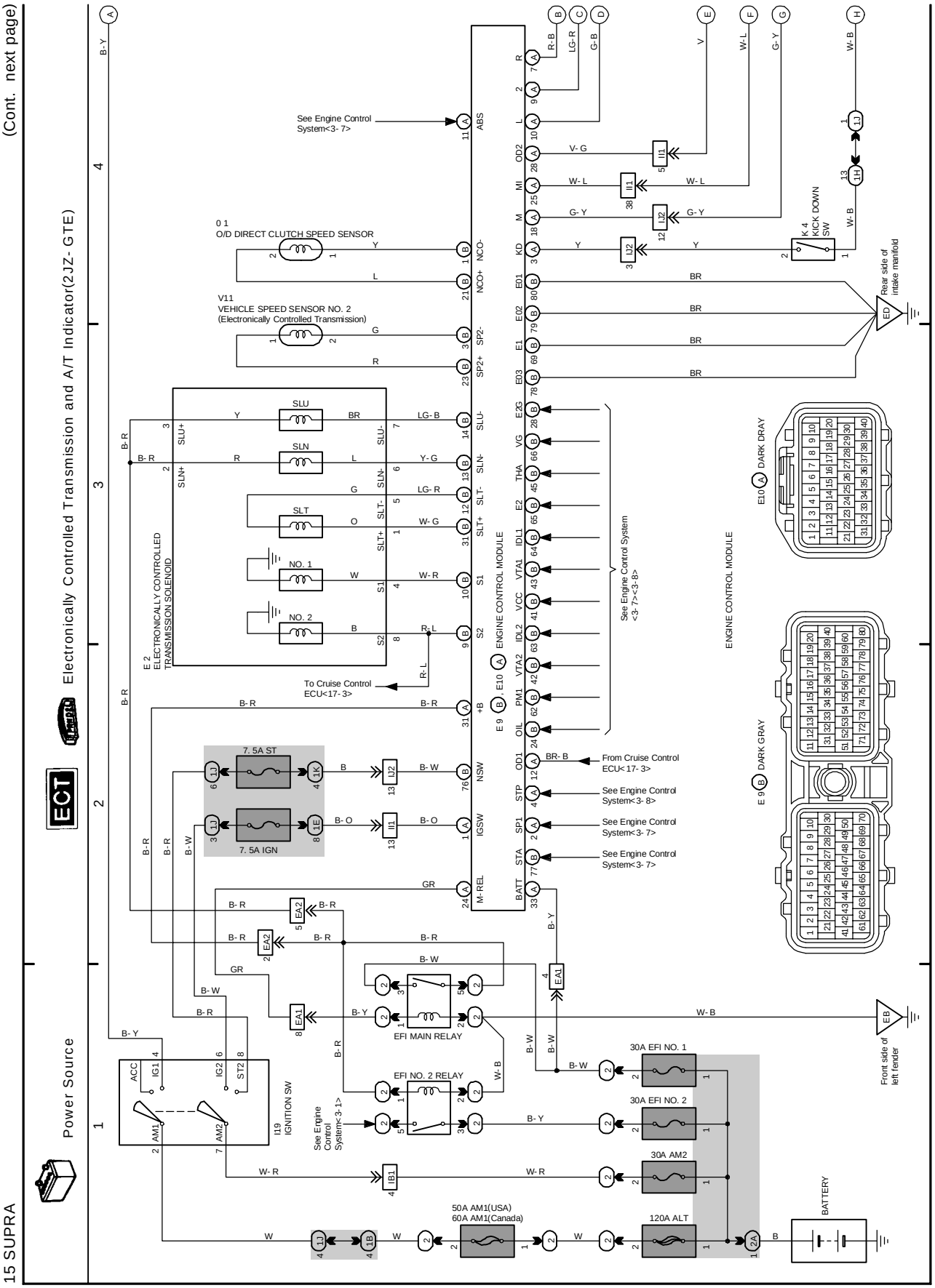

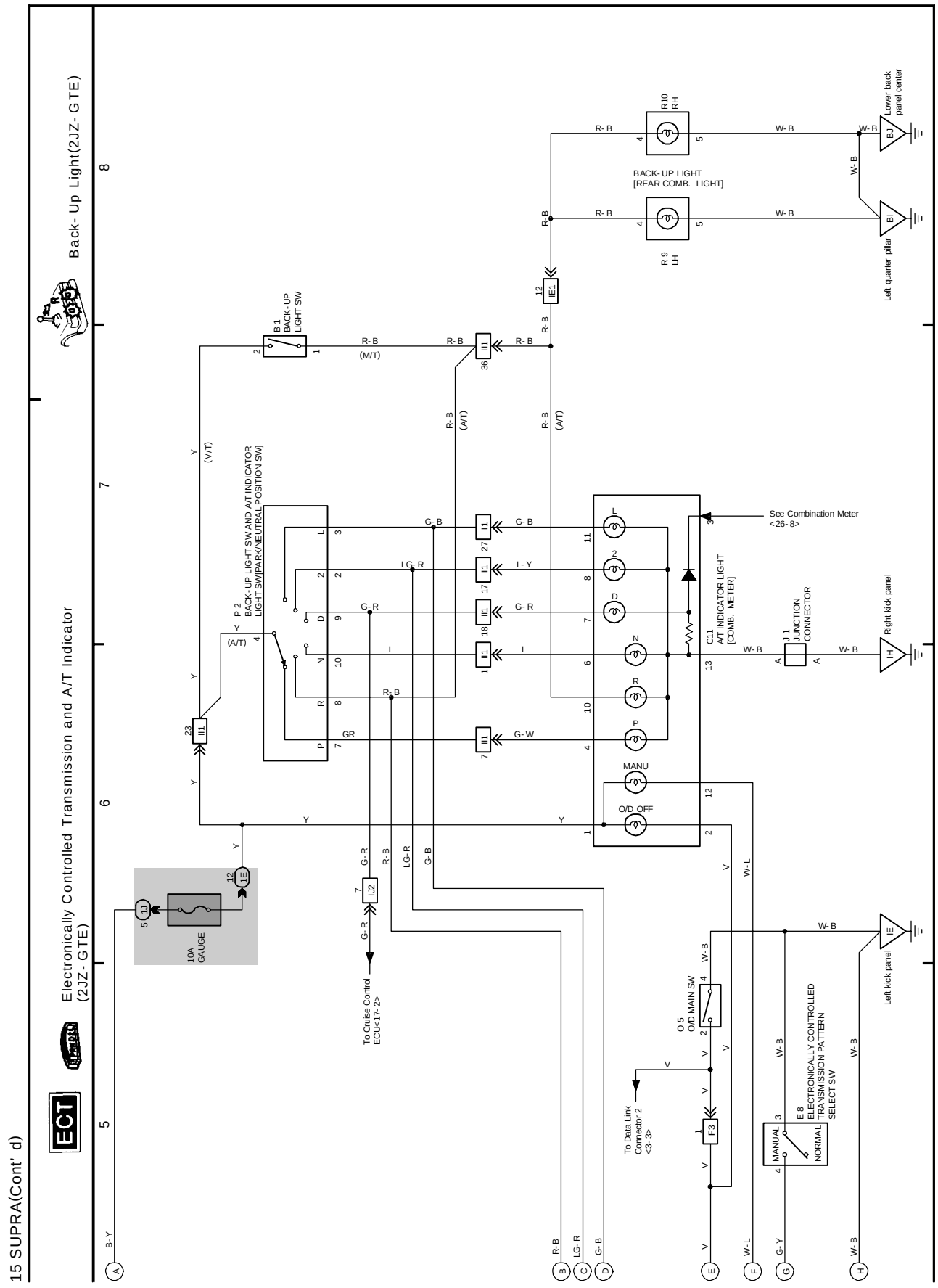
15 SUPRA(Cont' d)
ECT
Electronically Controlled Transmission and A/T Indicator (2JZ- GTE)
Back- Up Light(2JZ- GTE)
5
6
7
8
B 1 BACK- UP LIGHT SW
P 2 BACK- UP LIGHT SW AND A/T INDICATOR LIGHT SW[PARK/NEUTRAL POSITION SW]
BACK- UP LIGHT [REAR COMB. LIGHT]
R 9 LH
R10 RH
Lower back panel center
Left quarter pillar
Right kick panel
Left kick panel
J 1 JUNCTION CONNECTOR
C11 A/T INDICATOR LIGHT [COMB. METER]
See Combination Meter <26- 8>
MANU
O/D OFF
O 5 O/D MAIN SW
E 8 ELECTRONICALLY CONTROLLED TRANSMISSION PATTERN SELECT SW
MANUAL
NORMAL
10A GAUGE
To Cruise Control ECU<17- 2>
To Data Link Connector 2 <3- 3>
(M/T)
(A/T)
R- B
G- B
LG- R
L- Y
G- R
G- W
W- B
W- L
G- Y
B- Y
V
Y
L
2
D
N
R
P
MAIN
BJ
BI
IH
IE
IJ1
IJ2
IF3
IE1
II1

K OVERALL ELECTRICAL WIRING DIAGRAM

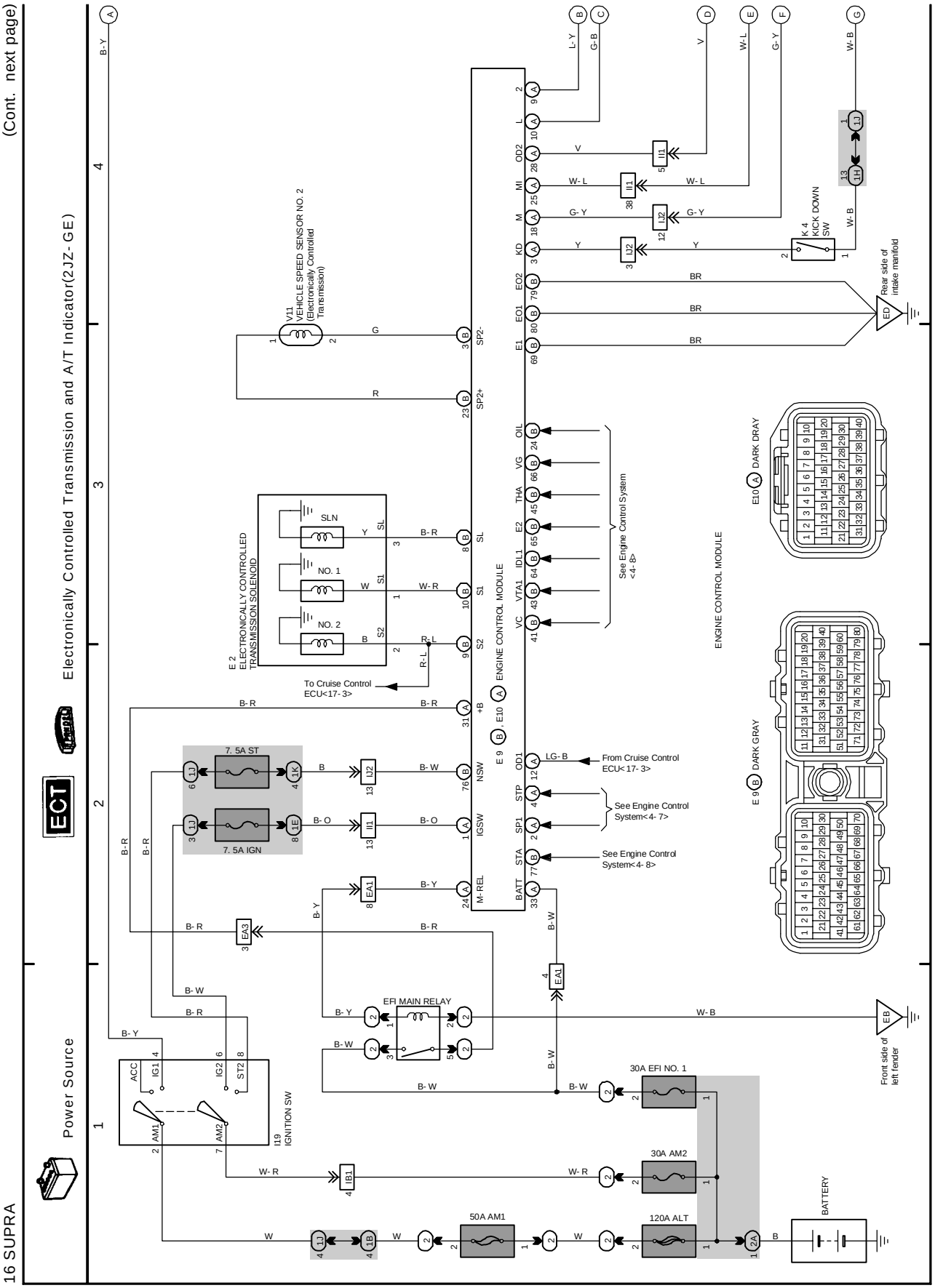

ECT

Electronically Controlled Transmission and A/T Indicator (2JZ- GE)

Back- Up Light(2JZ- GE)

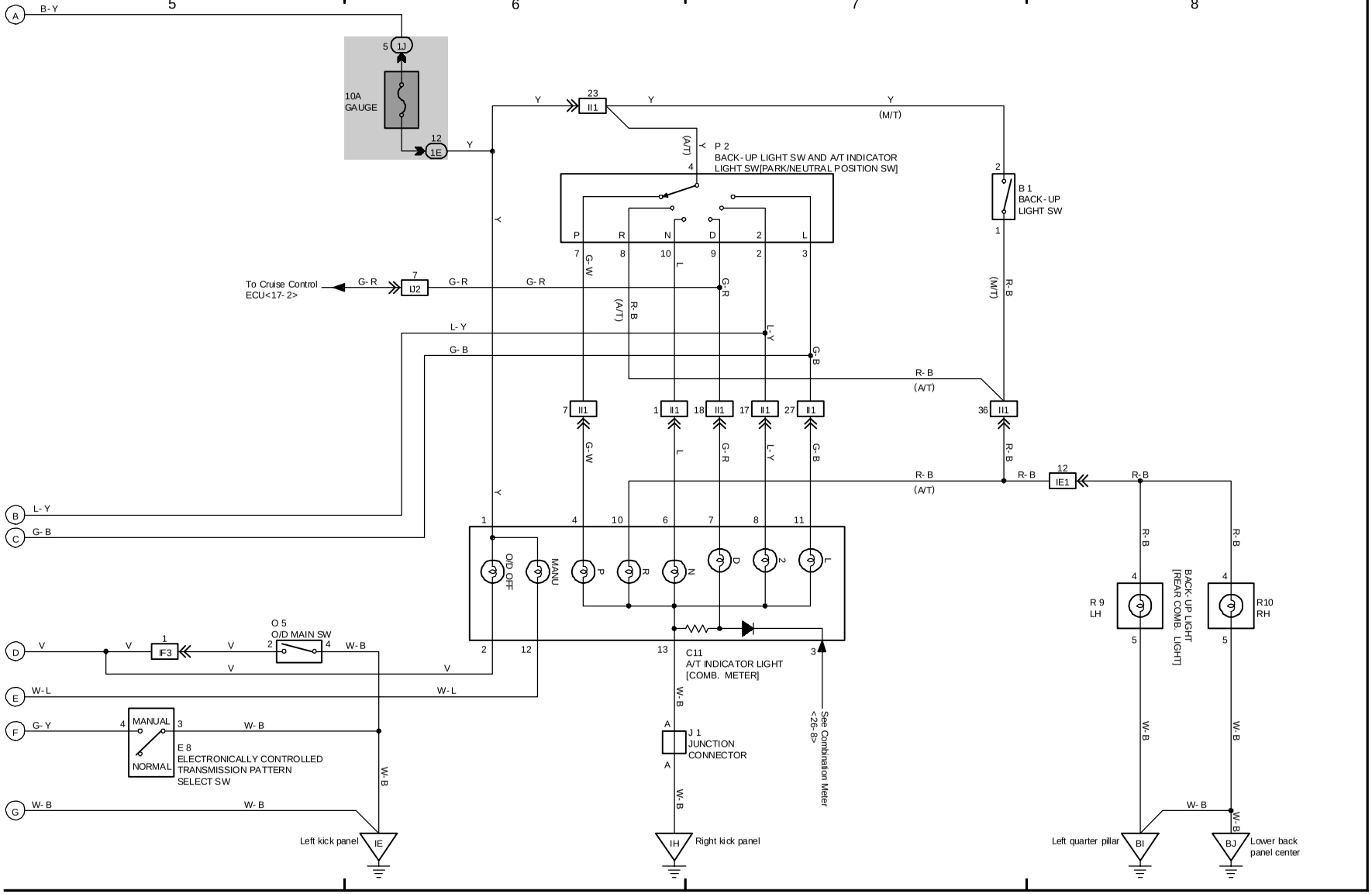

K

K OVERALL ELECTRICAL WIRING DIAGRAM

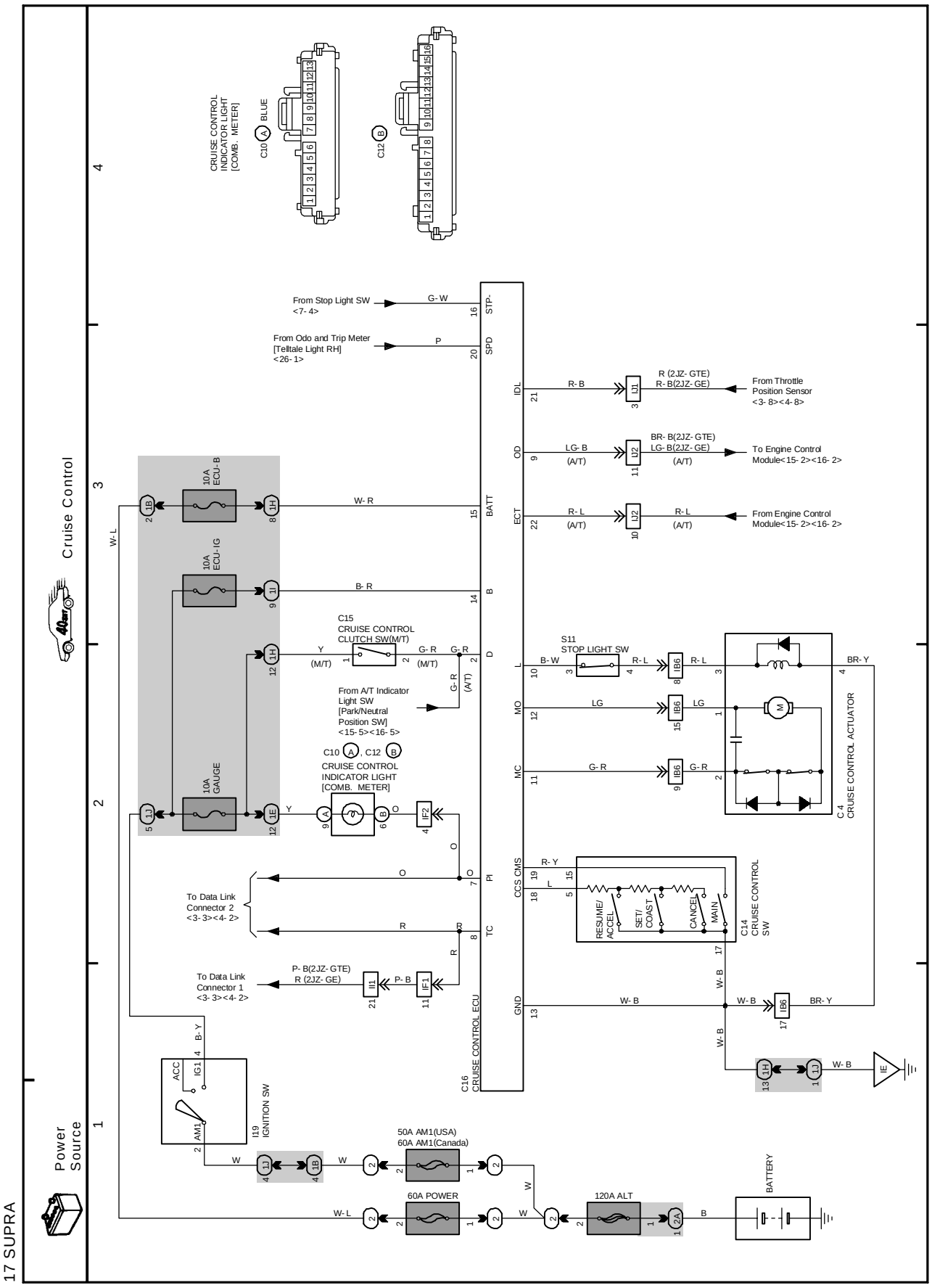

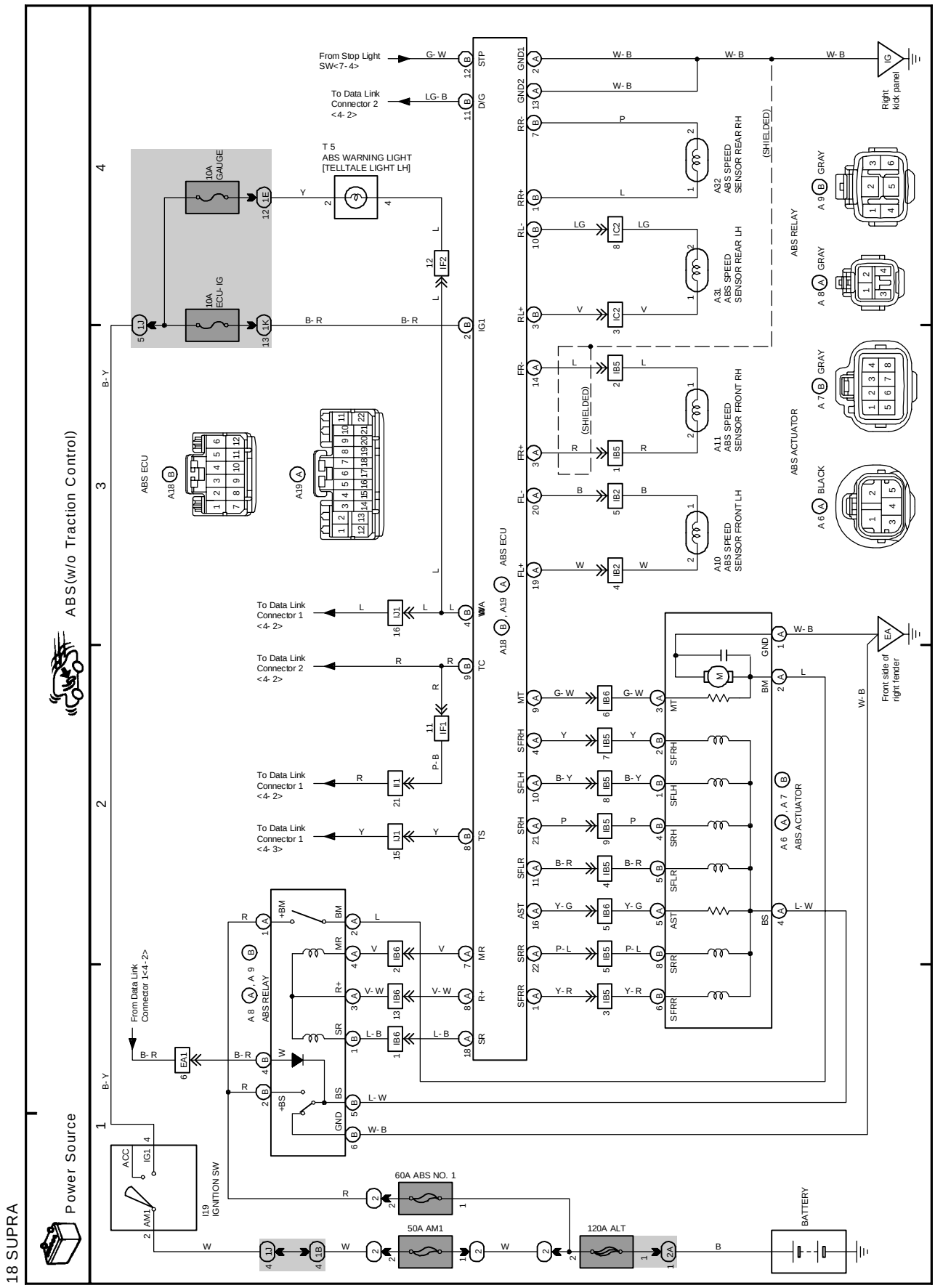
18 SUPRA
Power Source
ABS(w/o Traction Control)
ACC
IG1
AM1
I19
IGNITION SW
60A ABS NO. 1
50A AM1
120A ALT
BATTERY
10A GAUGE
10A ECU-IG
T 5
ABS WARNING LIGHT
[TELLTALE LIGHT LH]
From Stop Light SW<7-4>
To Data Link Connector 2 <4-2>
To Data Link Connector 1 <4-2>
To Data Link Connector 1 <4-3>
From Data Link Connector 1<4-2>
ABS ECU
ABS RELAY
ABS ACTUATOR
A10 ABS SPEED SENSOR FRONT LH
A11 ABS SPEED SENSOR FRONT RH
A31 ABS SPEED SENSOR REAR LH
A32 ABS SPEED SENSOR REAR RH
(SHIELDED)
Right kick panel
Front side of right fender
GRAY
BLACK

K OVERALL ELECTRICAL WIRING DIAGRAM

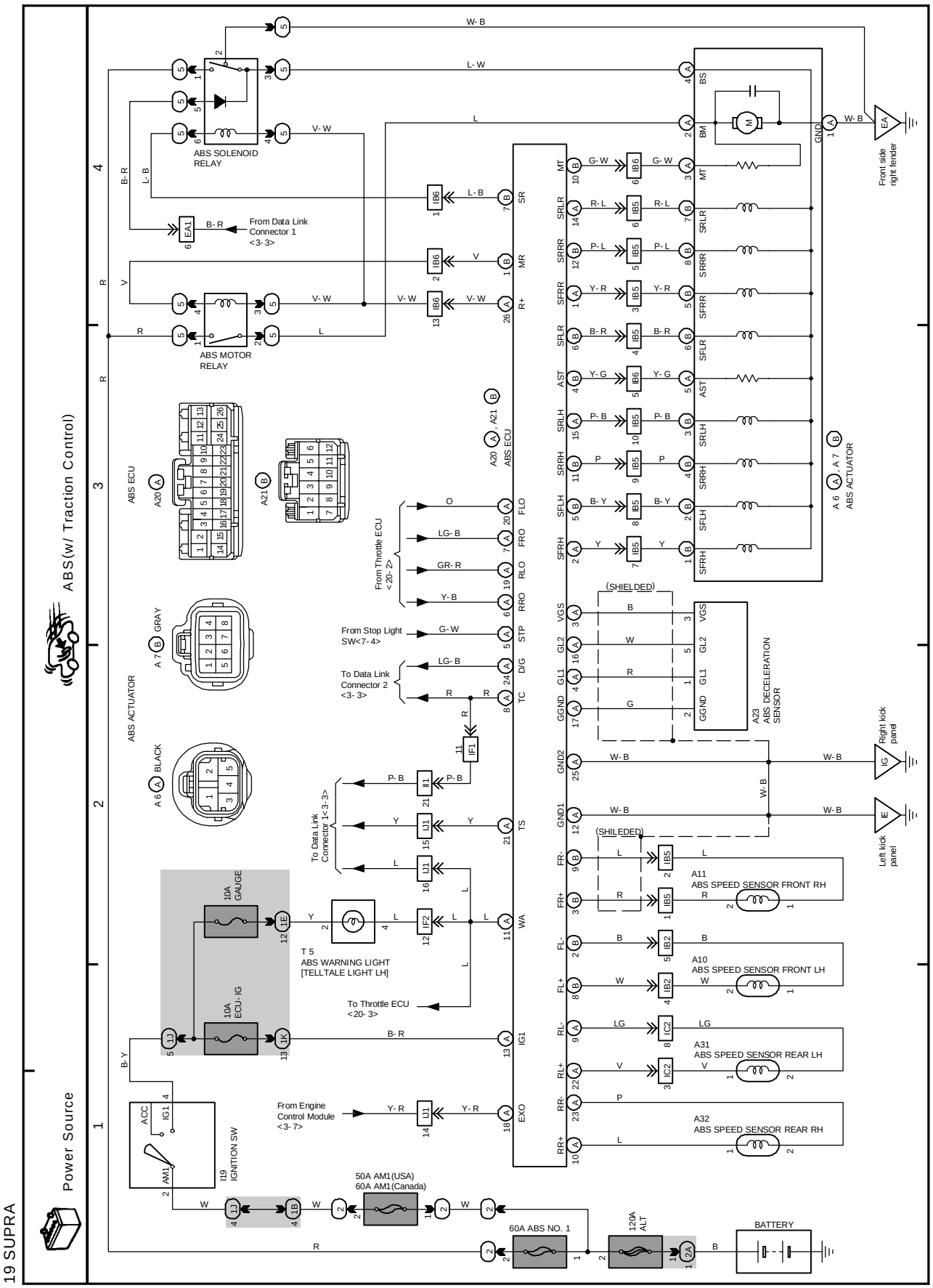

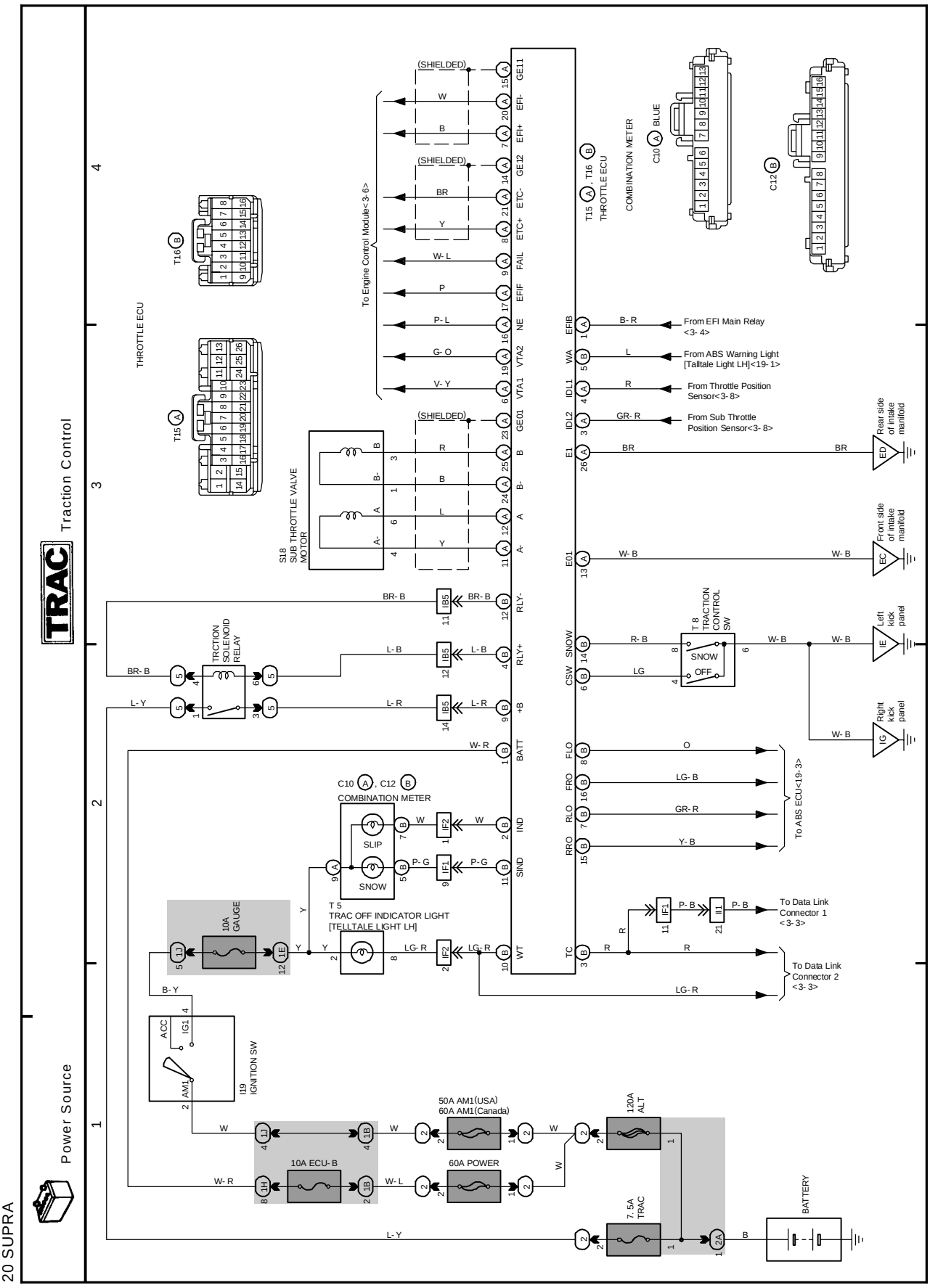
20 SUPRA
Power Source
TRAC
Traction Control
1
2
3
4
THROTTLE ECU
T16 B
T15 A
To Engine Control Module<3-6>
(SHIELDED)
W
B
BR
Y
W-L
P
P-L
G-O
V-Y
GE11
EFI-
EFI+
GE12
ETC-
ETC+
FAIL
EFIF
NE
VTA2
VTA1
GE01
B
B-
A
A-
S18
SUB THROTTLE VALVE MOTOR
T15 A, T16 B
THROTTLE ECU
COMBINATION METER
C10 A BLUE
C12 B
EFIB
WA
IDL1
IDL2
E1
E01
SNOW
CSW
BATT
+B
RLY+
RLY-
IND
SIND
WT
TC
FLO
FRO
RLO
RRO
From EFI Main Relay <3-4>
From ABS Warning Light [Talltale Light LH]<19-1>
From Throttle Position Sensor<3-8>
From Sub Throttle Position Sensor<3-8>
Rear side of intake manifold
Front side of intake manifold
Left kick panel
Right kick panel
T 8
TRACTION CONTROL SW
SNOW
OFF
TRCTION SOLENOID RELAY
To ABS ECU<19-3>
C10 A, C12 B
COMBINATION METER
SLIP
SNOW
T 5
TRAC OFF INDICATOR LIGHT [TELLTALE LIGHT LH]
10A GAUGE
To Data Link Connector 1 <3-3>
To Data Link Connector 2 <3-3>
ACC
IG1
AM1
I19
IGNITION SW
50A AM1(USA)
60A AM1(Canada)
120A ALT
10A ECU-B
60A POWER
7.5A TRAC
BATTERY

K OVERALL ELECTRICAL WIRING DIAGRAM

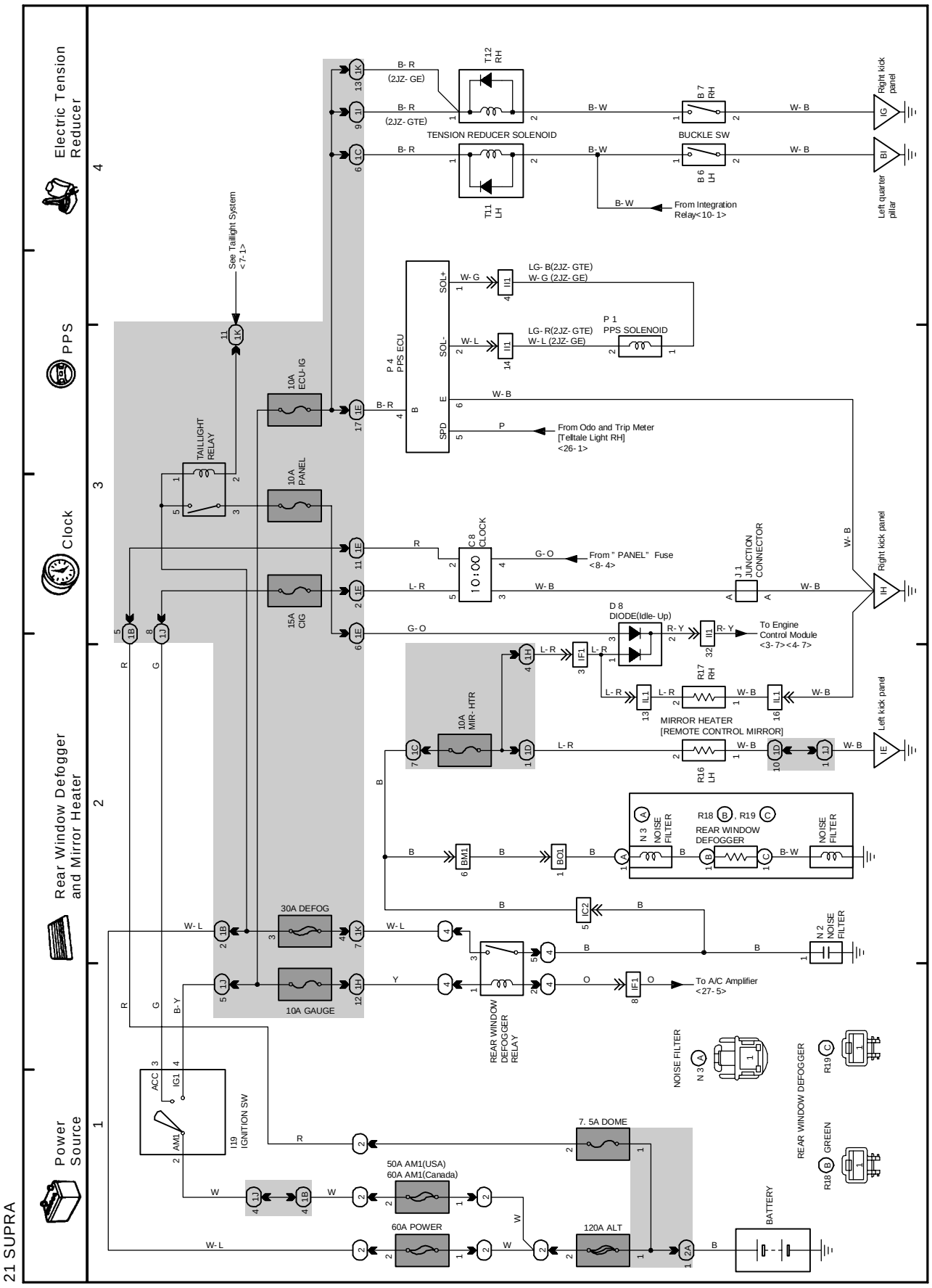

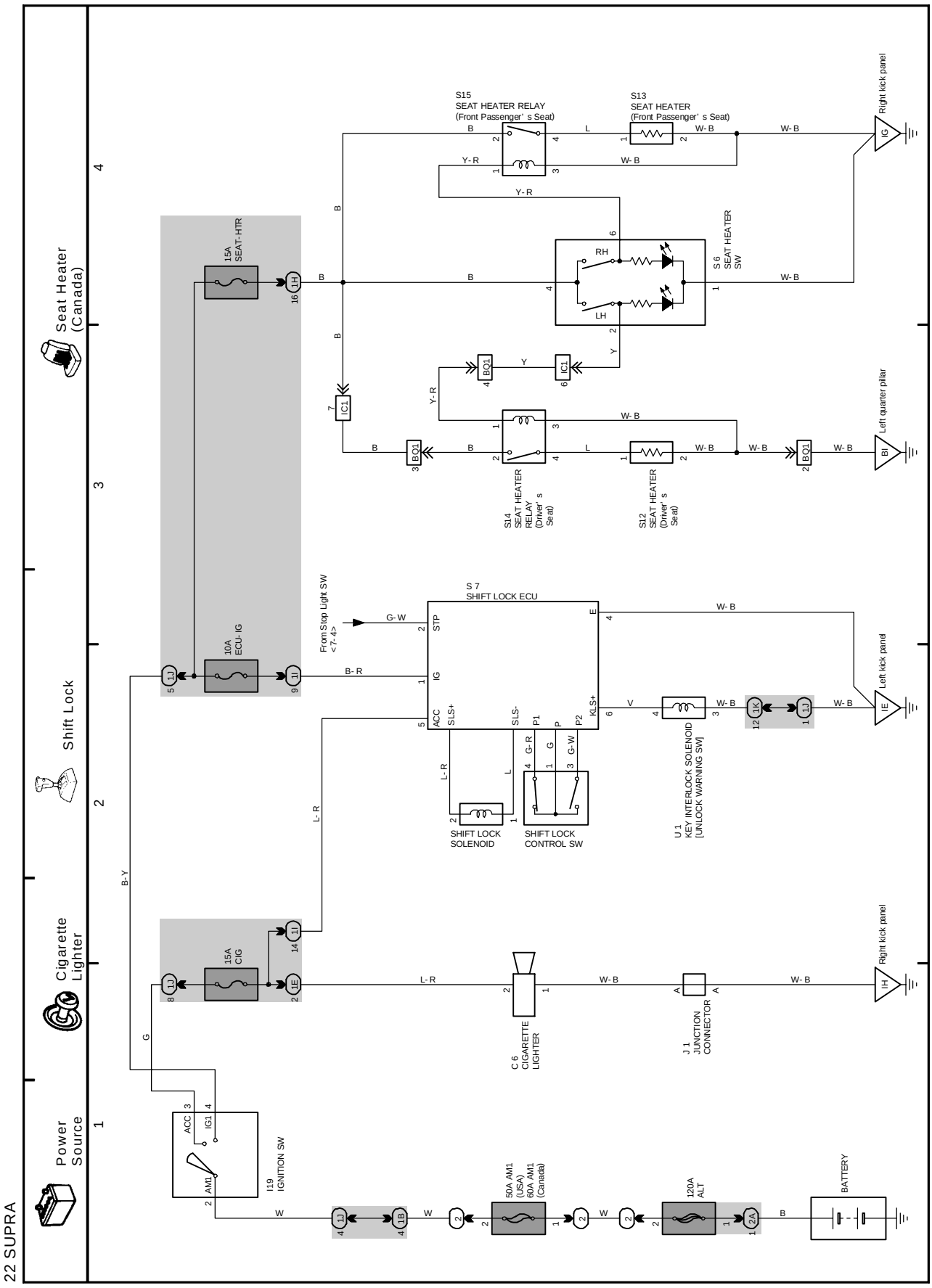
22 SUPRA
Power Source
Cigarette Lighter
Shift Lock
Seat Heater (Canada)
1
2
3
4
BATTERY
120A ALT
50A AM1 (USA) 60A AM1 (Canada)
I19 IGNITION SW
ACC
IG1
AM1
15A CIG
C 6 CIGARETTE LIGHTER
J 1 JUNCTION CONNECTOR
Right kick panel
10A ECU-IG
15A SEAT-HTR
S 7 SHIFT LOCK ECU
From Stop Light SW <7-4>
STP
IG
ACC
SLS+
SLS-
P1
P
P2
KLS+
SHIFT LOCK SOLENOID
SHIFT LOCK CONTROL SW
U 1 KEY INTERLOCK SOLENOID [UNLOCK WARNING SW]
Left kick panel
S15 SEAT HEATER RELAY (Front Passenger' s Seat)
S13 SEAT HEATER (Front Passenger' s Seat)
S 6 SEAT HEATER SW
RH
LH
S14 SEAT HEATER RELAY (Driver' s Seat)
S12 SEAT HEATER (Driver' s Seat)
Left quarter pillar

K OVERALL ELECTRICAL WIRING DIAGRAM

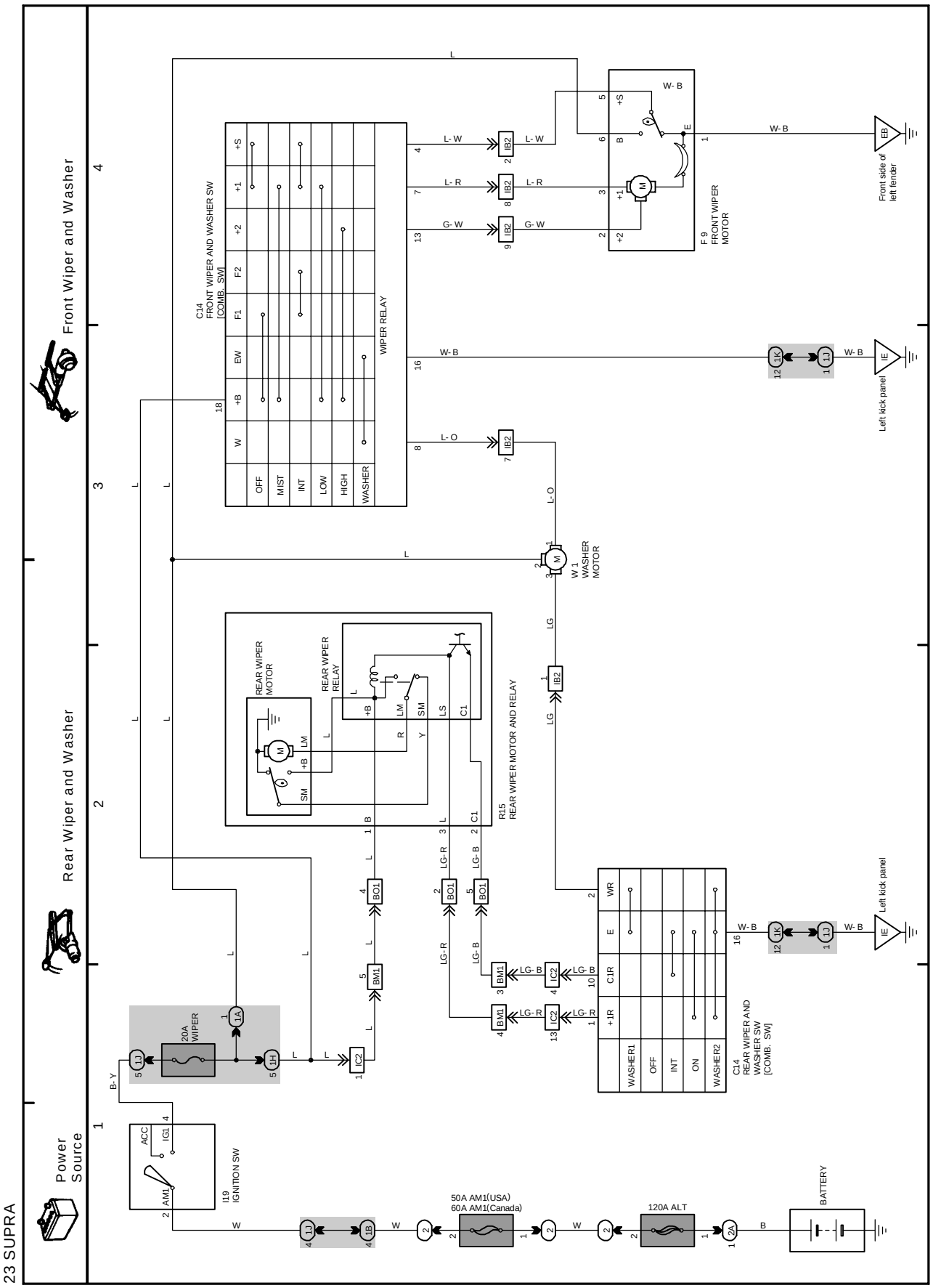

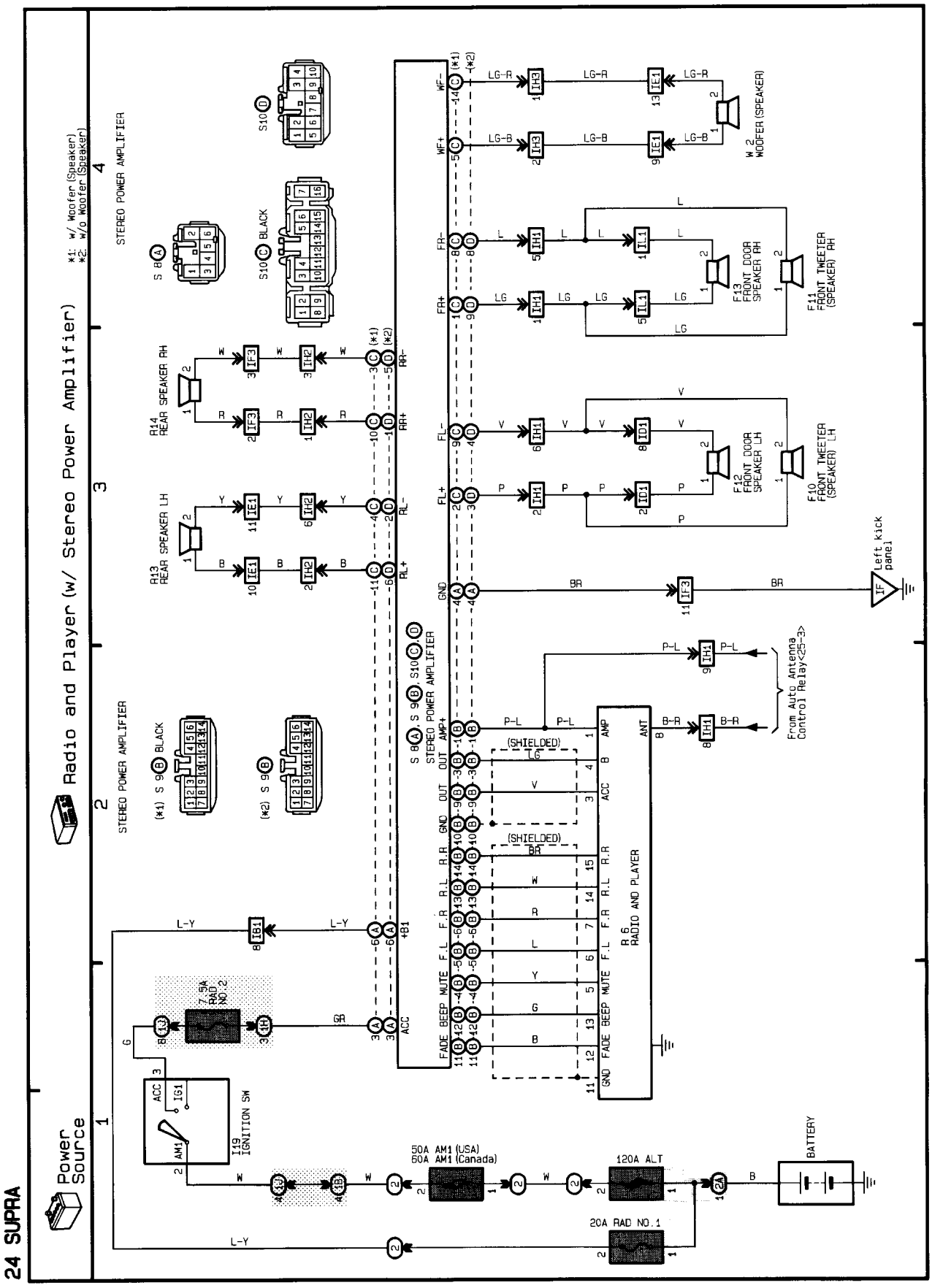
24 SUPRA
Radio and Player (w/ Stereo Power Amplifier)
Power Source
*1: w/ Woofer (Speaker)
*2: w/o Woofer (Speaker)
STEREO POWER AMPLIFIER
R 6
RADIO AND PLAYER
I19
IGNITION SW
7.5A RAD NO.2
50A AM1 (USA)
50A AM1 (Canada)
120A ALT
20A RAD NO.1
BATTERY
R13
REAR SPEAKER LH
R14
REAR SPEAKER RH
F10
FRONT TWEETER (SPEAKER) LH
F11
FRONT TWEETER (SPEAKER) RH
F12
FRONT DOOR SPEAKER LH
F13
FRONT DOOR SPEAKER RH
W-2
WOOFER (SPEAKER)
Left kick panel
From Auto Antenna Control Relay<2S-3>
(SHIELDED)

K OVERALL ELECTRICAL WIRING DIAGRAM

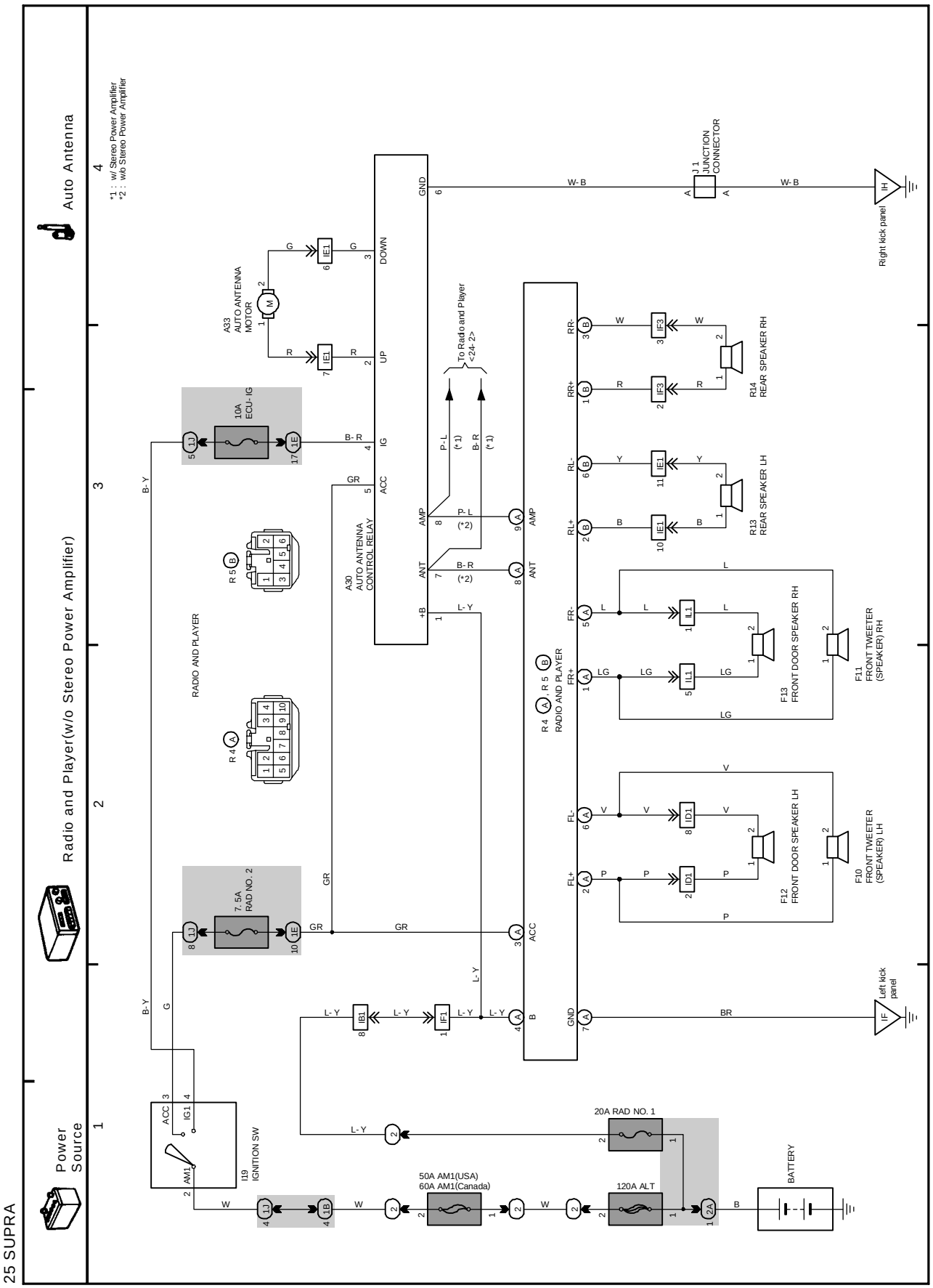

K OVERALL ELECTRICAL WIRING DIAGRAM

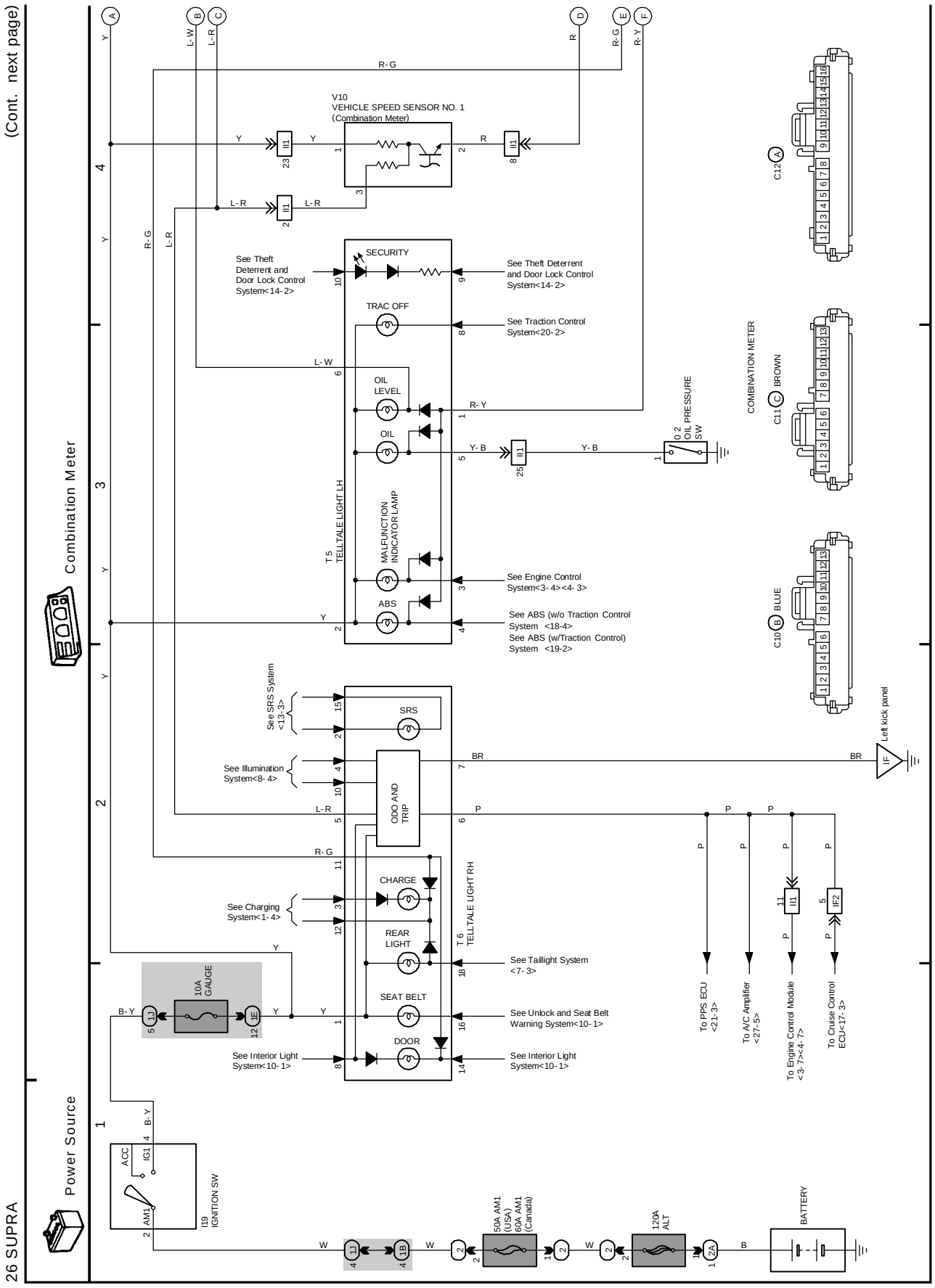

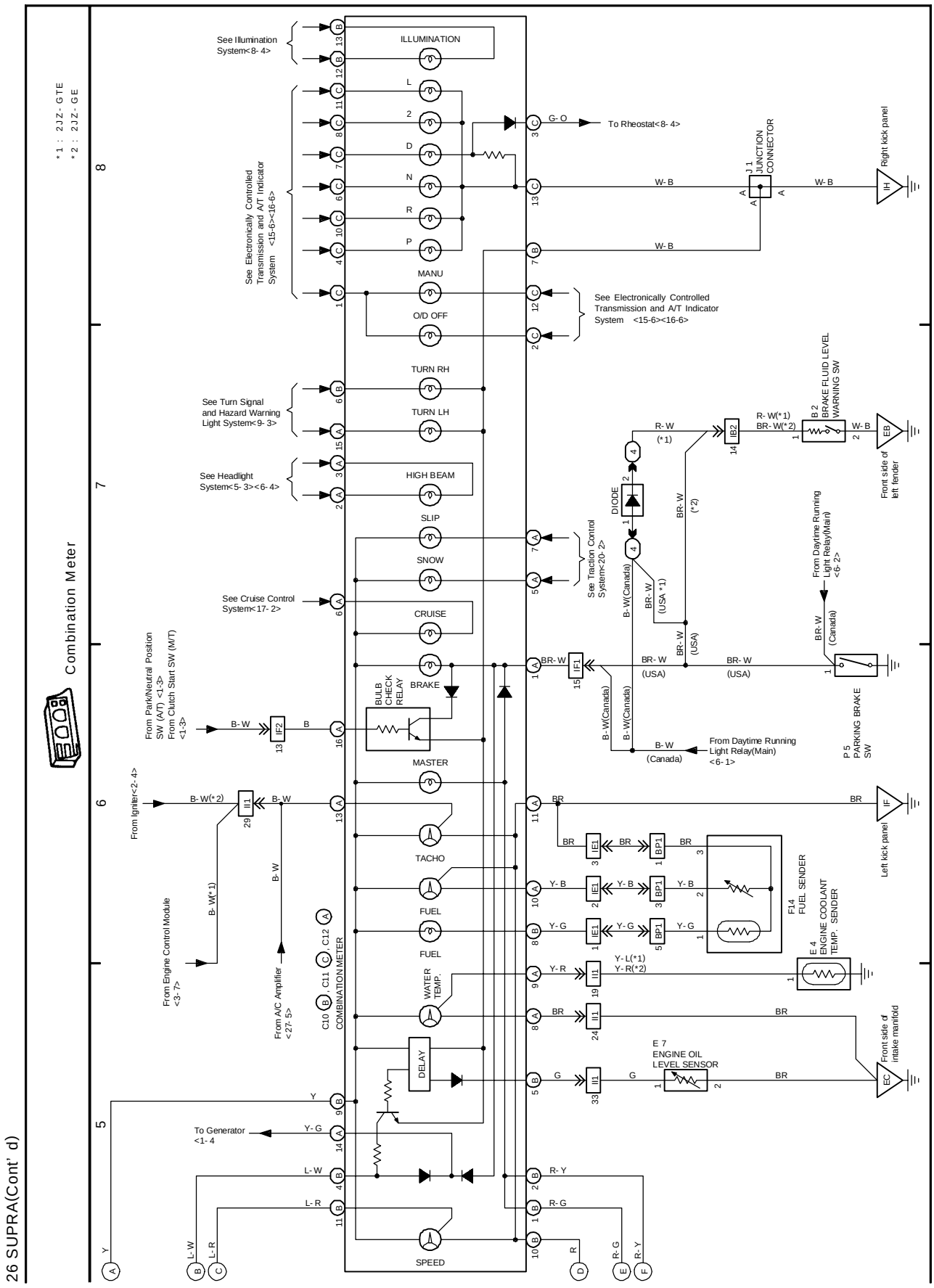
26 SUPRA(Cont' d)
Combination Meter
*1 : 2JZ-GTE
*2 : 2JZ-GE
ILLUMINATION
See Illumination System<8-4>
See Electronically Controlled Transmission and A/T Indicator System <15-6><16-6>
MANU
O/D OFF
See Electronically Controlled Transmission and A/T Indicator System <15-6><16-6>
TURN RH
TURN LH
See Turn Signal and Hazard Warning Light System<9-3>
HIGH BEAM
See Headlight System<5-3><6-4>
SLIP
SNOW
See Traction Control System<20-2>
CRUISE
See Cruise Control System<17-2>
BRAKE
From Park/Neutral Position SW (A/T) <1-3>
From Clutch Start SW (M/T) <1-3>
BULB CHECK RELAY
MASTER
TACHO
FUEL
FUEL
WATER TEMP.
DELAY
SPEED
From Igniter<2-4>
From Engine Control Module <3-7>
From A/C Amplifier <27-5>
COMBINATION METER
To Generator <1-4
To Rheostat<8-4>
J1 JUNCTION CONNECTOR
Right kick panel
DIODE
From Daytime Running Light Relay(Main) <6-2>
From Daytime Running Light Relay(Main) <6-1>
B2 BRAKE FLUID LEVEL WARNING SW
Front side of left fender
P5 PARKING BRAKE SW
Left kick panel
F14 FUEL SENDER
E4 ENGINE COOLANT TEMP. SENDER
E7 ENGINE OIL LEVEL SENSOR
Front side of intake manifold

K OVERALL ELECTRICAL WIRING DIAGRAM

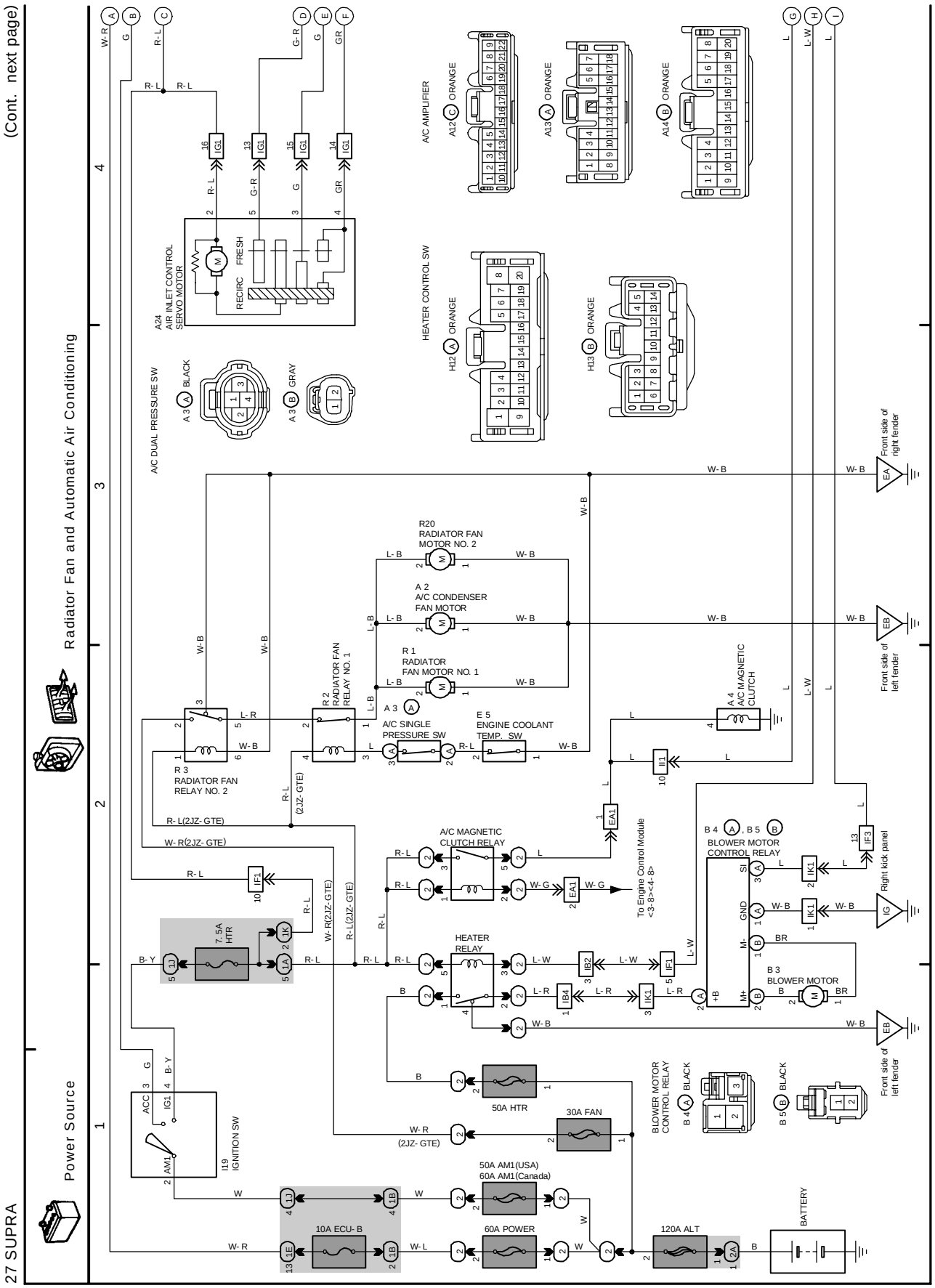

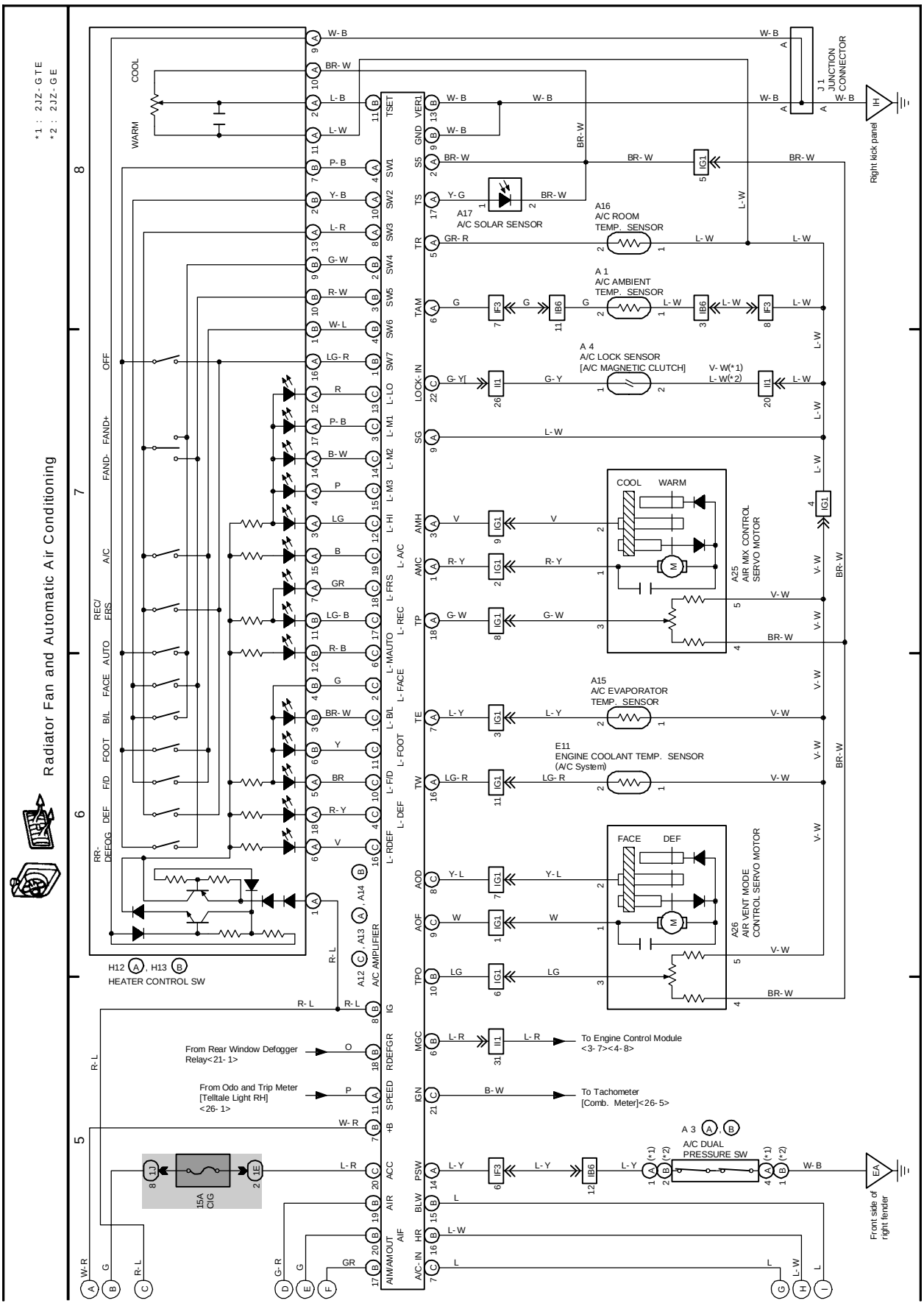
27 SUPRA(Cont' d)
Radiator Fan and Automatic Air Conditioning
*1 : 2JZ-GTE
*2 : 2JZ-GE
HEATER CONTROL SW
H12 (A), H13 (B)
A/C AMPLIFIER
A12 (C), A13 (A), A14 (B)
A16 A/C ROOM TEMP. SENSOR
A 1 A/C AMBIENT TEMP. SENSOR
A 4 A/C LOCK SENSOR [A/C MAGNETIC CLUTCH]
A17 A/C SOLAR SENSOR
A15 A/C EVAPORATOR TEMP. SENSOR
E11 ENGINE COOLANT TEMP. SENSOR (A/C System)
A25 AIR MIX CONTROL SERVO MOTOR
A26 AIR VENT MODE CONTROL SERVO MOTOR
A 3 (A), (B) A/C DUAL PRESSURE SW
J1 JUNCTION CONNECTOR
Right kick panel
Front side of right fender
15A CIG
From Rear Window Defogger Relay<21- 1>
From Odo and Trip Meter [Telltale Light RH] <26- 1>
To Engine Control Module <3- 7><4- 8>
To Tachometer [Comb. Meter]<26- 5>
COOL
WARM
FACE
DEF
W- B
BR- W
L- B
L- W
P- B
Y- B
L- R
G- W
R- W
W- L
LG- R
R
P- B
B- W
P
LG
B
GR
LG- B
R- B
G
BR- W
Y
BR
R- Y
V
R- L
W- R
G
G- R
GR
L
L- W
Y- G
GR- R
G
G- Y
V- W(*1)
L- W(*2)
V
R- Y
G- W
L- Y
LG- R
Y- L
W
LG
B- W
L- R
P
O
W- B
BR- W
L- W
W- R
L- R
L- Y
B- W
L
L- W
L
L
L- W
L
TSET
SW1
SW2
SW3
SW4
SW5
SW6
SW7
L- LO
L- M1
L- M2
L- M3
L- HI
L- A/C
L- FRS
L- REC
L- MAUTO
L- FACE
L- B/L
L- FOOT
L- F/D
L- DEF
L- RDEF
IG
RDEFGR
SPEED
+B
ACC
AIR
AIF
A/C- IN
VERI
GND
SS
TS
TR
TAM
LOCK- IN
SG
AMH
AMC
TP
TE
TW
AOD
AOF
TPO
MGC
IGN
PSW
BLW
HR
AIM/AMOUT
OFF
FAND+
FAND-
A/C
REC/ ERS
AUTO
FACE
B/L
FOOT
F/D
DEF
RR- DEFOG

EMISSION CONTROL SYSTEM

EC042-01

PURPOSE

The emission control systems are installed to reduce the amount of CO, HC and NOx exhausted from the engine ((3), (4) and (5)), to prevent the atmospheric release of blow-by gas-containing HC (1) and evaporated fuel containing HC being released from the fuel tank (2).
The function of each system is shown in these table.

System	Abbreviation	Function
(1) Positive Crankcase Ventilation	PCV	Reduces HC
(2) Evaporative Emission Control	EVAP	Reduces evaporated HC
(3) Exhaust Gas Recirculation	EGR	Reduces NOx
(4) Three-Way Catalytic Converter	TWC	Reduces CO, HC and NOx
(5) Sequential Multiport Fuel Injection *	SFI	Injects a precisely timed, optimum amount of fuel for reduced exhaust emissions

Remark: * For inspection and repair of the SFI system, refer to the SFI section this manual.

PARTS LAYOUT AND SCHEMATIC DRAWING

LOCATION

EC043-01

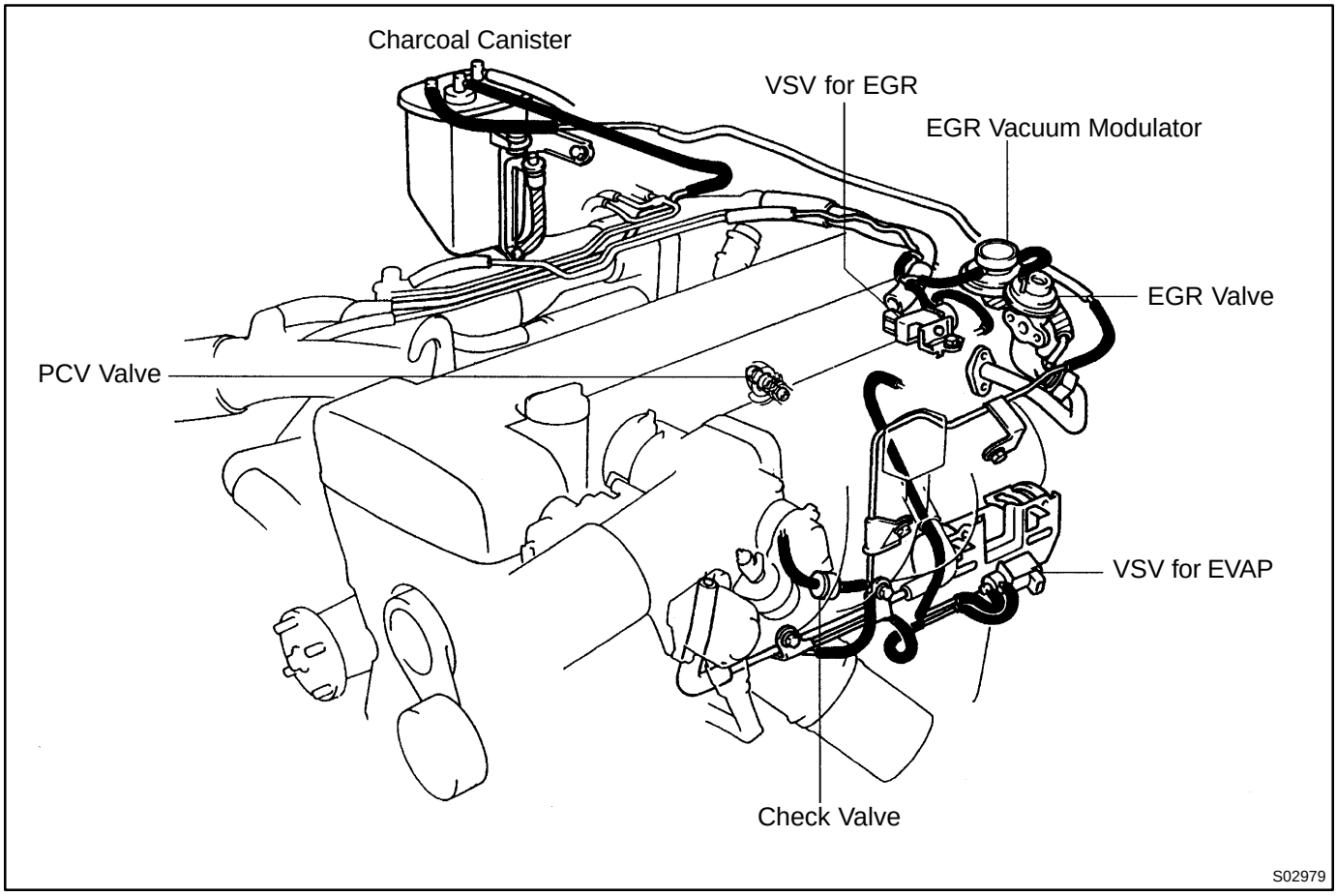

EC044-01

DRAWING

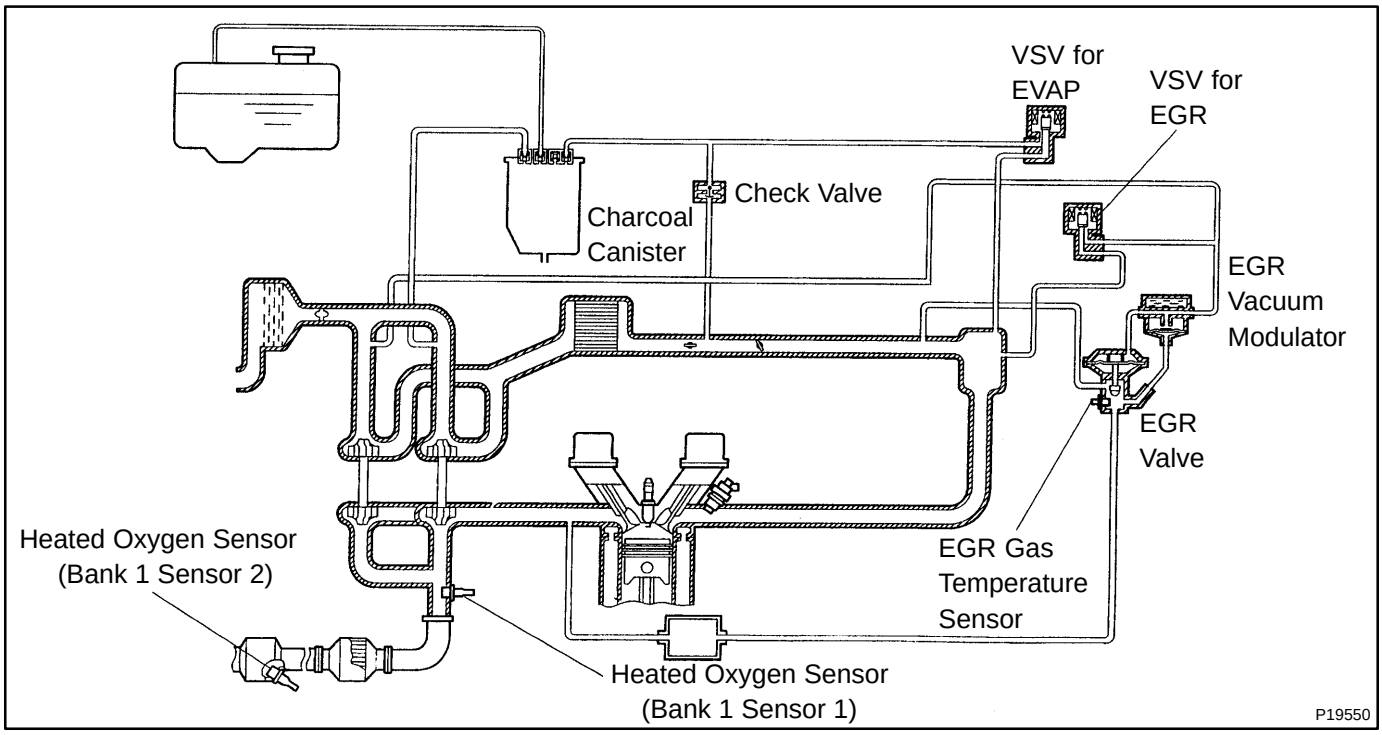

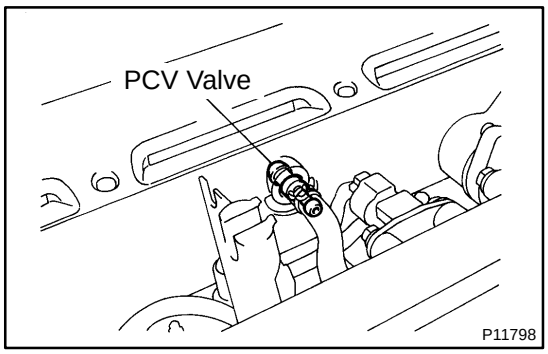

POSITIVE CRANKCASE VENTILATION (PCV) SYSTEM

EC045-01

INSPECTION

1. REMOVE PCV VALVE

(a) Disconnect the PCV hose from the PCV valve.

(b) Remove the PCV valve.

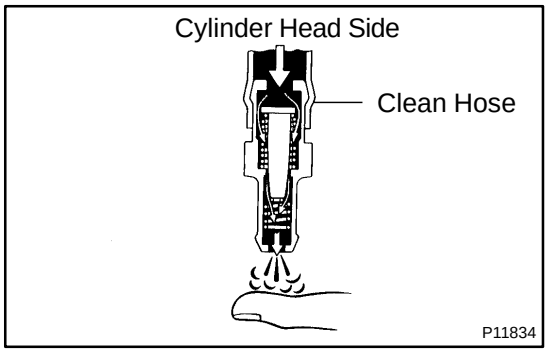

2. INSTALL CLEAN HOSE TO PCV VALVE

3. INSPECT PCV VALVE OPERATION

(a) Blow air into the cylinder head side, and check that air passes through easily.

CAUTION:

- **Do not suck air through the valve.**
- **Petroleum substances inside the valve are harmful.**

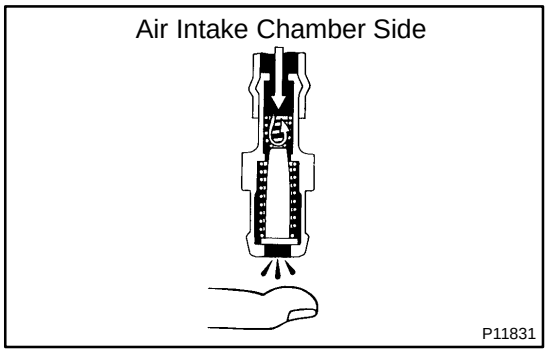

(b) Blow air into the air intake chamber side, and check that air passes through with difficulty.

If operation is not as specified, replace the PCV valve.

4. REMOVE CLEAN HOSE FROM PCV VALVE

5. REINSTALL PCV VALVE

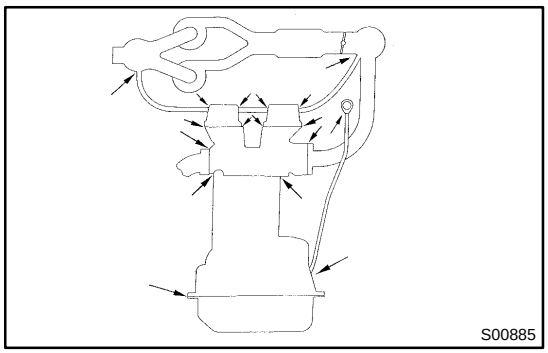

6. VISUALLY INSPECT HOSES, CONNECTIONS AND GASKETS

Check for cracks, leaks or damage.

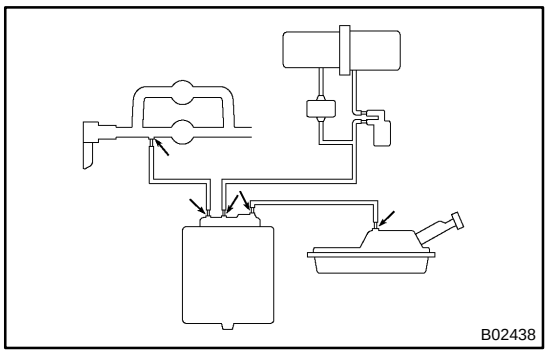

EVAPORATIVE EMISSION (EVAP) CONTROL SYSTEM

EC046-01

INSPECTION

1. VISUALLY INSPECT LINES AND CONNECTIONS

Look for loose connections, sharp bends or damage.

2. VISUALLY INSPECT FUEL TANK

Look for deformation, cracks or fuel leakage.

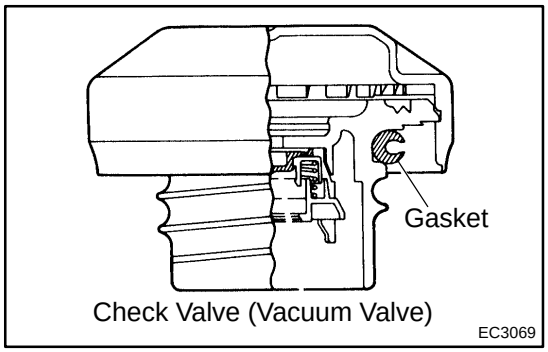

3. VISUALLY INSPECT FUEL TANK CAP

Check if the cap and/or gasket are deformed or damaged.
If necessary, repair or replace the cap.

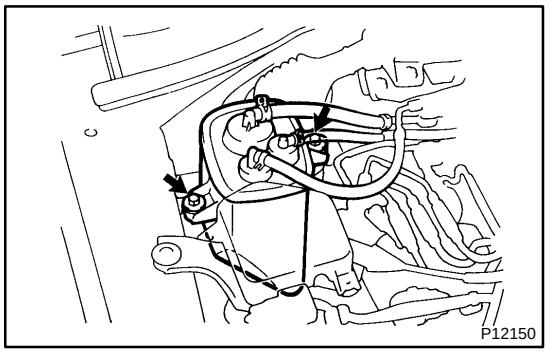

4. REMOVE CHARCOAL CANISTER

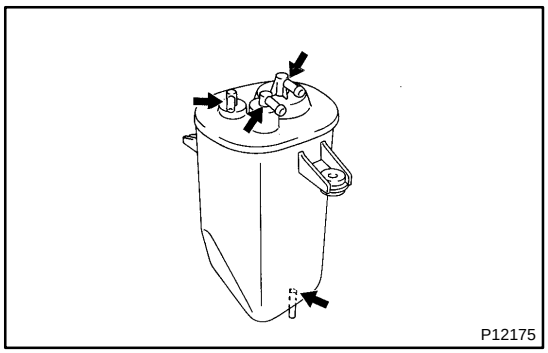

5. VISUALLY INSPECT CHARCOAL CANISTER

Look for cracks or damage.

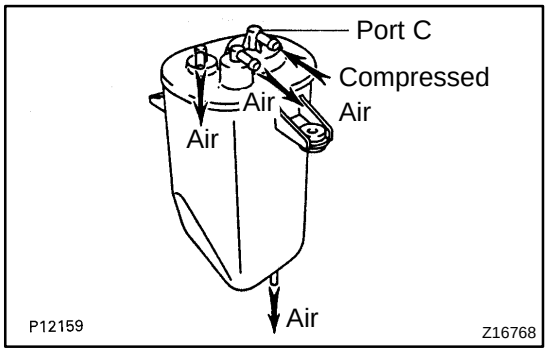

6. CHECK FOR CLOGGED FILTER AND STUCK CHECK VALVE

(a) Using low pressure compressed air (4.71 kPa (48 gf/cm^2, 0.68 psi)), blow into port C and check that air flows without resistance from the other ports.

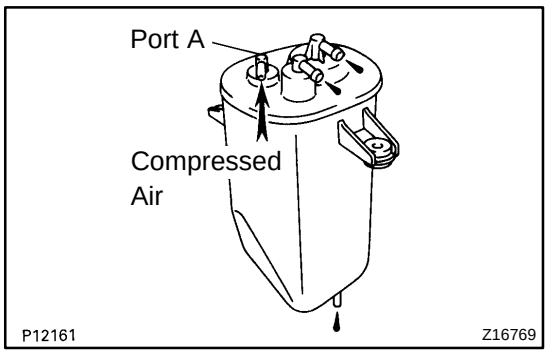

(b) Blow air (4.71 kPa (48 gf/cm^2, 0.68 psi)) into port A, and check that air does not flow from the other ports.

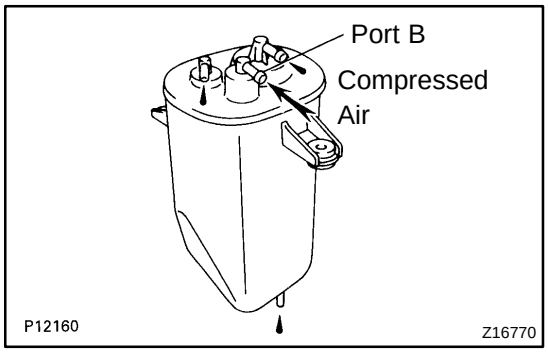

(c) Blow air (4.71 kPa (48 gf/cm^2, 0.68 psi)) into port B, and check that air does not flow from the other ports.

If operation is not as specified, replace the charcoal canister.

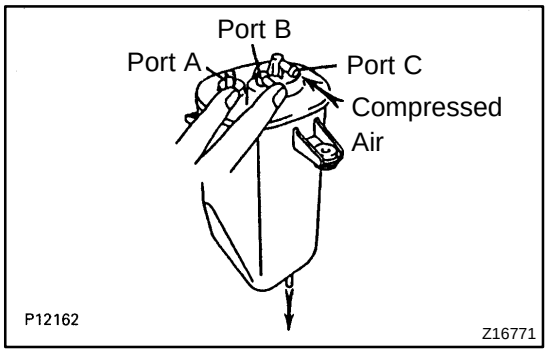

7. CLEAN FILTER IN CANISTER

Clean the filter by blowing 294 kPa (3 kgf/cm^2, 43 psi) of compressed air into port C while holding port A and B closed.

NOTICE:

- **Do not attempt to wash the canister.**
- **No activated carbon should come out.**

8. REINSTALL CHARCOAL CANISTER

9. INSPECT VSV FOR EVAP

(See page SF-71)

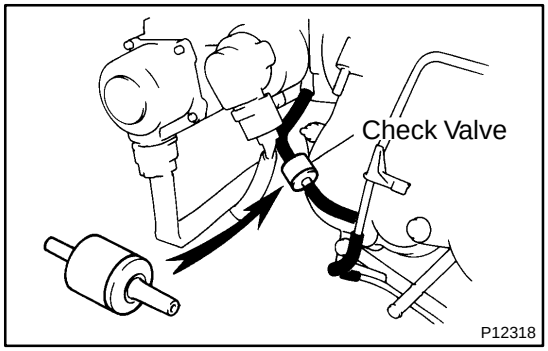

10. REMOVE CHECK VALVE

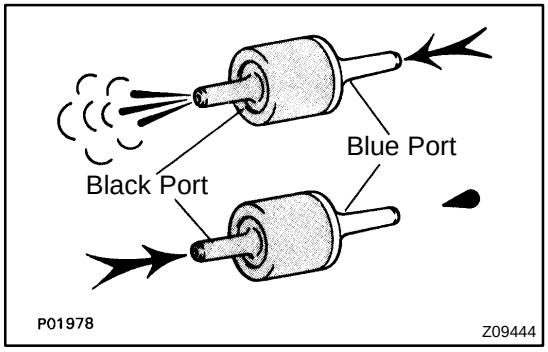

11. INSPECT CHECK VALVE

(a) Check that air flows from the blue port to the black port.

(b) Check that air does not flow from the black port to the blue port.

If operation is not as specified, replace the check valve.

12. REINSTALL CHECK VALVE

HINT:

Install the check valve with the black port facing the purge port side of the throttle body.

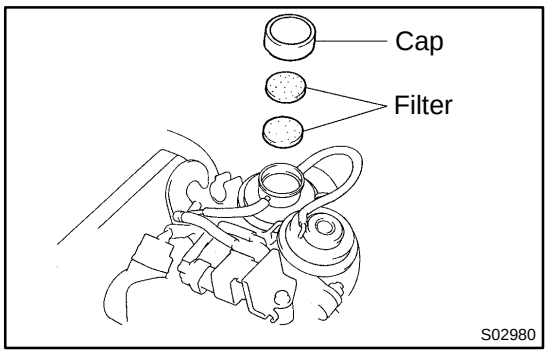

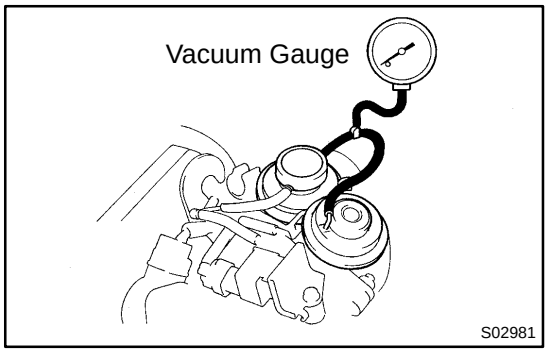

EXHAUST GAS RECIRCULATION (EGR) SYSTEM

EC047-02

INSPECTION

1. CHECK AND CLEAN FILTER IN EGR VACUUM MODULATOR

(a) Remove the cap and 2 filters.
(b) Check the filter for contamination or damage.
(c) Using compressed air, clean the filter.
(d) Reinstall the 2 filters and cap.

HINT:
Install the filter with the coarser surface facing the atmospheric side (outward).

2. INSTALL VACUUM GAUGE

Using a 3-way connector, connect a vacuum gauge to the hose between the EGR valve and EGR vacuum modulator.

3. INSPECT SEATING OF EGR VALVE

Start the engine and check that the engine starts and runs at idle.

4. INSPECT VSV OPERATION WITH COLD ENGINE

(a) M/T
The coolant temperature should be below 50˚C (122˚F).
(1) Start the engine and check idling.
(2) When idling with the lever shifting in the N position, press accelerator pedal slowly to hold the engine speed at 1,600 - 1,800 rpm.
(3) Check that the vacuum gauge indicates zero.

(b) A/T
The coolant temperature should be below 65˚C (149˚F).
(1) Chock the 4 wheels.
(2) Fully apply the parking brake.
(3) Connect a tachometer to the engine.
(4) Start the engine and check idle.
(5) Keep your foot pressed firmly on the brake pedal.
(6) Shift into the D position. Press the accelerator pedal slowly to hold the engine speed at 1,600 - 1,800 rpm.
(7) Check that the vacuum gauge indicates zero.

5. INSPECT VSV OPERATION WITH HOT ENGINE

(a) M/T
Warm up the engine. The coolant temperature in 50˚C (122˚F) or more.
(1) When idling with the lever shifting in the N position, press accelerator pedal slowly to hold the engine speed at 1,600 - 1,800 rpm.
(2) Check that the vacuum gauge indicates low vacuum momentarily.

(b) A/T

Warm up the engine. The coolant temperature in 65˚C (149˚F) or more.

(1) Chock the 4 wheels.
(2) Fully apply the parking brake.
(3) Connect a tachometer to the engine.
(4) Start the engine and check idling.
(5) Keep your foot pressed firmly on the brake pedal.
(6) Shifting into the D position. Press the accelerator pedal slowly to hold the engine speed at 1,600 - 1,800 rpm.
(7) Check that the vacuum gauge indicates low vacuum.

6. REMOVE VACUUM GAUGE

Remove the vacuum gauge, and reconnect the vacuum hoses to their proper locations.

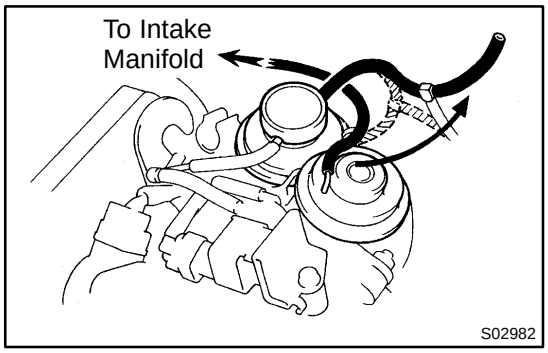

7. INSPECT EGR VALVE

(a) Apply vacuum directly to the EGR valve with the engine idling.
(b) Check that the engine runs rough or dies.
(c) Reconnect the vacuum hoses to their proper locations.

If no problem is found during this inspection, system is normal; otherwise inspect each part.

8. INSPECT VSV FOR EGR

(See page SF-69)

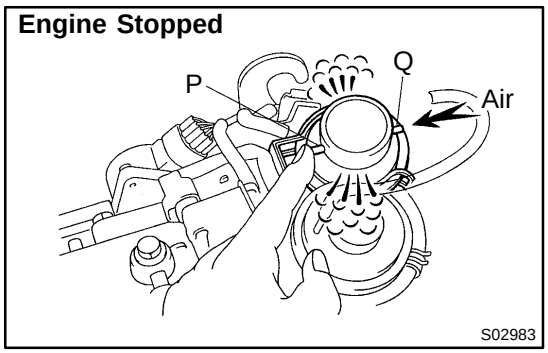

9. DISCONNECT VACUUM HOSES FROM EGR VACUUM MODULATOR

Disconnect the 2 vacuum hoses from ports P and Q of the EGR vacuum modulator.

10. INSPECT EGR VACUUM MODULATOR OPERATION

(a) Block port P with your finger.
(b) Blow air into port Q, and check that air passes through to the air filter side freely.

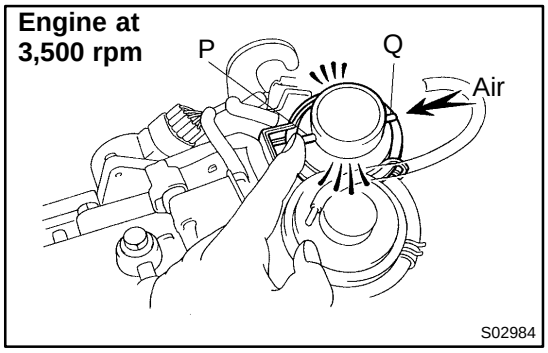

(c) Start the engine, and maintain speed at 3,500 rpm.
(d) Repeat the above test. Check that there is a strong resistance to air flow.

11. RECONNECT VACUUM HOSES TO EGR VACUUM MODULATOR

Reconnect the 2 vacuum hoses to the proper locations.

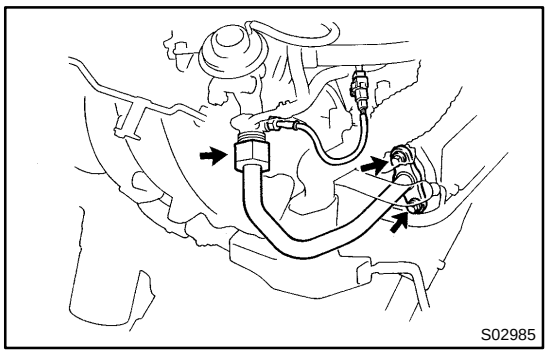

12. REMOVE EGR PIPE

(a) Loosen the union nut of the EGR pipe.

(b) Remove the 2 bolts, EGR pipe and gasket.

13. REMOVE EGR GAS TEMPERATURE SENSOR

14. REMOVE EGR VALVE

(a) Disconnect these hoses from the EGR valve:

- Vacuum hose
- Pressure hose

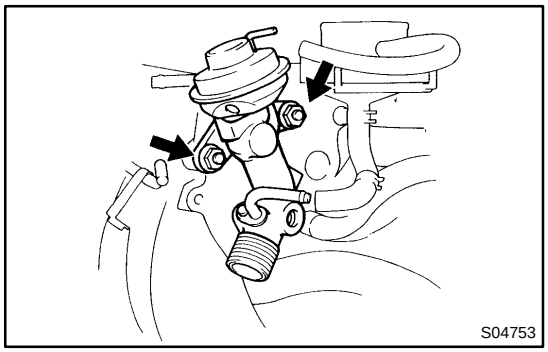

(b) Remove the 2 nuts, EGR valve and gasket.

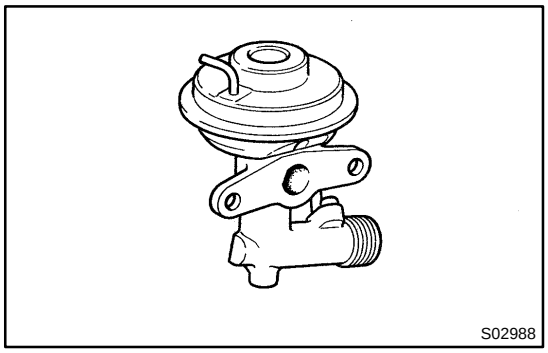

15. INSPECT EGR VALVE

Check for sticking and heavy carbon deposits.

If a problem is found, replace the EGR valve.

16. REINSTALL EGR VALVE

(a) Place a new gasket on the air intake chamber.

(b) Install the EGR valve with the 2 nuts.

Torque: 21 N·m (210 kgf·cm, 15 ft·lbf)

(c) Reconnect these hoses to the EGR valve:

- Vacuum hose
- Pressure hose

17. REINSTALL EGR GAS TEMPERATURE SENSOR

Torque: 20 N·m (200 kgf·cm, 14 ft·lbf)

18. REINSTALL EGR PIPE

(a) Temporarily install the union nut of the EGR pipe.

(b) Install a new gasket and the EGR pipe with the 2 bolts.

Torque: 27 N·m (280 kgf·cm, 20 ft·lbf)

(c) Tighten the union nut of the EGR pipe.

Torque: 64 N·m (650 kgf·cm, 47 ft·lbf)

THREE-WAY CATALYTIC CONVERTER (TWC) SYSTEM

EC048-01

COMPONENTS

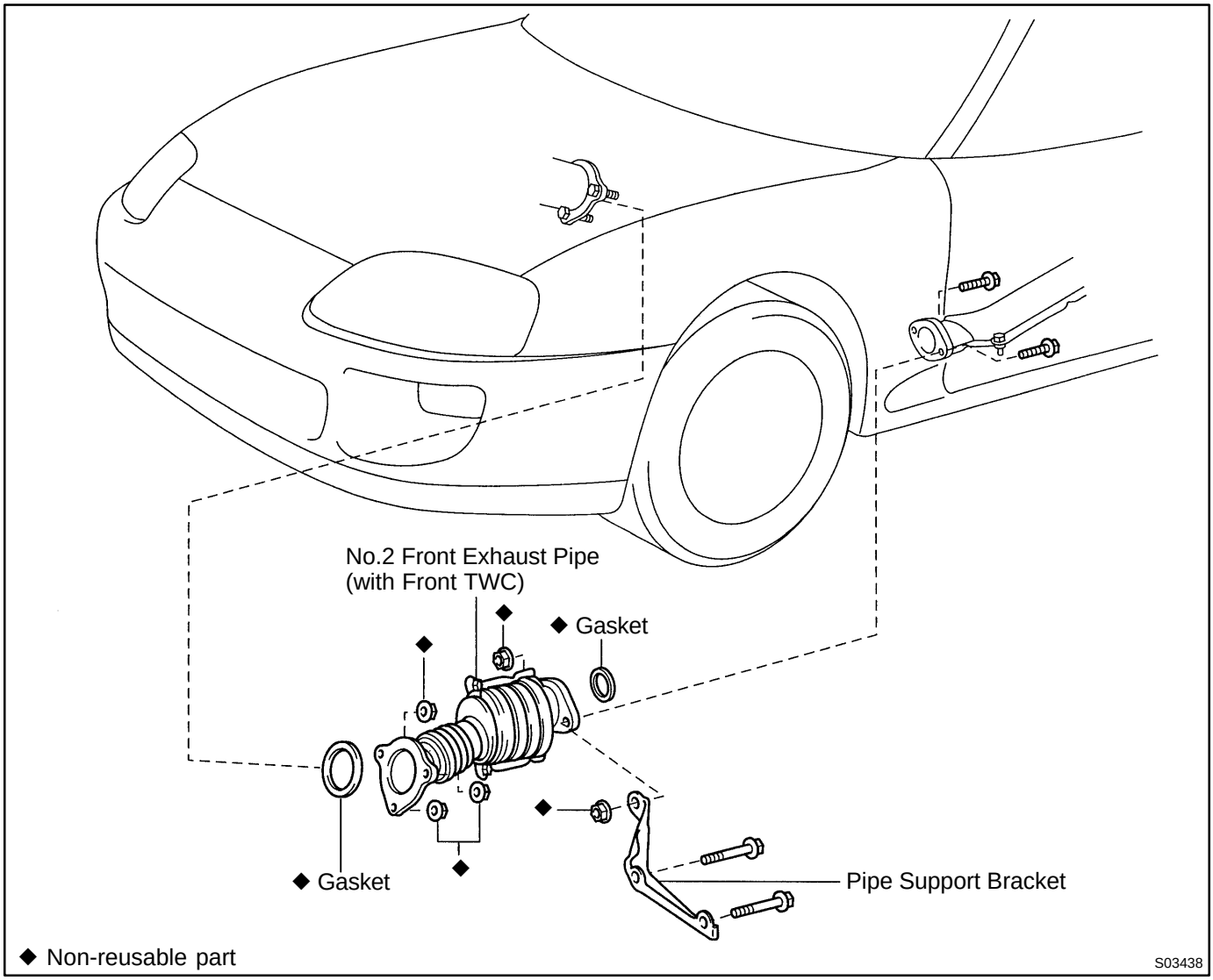

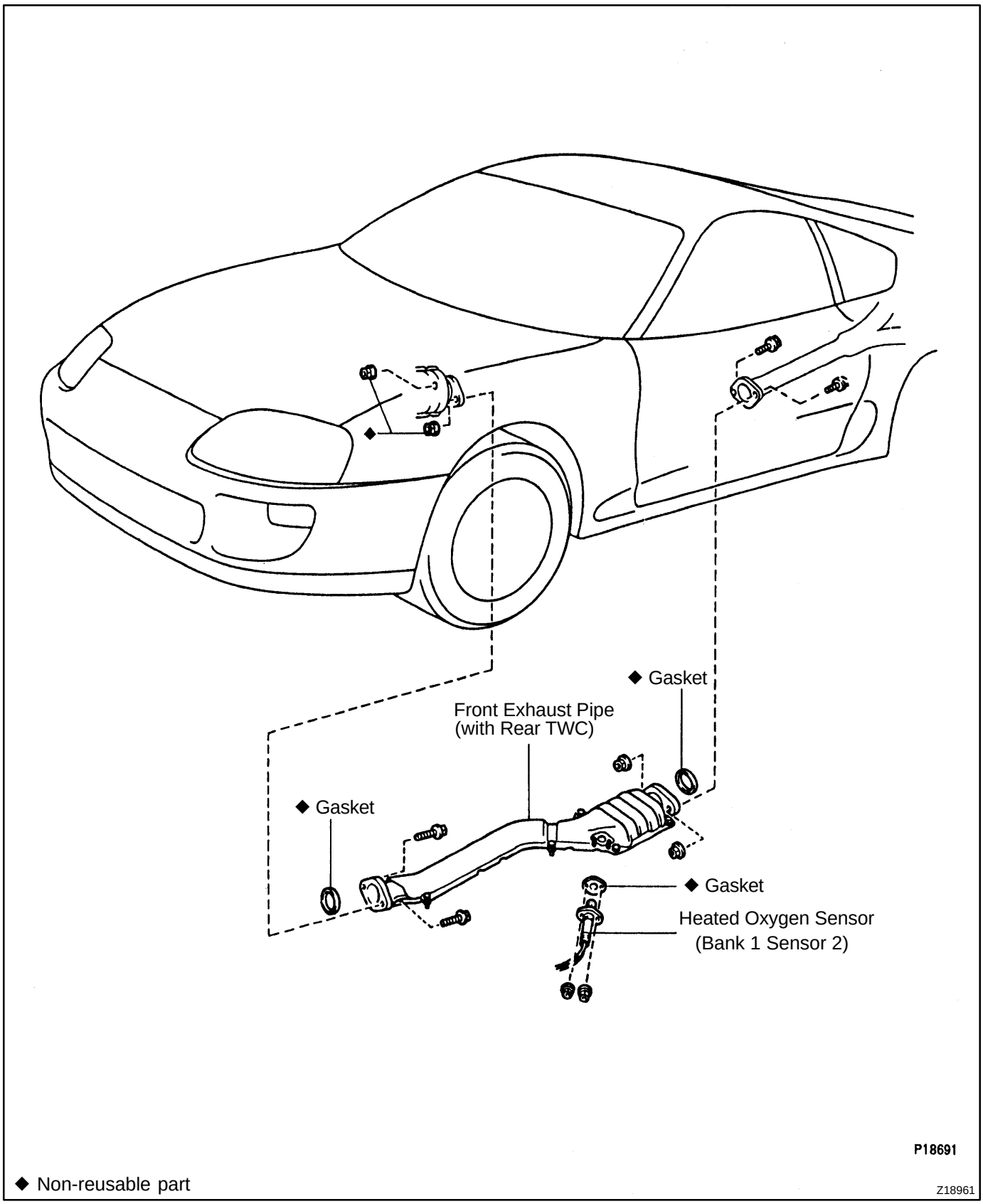

◆ Non-reusable part

Z18961

EC049-01

INSPECTION

1. CHECK CONNECTIONS FOR LOOSENESS OR DAMAGE

2. CHECK CLAMPS FOR WEAKNESS, CRACKS OR DAMAGE

3. CHECK FOR DENTS OR DAMAGE

If any part of the protector is damaged or dented to the extent that it contacts the TWC, repair or replace it.

4. CHECK HEAT INSULATOR FOR DAMAGE

5. CHECK FOR ADEQUATE CLEARANCE BETWEEN CATALYTIC CONVERTER AND HEAT INSULATOR

TIMING BELT

COMPONENTS

EM0AC-02

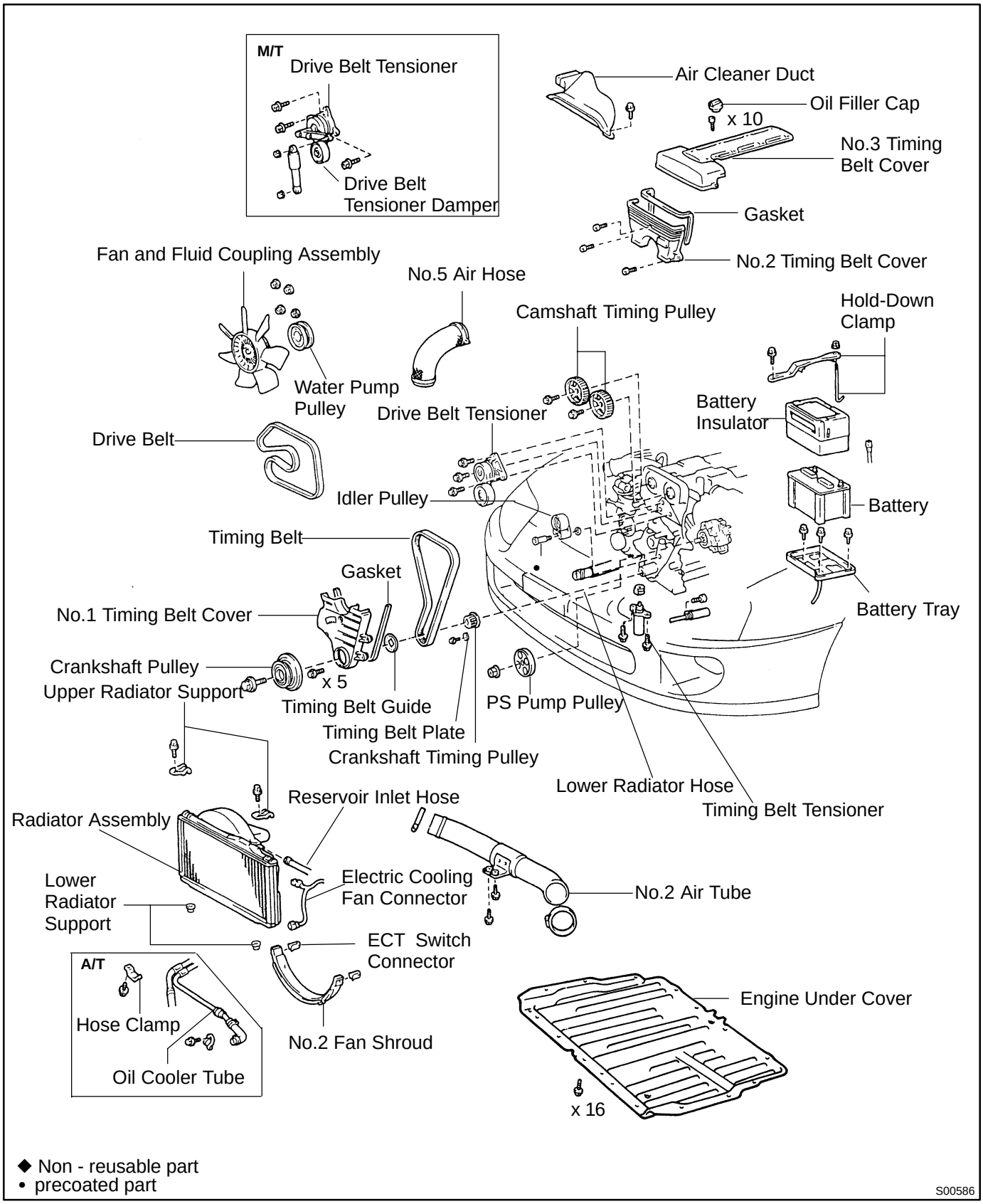

CYLINDER HEAD

COMPONENTS

EM0AG-02

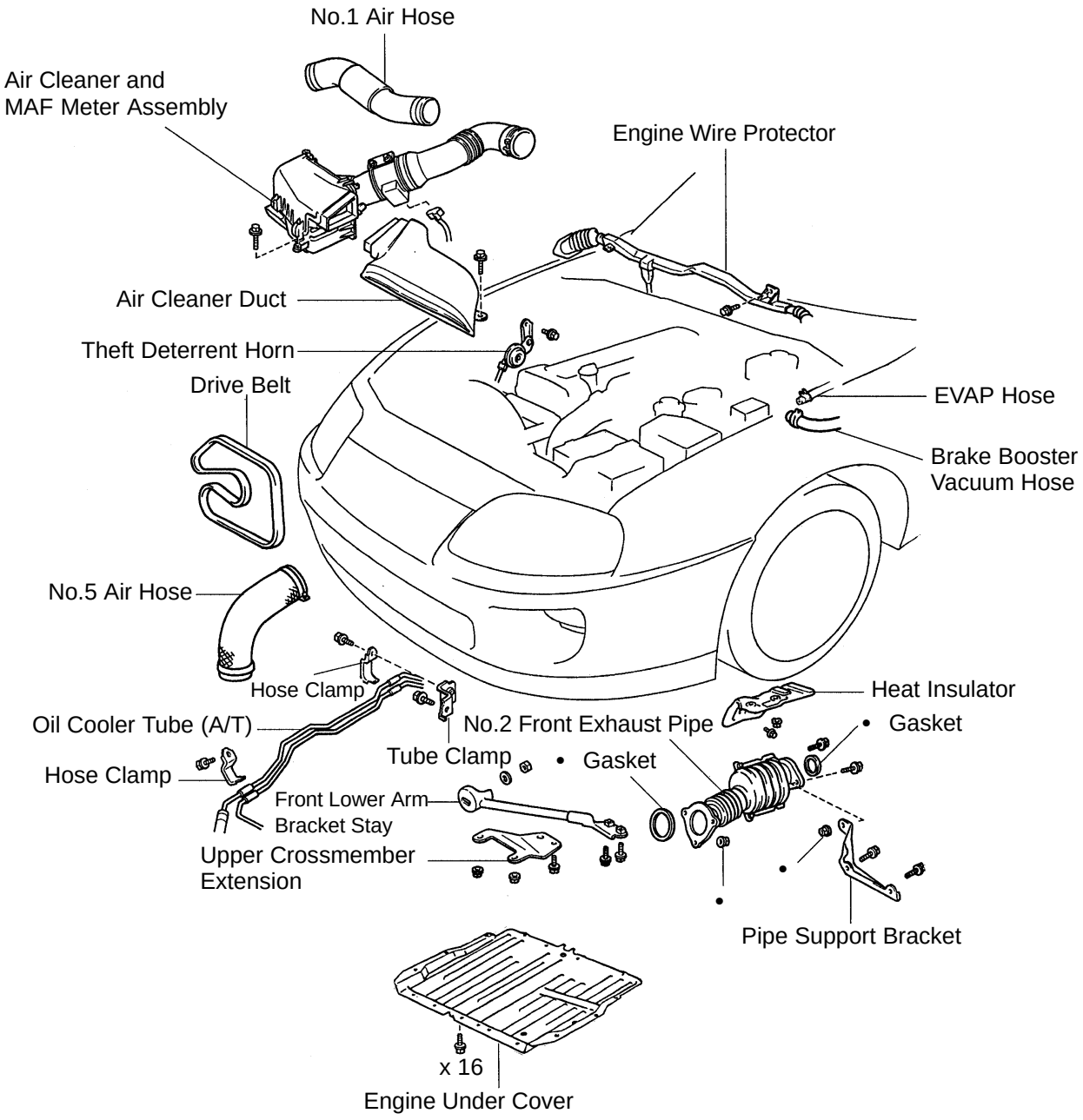

• Non-reusable part

Z13597

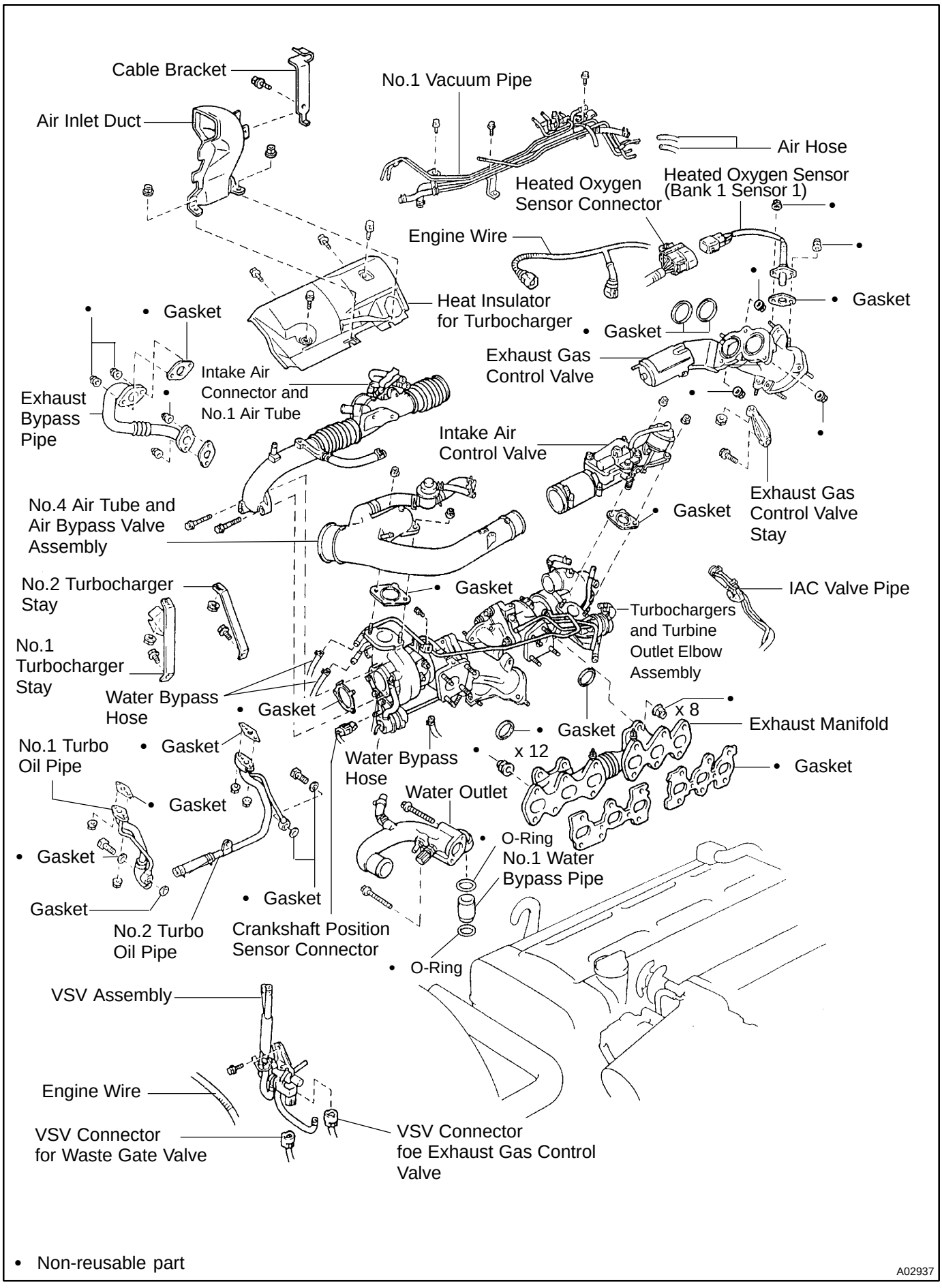
Cable Bracket
Air Inlet Duct
No.1 Vacuum Pipe
Air Hose
Heated Oxygen Sensor Connector
Heated Oxygen Sensor (Bank 1 Sensor 1)
Engine Wire
Heat Insulator for Turbocharger
Gasket
Exhaust Gas Control Valve
Exhaust Bypass Pipe
Intake Air Connector and No.1 Air Tube
Intake Air Control Valve
Exhaust Gas Control Valve Stay
No.4 Air Tube and Air Bypass Valve Assembly
No.2 Turbocharger Stay
IAC Valve Pipe
Turbochargers and Turbine Outlet Elbow Assembly
No.1 Turbocharger Stay
Water Bypass Hose
x 8
Exhaust Manifold
x 12
No.1 Turbo Oil Pipe
Water Outlet
O-Ring
No.1 Water Bypass Pipe
No.2 Turbo Oil Pipe
Crankshaft Position Sensor Connector
VSV Assembly
Engine Wire
VSV Connector for Waste Gate Valve
VSV Connector foe Exhaust Gas Control Valve
• Non-reusable part
A02937

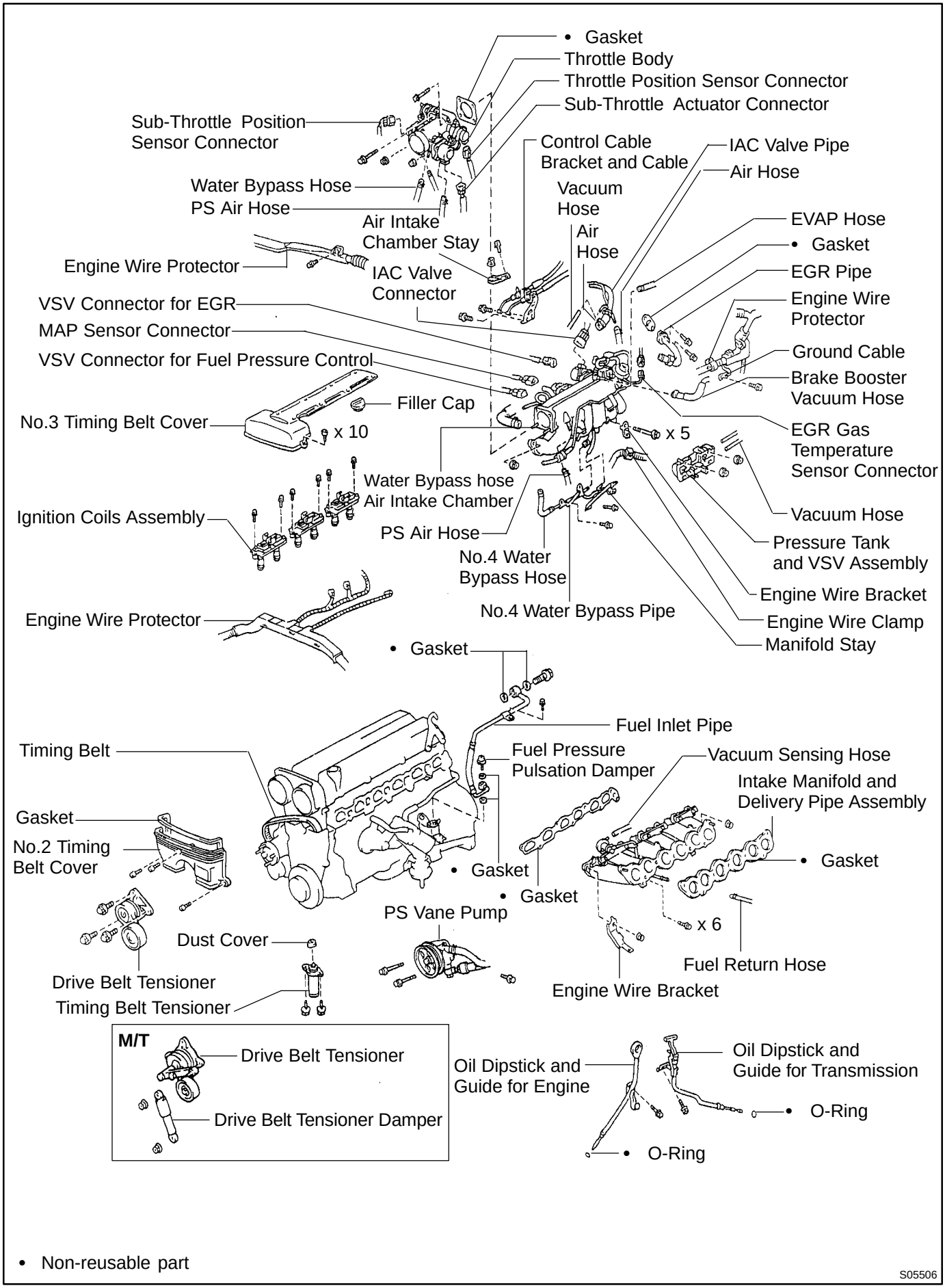

• Non-reusable part

S05506

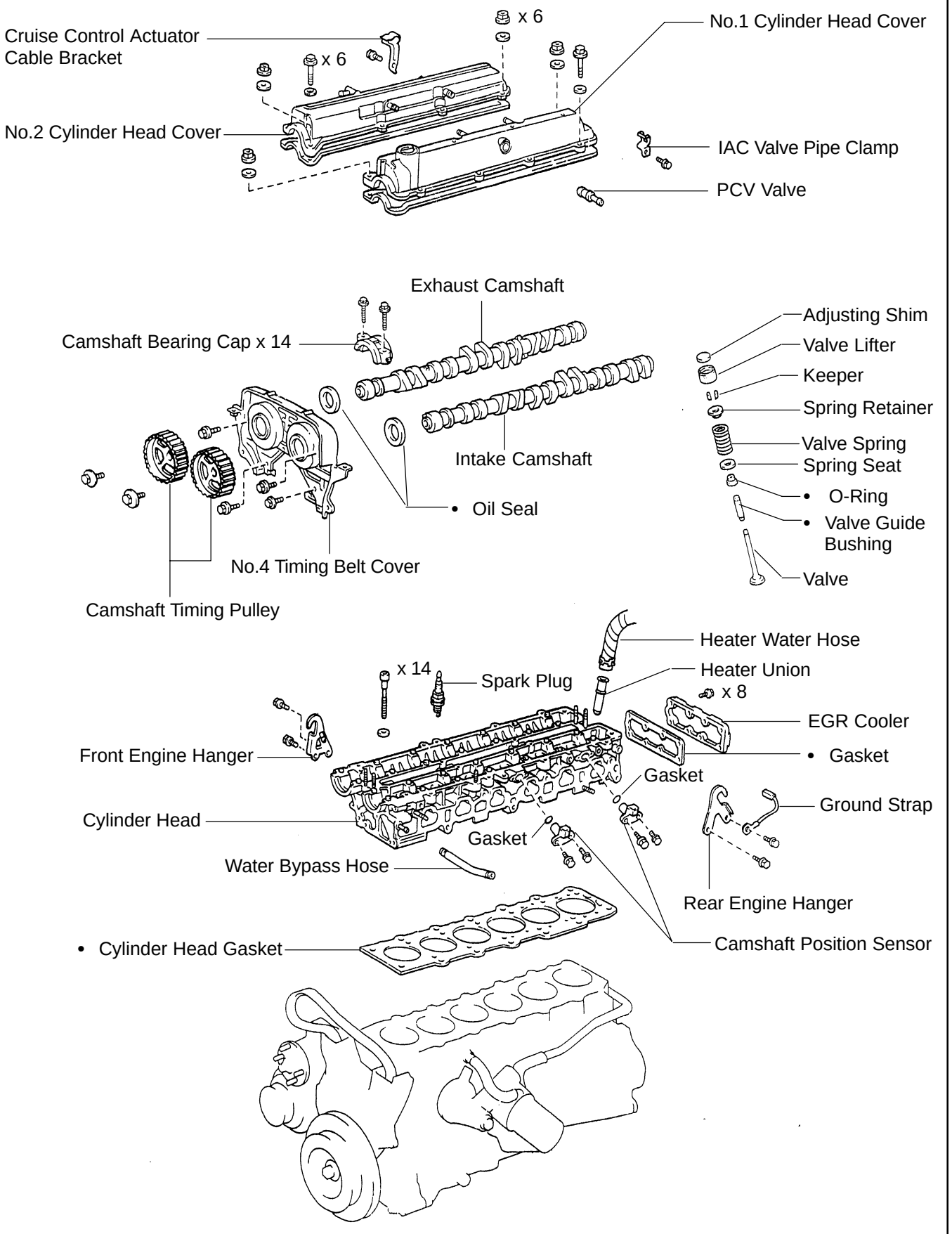

• Non-reusable part

S00587

EM0AI-02

DISASSEMBLY

1. REMOVE ENGINE HANGERS AND GROUND STRAP

2. REMOVE CAMSHAFT POSITION SENSORS

3. REMOVE EGR COOLER

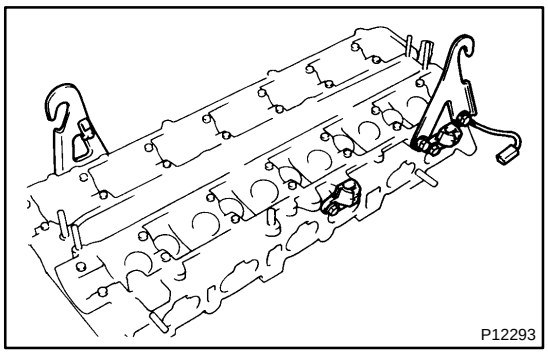

4. REMOVE VALVE LIFTERS AND SHIMS

HINT:

Store the valve lifters and shims in correct order.

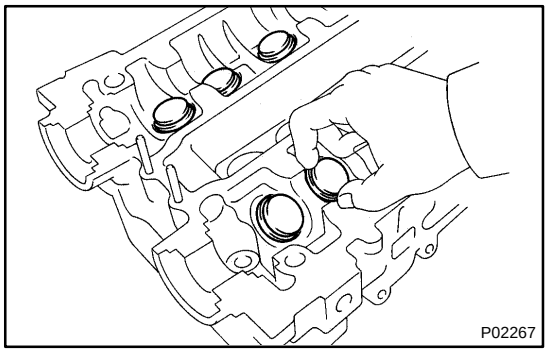

5. REMOVE VALVES

(a) Using SST, compress the valve spring and remove the 2 keepers.

SST 09202-70020 (09202-00010)

(b) Remove the spring retainer, valve spring, valve and spring seat.

HINT:

Store the valves, valve springs, spring seats and spring retainers in correct order.

(c) Using needle-nose pliers, remove the oil seal.

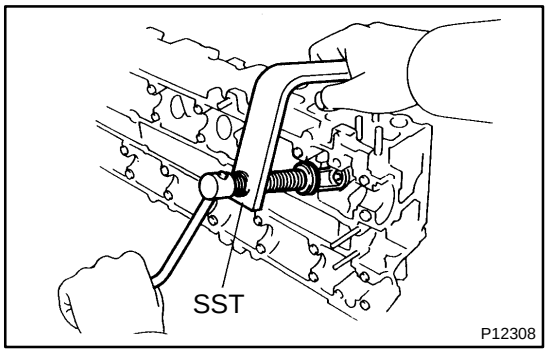

EM0AJ-02

INSPECTION

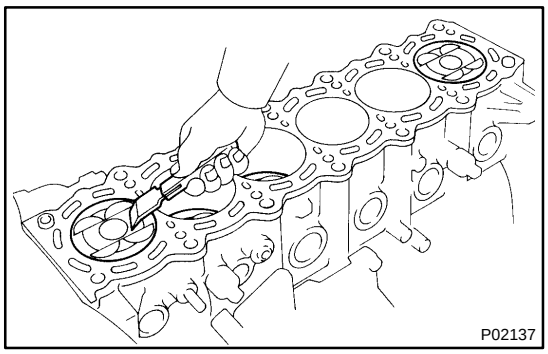

1. CLEAN TOP SURFACES OF PISTONS AND CYLINDER BLOCK

(a) Turn the crankshaft, and bring each piston to top dead center (TDC). Using a gasket scraper, remove all the carbon from the piston top surface.

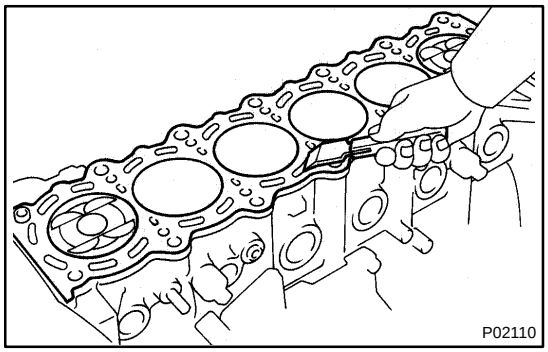

(b) Using a gasket scraper, remove all the gasket material from the top surface of the cylinder block.

(c) Using compressed air, blow carbon and oil from the bolt holes.

CAUTION:
Protect your eyes when using high pressure-compressed air.

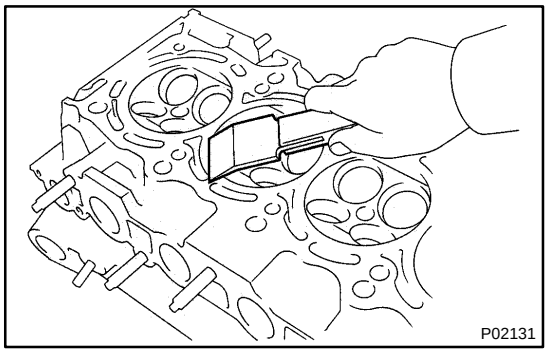

2. REMOVE GASKET MATERIAL

Using a gasket scraper, remove all the gasket material from the cylinder block surface.

NOTICE:
Be careful not to scratch the cylinder block contact surface.

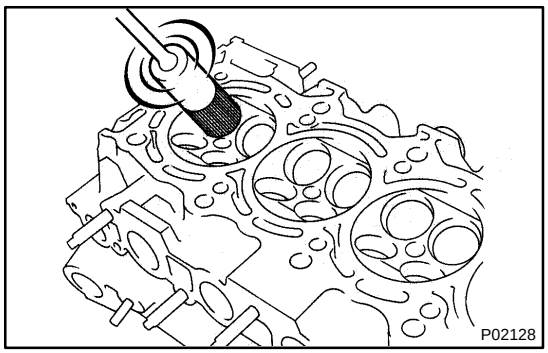

3. CLEAN COMBUSTION CHAMBERS

Using a wire brush, remove all the carbon from the combustion chambers.

NOTICE:
Be careful not to scratch the cylinder block contact surface.

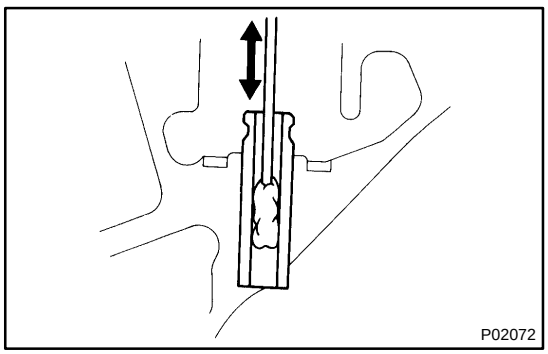

4. CLEAN VALVE GUIDE BUSHINGS

Using a valve guide bushing brush and solvent, clean all the guide bushings.

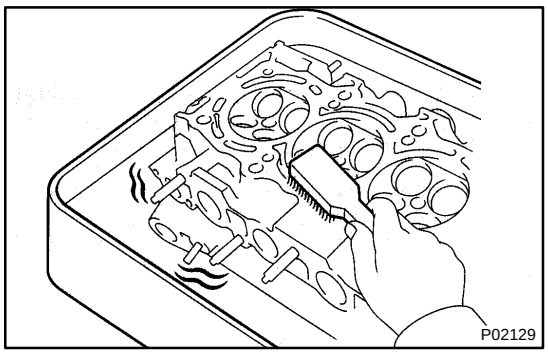

5. CLEAN CYLINDER HEAD

Using a soft brush and solvent, thoroughly clean the cylinder head.

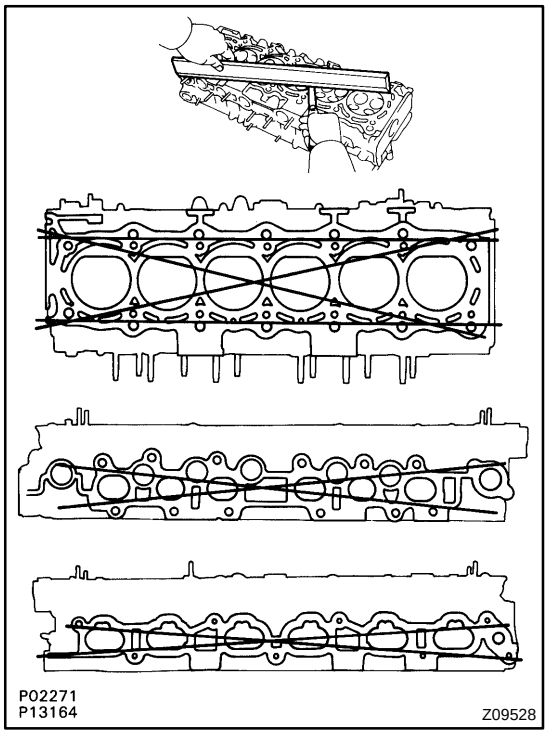

6. INSPECT FOR FLATNESS

Using precision straight edge and feeler gauge, measure the surfaces contacting the cylinder block, intake and exhaust manifolds for warpage.

Maximum warpage: 0.10 mm (0.0039 in.)

If warpage is greater than maximum, replace the cylinder head.

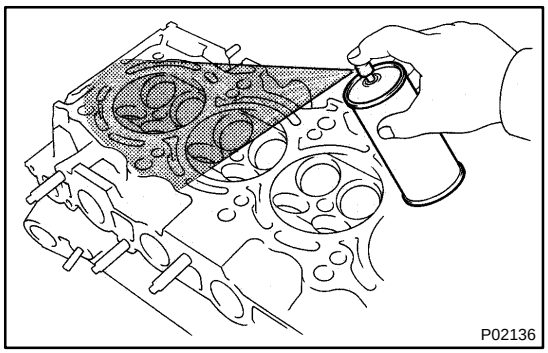

7. INSPECT FOR CRACKS

Using a dye penetrant, check the combustion chamber, intake ports, exhaust ports and cylinder block surface for cracks.
If cracked, replace the cylinder head.

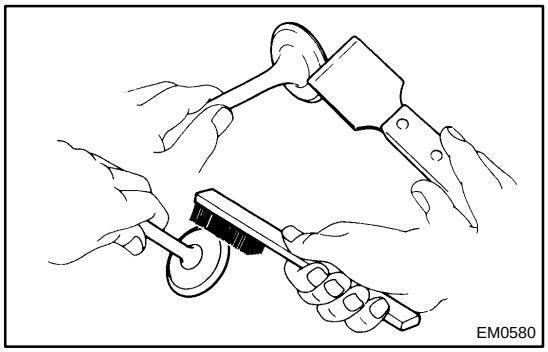

8. CLEAN VALVES

(a) Using a gasket scraper, chip off any carbon from the valve head.
(b) Using a wire brush, thoroughly clean the valve.

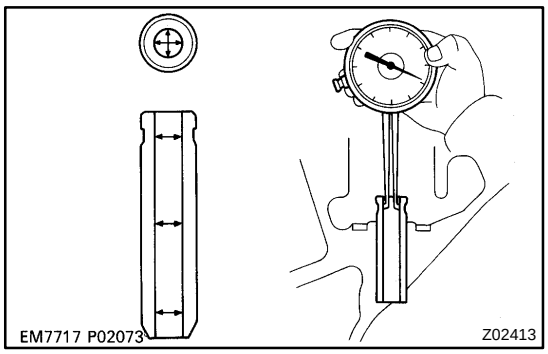

9. INSPECT VALVE STEMS AND GUIDE BUSHINGS

(a) Using a caliper gauge, measure the inside diameter of the guide bushing.

Bushing inside diameter:
6.010 - 6.030 mm (0.2366 - 0.2374 in.)

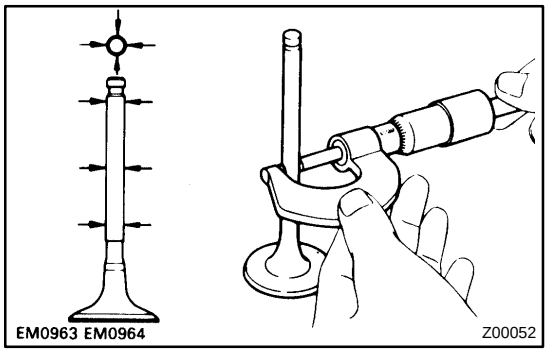

(b) Using a micrometer, measure the diameter of the valve stem.

Valve stem diameter:
Intake 5.970 - 5.985 mm (0.2350 - 0.2356 in.)
Exhaust 5.965 - 5.980 mm (0.2348 - 0.2354 in.)

(c) Subtract the valve stem diameter measurement from the guide bushing inside diameter measurement.

Standard oil clearance:
Intake 0.025 - 0.060 mm (0.0010 - 0.0024 in.)
Exhaust 0.030 - 0.065 mm (0.0012 - 0.0026 in.)
Maximum oil clearance:
Intake 0.08 mm (0.0031 in.)
Exhaust 0.10 mm (0.0039 in.)

If the clearance is greater than maximum, replace the valve and guide bushing.

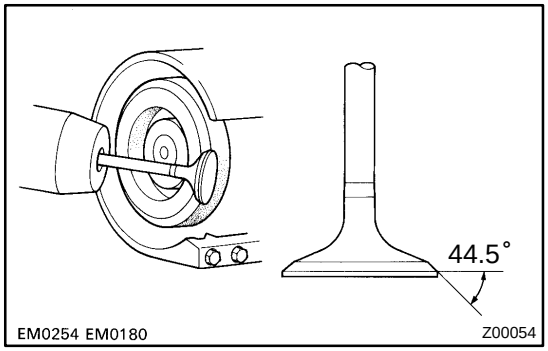

10. INSPECT AND GRIND VALVES

(a) Grind the valve enough to remove pits and carbon.

(b) Check that the valve is ground to the correct valve face angle.

Valve face angle: 44.5°

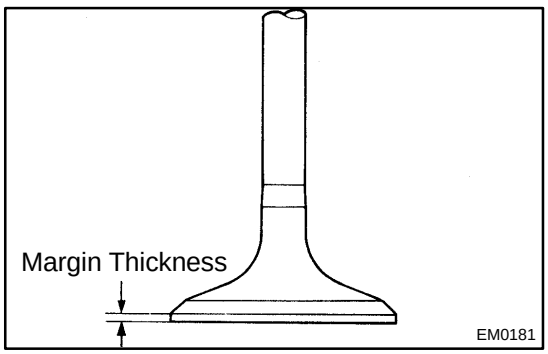

(c) Check the valve head margin thickness.

Standard margin thickness:
0.8 - 1.2 mm (0.031 - 0.047 in.)
Minimum margin thickness:
0.5 mm (0.020 in.)

If the margin thickness is less than minimum, replace the valve.

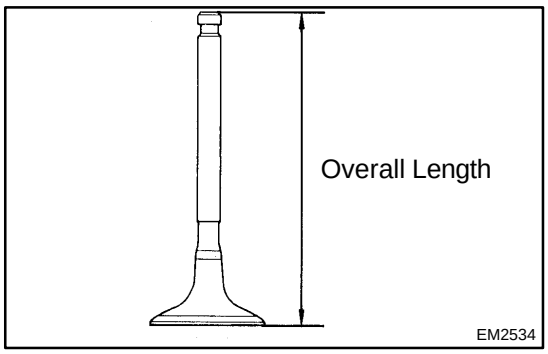

(d) Check the valve overall length.
Standard overall length:
Intake 98.29 - 98.79 mm (3.8697 - 3.8894 in.)
Exhaust 98.84 - 99.34 mm (3.8913 - 3.9110 in.)
Minimum overall length:
Intake 98.19 mm (3.8657 in.)
Exhaust 98.74 mm (3.8874 in.)
If the overall length is less than minimum, replace the valve.

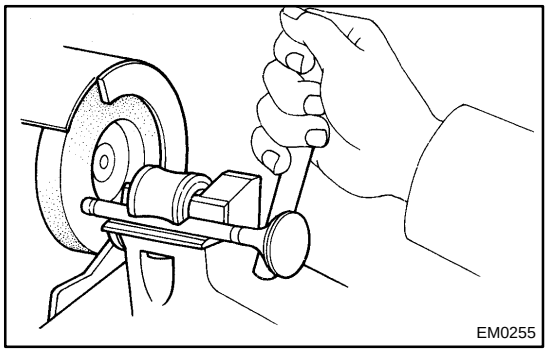

(e) Check the surface of the valve stem tip for wear.
If the valve stem tip is worn, resurface the tip with a grinder or replace the valve.
NOTICE:
Do not grind off more than the minimum overall length.

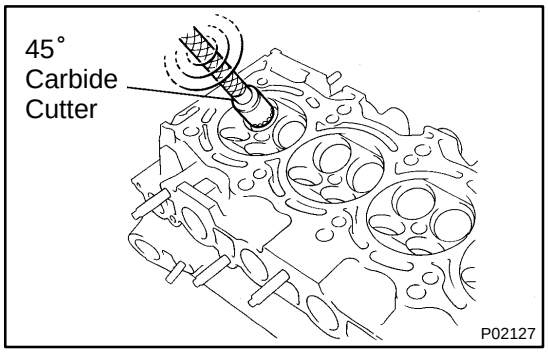

11. INSPECT AND CLEAN VALVE SEATS
(a) Using a 45˚ carbide cutter, resurface the valve seats. Remove only enough metal to clean the seats.

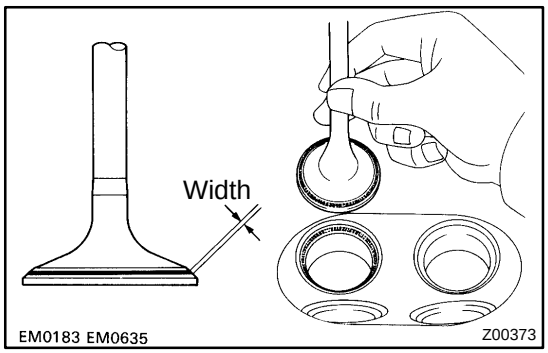

(b) Check the valve seating position.
Apply a thin coat of prussian blue (or white lead) to the valve face. Lightly press the valve against the seat. Do not rotate the valve.
(c) Check the valve face and seat for the following:
- If blue appears 360˚ around the face, the valve is concentric. If not, replace the valve.
- If blue appears 360˚ around the valve seat, the guide and face are concentric. If not, resurface the seat.
- Check that the seat contact is in the middle of the valve face with the following width:

Intake 1.0 - 1.4 mm (0.039 - 0.055 in.)
Exhaust 1.2 - 1.6 mm (0.047 - 0.063 in.)
If not, correct the valve seats as follows:
- If the seating is too high on the valve face, use 15˚ and 45˚ cutters to correct the seat.

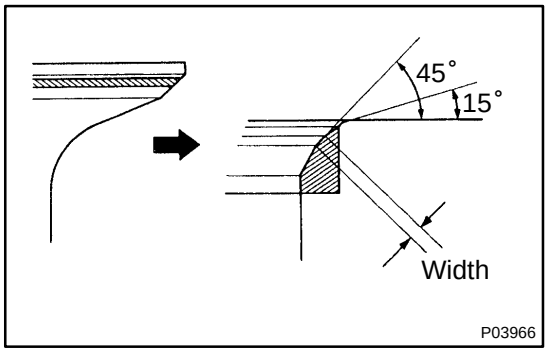

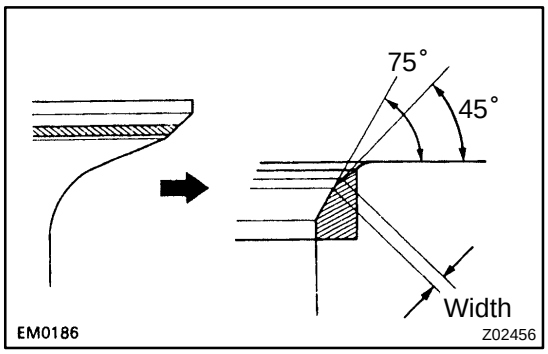

- If the seating is too low on the valve face, use 75° and 45° cutters to correct the seat.

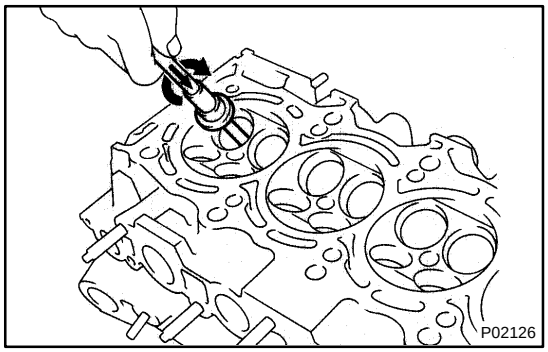

(d) Hand-lap the valve and valve seat with an abrasive compound.
(e) After hand-lapping, clean the valve and valve seat.

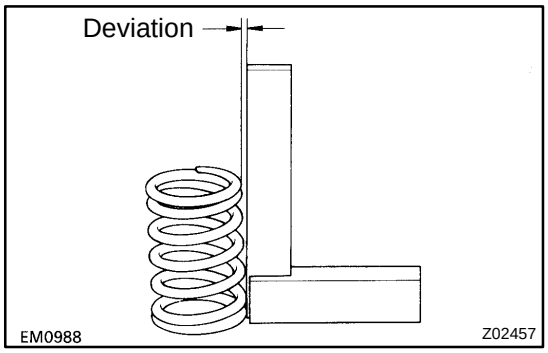

12. INSPECT VALVE SPRINGS

(a) Using a steel square, measure the deviation of the valve spring.

Maximum deviation: 2.0 mm (0.079 in.)

If deviation is greater than maximum, replace the valve spring.

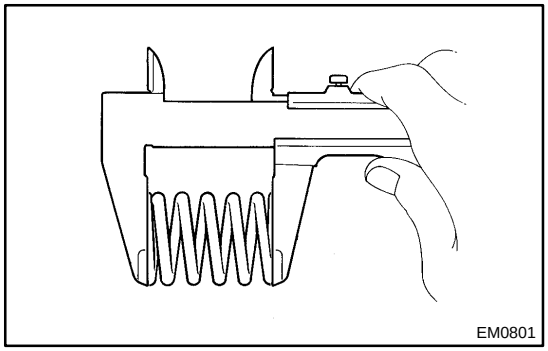

(b) Using vernier calipers, measure the free length of the valve spring.

Free length: 41.70 mm (1.6417 in.)

If the free length is not as specified, replace the valve spring.

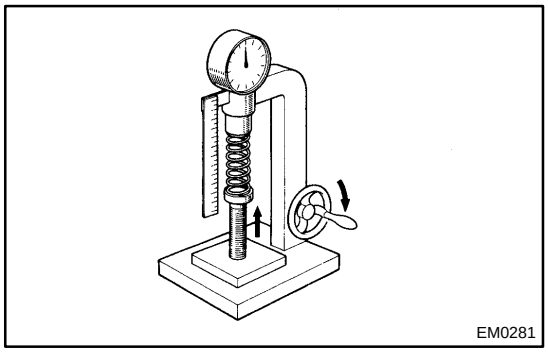

(c) Using a spring tester, measure the tension of the valve spring at the specified installed length.

Installed tension:
186 - 206 N (19.0 - 21.0 kgf, 42 - 46 lbf)
at 34.5 mm (1.358 in.)

If the installed tension is not as specified, replace the valve spring.

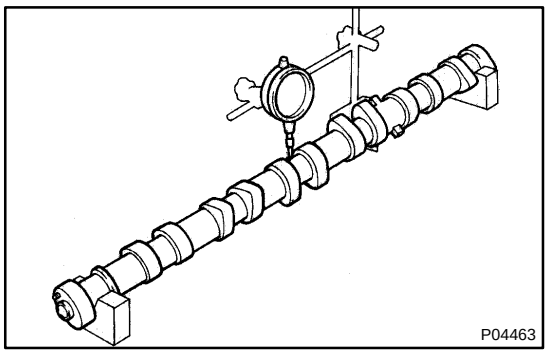

13. INSPECT CAMSHAFT FOR RUNOUT

(a) Place the camshaft on V-blocks.

(b) Using a dial indicator, measure the circle runout at the center journal.

Maximum circle runout: 0.08 mm (0.0031 in.)

If the circle runout is greater than maximum, replace the camshaft.

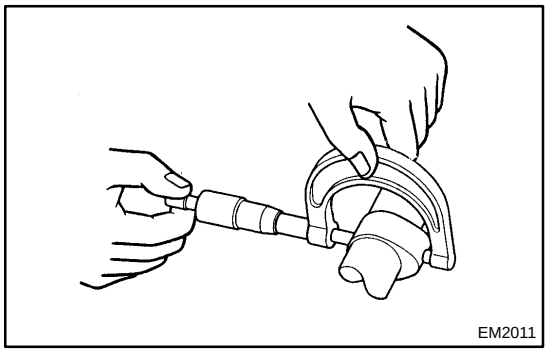

14. INSPECT CAM LOBES

Using a micrometer, measure the cam lobe height.

Standard cam lobe height:
Intake 44.570 - 44.670 mm (1.7547 - 1.7587 in.)
Exhaust 44.770 - 44.870 mm (1.7626 - 1.7665 in.)
Maximum cam lobe height:
Intake 44.42 mm (1.7488 in.)
Exhaust 44.62 mm (1.7567 in.)

If the cam lobe height is less than minimum, replace the camshaft.

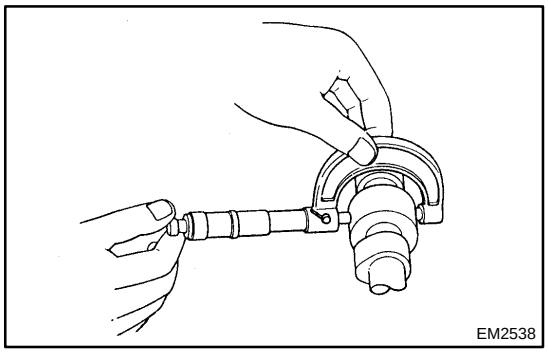

15. INSPECT CAMSHAFT JOURNALS

Using a micrometer, measure the journal diameter.

Journal diameter:
28.949 - 28.965 mm (1.1397 - 1.1404 in.)

If the journal diameter is not as specified, check the oil clearance.

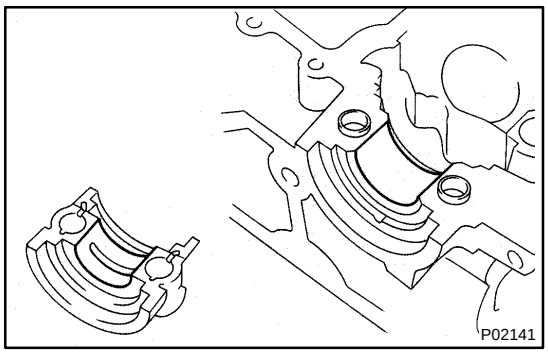

16. INSPECT CAMSHAFT BEARINGS

Check the bearings for flaking and scoring.

If the bearings are damaged, replace the bearing caps and cylinder head as a set.

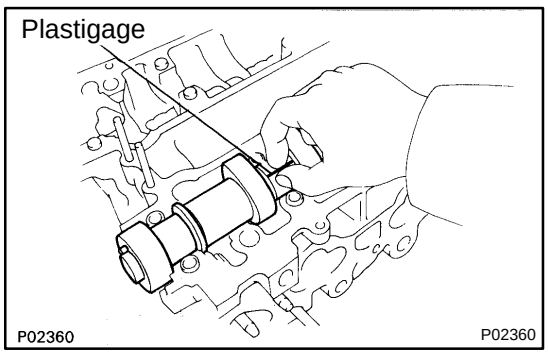

17. INSPECT CAMSHAFT JOURNAL OIL CLEARANCE

(a) Clean the bearing caps and camshaft journals.

(b) Place the camshafts on the cylinder head.

(c) Lay a strip of Plastigage across each of the camshaft journals.

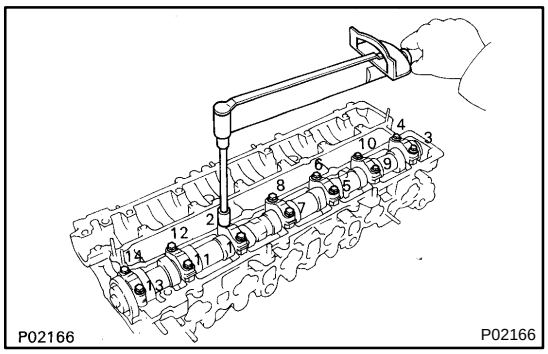

(d) Install the bearing caps (See page EM-47).
Torque: 20 N·m (200 kgf·cm, 14 ft·lbf)

NOTICE:
Do not turn the camshaft.

(e) Remove the bearing caps.

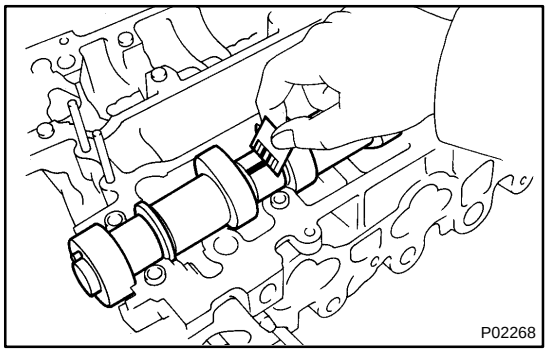

(f) Measure the Plastigage at its widest point.
Standard oil clearance:
0.035 - 0.072 mm (0.0014 - 0.0028 in.)
Maximum oil clearance:
0.10 mm (0.0039 in.)

If the oil clearance is greater than maximum, replace the camshaft. If necessary, replace the bearing caps and cylinder head as a set.

(g) Completely remove the Plastigage.

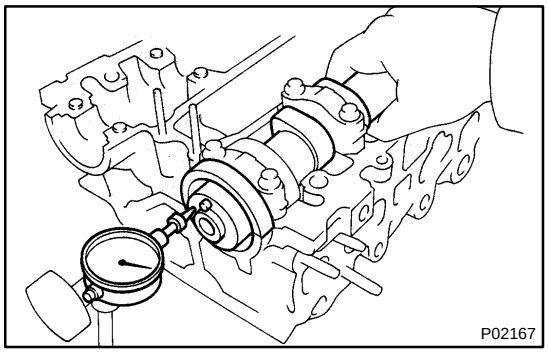

18. INSPECT CAMSHAFT THRUST CLEARANCE

(a) Install the camshafts (See page EM-47).

(b) Using a dial indicator, measure the thrust clearance while moving the camshaft back and forth.
Standard thrust clearance:
0.080 - 0.190 mm (0.0031 - 0.0075 in.)
Maximum thrust clearance:
0.30 mm (0.0118 in.)

If the thrust clearance is greater than maximum, replace the camshaft. If necessary, replace the bearing caps and cylinder head as a set.

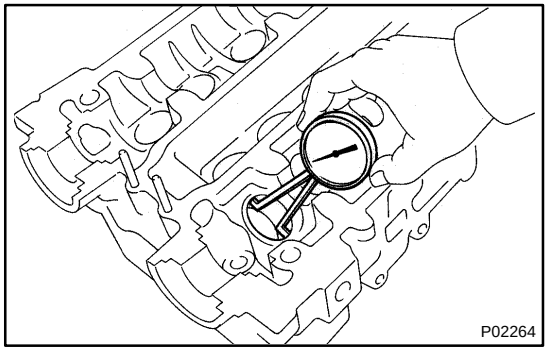

19. INSPECT VALVE LIFTERS AND LIFTER BORES

(a) Using a caliper gauge, measure the lifter bore diameter of the cylinder head.
Lifter bore diameter:
31.000 - 31.016 mm (1.2205 - 1.2211 in.)

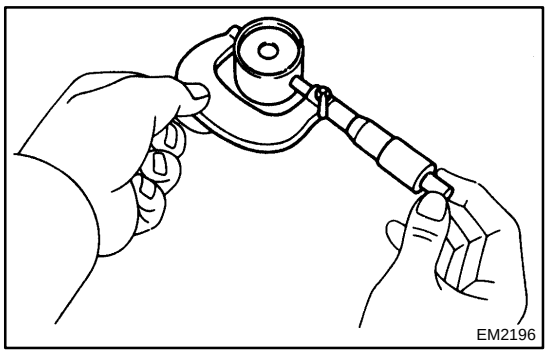

(b) Using a micrometer, measure the lifter diameter.
Lifter diameter:
30.966 - 30.976 mm (1.2191 - 1.2195 in.)

(c) Subtract the lifter diameter measurement from the lifter bore diameter measurement.
Standard oil clearance:
0.024 - 0.050 mm (0.0009 - 0.0020 in.)
Maximum oil clearance:
0.07 mm (0.0028 in.)

If the oil clearance is greater than maximum, replace the lifter. If necessary, replace the cylinder head.

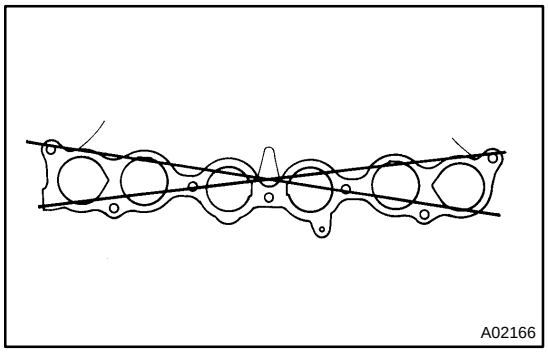

20. INSPECT AIR INTAKE CHAMBER

Using a precision straight edge and feeler gauge, measure the surfaces contacting the intake manifold for warpage.

Maximum warpage: 0.15 mm (0.0059 in.)

If warpage is greater than maximum, replace the chamber.

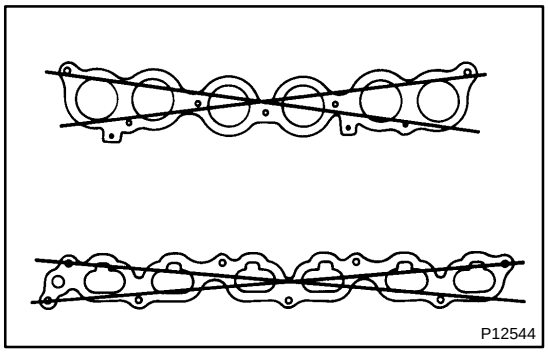

21. INSPECT INTAKE MANIFOLD

Using a precision straight edge and feeler gauge, measure the surfaces contacting the cylinder head and air intake chamber for warpage.

Maximum warpage: 0.15 mm (0.0059 in.)

If warpage is greater than maximum, replace the manifold.

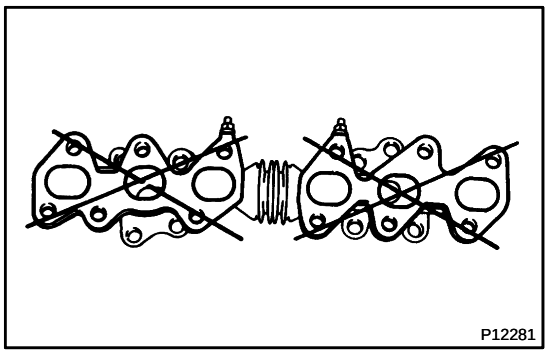

22. INSPECT EXHAUST MANIFOLD

Using a precision straight edge and feeler gauge, measure the surfaces contacting the cylinder head for warpage.

Maximum warpage: 0.80 mm (0.0315 in.)

If warpage is greater than maximum, replace the manifold.

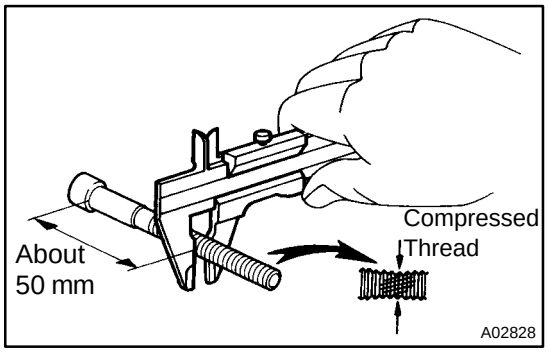

23. INSPECT CYLINDER HEAD BOLTS

Using a vernier caliper, measure the thread outside diameter of the bolt.

Standard outside diameter:
10.8 - 11.0 mm (0.425 - 0.433 in.)
Minimum outside diameter: 10.7 mm (0.421 in.)

If the diameter is less than minimum, replace the bolt.

EM0AK-02

REPLACEMENT

1. REPLACE VALVE GUIDE BUSHINGS

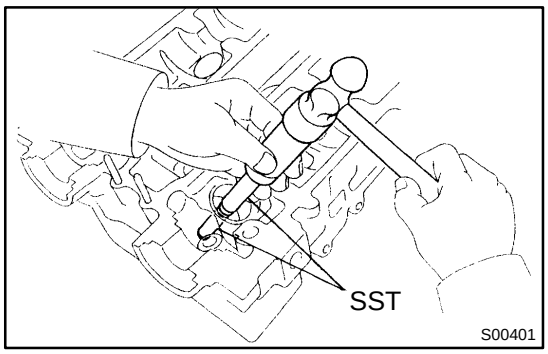

(a) Using SST and a hammer, tap out the guide bushing.
SST 09201-10000 (09201-01060),
09950-70010 (09951-07100)

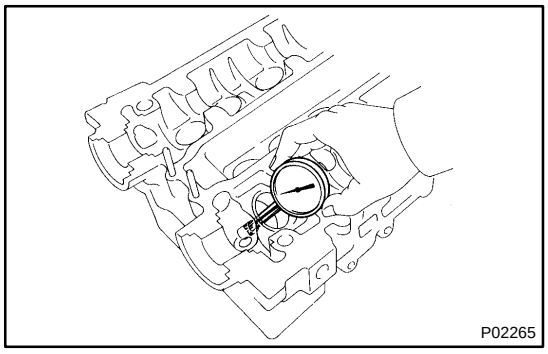

(b) Using a caliper gauge, measure the bushing bore diameter of the cylinder head.

(c) Select a new guide bushing (STD or O/S 0.05).
Both intake and exhaust

Bushing bore diameter mm (in.)	Bushing size
10.985 - 11.006 (0.4350 - 0.4333)	Use STD
11.035 - 11.056 (0.4344 - 0.4353)	Used O/S 0.05

If the bushing bore diameter of the cylinder head is greater than 11.006 mm (0.4333 in.), machine the bushing bore to the following dimension:

11.035 - 11.056 mm (0.4344 - 0.4353 in.)

If the bushing bore diameter of the cylinder head is greater than 11.056 mm (0.4353 in.), replace the cylinder head.

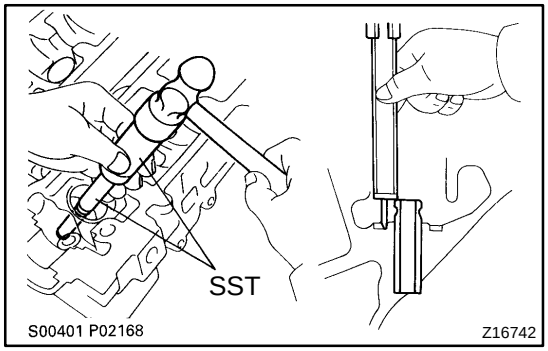

(d) Using SST and a hammer, tap in a new guide bushing to the specified protrusion height.
SST 09201-10000 (09201-01060),
09950-70010 (09951-07100)
Protrusion height:
Intake 12.3 - 12.7 mm (0.484 - 0.500 in.)
Exhaust 11.4 - 11.8 mm (0.449 - 0.465 in.)

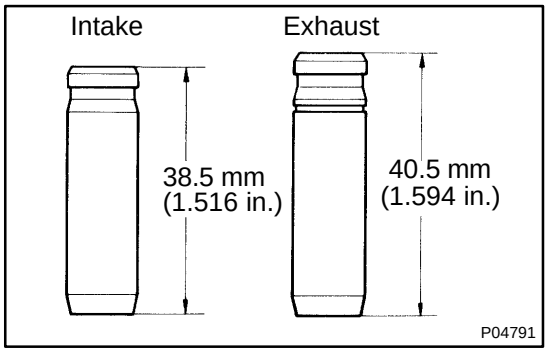

HINT:
Different bushings are used for the intake and exhaust.

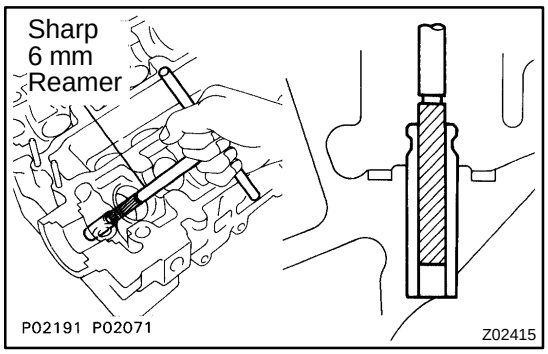

(e) Using a sharp 6 mm reamer, ream the guide bushing to obtain the standard specified clearance (See page EM-35) between the guide bushing and valve stem.

EM0AL-02

REASSEMBLY

HINT:

- Thoroughly clean all parts to be assembled.
- Before installing the parts, apply fresh engine oil to all sliding and rotating surfaces.
- Replace all gaskets and oil seals with new ones.

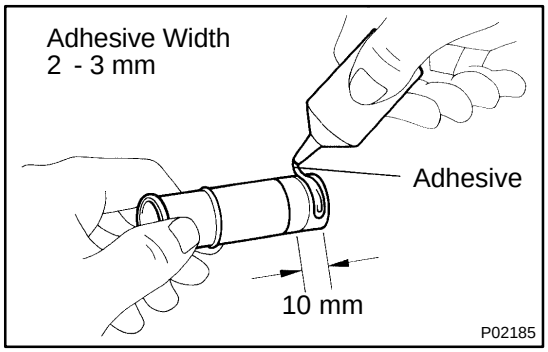

1. INSTALL HEATER UNION

HINT:

When using a new cylinder head, a new heater union must be installed.

(a) Apply adhesive to the end of the heater union as shown in the illustration.

Adhesive:
Part No. 08833-00070, THREE BOND 1324
or equivalent

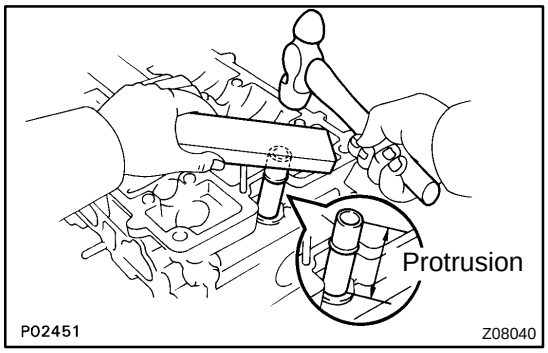

(b) Using a wooden block and hammer, tap in a new heater union, leaving standard position protruding from the cylinder head.

Standard protrusion:
48 mm (1.89 in.)

NOTICE:

Do not tap it in too far.

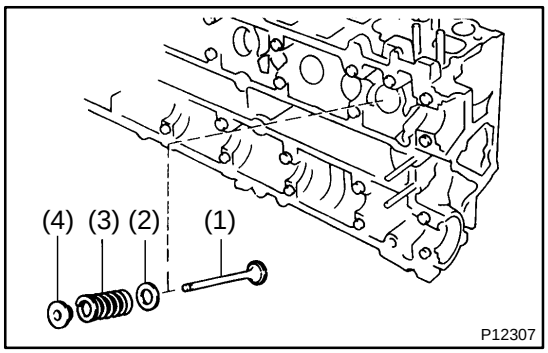

2. INSTALL VALVES

(a) Install a new oil seal on the valve guide bushing.

(b) Install these parts:

(1) Valve
(2) Spring seat
(3) Valve spring
(4) Spring retainer

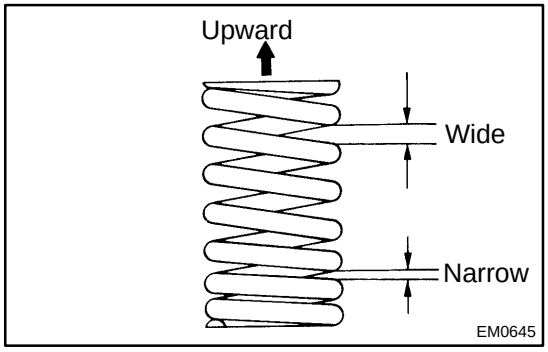

NOTICE:

Confirm the correct direction of the valve spring.

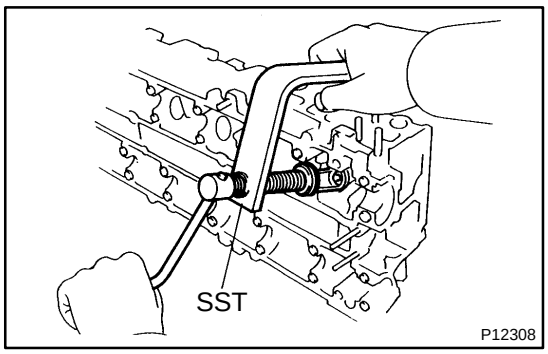

(c) Using SST, compress the valve spring and place the 2 keepers around the valve stem.
SST 09202-70020 (09202-00010)

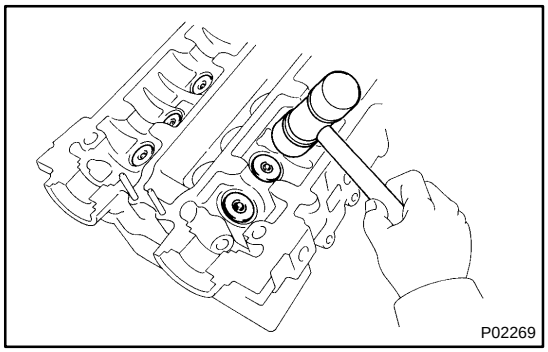

(d) Using a plastic-faced hammer, lightly tap the valve stem tip to ensure a proper fit.

3. INSTALL VALVE LIFTERS AND SHIMS

(a) Install the valve lifter and shim.

(b) Check that the valve lifter rotates smoothly by hand.

4. INSTALL EGR COOLER

Install a new gasket and the EGR cooler with the 8 bolts.

Torque: 8.8 N·m (90 kgf·cm, 78 in.·lbf)

5. INSTALL CAMSHAFT POSITION SENSORS

Install the gasket and sensor with the 2 bolts.

Torque: 8.8 N·m (90 kgf·cm, 78 in.·lbf)

6. INSTALL ENGINE HANGERS AND GROUND STRAP

Torque: 39 N·m (400 kgf·cm, 29 ft·lbf)

EM0AM-02

INSTALLATION

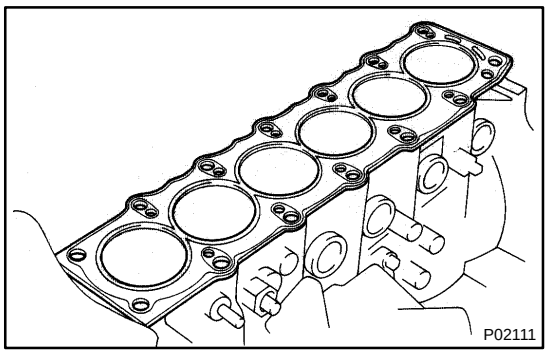

1. PLACE CYLINDER HEAD ON CYLINDER BLOCK

(a) Place a new cylinder head gasket in position on the cylinder block.

NOTICE:

Be sure to install it correctly.

(b) Place the cylinder head in position on the cylinder head gasket.

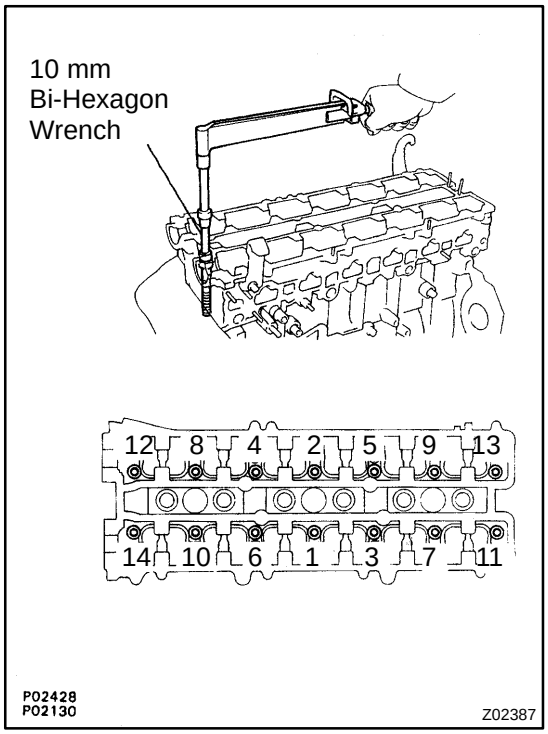

2. INSTALL CYLINDER HEAD BOLTS

HINT:

- The cylinder head bolts are tightened in 2 progressive steps (steps (c) and (f)).
- If any of bolts break or deform, replace them.

(a) Apply a light coat of engine oil on the threads and under the heads of the cylinder head bolts.

(b) Install the 14 plate washers to each cylinder head bolt.

(c) Using a 10 mm bi-hexagon wrench, uniformly tighten the cylinder head bolts, in several passes, in the sequence shown.

Torque: 34 N·m (350 kgf·cm, 25 ft·lbf)

If any of the bolts do not meet the torque specification, replace the bolt.

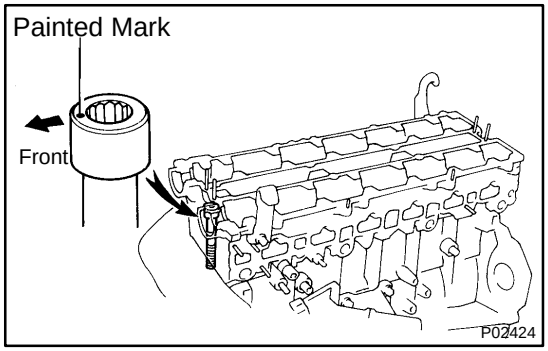

(d) Mark the front of the cylinder head bolt head with paint.

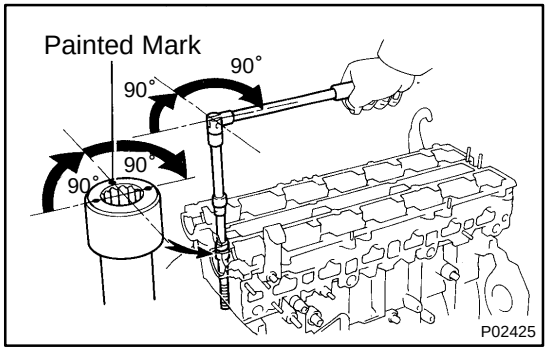

(e) Retighten the cylinder head bolts by 90° in the numerical order shown in the illustration on previous page.

(f) Retighten cylinder head bolts by an additional 90° shown in the illustration on previous page.

(g) Check that the painted mark is now turned to the rear.

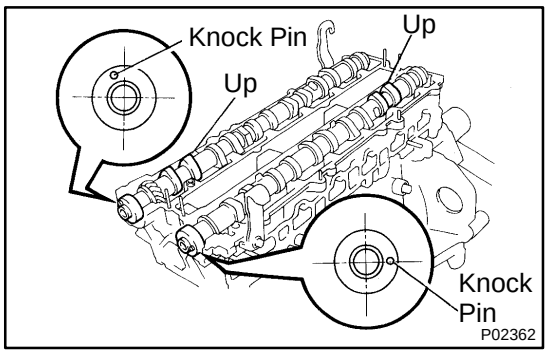

3. INSTALL CAMSHAFTS

(a) Apply engine oil to the thrust portion of the camshaft.

(b) Place the camshaft on the cylinder head with the cam lobe facing up as shown.

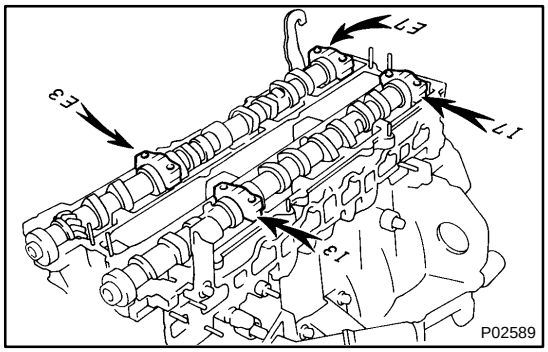

(c) Place the No.3 and No.7 bearing caps in their proper location.

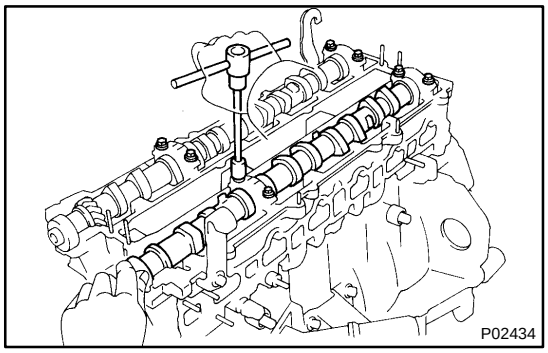

(d) Apply a light coat of engine oil on the threads and under the heads of the bearing cap bolts.

(e) Temporarily tighten these bearing cap bolts uniformly and alternately, in several passes, until the bearing caps are snug with the cylinder head.

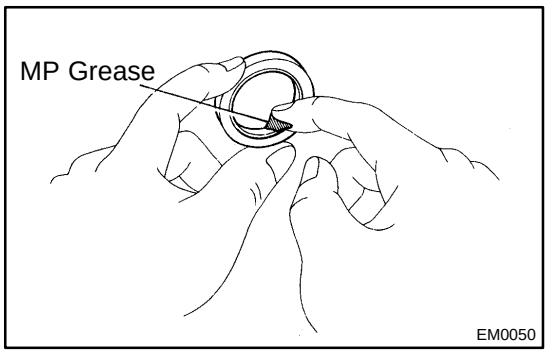

(f) Apply MP grease to a new camshaft oil seal lip.

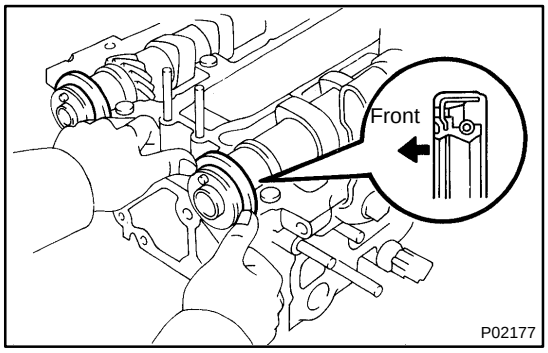

(g) Install the 2 oil seals to the camshafts.

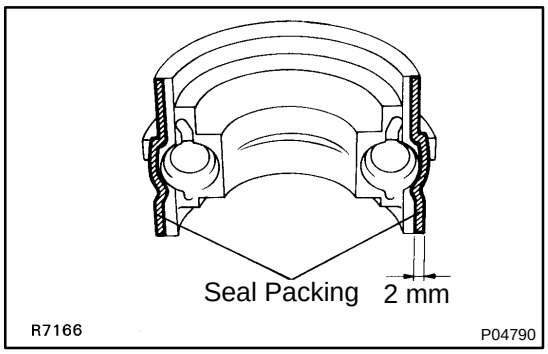

(h) Clean the installed surfaces of the No.1 bearing cap and cylinder head with cleaner.

(i) Apply seal packing to the No.1 bearing cap as shown.
Seal packing: Part No. 08826-00080 or equivalent

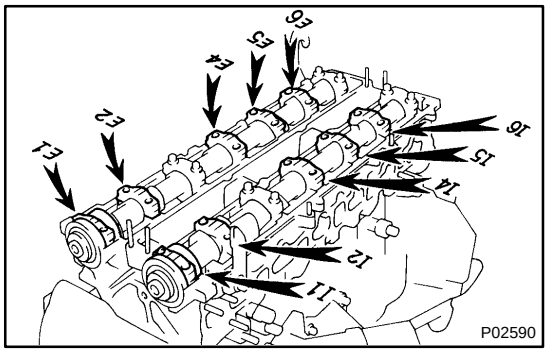

(j) Install the No.1, No.2, No.4, No.5 and No.6 bearing caps in their proper locations.

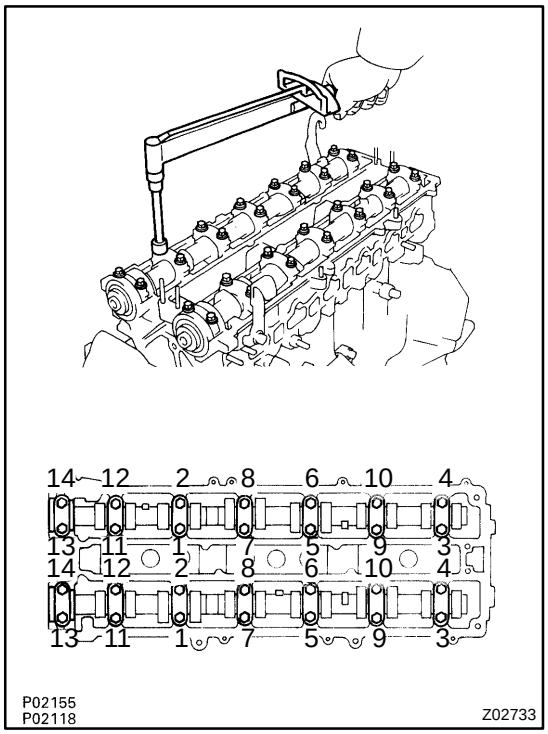

(k) Apply a light coat of engine oil on the threads and under the heads of the bearing cap bolts.

(l) Install and uniformly tighten the 14 bearing cap bolts on one side, in several passes, in the sequence shown.
Torque: 20 N·m (200 kgf·cm, 14 ft·lbf)

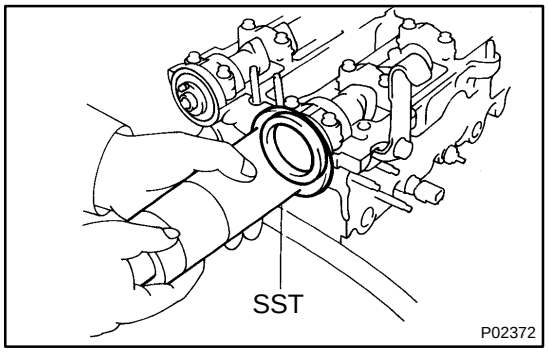

(m) Using SST, push the 2 oil seals in as far as they can go.
SST 09316-6001 1 (09316-00011, 09316-00051)

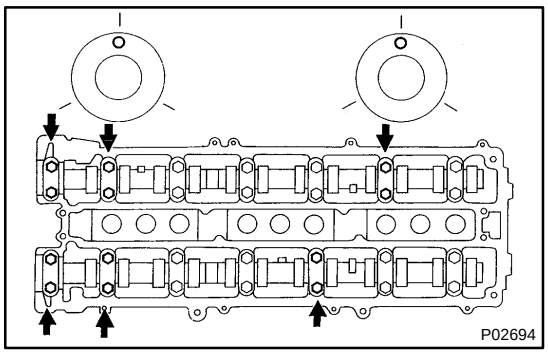

(n) Rotate the camshaft with a wrench at the hexagon position, bring the forward straight pin up.
(o) Loosen the 12 bearing cap bolts as shown, until they can be turned by hand; retighten, in several passes.
Torque: 20 N·m (200 kgf·cm, 14 ft·lbf)

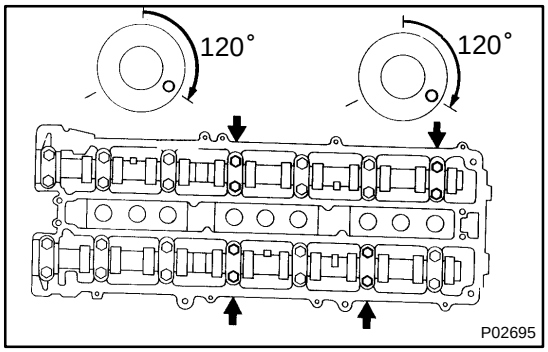

(p) Turn the camshaft 1/3 of revolution.
(q) Loosen the 8 bearing cap bolts as shown, until they can be turned by hand; retighten, in several passes.
Torque: 20 N·m (200 kgf·cm, 14 ft·lbf)

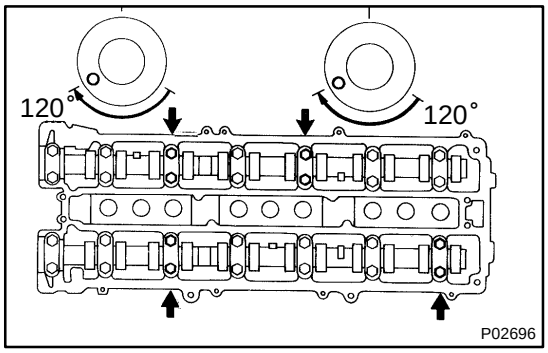

(r) Turn the camshaft a further 1/3 of a revolution.
(s) Loosen the 8 bearing cap bolts as shown, until they can be turned by hand; retighten, in several passes.
Torque: 20 N·m (200 kgf·cm, 14 ft·lbf)

4. CHECK AND ADJUST VALVE CLEARANCE
(See page EM-4)

Turn the camshaft, and position the cam lobe upward, check and adjust the valve clearance.

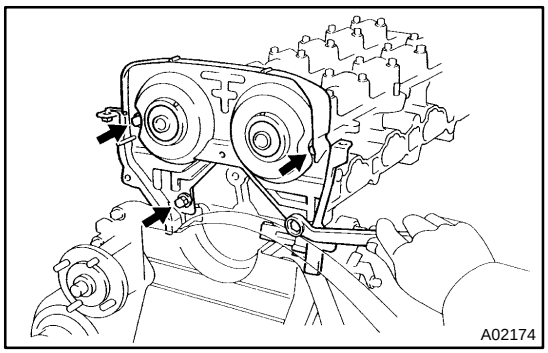

5. INSTALL NO.4 TIMING BELT COVER

Install the timing belt cover with 4 bolts.
Torque: 8.0 N·m (80 kgf·cm, 71 in.·lbf)

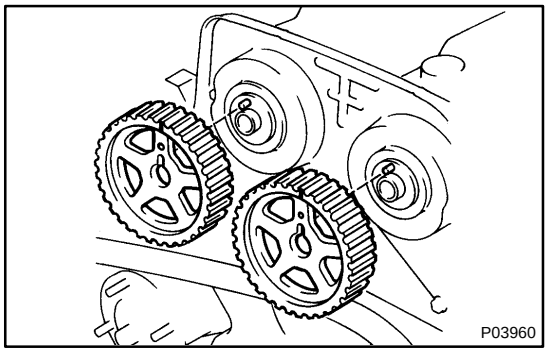

6. INSTALL CAMSHAFT TIMING PULLEYS

(a) Align the camshaft knock pin with the groove in the pulley, and slide on the pulley.
(b) Temporarily install the timing pulley bolt.

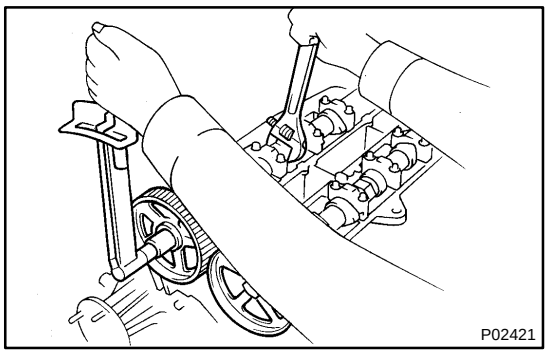

(c) Hold the hexagon portion of the camshaft with a wrench, and tighten the timing pulley bolt.
Torque: 81 N·m (810 kgf·cm, 60 ft·lbf)

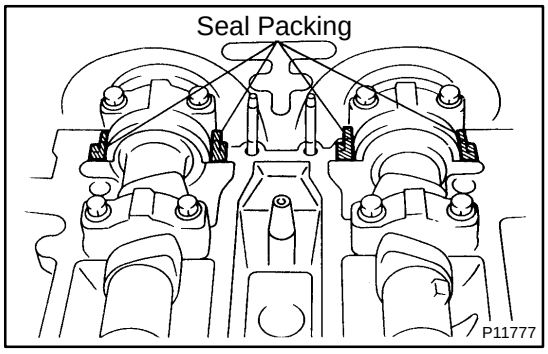

7. INSTALL NO.1 AND NO.2 CYLINDER HEAD COVERS

(a) Remove any old packing (FIPG) material.
(b) Apply seal packing to the cylinder head as shown in the illustration.
Seal packing: Part No. 08826-00080 or equivalent
(c) Install the gaskets to the No.1 and No.2 cylinder head covers.
(d) Install the seal washers to the mounting bolts.
(e) Install the No.1 cylinder head cover with the 4 seal washers and 4 bolts.
Torque: 5.5 N·m (55 kgf·cm, 49 in.·lbf)
(f) Install the No.2 cylinder head cover with the 4 seal washers and 4 bolts.
Torque: 5.5 N·m (55 kgf·cm, 49 in.·lbf)
(g) Install the PCV valve.
(h) Install the cruise control actuator cable bracket and IAC valve pipe clamp with the 2 bolts.

8. INSTALL SPARK PLUGS

9. INSTALL IGNITION COILS ASSEMBLIES (See page IG-7)

10. INSTALL TIMING BELT (See page EM-21)

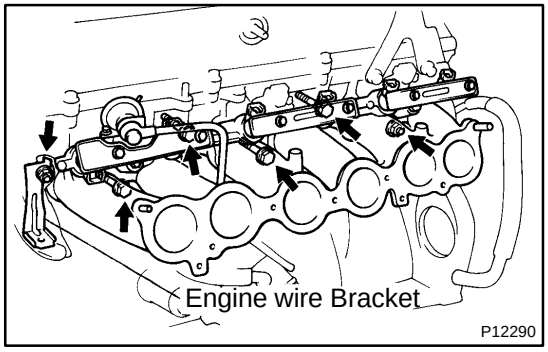

11. INSTALL INTAKE MANIFOLD AND DELIVERY PIPE ASSEMBLY

Install a new gasket, the intake manifold, delivery pipe assembly and engine wire bracket with the 4 bolts and 2 nuts.
Torque: 27 N·m (280 kgf·cm, 20 ft·lbf)

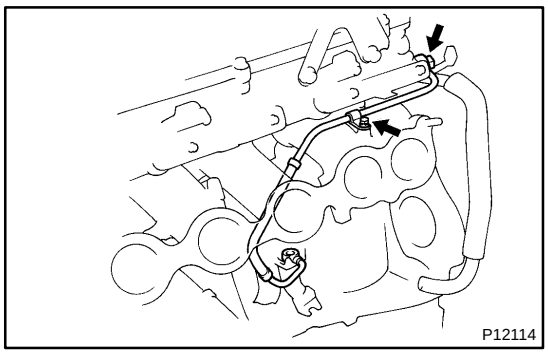

12. INSTALL FUEL INLET PIPE

(a) Connect the fuel inlet pipe with 2 new gaskets and the union bolt.
Torque: 42 N·m (420 kgf·cm, 30 ft·lbf)

(b) Install the clamp bolt to the intake manifold.

13. INSTALL FUEL PRESSURE PULSATION DAMPER
(See page SF-32)

14. INSTALL PRESSURE TANK AND VSV ASSEMBLY
Torque: 21 N·m (210 kgf·cm, 15 ft·lbf)

15. CONNECT ENGINE WIRE

(a) Install the engine wire protector to the intake manifold with the nut.

(b) Install the 2 ground straps to the intake manifold with the bolts.

(c) Connect these connectors and clamps:
- VSV connector for EVAP
- 6 injectors connectors

HINT:
The No.1, No.3 and No.5 injector connectors are dark gray, and the No.2, No.4 and No.6 injector connectors are gray.
- 2 camshaft position sensor connectors
- 3 engine wire clamps to injector holders

16. INSTALL AIR INTAKE CHAMBER ASSEMBLY
(See page SF-29)

17. CONNECT FUEL RETURN HOSE

18. INSTALL PS PUMP
Torque: 58 N·m (590 kgf·cm, 43 ft·lbf)

19. INSTALL NO.1 WATER BYPASS PIPE AND WATER OUTLET

(a) Install 2 new O-rings to the No.1 water bypass pipe.

(b) Apply soapy water to the O-rings.

(c) Install the No.1 water bypass pipe to the water pump.

(d) Install a new gasket and the water outlet with the 2 bolts.
Torque: 21 N·m (210 kgf·cm, 15 ft·lbf)

(e) Connect the ECT sensor and sender gauge connectors.

(f) Connect the upper radiator hose to the water outlet.

20. INSTALL DRIVE BELT

Install the drive belt by turning the drive belt tensioner clockwise.

21. M/T:
INSTALL DRIVE BELT TENSIONER DAMPER
(See page EM-21)

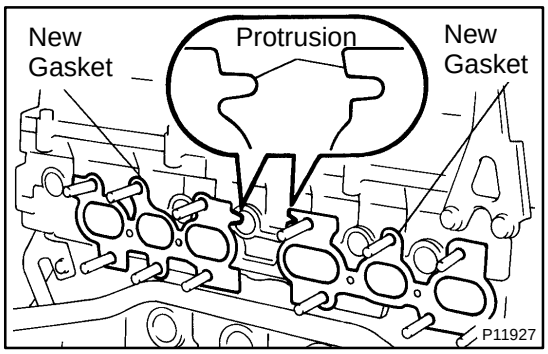

22. INSTALL EXHAUST MANIFOLD

(a) Place 2 new gaskets to the cylinder head facing the protrusion as shown.

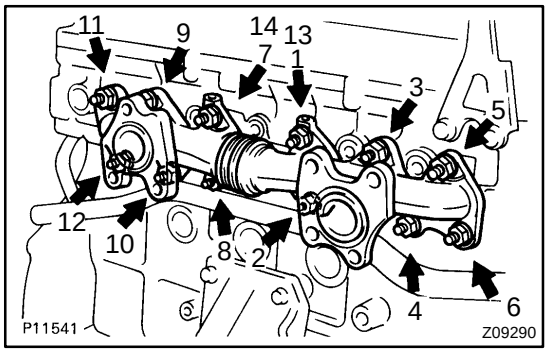

(b) Install the exhaust manifold with 12 new nuts, in several passes, in the sequence shown.

Torque: 39 N·m (400 kgf·cm, 29 ft·lbf)

23. INSTALL TURBOCHARGER (See page TC-20)

ENGINE UNIT

COMPONENTS

EM0AU-03

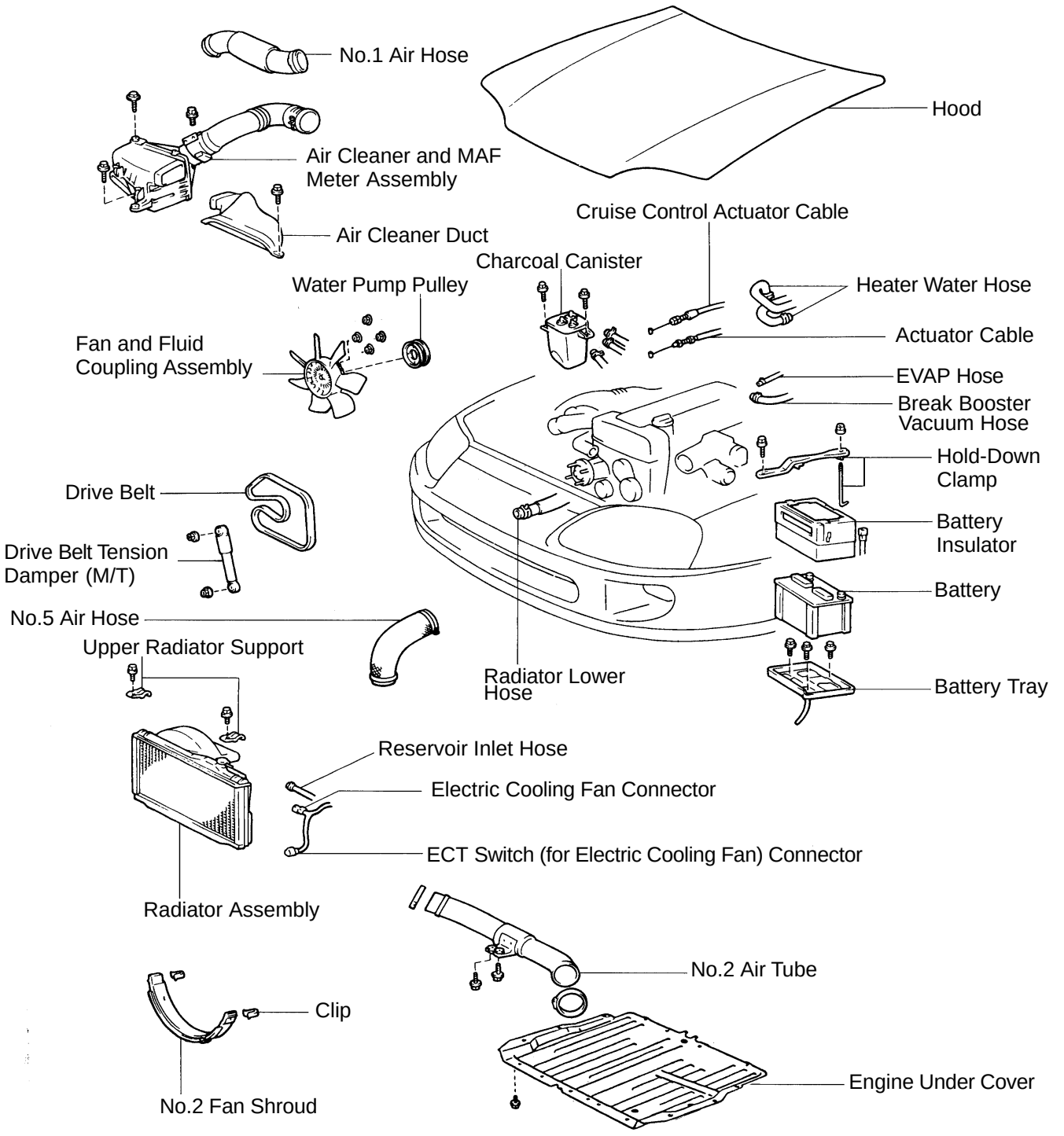

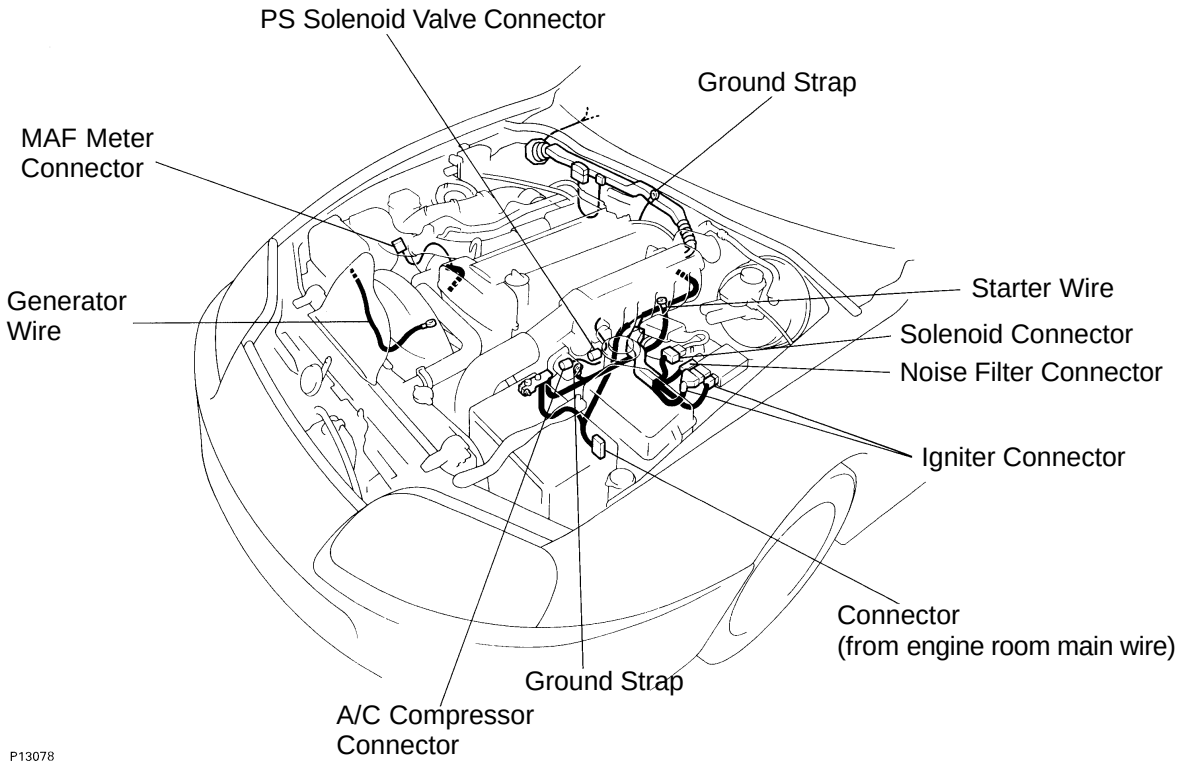
PS Solenoid Valve Connector
Ground Strap
MAF Meter Connector
Generator Wire
Starter Wire
Solenoid Connector
Noise Filter Connector
Igniter Connector
Connector (from engine room main wire)
Ground Strap
A/C Compressor Connector
P13078

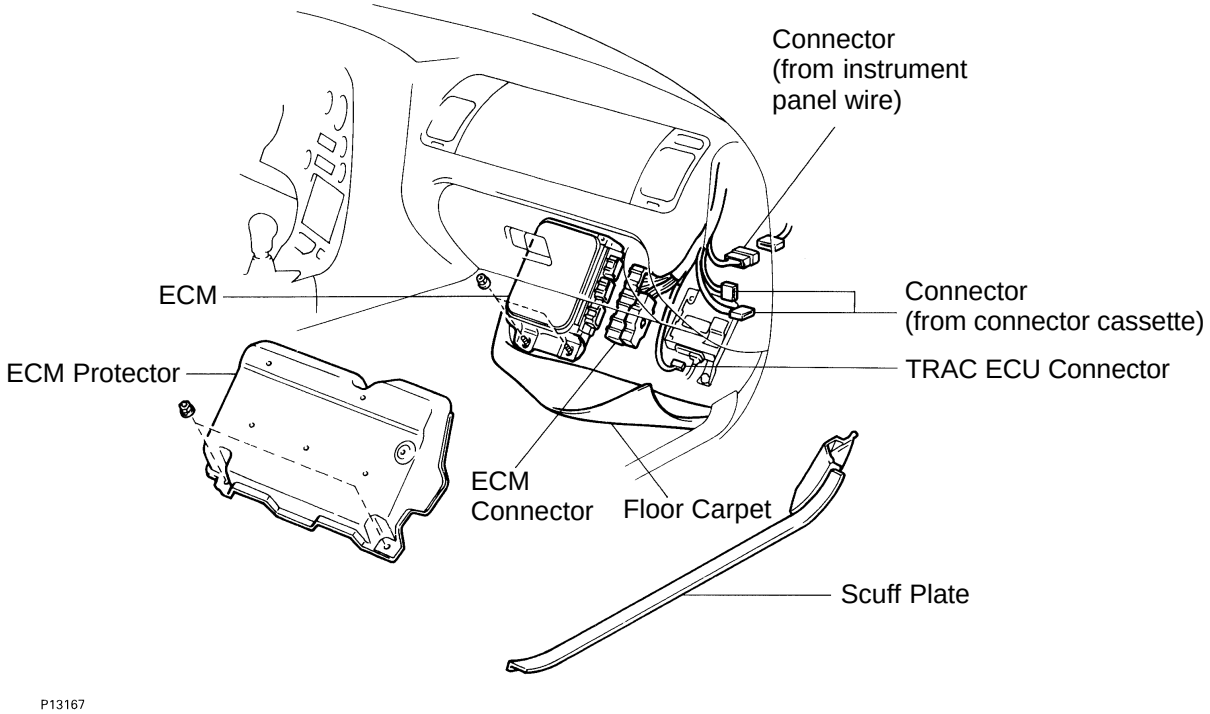
Connector (from instrument panel wire)
ECM
Connector (from connector cassette)
ECM Protector
TRAC ECU Connector
ECM Connector
Floor Carpet
Scuff Plate
P13167

Z16797

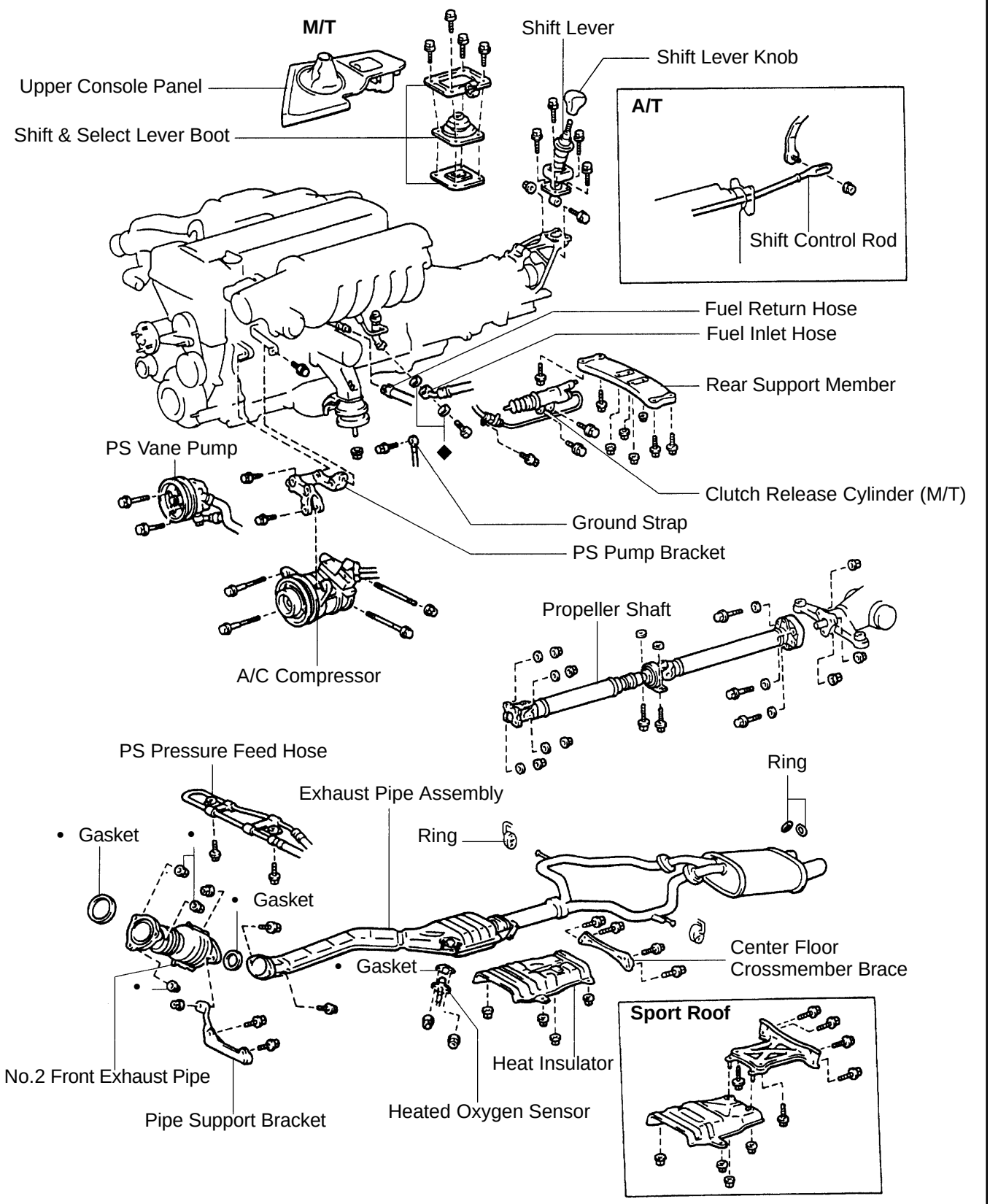

• Non-reusable part

S00926

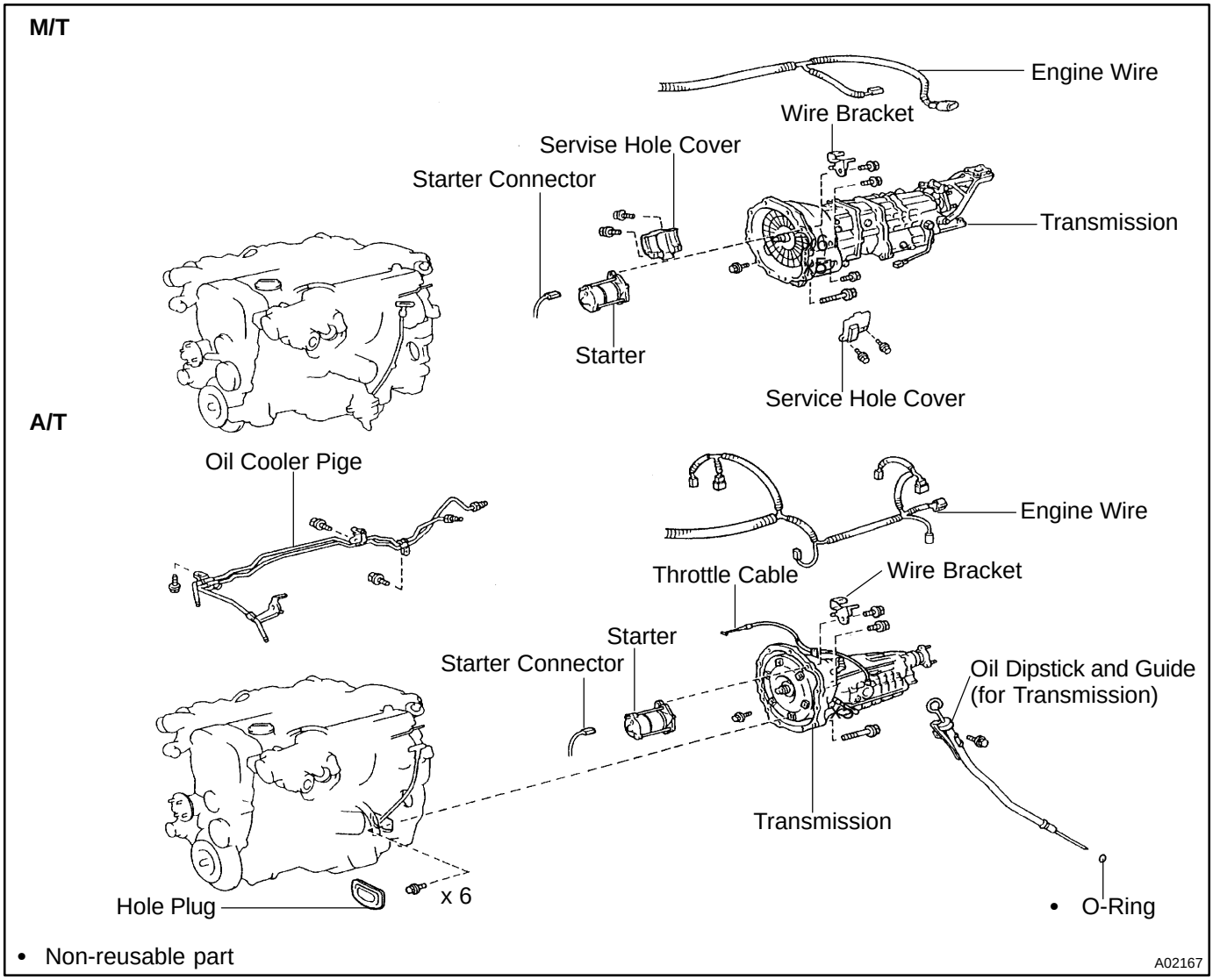
M/T
Engine Wire
Wire Bracket
Servise Hole Cover
Starter Connector
Transmission
Starter
Service Hole Cover
A/T
Oil Cooler Pige
Engine Wire
Throttle Cable
Wire Bracket
Starter
Starter Connector
Oil Dipstick and Guide
(for Transmission)
Transmission
Hole Plug
x 6
• O-Ring
• Non-reusable part
A02167

REMOVAL

1. REMOVE HOOD

2. REMOVE RADIATOR ASSEMBLY
(See page CO-22)

3. DRAIN ENGINE OIL EM0AV-02

4. DRAIN FUEL FROM FUEL TANK

5. REMOVE NO.1 AIR HOSE

6. DISCONNECT CONTROL CABLES FROM THROTTLE BODY

Disconnect these cables:

- Accelerator cable
- Cruise control actuator cable

7. REMOVE AIR CLEANER AND MAF METER ASSEMBLY

(a) Remove the 3 bolts.

(b) Loosen the hose clamp, disconnect the air hose from the intake air connector.

(c) Disconnect the MAF meter wire from the clamp on the air cleaner case.

(d) Disconnect the MAF meter connector, and remove the air cleaner and MAF meter assembly.

8. M/T:
REMOVE DRIVE BELT TENSIONER DAMPER
(See page EM-15)

9. REMOVE DRIVE BELT, FAN, FLUID COUPLING ASSEMBLY AND WATER PUMP PULLEY
(See page CO-7)

10. REMOVE CHARCOAL CANISTER

11. DISCONNECT HEATER WATER HOSES

12. DISCONNECT BRAKE BOOSTER VACUUM HOSE

13. DISCONNECT EVAP HOSE

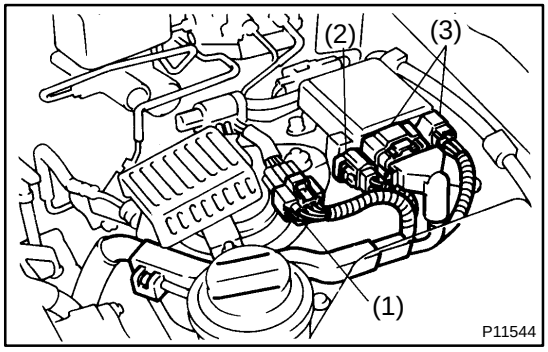

14. DISCONNECT WIRES AND CONNECTORS

(a) Disconnect these connectors:
(1) Solenoid resistor connector
(2) Noise filter connector
(3) Igniter connectors

(b) Disconnect the engine wire from the PS oil reservoir protector
.

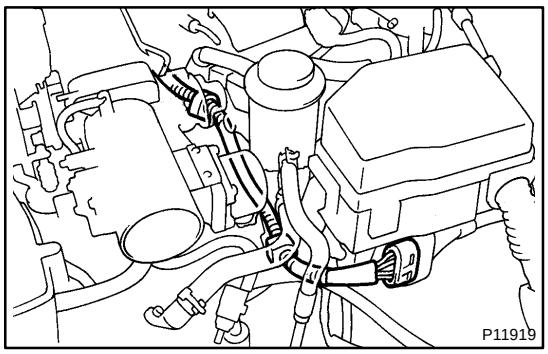

(c) Disconnect the connector from the engine room main wire.
(d) Disconnect the engine wire from the 2 wire clamps.
(e) Remove the rubber cap and nut, and disconnect the generator wire.
(f) Disconnect the wire clamp and PS solenoid valve connector.
(g) Remove the bolt and disconnect the ground strap from the cylinder block.

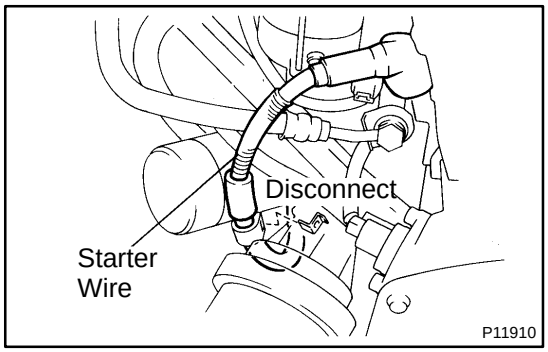

(h) Disconnect the starter wire from the LH engine mounting bracket.
(i) Remove the rubber cap and nut, and disconnect the starter wire.

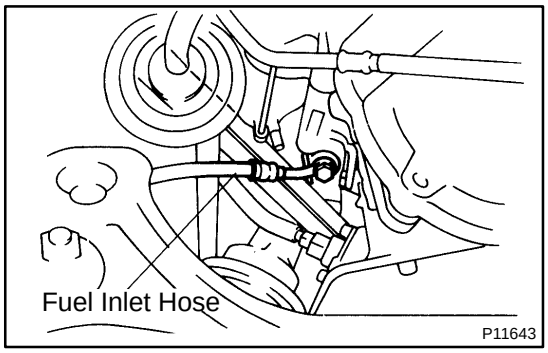

15. DISCONNECT FUEL HOSES

(a) Remove the union bolt and 2 gaskets, and disconnect the fuel inlet hose.

HINT:

- Put a suitable container or shop rag under the fuel pipe support.
- Slowly loosen the union bolt.

(b) Suspend the hose union end upward.

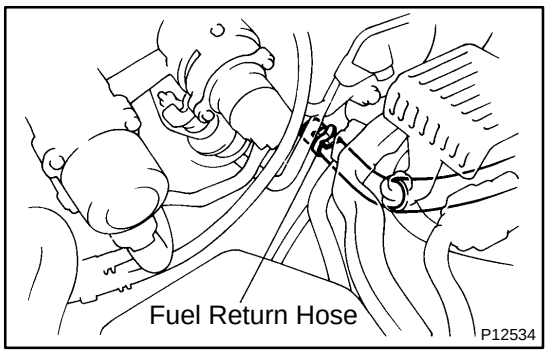

(c) Disconnect the fuel return hose from the clamp of the dipstick guide.
(d) Disconnect the fuel return hose from the fuel return pipe. Plug the hose end.

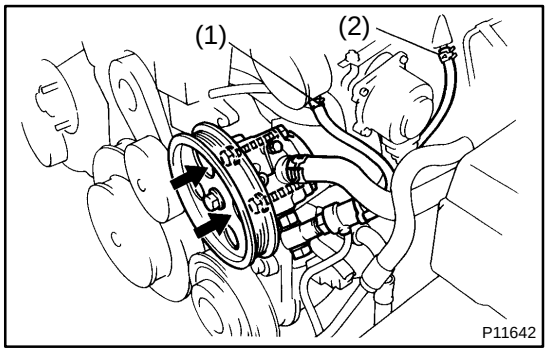

16. DISCONNECT PS PUMP WITHOUT DISCONNECTING HOSES

(a) Disconnect these hoses:
  (1) PS air hose from throttle body
  (2) PS air hose from air intake chamber
(b) Remove the 2 bolts, and disconnect the vane pump from the pump bracket.

HINT:

Put aside the vane pump, and suspend it securely.

(c) Remove the 3 bolts and pump bracket.

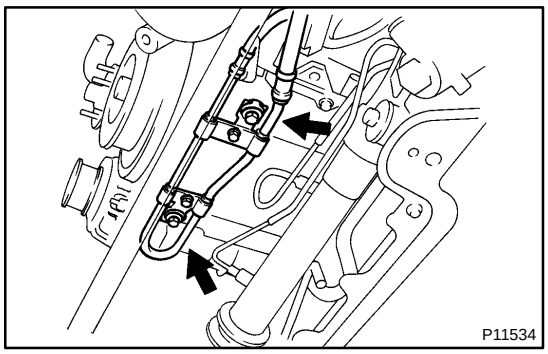

17. DISCONNECT PS PRESSURE FEED HOSE FROM ENGINE

Remove the 2 clamp bolts and disconnect the pressure feed hose.

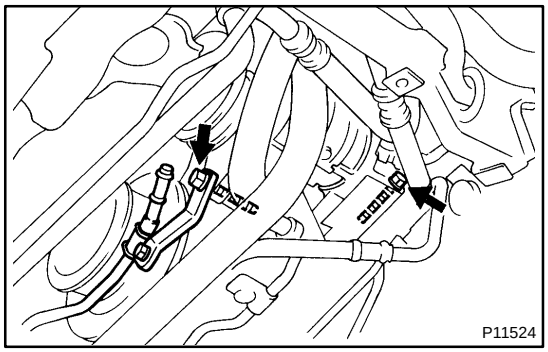

18. DISCONNECT A/C COMPRESSOR WITHOUT DISCONNECTING HOSES

(a) Remove the 2 bolts.

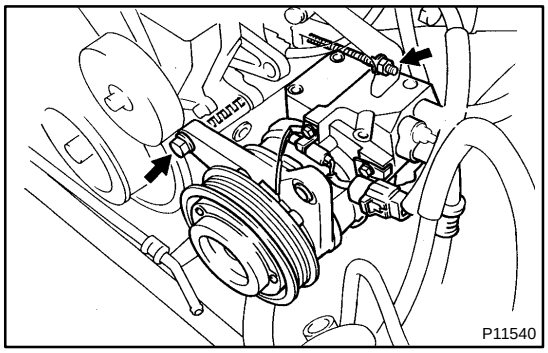

(b) Disconnect the compressor connector.
(c) Remove the bolt and nut.
(d) Using a torx socket (E10), remove the stud bolt, and disconnect the compressor from the engine.

HINT:
Put aside the compressor, and suspend it securely.

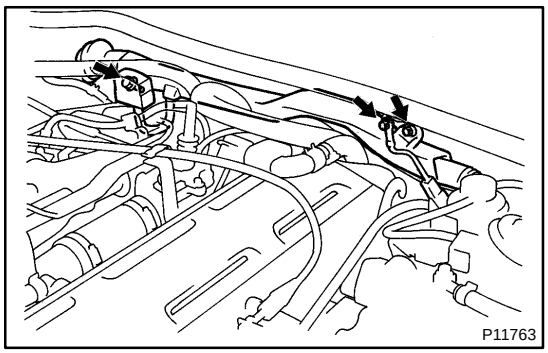

19. DISCONNECT ENGINE WIRE FROM COWL PANEL

(a) Remove the bolt, and disconnect the ground strap.
(b) Remove the 2 bolts, and disconnect the engine wire protector.

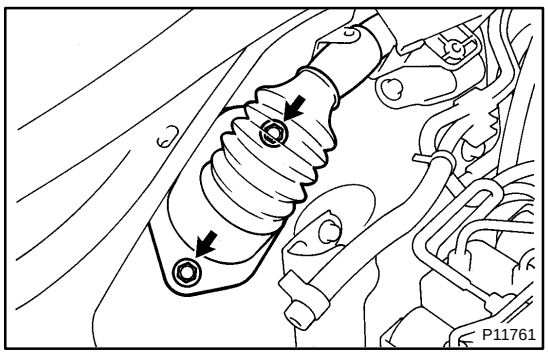

(c) Remove the 2 bolts holding the engine wire retainer to the cowl panel.

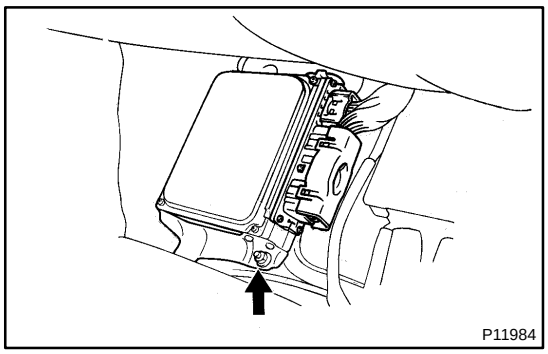

20. DISCONNECT ENGINE WIRE FROM CABIN

(a) Remove the scuff plate.
(b) Take out the front side of the floor carpet.
(c) Remove the 2 nuts and ECM protector.
(d) Remove the nut, and disconnect the ECM from the floor panel.

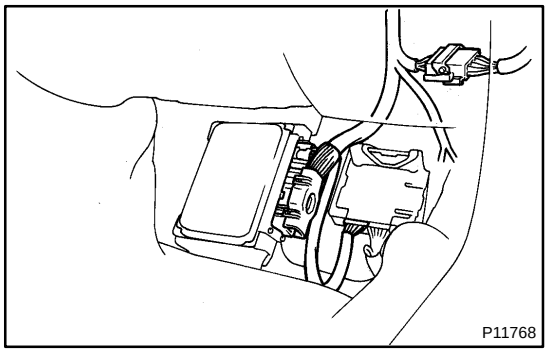

(e) Disconnect the 2 connectors from the ECM.
(f) Disconnect the connector from the TRAC ECU.
(g) Disconnect the connector from the instrument panel wire.
(h) Disconnect the 2 connectors from the connector cassette.
(i) Pull out the engine wire from the cabin.

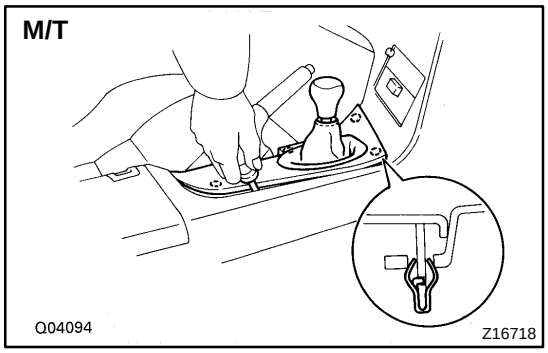

21. M/T:
REMOVE UPPER CONSOLE PANEL, SHIFT LEVER BOOTS AND HOLDING BOLTS

(a) Remove the shift lever knob.
(b) Using a screwdriver, pry out the upper console panel.

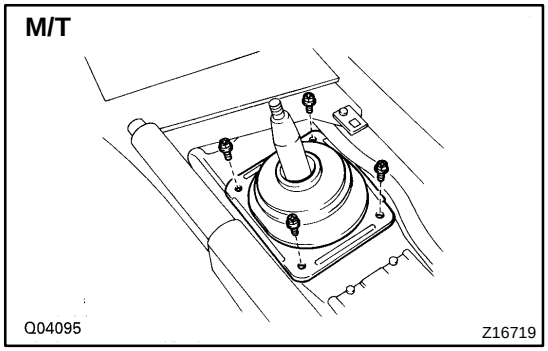

(c) Remove the 4 bolts holding the lever boot to the transmission cover.
(d) Remove the shift & select lever boots.
(e) Remove the 4 bolts holding the shift lever to the shift lever retainer.

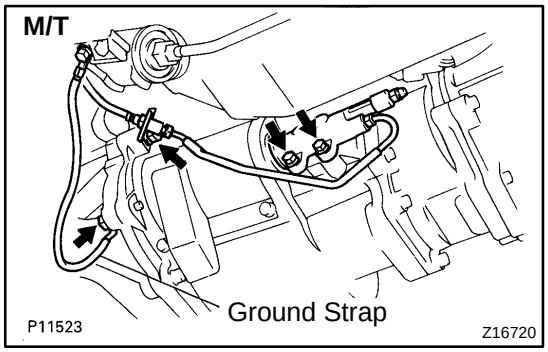

22. M/T:
DISCONNECT CLUTCH RELEASE CYLINDER AND GROUND STRAP FROM TRANSMISSION

(a) Remove the 2 bolts, and disconnect clutch release cylinder.
(b) Remove the bolt, and disconnect the clutch line tube.
(c) Remove the bolt, and disconnect ground strap.

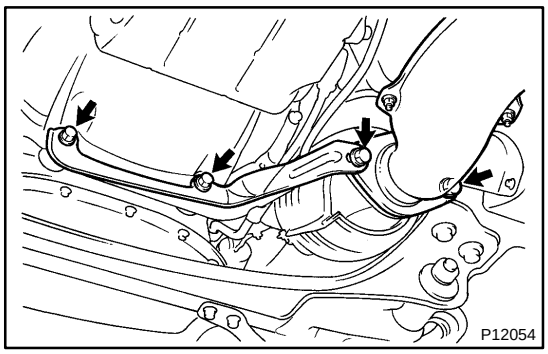

23. PDISCONNECT HEATED OXYGEN SENSOR FROM FRONT EXHAUST PIPE

Remove the 2 nuts, and disconnect oxygen sensor and gasket.

24. REMOVE EXHAUST PIPE ASSEMBLY

(a) Remove the 2 bolts and nuts holding the front exhaust pipe to the No.2 front exhaust pipe.
(b) Remove the 2 bolts and pipe support bracket.
(c) Remove the gasket, and disconnect the front exhaust pipe.

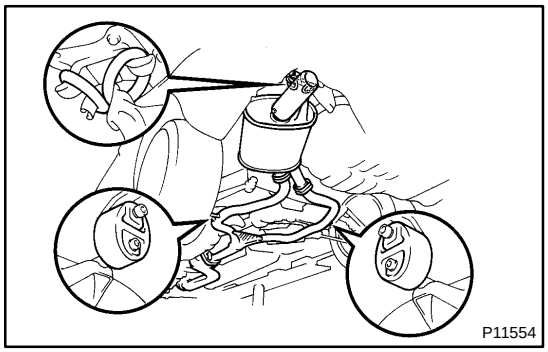

(d) Disconnect the hook of the tailpipe from the 2 rings.
(e) Disconnect the 2 rings on the exhaust pipe from the exhaust pipe brackets, and remove the exhaust pipe assembly.

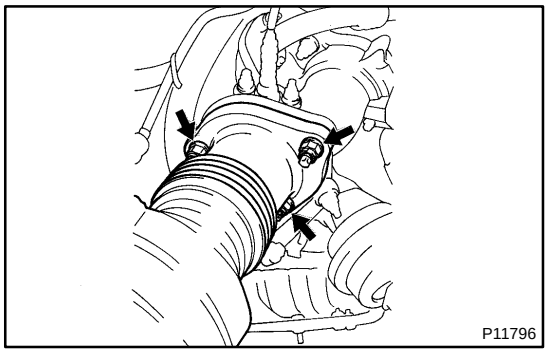

25. REMOVE NO.2 FRONT EXHAUST PIPE

Remove the 3 nuts, front exhaust pipe and gasket.

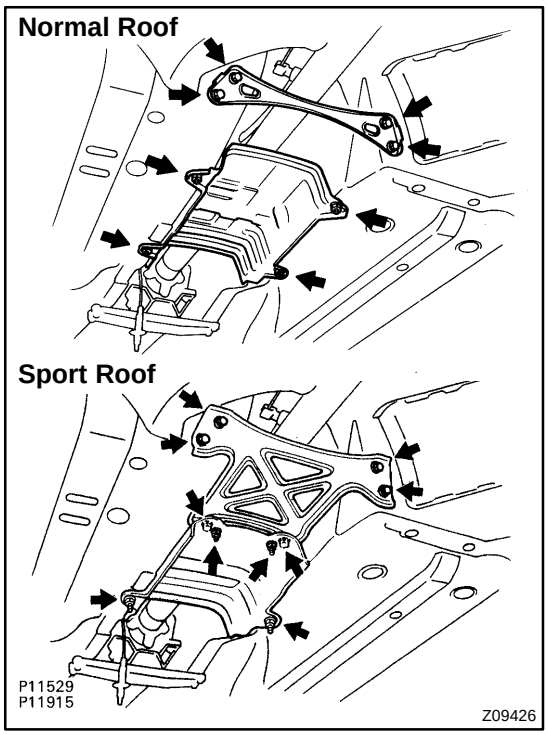

26. REMOVE EXHAUST PIPE HEAT INSULATOR

Remove the 4 nuts and heat insulator.

27. REMOVE REAR CENTER FLOOR CROSSMEMBER BRACE

Remove the 4 bolts (Normal roof) or 6 bolts (Sport roof) and crossmember brace.

28. REMOVE PROPELLER SHAFT

(See page PR-4)

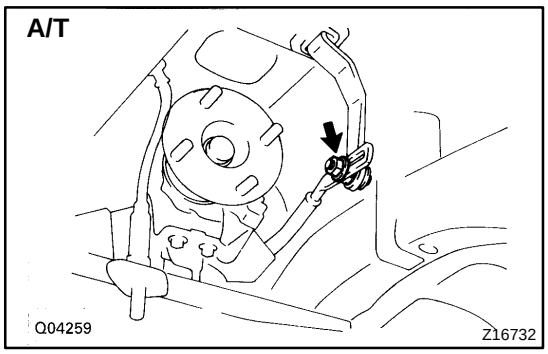

29. A/T:
DISCONNECT TRANSMISSION CONTROL ROD

Remove the nut, and disconnect the control rod from the shift lever.

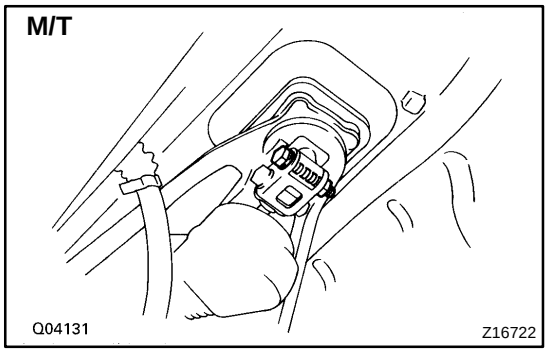

30. M/T:
REMOVE TRANSMISSION SHIFT LEVER

(a) Remove the bolt and nut.
(b) Remove the transmission shift lever, inside of vehicle.

31. PLACE JACK UNDER TRANSMISSION

NOTICE:

Be sure to put a wooden block between the jack and the transmission oil pan to prevent damage (A/T).

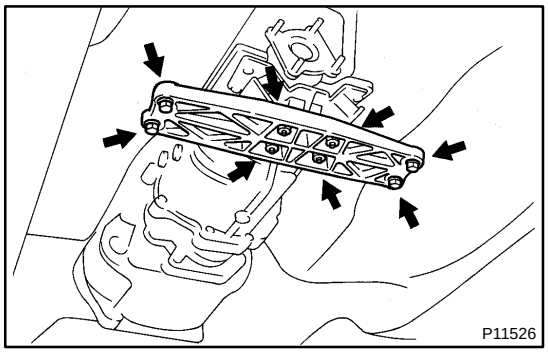

32. REMOVE REAR SUPPORT MEMBER

(a) Remove the 4 nuts holding the member to the engine rear mounting insulator.
(b) Remove the 4 bolts and rear support member.

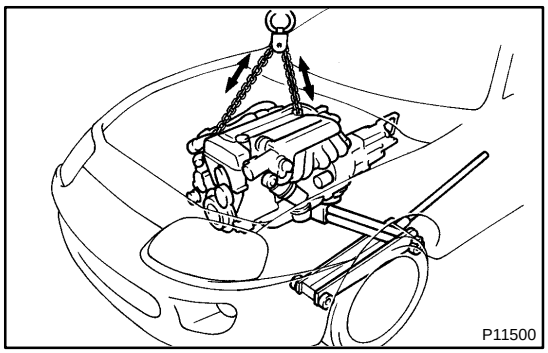

33. REMOVE ENGINE AND TRANSMISSION ASSEMBLY FROM VEHICLE

(a) Attach the engine hoist chain to the 2 engine hangers.

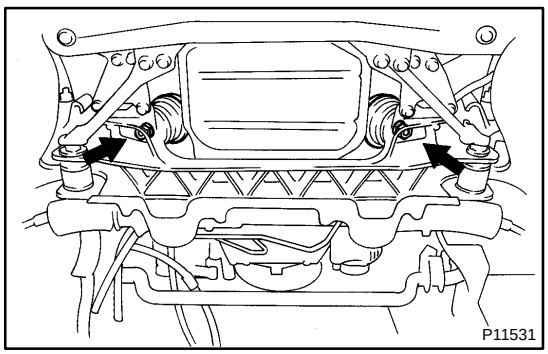

(b) Remove the 2 nuts holding the engine front mounting insulators to the front suspension crossmember.

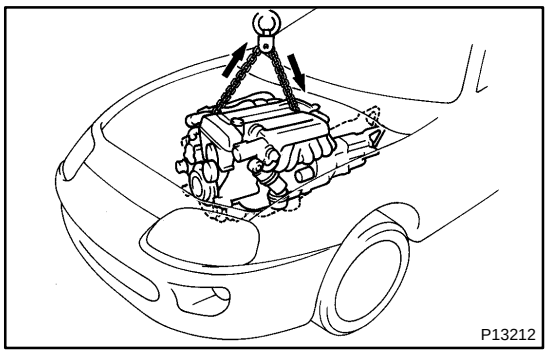

(c) Lift the engine out of the vehicle slowly and carefully.

NOTICE:

Remove the engine and transmission assembly carefully without damaging the shift lever retainer (M/T), A/C compressor or PS solenoid valve.

(d) Make sure the engine is clear of all wiring, hoses and cables.

(e) Place the engine and transmission assembly onto the stand.

34. A/T:

REMOVE OIL DIPSTICK AND GUIDE FOR TRANSMISSION

(a) Remove the bolt.

(b) Pull out the dipstick and guide from the transmission.

(c) Remove the O-ring from the dipstick guide.

35. DISCONNECT ENGINE WIRE FROM TRANSMISSION

(a) Disconnect the connectors.

(b) Disconnect the wire clamps from the brackets.

36. REMOVE STARTER

(a) Disconnect the starter connector.

(b) Remove the 2 bolts, wire bracket and starter.

37. A/T:

REMOVE OIL COOLER TUBES FOR TRANSMISSION

(a) Remove the 2 hose clamp bolts and tube clamp bolt.

(b) Loosen the 2 union nuts, and remove the oil cooler tubes.

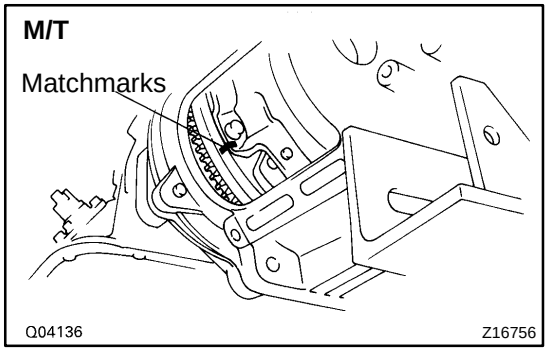

38. M/T:

REMOVE CLUTCH COVER SET BOLTS

(a) Remove the 2 bolts and service hole cover.

(b) Place the matchmarks on the flywheel and clutch cover.

(c) Remove the 6 bolts.

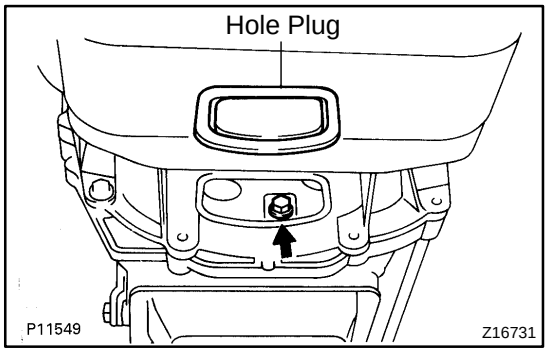

39. A/T:

REMOVE TORQUE CONVERTER CLUTCH MOUNTING BOLTS

(a) Remove the hole plug.

(b) Turn the crankshaft to gain access to each bolt. Remove the 6 bolts.

40. SEPARATE ENGINE AND TRANSMISSION

Remove the 6 bolts and transmission.

EM0AW-03

INSTALLATION

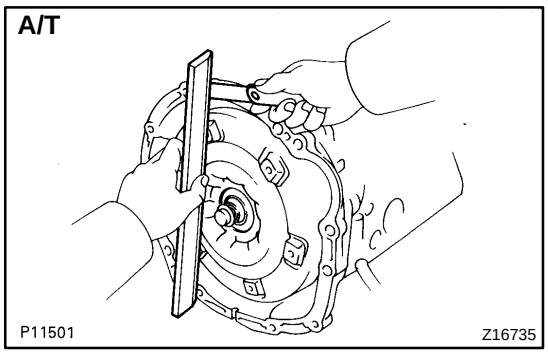

1. A/T:

CHECK TORQUE CONVERTER CLUTCH INSTALLATION

Using calipers and straight edge, measure from the installed surface of the torque converter clutch to the front surface of the transmission.

Correct distance: Less than 0.1 mm (0.004 in.)

If the distance is not as specified, check for an improper installation.

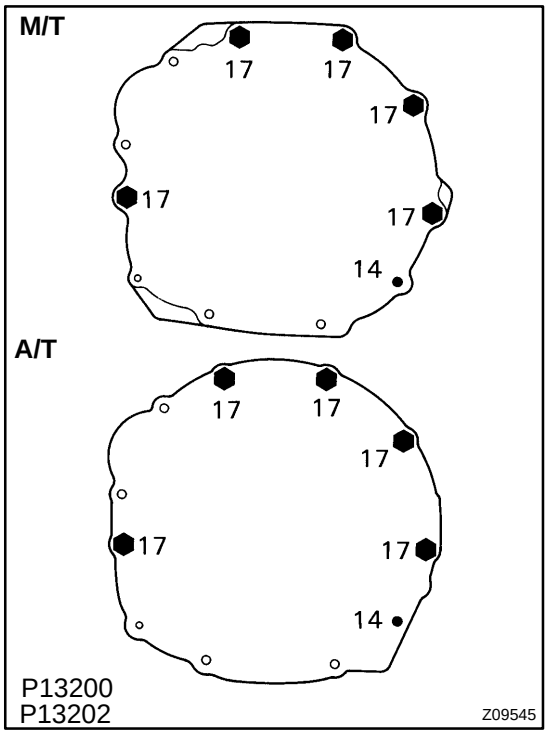

2. ASSEMBLE ENGINE AND TRANSMISSION

(a) M/T:

Align the input spline with the clutch disc and install the transmission to the engine.

(b) Align the 2 knock pins on the cylinder block with the pin holes of the clutch housing.

(c) Install the transmission with the 6 bolts.

Torque:

14 mm head 39 N·m (400 kgf·cm, 29 ft·lbf)

17 mm head 72 N·m (730 kgf·cm, 43 ft·lbf)

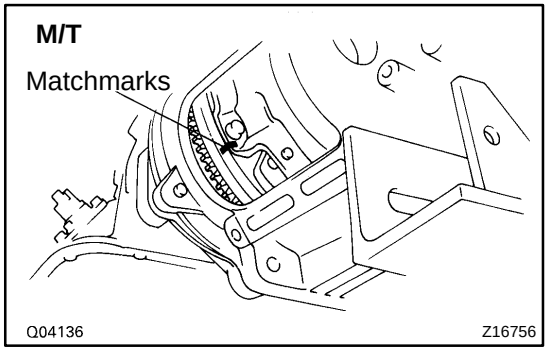

3. M/T:

INSTALL CLUTCH COVER SET BOLTS

(a) Align the matchmarks.

(b) Install the 6 bolts while turning the crankshaft to gain access. Tighten the bolts evenly.

Torque: 19 N·m (195 kgf·cm, 14 ft·lbf)

(c) Install the service hole cover with the 2 bolts.

Torque: 12 N·m (120 kgf·cm, 9 ft·lbf)

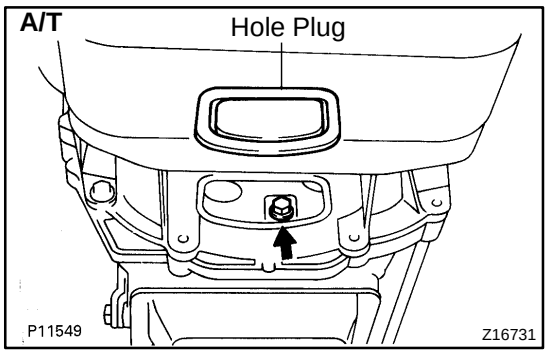

4. A/T:
INSTALL TORQUE CONVERTER CLUTCH MOUNTING BOLTS

(a) First, install the gray bolt. Then install 5 black bolts while turning the crankshaft to gain access. Tighten the bolts evenly.
Torque: 33 N·m (340 kgf·cm, 25 ft·lbf)

(b) Install the hole plug.

5. A/T:
INSTALL OIL COOLER PIPE FOR TRANSMISSION

(a) Temporarily install the 2 oil cooler pipe, 2 hose clamps and tube clamp with 3 clamp bolts.

(b) Connect the 2 oil cooler tubes to the unions on the transmission. Tighten the union nuts.
Torque:44 N·m (450 kgf·cm, 33 ft·lbf)

(c) Tighten the 3 clamp bolts.

6. INSTALL STARTER

7. CONNECT ENGINE WIRE TO TRANSMISSION

8. A/T:
INSTALL OIL DIPSTICK AND GUIDE FOR TRANSMISSION

(a) Install a new O-ring to the dipstick guide.

(b) Connect the dipstick guide end to the dipstick tube of the oil pan.

(c) Install the dipstick guide with the bolt.

(d) Install the dipstick.

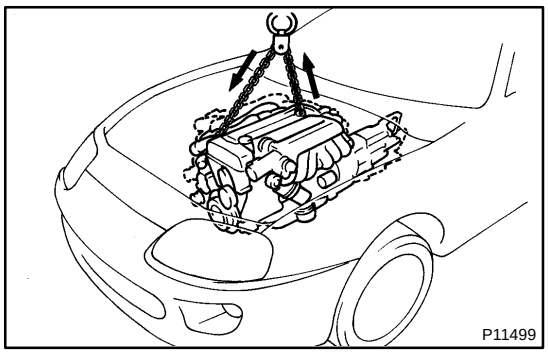

9. INSTALL ENGINE AND TRANSMISSION ASSEMBLY IN VEHICLE

(a) Attach the engine hoist chain to the engine hangers.

(b) Lower the engine and transmission assembly into the engine compartment.

NOTICE:
Install the engine and transmission assembly carefully without damaging the shift lever retainer (M/T), A/C compressor and PS solenoid valve.

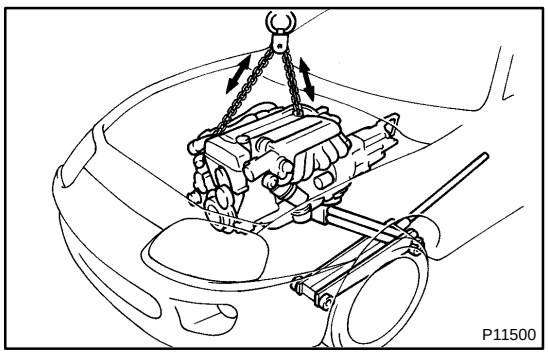

(c) Insert the stud bolts of the front engine mounting insulators into the stud bolt holes of the front suspension crossmember.

(d) Temporarily install the 2 nuts holding the engine front mounting insulators to the front suspension crossmember.

(e) Keep the engine level with a jack.

(f) Remove the hoist chain.

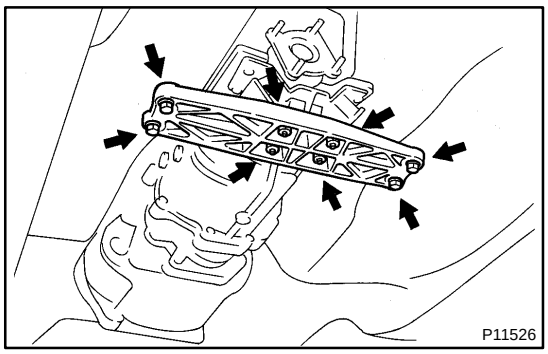

(g) Temporarily install the support member to the engine rear mounting insulator with the 4 nuts.
(h) Install the 4 bolts holding the support member to the body.
Torque: 25.5 N·m (260 kgf·cm, 19 ft·lbf)
(i) Tighten the 4 nuts holding the support member to the engine rear mounting insulator.
Torque: 13 N·m (135 kgf·cm, 10 ft·lbf)

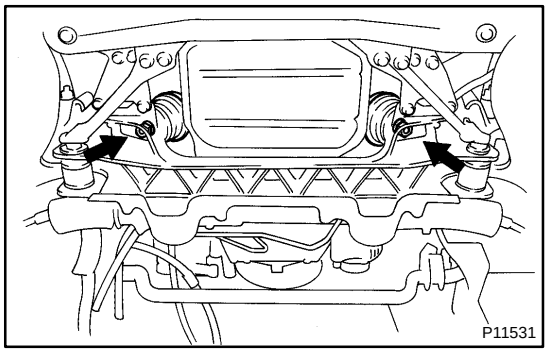

(j) Tighten the 2 nuts holding the engine front mounting insulators to the front suspension crossmember.
Torque:Torque: 59 N·m (600 kgf·cm, 43 ft·lbf)

10. M/T:
INSTALL TRANSMISSION SHIFT LEVER
Torque: 19 N·m (195 kgf·cm, 14 ft·lbf)

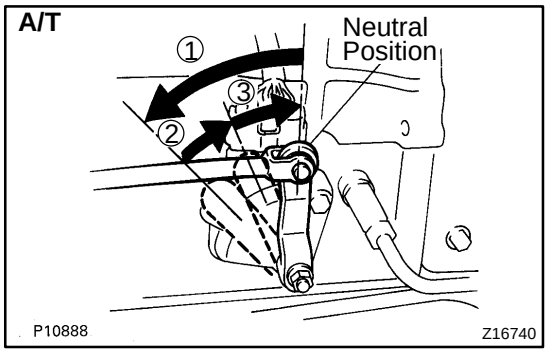

11. A/T:
CONNECT TRANSMISSION CONTROL ROD
(a) Shift the shift lever to N position.
(b) Fully turn the control shaft lever back and return 2 notches. It is now in neutral position.
(c) Connect the control rod to the shift lever with the nut.
Torque: 13 N·m (130 kgf·cm, 9 ft·lbf)

12. INSTALL PROPELLER SHAFT
(See page PR-1 1)

13. INSTALL REAR CENTER FLOOR CROSSMEMBER BRACE
Torque: 28 N·m (290 kgf·cm, 21 ft·lbf)

14. INSTALL EXHAUST PIPE HEAT INSULATOR

15. INSTALL NO.2 FRONT EXHAUST PIPE
Install a new gasket and the front exhaust pipe with 3 new nuts.
Torque: 62 N·m (630 kgf·cm, 46 ft·lbf)

16. INSTALL EXHAUST PIPE ASSEMBLY
(a) Install the hook of the tailpipe to the 2 rings on the tailpipe bracket.
(b) Install the hook of the exhaust pipe to the 2 rings on the exhaust pipe brackets.
(c) Install the pipe support bracket with the 2 bolts.
Torque: 43 N·m (440 kgf·cm, 32 ft·lbf)
(d) Install a new gasket and the No.2 front exhaust pipe to the front exhaust pipe with the 2 bolts and 2 new nuts.
Torque: 58 N·m (590 kgf·cm, 43 ft·lbf)

17. INSTALL HEATED OXYGEN SENSOR

Install a new gasket, the oxygen sensor and sensor cover with the 2 nuts.

Torque: 20 N·m (200 kgf·cm, 14 ft·lbf)

18. M/T:

INSTALL CLUTCH RELEASE CYLINDER AND GROUND STRAP

(a) Install the clutch release cylinder with the 2 bolts.
Torque: 13 N·m (130 kgf·cm, 9 ft·lbf)

(b) Connect the clutch line tube with the bolt.
Torque: 37 N·m (380 kgf·cm, 27 ft·lbf)

(c) Install the ground strap with the bolt.
Torque: 37 N·m (380 kgf·cm, 27 ft·lbf)

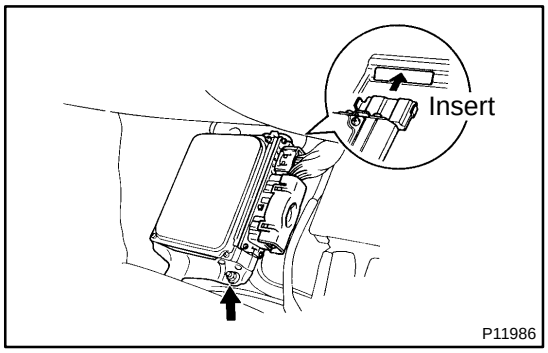

19. CONNECT ENGINE WIRE TO CABIN

(a) Push in the engine wire through the cowl panel.

NOTICE:

Be careful not to damage the engine wire.

(b) Connect the 2 connectors to the connector cassette.

(c) Connect the connector to the instrument panel wire connector.

(d) Connect the 2 connectors to the ECM.

(e) Connect the connector to the TRAC ECU.

(f) Insert the ECM bracket into the stay on the floor panel.

(g) Install the ECM with the nut.

(h) Install the ECM protector with the 2 nuts.

(i) Install the floor carpet.

(j) Install the scuff plate.

20. M/T:

INSTALL UPPER CONSOLE PANEL, SHIFT LEVER BOOTS AND HOLDING BOLTS

21. CONNECT ENGINE WIRE TO COWL PANEL

22. INSTALL A/C COMPRESSOR

(a) Using a torx socket (E10), install the stud bolt and compressor.
Torque: 26 N·m (265 kgf·cm, 19 ft·lbf)

(b) Connect the compressor connector.

(c) Temporarily install the compressor with nut and 3 bolts.

(d) Alternately tighten the bolt and nut.
Torque: 52 N·m (530 kgf·cm, 38 ft·lbf)

23. INSTALL PS PRESSURE FEED HOSE

Install the pressure feed hose with the 2 clamp bolts.

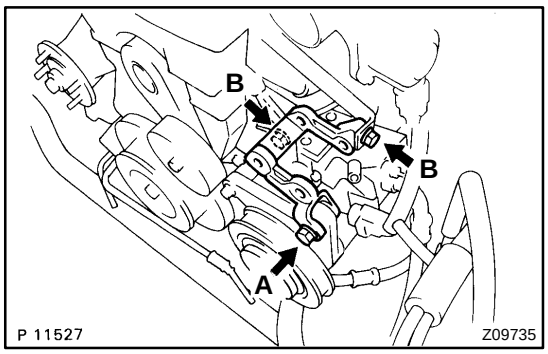

24. INSTALL PS PUMP

(a) Install the pump bracket with the 3 bolts.

Torque:
A 58 N·m (590 kgf·cm, 43 ft·lbf)
B 39 N·m (400 kgf·cm, 29 ft·lbf)

(b) Install the vane pump with the 2 bolts.

Torque: 58 N·m (590 kgf·cm, 43 ft·lbf)

(c) Connect these hoses:

- PS air hose to throttle body
- PS air hose to air intake chamber

25. CONNECT FUEL HOSES

(a) Connect the fuel return hose to the fuel return pipe.

(b) Install the fuel return hose to the clamp of the dipstick guide.

(c) Install the fuel inlet hose with 2 new gaskets and the union bolt.

Torque: 29 N·m (300 kgf·cm, 22 ft·lbf)

26. CONNECT WIRES AND CONNECTORS

27. CONNECT EVAP HOSE

28. CONNECT BRAKE BOOSTER VACUUM HOSE

29. CONNECT HEATER WATER HOSES

30. INSTALL CHARCOAL CANISTER

31. INSTALL WATER PUMP PULLEY, FAN, FLUID COUPLING ASSEMBLY AND DRIVE BELT
(See page CO-11)

32. M/T:
INSTALL DRIVE BELT TENSIONER DAMPER
(See page EM-21)

33. INSTALL AIR CLEANER AND MAF METER ASSEMBLY

34. INSTALL NO.1 AIR HOSE

35. CONNECT CONTROL CABLES TO THROTTLE BODY

36. FILL WITH ENGINE OIL

37. INSTALL RADIATOR ASSEMBLY
(See page CO-28)

38. START ENGINE AND CHECK FOR LEAKS

39. INSTALL HOOD

40. ROAD TEST

Check for abnormal noise, shock slippage, correct shift points and smooth operation.

41. RECHECK ENGINE COOLANT AND ENGINE OIL LEVELS

CYLINDER BLOCK

COMPONENTS

EM0AN-03

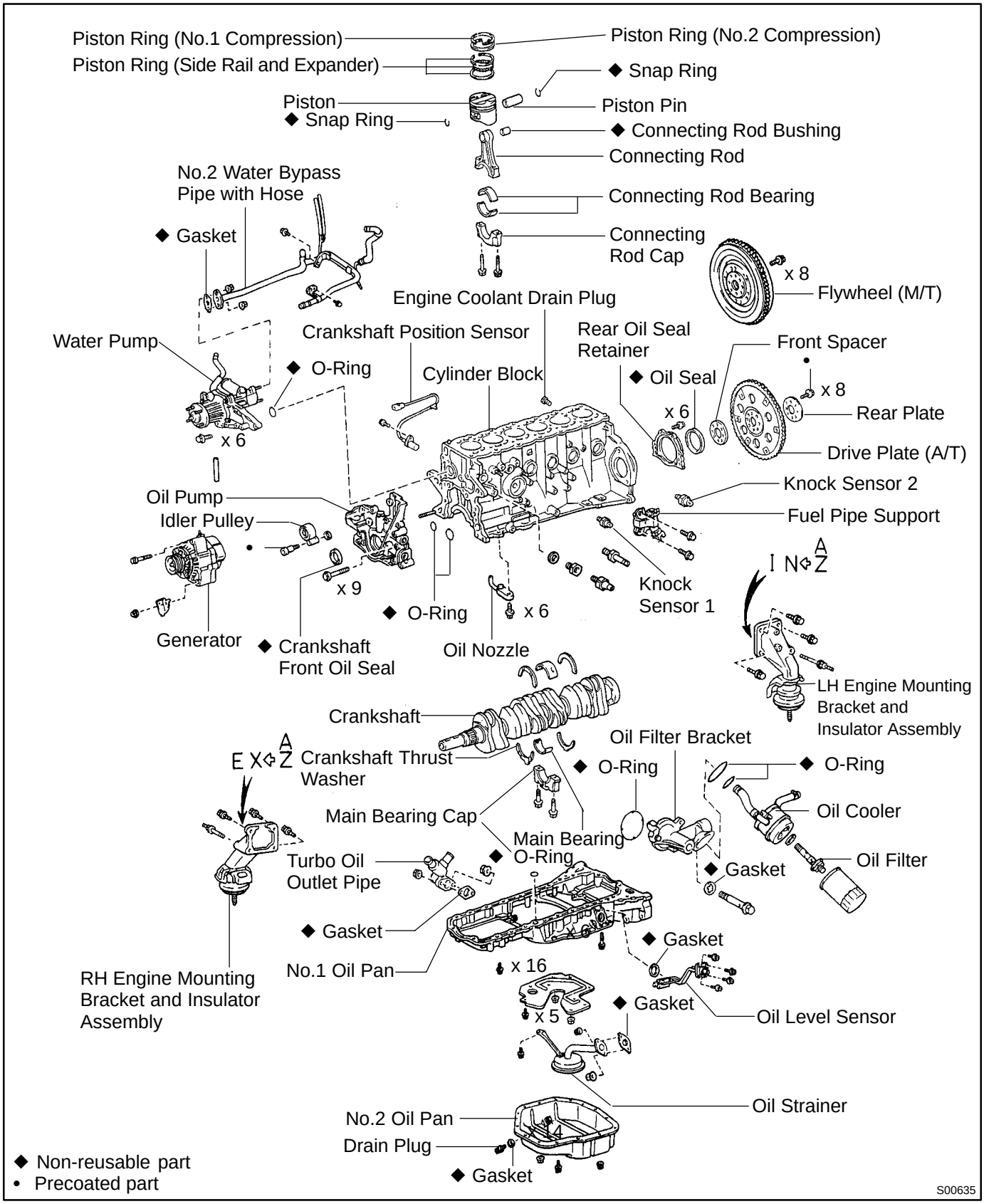

EM0AO-02

DISASSEMBLY

1. M/T:
REMOVE FLYWHEEL

2. A/T:
REMOVE DRIVE PLATE

3. INSTALL ENGINE TO ENGINE STAND FOR DISASSEMBLY

4. REMOVE GENERATOR

5. REMOVE TIMING BELT AND PULLEYS
(See page EM-15)

6. REMOVE CYLINDER HEAD (See page EM-29)

7. REMOVE OIL COOLER (See page LU-20)

8. REMOVE NO.2 WATER BYPASS PIPE WITH HOSE

Remove the 2 bolts, 2 nuts, water bypass pipe and gasket.

9. REMOVE KNOCK SENSORS

Using SST, remove the switch and sensors.

SST 09816-30010

10. REMOVE OIL FILTER BRACKET

Remove the union bolt, gasket, oil filter bracket and O-ring.

11. REMOVE LH ENGINE MOUNTING BRACKET AND INSULATOR ASSEMBLY

12. REMOVE FUEL PIPE SUPPORT

13. REMOVE OIL PRESSURE SWITCH AND KNOCK SENSORS

(a) Using SST, remove the switch and sensors.
SST 09816-30010

(b) Remove the union nut and gasket.

14. REMOVE UNION FOR OIL COOLER HOSE

15. REMOVE ENGINE COOLANT DRAIN PLUG

16. REMOVE RH ENGINE MOUNTING BRACKET AND INSULATOR ASSEMBLY

17. REMOVE CRANKSHAFT POSITION SENSOR

18. REMOVE WATER PUMP (See page CO-7)

19. REMOVE OIL PUMP (See page LU-9)

20. REMOVE REAR OIL SEAL RETAINER

(a) Remove the 6 bolts.

(b) Remove the oil seal retainer by prying the area between the oil seal retainer and main bearing cap with a screwdriver.

21. CHECK CONNECTING ROD THRUST CLEARANCE

Using a dial indicator, measure the thrust clearance while moving the connecting rods back and forth.

Standard thrust clearance:
0.250 - 0.402 mm (0.0098 - 0.0158 in.)
Maximum thrust clearance:
0.50 mm (0.0197 in.)

If the thrust clearance is greater than maximum, replace the connecting rod assembly(s). If necessary, replace the crankshaft.

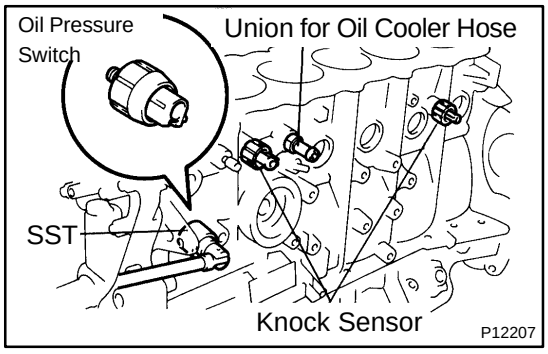

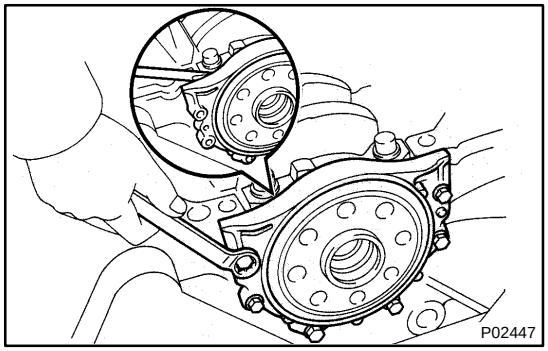

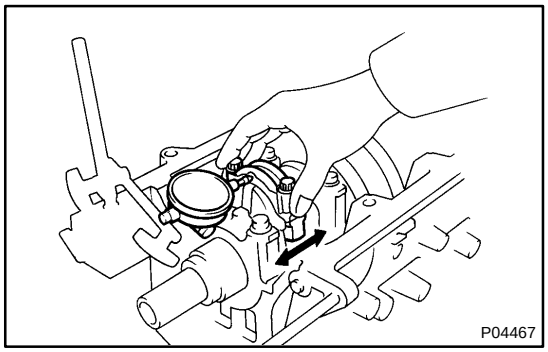

Connecting rod thickness:
25.898 - 25.950 mm (1.0196 - 1.0217 in.)

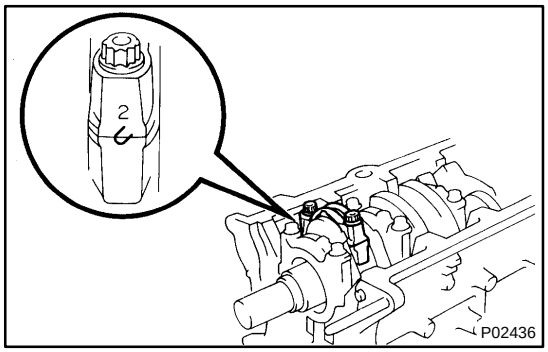

22. REMOVE CONNECTING ROD CAPS AND CHECK OIL CLEARANCE

(a) Check the matchmarks on the connecting rod and cap to ensure correct reassembly.

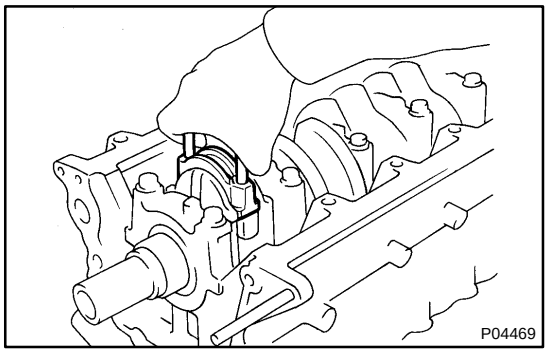

(b) Remove the connecting rod cap bolts.

(c) Using the 2 removed connecting rod bolts, remove the connecting rod cap and lower bearing by wiggling the connecting rod cap right and left.

HINT:

Keep the lower bearing inserted with the connecting rod cap.

(d) Clean the crank pin and bearings.

(e) Check the crank pin and bearing for pitting and scratches.

If the crank pin or bearing is damaged, replace the bearings. If necessary, replace the crankshaft.

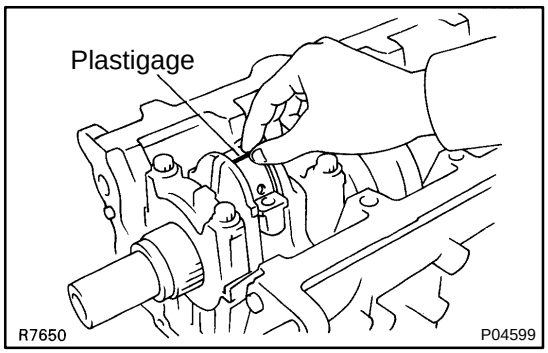

(f) Lay a strip of Plastigage across the crank pin.

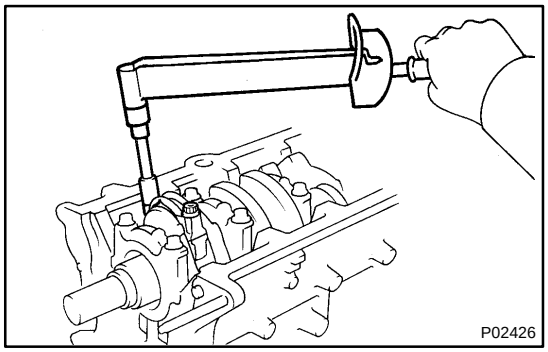

(g) Install the connecting rod cap with the 2 bolts.
(See page EM-88)
1st 29 N·m (300 kgf·cm, 22 ft·lbf)
2nd Turn extra 90°

NOTICE:

Do not turn the crankshaft.

(h) Remove the 2 bolts, connecting rod cap and lower bearing. (See procedure step (b) and (c))

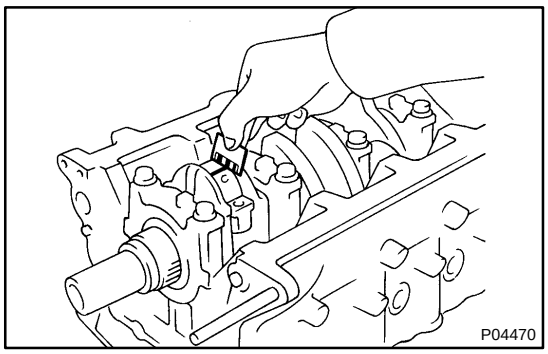

(i) Measure the Plastigage at its widest point.

Standard oil clearance:
STD 0.023 - 0.041 mm (0.0009 - 0.0016 in.)
U/S 0.25 0.028 - 0.066 mm (0.0011 - 0.0026 in.)
Maximum oil clearance.
STD 0.07 mm (0.0027 in.)
U/S 0.25 0.08 mm (0.0031 in.)

If the oil clearance is greater than maximum, replace the bearings. If necessary, grind or replace the crankshaft.

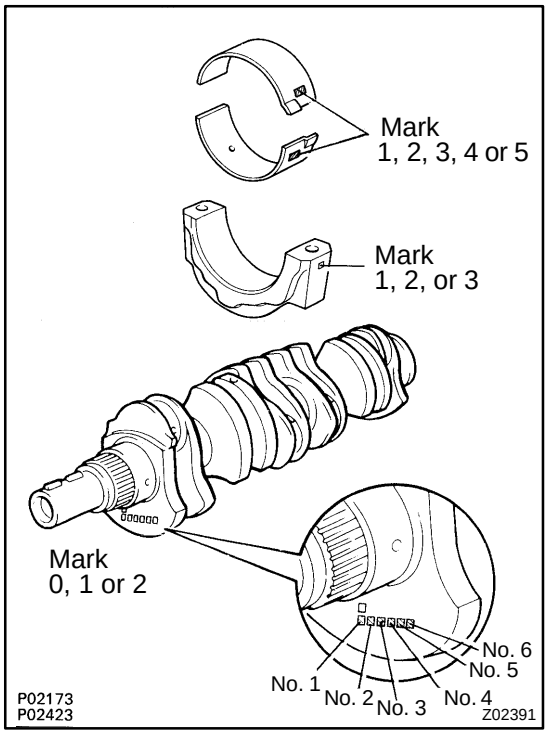

HINT:
If using a standard bearing, replace with one having the same number. If the number of the bearing cannot be determined, select the correct bearing by adding together the numbers imprinted on the connecting rod cap and crankshaft, then selecting the bearing with the same number as the total. There are 5 sizes of standard bearings, marked "1", "2", "3", "4" and "5" accordingly.

	Number mark								
Connecting rod cap	1			2			3		
Crankshaft	0	1	2	0	1	2	0	1	2
Use bearing	1	2	3	2	3	4	3	4	5

EXAMPLE: Connecting rod cap "3" +Crankshaft "1"
= Total number 4 (Use bearing "4")

Reference:
Connecting rod big end inside diameter:

Mark "1"	55.025 - 55.031 mm (2.1663 - 2.1666 in.)
Mark "2"	55.031 - 55.037 mm (2.1666 - 2.1668 in.)
Mark "3"	55.037 - 55.043 mm (2.1668 - 2.1670 in.)

Crankshaft crank pin diameter:

Mark "0"	51.994 - 52.000 mm (2.0470 - 2.0472 in.)
Mark "1"	51.988 - 51.994 mm (2.0468 - 2.0470 in.)
Mark "2"	51.982 - 51.988 mm (2.0465 - 2.0468 in.)

Bearing center wall thickness:

Mark "1"	1.498 - 1.501 mm (0.0590 - 0.0591 in.)
Mark "2"	1.501 - 1.504 mm (0.0591 - 0.0592 in.)
Mark "3"	1.504 - 1.507 mm (0.0592 - 0.0593 in.)
Mark "4"	1.507 - 1.510 mm (0.0593 - 0.0594 in.)
Mark "5"	1.510 - 1.513 mm (0.0594 - 0.0596 in.)

(j) Completely remove the Plastigage.

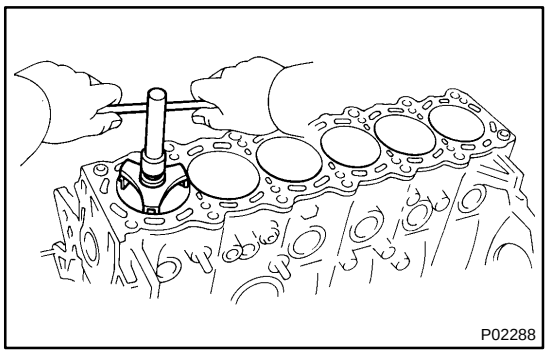
P02288

23. REMOVE PISTON AND CONNECTING ROD ASSEMBLIES

(a) Using a ridge reamer, remove all the carbon from the top of the cylinder.

(b) Push the piston, connecting rod assembly and upper bearing through the top of the cylinder block.

HINT:

- Keep the bearings, connecting rod and cap together.
- Arrange the piston and connecting rod assemblies in correct order.

24. CHECK CRANKSHAFT THRUST CLEARANCE

Using a dial indicator, measure the thrust clearance while prying the crankshaft back and forth with a screwdriver.

Standard thrust clearance:
0.020 - 0.220 mm (0.0008 - 0.0087 in.)
Maximum thrust clearance:
0.30 mm (0.0118 in.)

If the thrust clearance is greater than maximum, replace the thrust washers as a set.

Thrust washer thickness:
1.940 - 1.990 mm (0.0764 - 0.0783 in.)

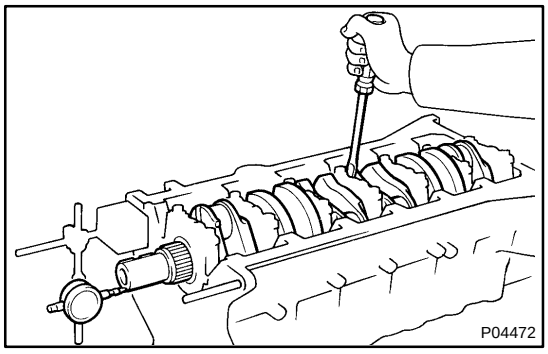
P04472

25. REMOVE MAIN BEARING CAPS AND CHECK OIL CLEARANCE

(a) Uniformly loosen and remove the 14 main bearing cap bolts, in several passes, in the sequence shown.

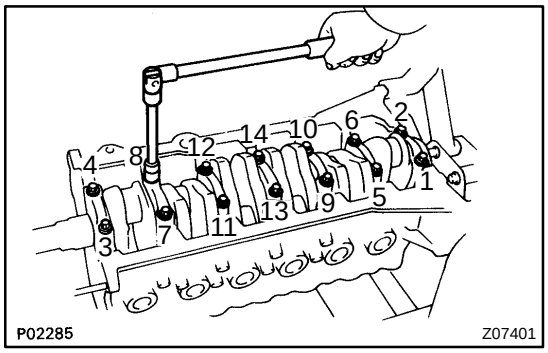

P02285 Z07401

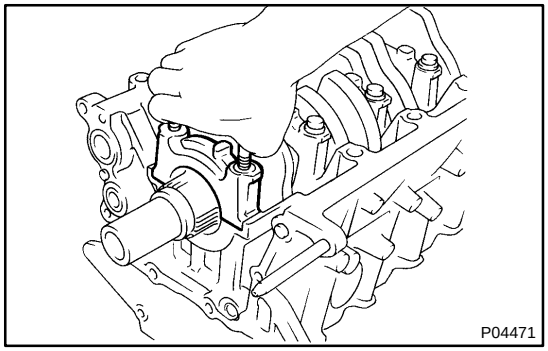
P04471

(b) Using the removed main bearing cap bolts, pry the main bearing cap back and forth, and remove the main bearing caps, lower bearings and lower thrust washers (No.4 main bearing cap only).

HINT:

- Keep the lower bearing and main bearing cap together.
- Arrange the main bearing caps and lower thrust washers in correct order.

(c) Lift out the crankshaft.

HINT:

Keep the upper bearing and upper thrust washers together with the cylinder block.

(d) Clean each main journal and bearing.

(e) Check each main journal and bearing for pitting and scratches.

If the journal or bearing is damaged, replace the bearings. If necessary, grind or replace the crankshaft.

(f) Place the crankshaft on the cylinder block.

(g) Lay a strip of Plastigage across each journal.

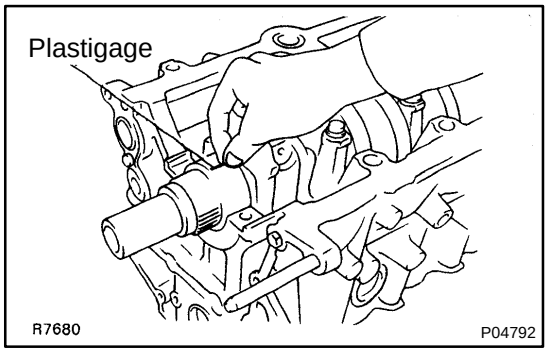

R7680 P04792

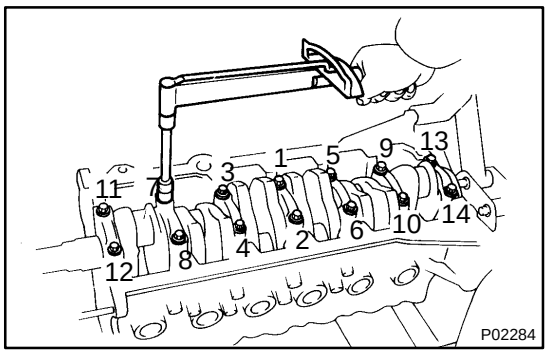

(h) Install the main bearing caps.(See page EM-88)
Torque:
1st¿44 N·m (450 kgf·cm, 33 ft·lbf)
2nd¿Turn extra 90°

NOTICE:
Do not turn the crankshaft.

(i) Remove the main bearing caps.
(See procedure step (a) and (b))

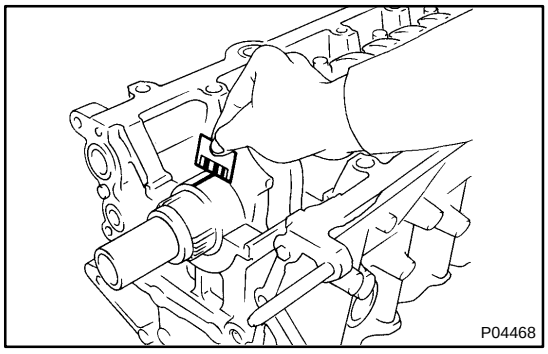

(j) Measure the Plastigage at its widest point.
Standard clearance:
STD¿0.026 - 0.040 mm (0.0010 - 0.0016 in.)
U/S 0.25¿0.025 - 0.061 mm (0.0010 - 0.0024 in.)
Maximum clearance:
STD¿0.06 mm (0.0024 in.)
U/S¿0.25: 0.08 mm (0.0031 in.)

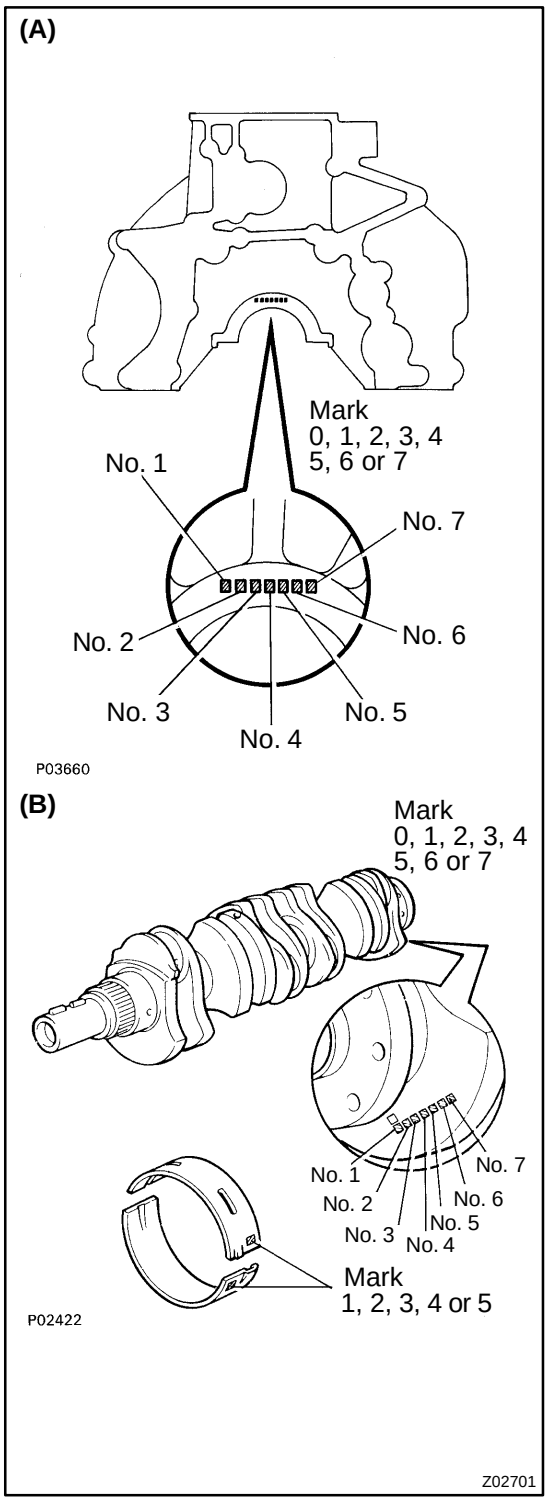

If the oil clearance is greater than maximum, replace the bearings. If necessary, grind or replace the crankshaft.

HINT:

If using a standard bearing, replace with one having the same number. If the number of the bearing cannot be determined, select the correct bearing by adding together the numbers imprinted on the cylinder block and crankshaft, then refer to the table below for the appropriate bearing number. There are 5 sizes of standard bearings, marked ”1”, ”2”, ”3”, ”4” and ”5” accordingly.

Standard sized bearing selection chart

	Total number				” ”:Number mark
Cylinder block (A) + Cankshaft (B) =	0 - 2	3 - 5	6 - 8	9 - 11	12 - 14
Use bearing	”1”	”2”	”3”	”4”	”5”

EXAMPLE: Cylinder block ”3” (A) + Crankshaft ”4”(B)
= Total number 7 (Use bearing ”3”)

Crankshaft number mark	Cylinder block number mark							
	0	1	2	3	4	5	6	7
0	1	1	1	2	2	2	3	3
1	1	1	2	2	2	3	3	3
2	1	2	2	2	3	3	3	4
3	2	2	2	3	3	3	4	4
4	2	2	3	3	3	4	4	4
5	2	3	3	3	4	4	5	5
6	3	3	3	4	4	5	5	5
7	3	3	4	4	5	5	5	5

EXAMPLE: Cylinder block ”3” Crankshaft ”4”
= Use bearing ”3”

Reference:

Cylinder block main journal bore diameter (A):

Mark "0"	66.020 - 66.022 mm (2.59922 - 2.59929 in.)
Mark "1"	66.022 - 66.024 mm (2.59929 - 2.59936 in.)
Mark "2"	66.024 - 66.026 mm (2.59936 - 2.59944 in.)
Mark "3"	66.026 - 66.028 mm (2.59944 - 2.59952 in.)
Mark "4"	66.028 - 66.030 mm (2.59952 - 2.59960 in.)
Mark "5"	66.030 - 66.032 mm (2.59960 - 2.59968 in.)
Mark "6"	66.032 - 66.034 mm (2.59968 - 2.59976 in.)
Mark "7"	66.034 - 66.036 mm (2.59976 - 2.59984 in.)

Crankshaft main journal diameter (B):

Mark "0"	61.998 - 62.000 mm (2.44086 - 2.44094 in.)
Mark "1"	61.996 - 61.998 mm (2.44078 - 2.44086 in.)
Mark "2"	61.994 - 61.996 mm (2.44070 - 2.44078 in.)
Mark "3"	61.992 - 61.994 mm (2.44063 - 2.44070 in.)
Mark "4"	61.990 - 61.992 mm (2.44055 - 2.44063 in.)
Mark "5"	61.988 - 61.990 mm (2.44047 - 2.44055 in.)
Mark "6"	61.986 - 61.988 mm (2.44039 - 2.44047 in.)
Mark "7"	61.984 - 61.986 mm (2.44031 - 2.44039 in.)

Bearing center wall thickness:

Mark "1"	1.994 - 1.997 mm (0.0785 - 0.0786 in.)
Mark "2"	1.997 - 2.000 mm (0.0786 - 0.0787 in.)
Mark "3"	2.000 - 2.003 mm (0.0787 - 0.0789 in.)
Mark "4"	2.003 - 2.006 mm (0.0789 - 0.0790 in.)
Mark "5"	2.006 - 2.009 mm (0.0790 - 0.0791 in.)

(k) Completely remove the Plastigage.

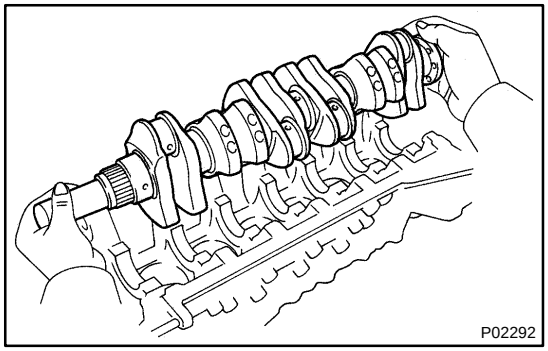

26. REMOVE CRANKSHAFT

(a) Lift out the crankshaft

(b) Remove the upper bearings and upper thrust washers from the cylinder block.

HINT:

Arrange the main bearing caps, bearings and thrust washers in the correct order.

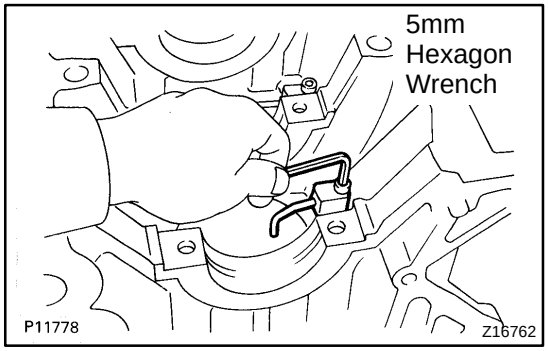

27. REMOVE OIL NOZZLES (WITH RELIEF VALVES)

Using a 5 mm hexagon wrench, remove the bolt and oil nozzle. Remove the 6 oil nozzles.

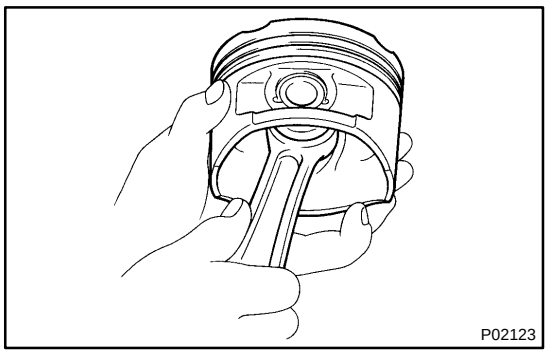

28. CHECK FIT BETWEEN PISTON AND PISTON PIN

Try to move the piston back and forth on the piston pin.
If any movement is felt, replace the piston and pin as a set.

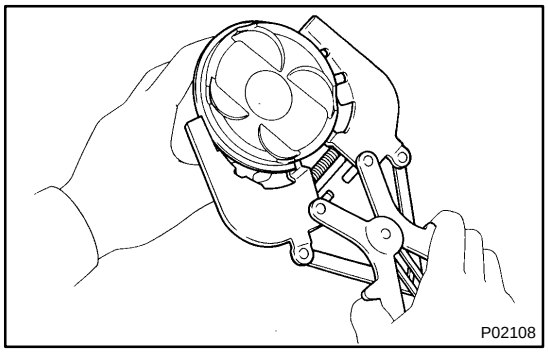

29. REMOVE PISTON RINGS

(a) Using a piston ring expander, remove the 2 compression rings.
(b) Remove the 2 side rails and oil ring expander by hand.

HINT:
Arrange the piston rings in correct order only.

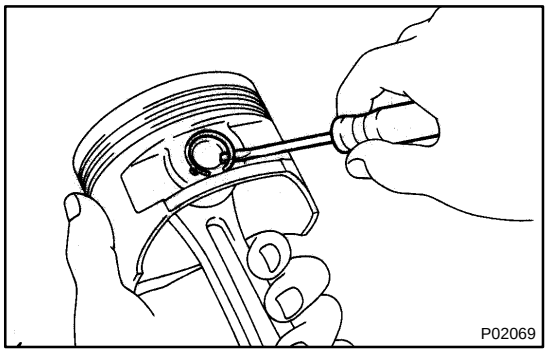

30. DISCONNECT CONNECTING ROD FROM PISTON

(a) Using a small screwdriver, remove the 2 snap rings.

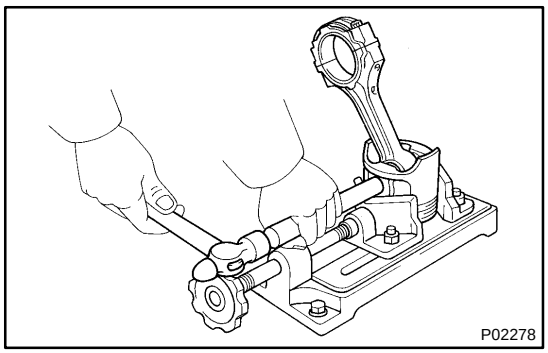

(b) Gradually heat the piston to about 80˚C (176˚F).
(c) Using a plastic-faced hammer and brass bar, lightly tap out the piston pin and remove the connecting rod.

HINT:

- The piston and pin are a matched set.
- Arrange the pistons, pins, rings, connecting rods and bearings in the correct order.

EM0AP-02

INSPECTION

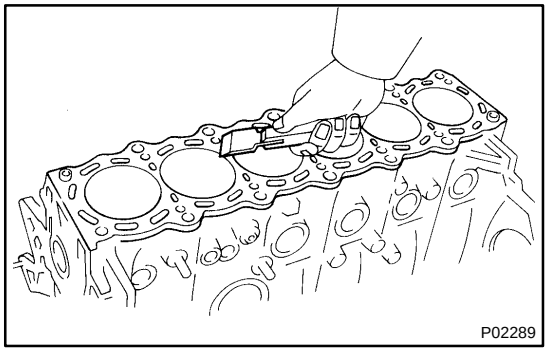

1. REMOVE GASKET MATERIAL

Using a gasket scraper, remove all the gasket material from the cylinder block surface.

2. CLEAN CYLINDER BLOCK

Using a soft brush and solvent, thoroughly clean the cylinder block.

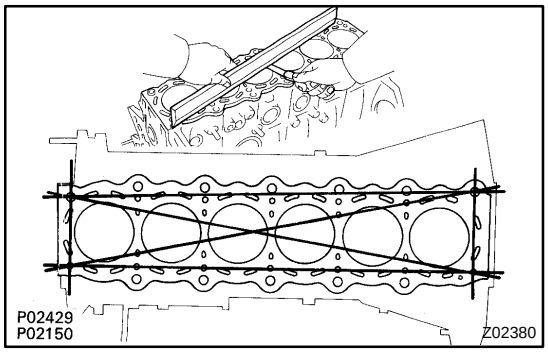

3. INSPECT CYLINDER BLOCK SURFACE FOR FLATNESS

Using precision straight edge and feeler gauge, measure the surfaces of the cylinder block for warpage.

Maximum warpage: 0.07 mm (0.0028 in.)

If warpage is greater than maximum, replace the cylinder block.

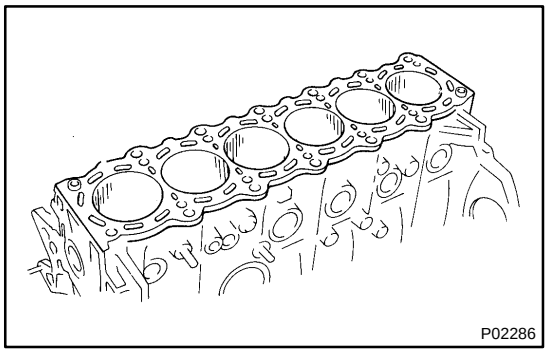

4. INSPECT CYLINDER FOR VERTICAL SCRATCHES

Visually check the cylinder for vertical scratches.

If deep scratches are present, replace the cylinder block.

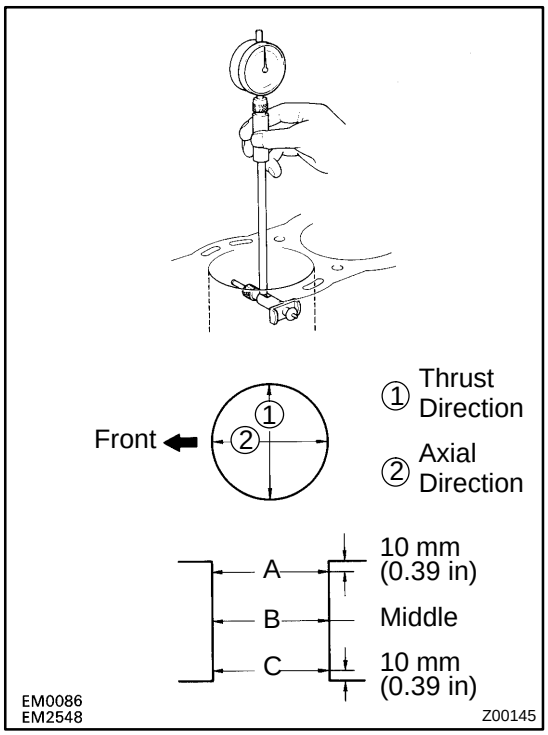

5. INSPECT CYLINDER BORE DIAMETER

Using a cylinder gauge, measure the cylinder bore diameter at positions A, B and C in the thrust and axial directions.

Standard diameter:

86.000 - 86.013 mm (3.3858 - 3.3863 in.)

Maximum diameter: 86.02 mm (3.3866 in.)

If the diameter is greater than maximum, replace the cylinder block.

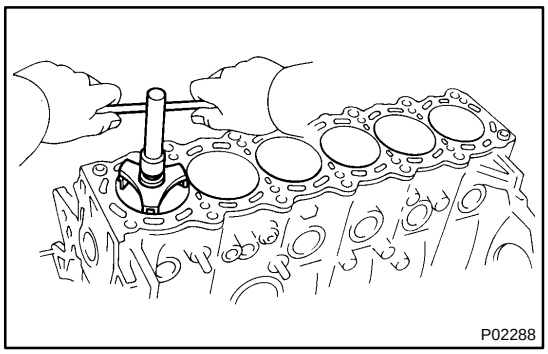

6. REMOVE CYLINDER RIDGE

If the wear is less than 0.2 mm (0.008 in.), using a ridge reamer, grind the top of the cylinder.

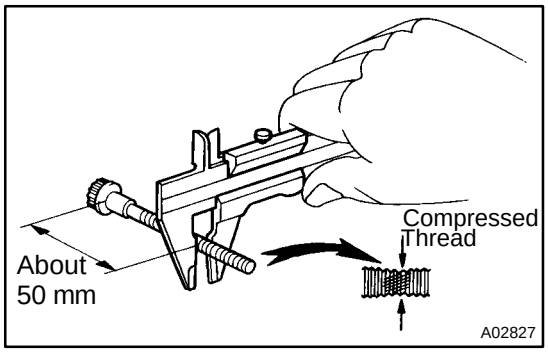

7. INSPECT MAIN BEARING CAP BOLTS

Using vernier calipers, measure the minimum diameter of the compressed thread at the measuring point.

Standard diameter:
9.96 - 9.97 mm (0.3921 - 0.3925 in.)
Minimum diameter: 9.7 mm (0.382 in.)

If the diameter is less than minimum, replace the bolt.

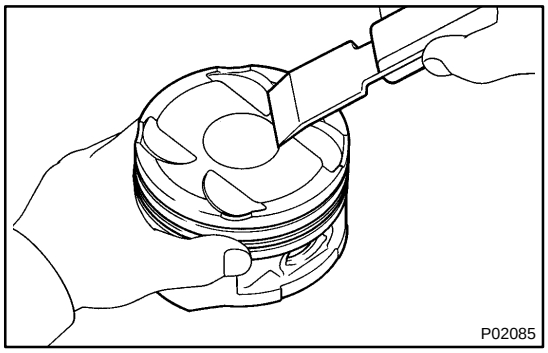

8. CLEAN PISTON

(a) Using a gasket scraper, remove the carbon from the piston top.

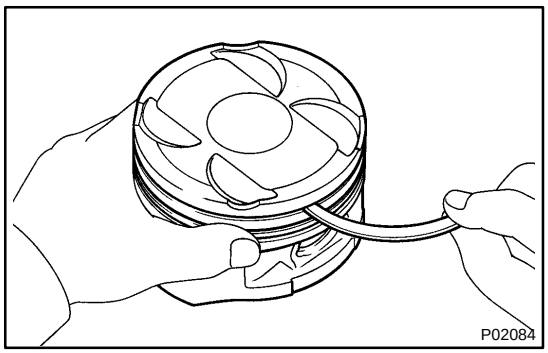

(b) Using a groove cleaning tool or broken ring, clean the piston ring grooves.
(c) Using solvent and a brush, thoroughly clean the piston.

NOTICE:
Do not use a wire brush.

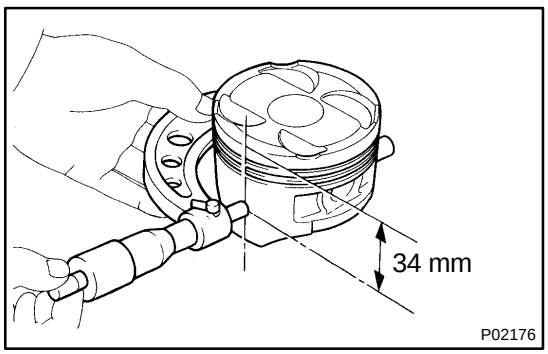

9. INSPECT PISTON OIL CLEARANCE

(a) Using a micrometer, measure the piston diameter at right angles to the piston pin center line, 34 mm (1.34 in.) from the piston head.

Piston diameter:
85.917 - 85.927 mm (3.3826 - 3.3830 in.)

(b) Measure the cylinder bore diameter in the thrust directions. (See step 5)

(c) Subtract the piston diameter measurement from the cylinder bore diameter measurement.

Standard oil clearance:
0.073 - 0.096 mm (0.0029 - 0.0038 in.)
Maximum oil clearance:
0.12 mm (0.0047 in.)

If the oil clearance is greater than maximum, replace all the 6 pistons. If necessary, replace the cylinder block.

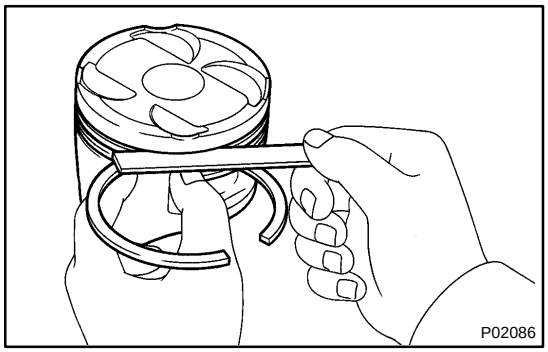

10. INSPECT PISTON RING GROOVE CLEARANCE

Using a feeler gauge, measure the clearance between new piston ring and the wall of the piston ring groove.

Ring groove clearance:
No.1 0.040 - 0.080 mm (0.0016 - 0.0031 in.)
No.2 0.030 - 0.070 mm (0.0012 - 0.0028 in.)

If the clearance is not as specified, replace the piston.

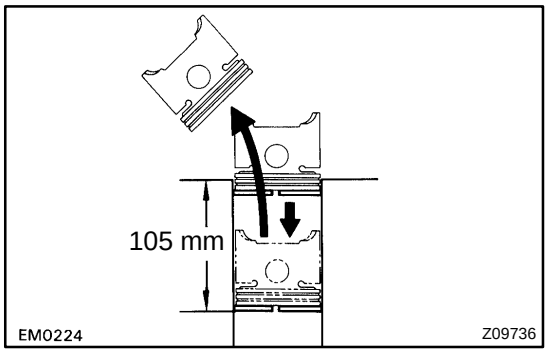

11. INSPECT PISTON RING END GAP

(a) Insert the piston ring into the cylinder bore.

(b) Using a piston, push the piston ring a little beyond the bottom of the ring travel, 105 mm (4.13 in.) from the top of the cylinder block.

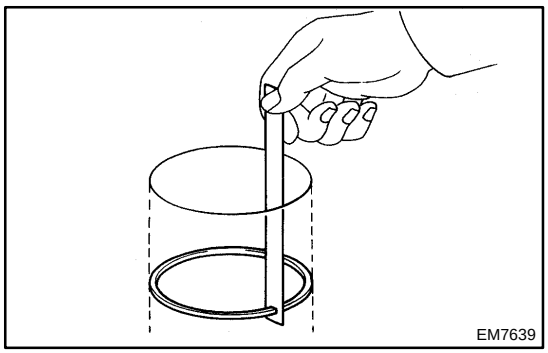

(c) Using a feeler gauge, measure the ring end gap.

Ring end gap:

Piston ring	STD mm (in.)	Maximum mm (in.)
No.1	0.300 - 0.400 (0.0118 - 0.0157)	1.000 (0.0394)
No.2	0.350 - 0.450 (0.0138 - 0.0178)	1.050 (0.0413)
Oil (Side rail)	0.130 - 0.380 (0.0051 - 0.0150)	0.980 (0.0386)

If the end gap is greater than maximum, replace the piston ring.
If the end gap is greater than maximum, even with a new piston ring, replace the cylinder block.

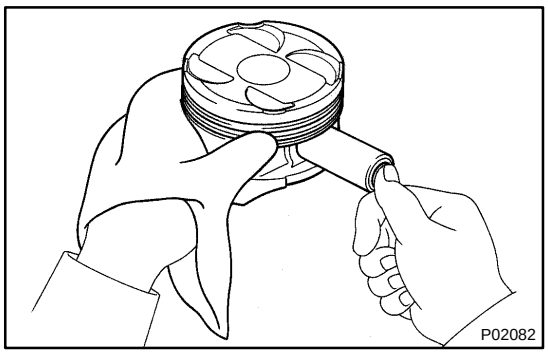

12. PINSPECT PISTON PIN FIT

At 80˚C (176˚F), you should be able to push the piston pin into the piston pin hole with your thumb.

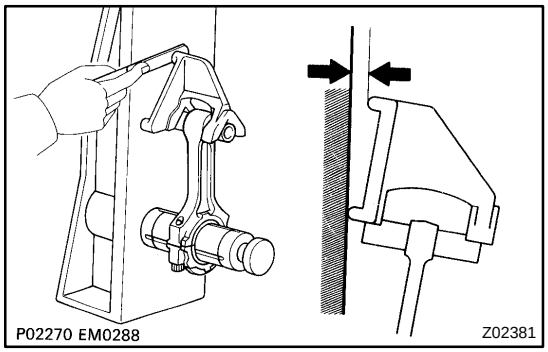

13. INSPECT CONNECTING ROD ALIGNMENT

Using a feeler gauge and rod aligner, check the connecting rod alignment.

- Check for out-of-alignment

Maximum out-of-alignment:
0.05 mm (0.0020 in.) per 100 mm (3.94 in.)

If out-of-alignment is greater than maximum, replace the connecting rod assembly.

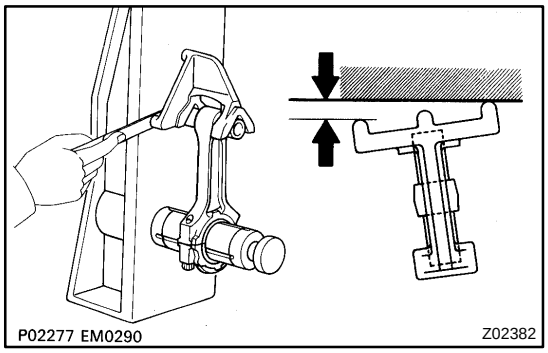

- Check for twist

Maximum twist:
0.15 mm (0.0059 in.) per 100 mm (3.94 in.)

If twist is greater than maximum, replace the connecting rod assembly.

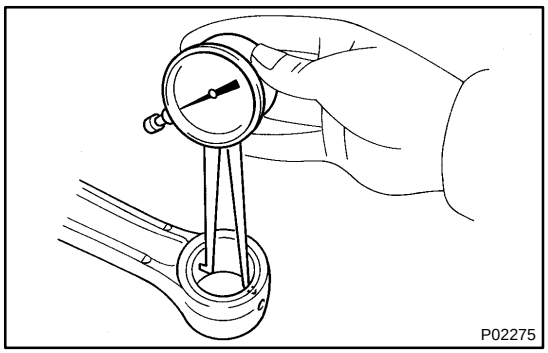

14. INSPECT PISTON PIN OIL CLEARANCE

(a) Using a caliper gauge, measure the inside diameter of the connecting rod bushing.
Bushing inside diameter:
22.005 - 22.014 mm (0.8663 - 0.8667 in.)

(b) Using a micrometer, measure the piston pin diameter.
Piston pin diameter:
21.997 - 22.006 mm (0.8660 - 0.8664 in.)

(c) Subtract the piston pin diameter measurement from the bushing inside diameter measurement.
Standard oil clearance:
0.005 - 0.011 mm (0.0002 - 0.0004 in.)
Maximum oil clearance:
0.05 mm (0.0020 in.)

If the oil clearance is greater than maximum, replace the bushing. If necessary, replace the piston and piston pin as a set.

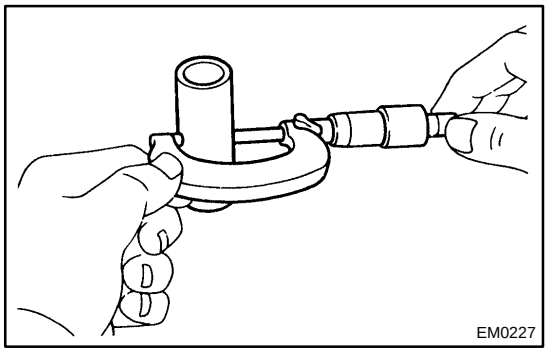

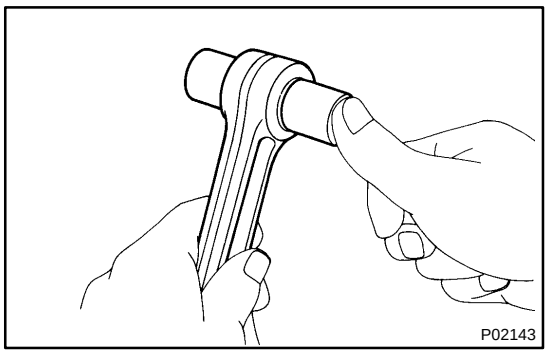

(d) Check the piston pin fit at room temperature.
Coat the piston pin with engine oil and push it into the connecting rod with your thumb.

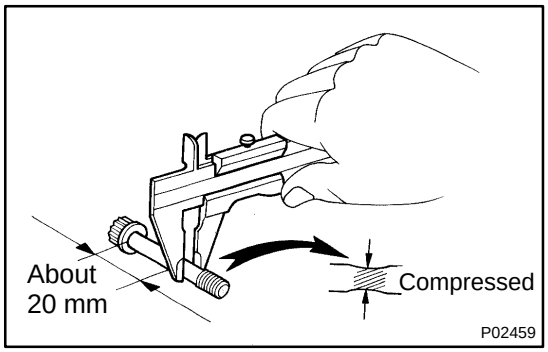

15. INSPECT CONNECTING ROD BOLTS

Using vernier calipers, measure the minimum diameter of the compressed bolt at the measuring point.

Standard diameter: 8.1 - 8.3 mm (0.319 - 0.327 in.)
Minimum diameter: 8.0 mm (0.315 in.)

If the diameter is less than minimum, replace the connecting rod bolt.

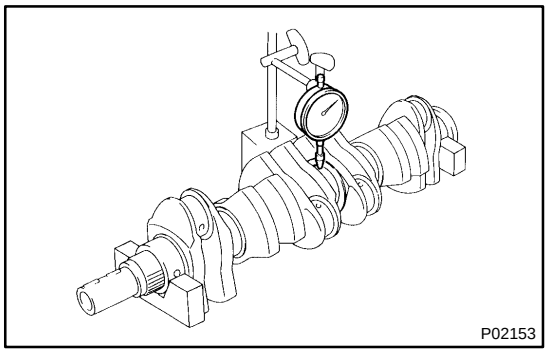

16. INSPECT CRANKSHAFT FOR RUNOUT

(a) Place the crankshaft on V-blocks.
(b) Using a dial indicator, measure the circle runout at the center journal.

Maximum circle runout: 0.06 mm (0.0024 in.)

If the circle runout is greater than maximum, replace the crankshaft.

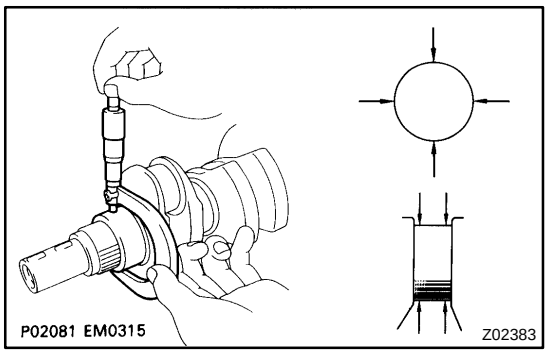

17. INSPECT MAIN JOURNALS AND CRANK PINS

(a) Using a micrometer, measure the diameter of each main journal and crank pin.

Diameter:

Item	STD mm (in.)	U/S 0.25 mm (in.)
Main journal	61.984 - 62.000 (2.4403 - 2.4409)	61.745 - 61.755 (2.4309 - 2.4313)
Crank pin	51.982 - 52.000 (2.0465 - 2.0472)	51.745 - 51.755 (0.0372 - 2.0376)

If the diameter is not as specified, check the oil clearance. (See page EM-71)

(b) Check each main journal and crank pin for taper and out-of-round as shown.

Maximum taper and out-of round:
0.02 mm (0.0008 in.)

If the taper or out-of-round is greater than maximum, grind or replace the crankshaft.

18. IF NECESSARY, GRIND AND HONE MAIN JOURNALS AND/OR CRANK PINS

(a) Grind and hone the main journals and/or crank pins to the finished undersized diameter
(See procedure step 17).

(b) Install new main journal and/or crank pin undersized bearings.

EM0AQ-02

REPLACEMENT

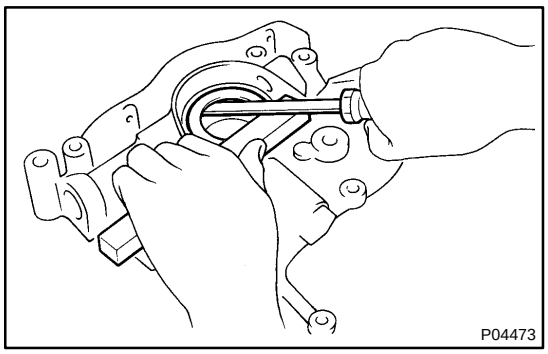

HINT:

There are 2 methods A and B to replace the oil seal as follows:

1. REPLACE CRANKSHAFT FRONT OIL SEAL

(a) If oil pump is removed from cylinder block.

(1) Using a screwdriver, pry out the oil seal.

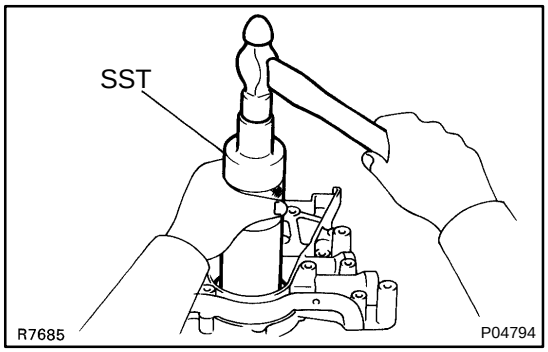

(2) Using SST and a hammer, tap in a new oil seal until its surface is flush with the oil pump body edge.

SST 09316-6001 1 (09316-00011)

(3) Apply MP grease to the oil seal lip.

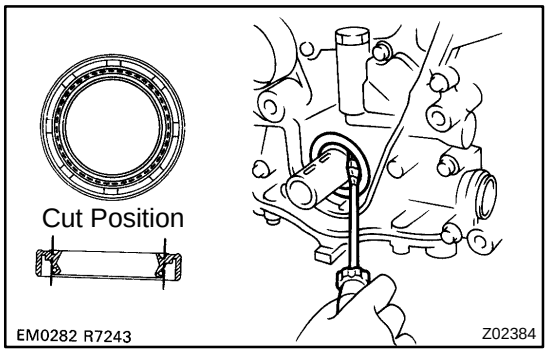

(b) If oil pump is installed on cylinder block:

(1) Using a knife, cut off the oil seal lip.

(2) Using a screwdriver, pry out the oil seal.

NOTICE:

Be careful not to damage the crankshaft. Tape the screwdriver tip.

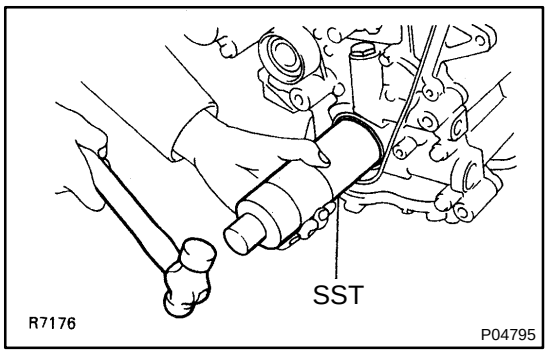

(3) Apply MP grease to a new oil seal lip.

(4) Using SST and a hammer, tap in the oil seal until its surface is flush with the oil pump body edge.

SST 09316-6001 1 (09316-00011)

2. REPLACE CRANKSHAFT REAR OIL SEAL

(a) If rear oil seal retainer is removed from cylinder block:

(1) Using a screwdriver and hammer, tap out the oil seal.

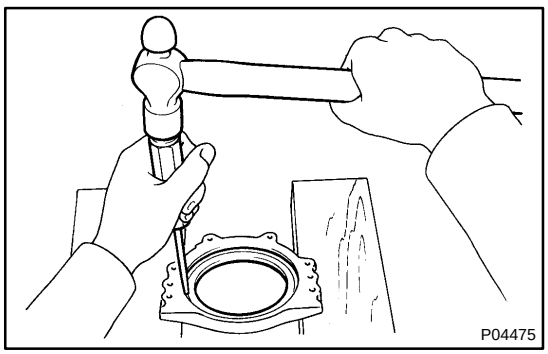

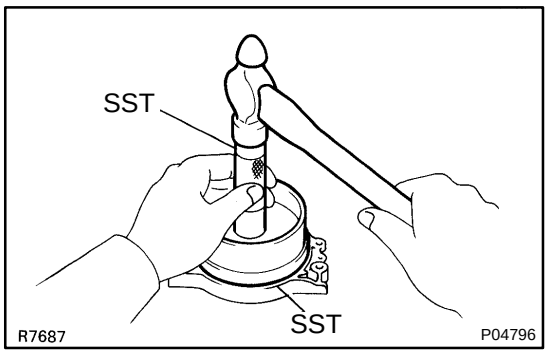

(2) Using SST and a hammer, tap in a new oil seal until its surface is flush with the rear oil seal retainer edge.
SST 09223-15030, 09950-70010 (09951-07100)
(3) Apply MP grease to the oil seal lip.

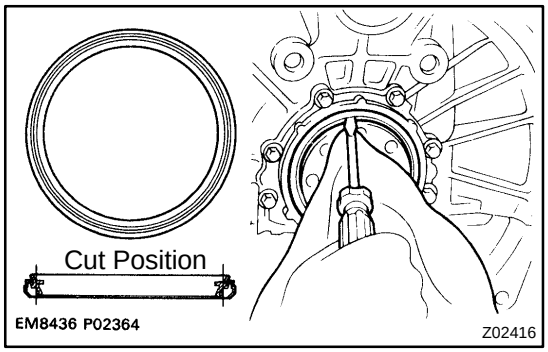

(b) If rear oil seal retainer is installed on cylinder block:
(1) Using a knife, cut off the oil seal lip.
(2) Using a screwdriver, pry out the oil seal.

NOTICE:
Be careful not to damage the crankshaft. Tape the screwdriver tip.

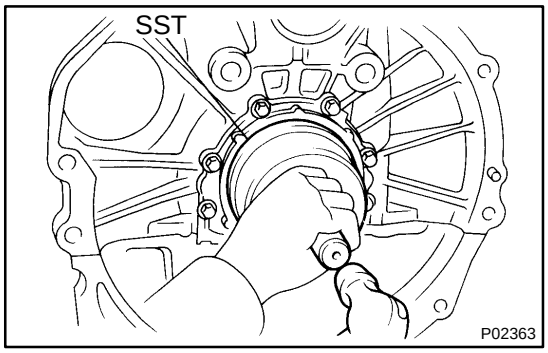

(3) Apply MP grease to a new oil seal lip.
(4) Using SST and a hammer, tap in the oil seal until its surface is flush with the rear oil seal retainer edge.
SST 09223-15030, 09950-70010 (09951-07100)

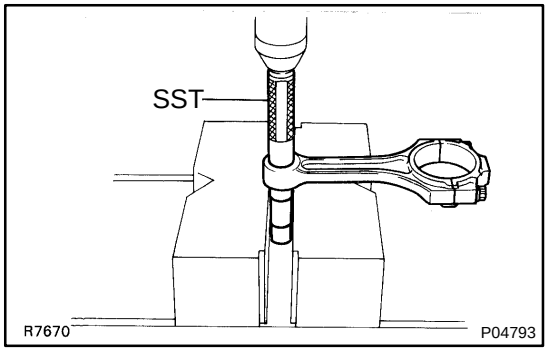

3. REPLACE CONNECTING ROD BUSHING
(a) Using SST and a press, press out the bushing.
SST 09222-30010

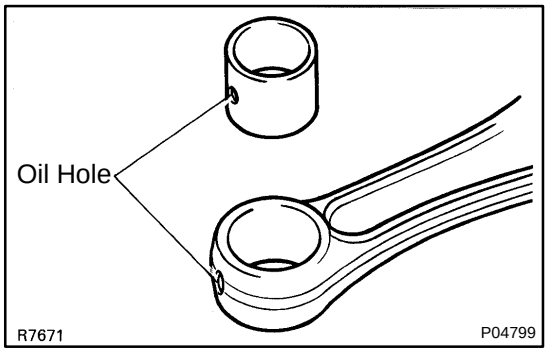

(b) Align the oil holes of a new bushing and the connecting rod.
(c) Using SST and a press, press in the bushing.
SST 09222-30010

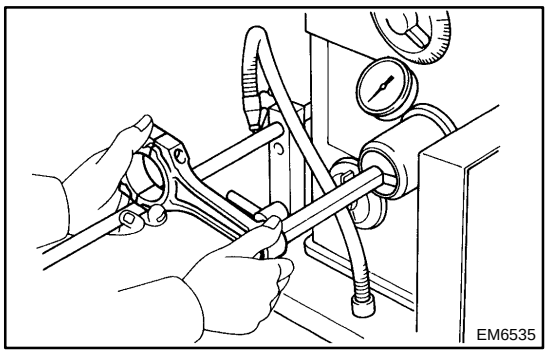

(d) Using a pin hole grinder, bore the bushing to obtain the standard specified clearance (See page EM-79) between the bushing and piston pin.

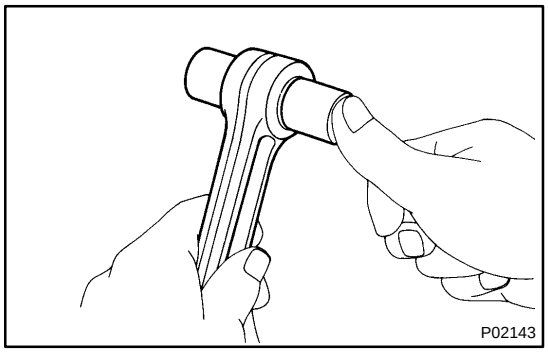

(e) Check the piston pin fit at room temperature.
Coat the piston pin with engine oil and push it into the connecting rod with your thumb.

EM1DZ-01

REASSEMBLY

HINT:

- Thoroughly clean all parts to be assembled.
- Before installing the parts, apply fresh engine oil to all sliding and rotating surfaces.
- Replace all gaskets, O-rings and oil seals with new parts.

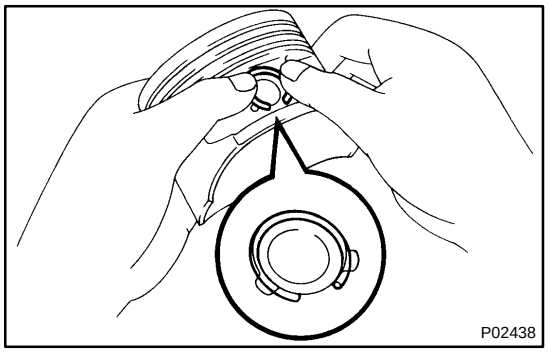

1. ASSEMBLE PISTON AND CONNECTING ROD

(a) Install a new snap ring at one end of the piston pin hole.

HINT:

Be sure that end gap of the snap ring is not aligned with the pin hole cutout portion of the piston.

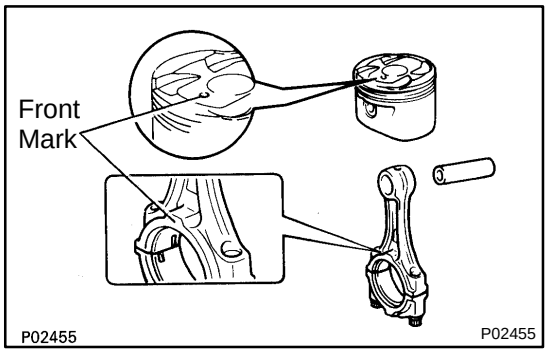

(b) Gradually heat the piston to about 80˚C (176˚F).

(c) Coat the piston pin with engine oil.

(d) Align the front marks of the piston and connecting rod, and push in the piston pin with your thumb.

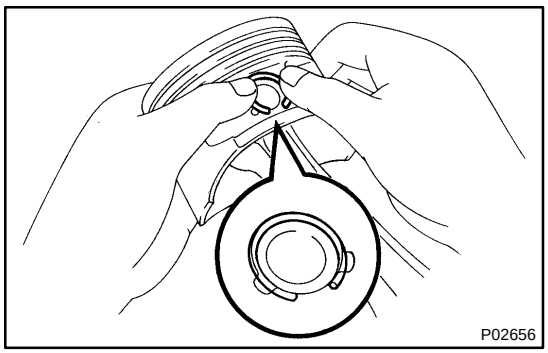

(e) Install a new snap ring at the other end of the piston pin hole.

HINT:

Be sure that end gap of the snap ring is not aligned with the pin hole cutout portion of the piston.

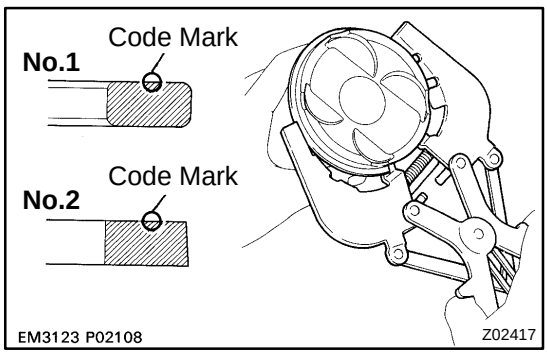

2. INSTALL PISTON RINGS

(a) Install the oil ring expander and 2 side rails by hand.

(b) Using a piston ring expander, install the 2 compression rings with the code mark facing up.

Code mark:

No.1 2T

No.2 2N

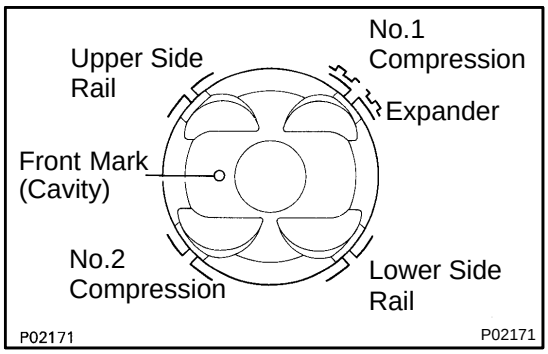

(c) Position the piston rings so that the ring ends are as shown.

NOTICE:

Do not align the piston ring ends.

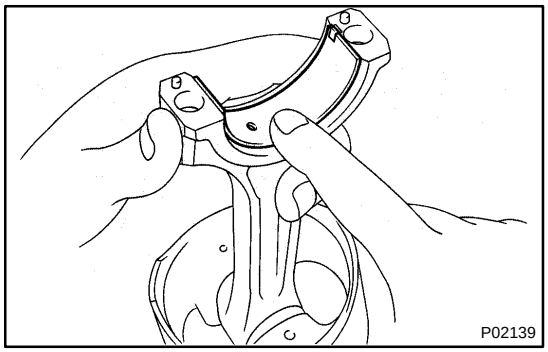

3. INSTALL BEARINGS

(a) Align the bearing claw with the groove of the connecting rod and connecting cap.

(b) Install the bearings in the connecting rod and connecting rod cap.

NOTICE:

Apply a generous amount of oil on the sliding surface of the bearing, and not on the back of it or on the surface to which it is installed.

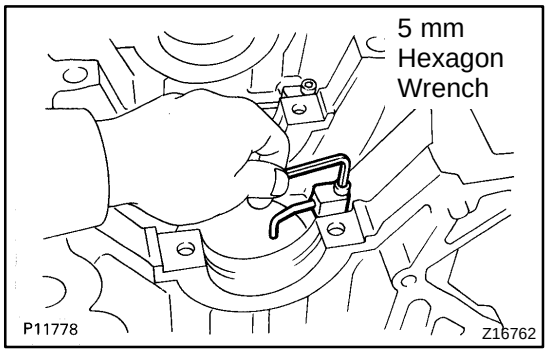

4. INSTALL OIL NOZZLES (WITH RELIEF VALVES)

Using a 5 mm hexagon wrench, install the oil nozzle with the bolt. Install the 6 oil nozzles.

Torque: 8.8 N·m (90 kgf·cm, 78 in.·lbf)

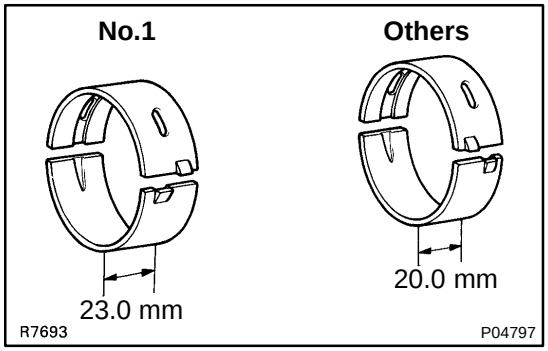

5. INSTALL MAIN BEARINGS

HINT:

- Main bearings come in widths of 20.0 mm (0.787 in.) and 23.0 mm (0.906 in.). Install the 23.0 mm bearings in the No.1 cylinder block journal position with the main bearing cap. Install the 20.0 mm bearings in the other positions.
- Upper bearings have an oil groove and oil holes; lower bearings do not.

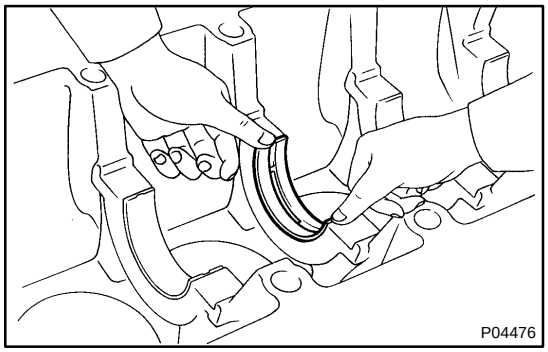

(a) Align the bearing claw with the claw groove of the main bearing cap or cylinder block.

NOTICE:

Install the bearing with the oil hole in the cylinder block.

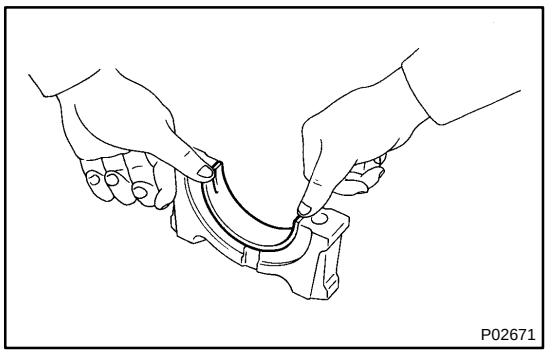

(b) Install the bearings in the cylinder block and main bearing caps.

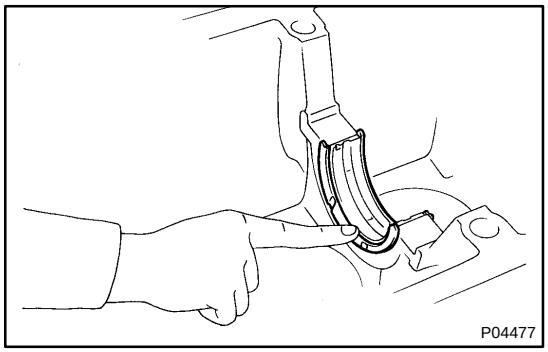

6. INSTALL UPPER THRUST WASHERS

Install the 2 thrust washers under the No.4 main journal position of the cylinder block with the oil grooves facing outward.

7. PLACE CRANKSHAFT ON CYLINDER BLOCK

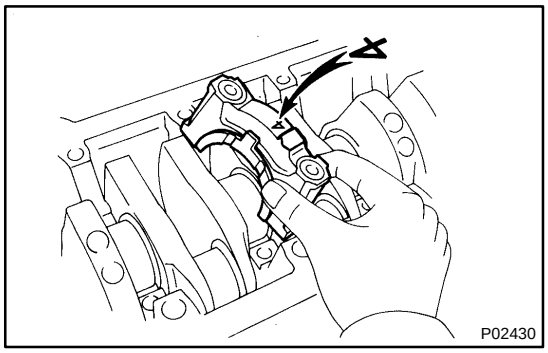

8. PLACE MAIN BEARING CAP AND LOWER THRUST WASHERS ON CYLINDER BLOCK

(a) Install the lower thrust washers on the No.4 main bearing with the grooves facing outward.

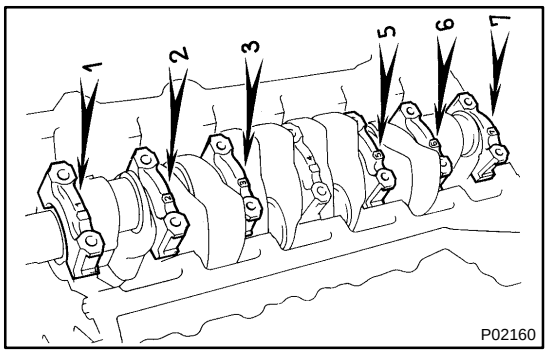

(b) Install the main bearing caps in numerical order with the arrows facing forward.

9. INSTALL MAIN BEARING CAP BOLTS

HINT:

- The main bearing cap bolts are tightened in 2 progressive steps (steps (b) and (d)).
- If any of the main bearing bolts break or deform, replace them.

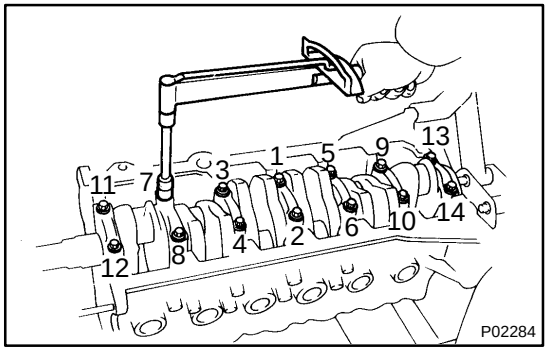

(a) Apply a light coat of engine oil on the threads and under the heads of the main bearing cap bolts.

(b) Install and uniformly tighten the 14 main bearing cap bolts, in several passes, in the sequence shown.

Torque: 44 N·m (450 kgf·cm, 33 ft·lbf)

If any one of the main bearing cap bolts does not meet the torque specification, replace the main bearing cap bolt.

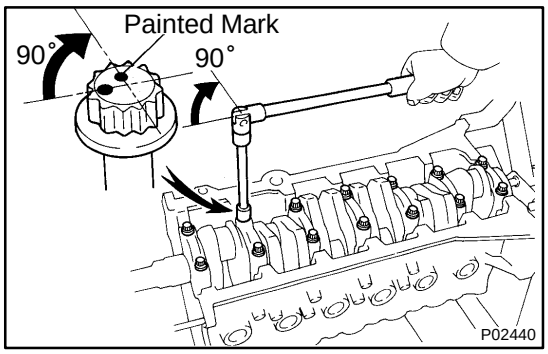

(c) Mark the front of the main bearing cap bolt head with paint.
(d) Retighten the main bearing cap bolts 90° in the numerical order shown above.
(e) Check that the painted mark is now at a 90° angle to the front.
(f) Check that the crankshaft turns smoothly.

10. CHECK CRANKSHAFT THRUST CLEARANCE
(See page EM-71)

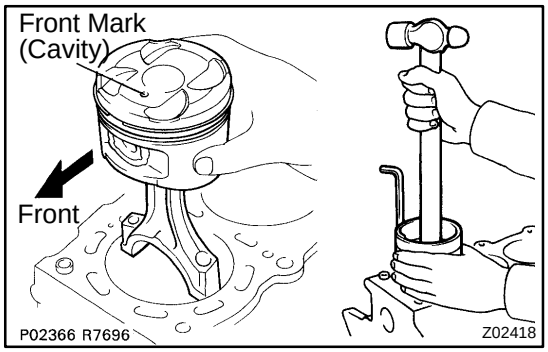

11. INSTALL PISTON AND CONNECTING ROD ASSEMBLIES

Using a piston ring compressor, push the correctly numbered piston and connecting rod assemblies into each cylinder with the front mark of the piston facing forward.

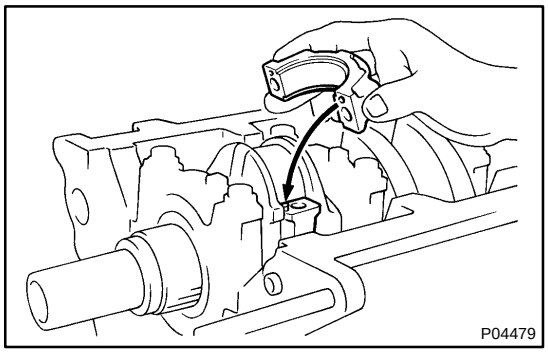

12. PLACE CONNECTING ROD CAP ON CONNECTING ROD

(a) Match the numbered connecting rod cap with the connecting rod.
(b) Install the connecting rod cap with by aligning the dowel pin to the corresponding hole.

13. INSTALL CONNECTING ROD CAP BOLTS

HINT:

- The connecting rod cap bolts are tightened in 2 progressive steps (steps (b) and (d)).
- If any of the connecting rod bolts break or deform, replace them.

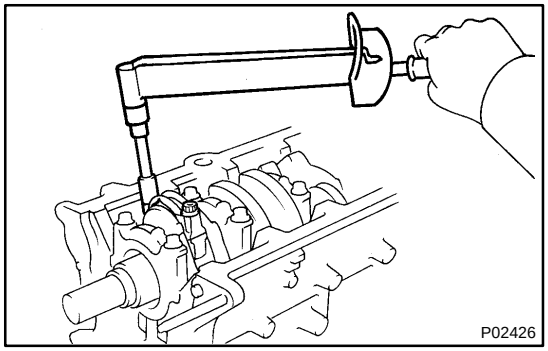

(a) Apply a light coat of engine oil on the threads and under the heads of the connecting rod cap bolts.
(b) At first, install and alternately tighten the bolts of the connecting rod cap in several passes.
Torque: 29 N·m (300 kgf·cm, 22 ft·lbf)

If any one of the connecting rod cap bolts does not meet the torque specification, replace the cap bolt.

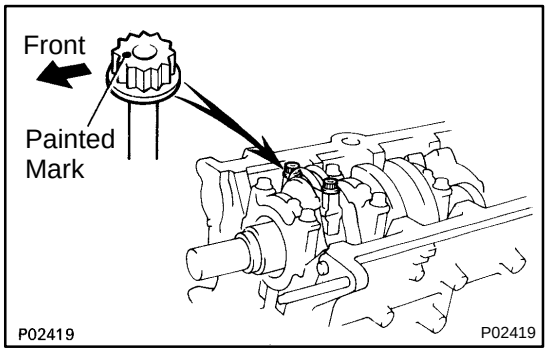

(c) Mark the front of the connecting rod cap bolt with paint.

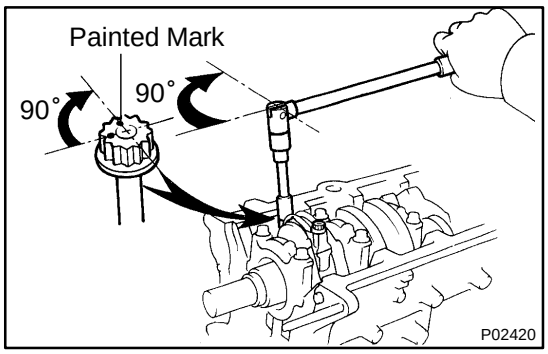

(d) Retighten the connecting rod cap bolts 90° in the numerical order shown.

(e) Check that the painted mark is now at a 90° angle to the front.

(f) Check that the crankshaft turns smoothly.

14. CHECK CONNECTING ROD THRUST CLEARANCE (See page EM-79)

15. INSTALL REAR OIL SEAL RETAINER

(a) Remove any old packing (FIPG) material and be careful not to drop any oil on the contact surfaces of the retainer and cylinder block.

- Using a razor blade and gasket scraper, remove all the old packing (FIPG) material from the gasket surfaces and sealing groove.
- Thoroughly clean all components to remove all debris.
- Using a non-residue solvent, clean both sealing surfaces.

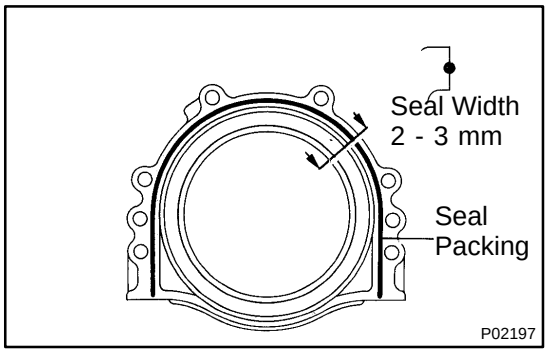

(b) Apply seal packing to the retainer as shown in the illustration.

Seal packing:
Part No. 08826-00080 or equivalent

- Install a nozzle that has been cut to a 2 - 3 mm (0.08 - 0.12 in.) opening.
- Parts must be assembled within 3 minutes of application. Otherwise the material must be removed and reapplied.
- Immediately remove nozzle from the tube and reinstall cap.

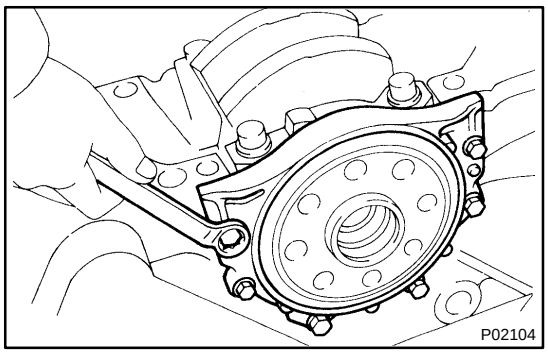

(c) Install the retainer with the 6 bolts.
Torque: 6.0 N·m (60 kgf·cm, 53 in.·lbf)

16. INSTALL OIL PUMP (See page LU-16)

17. INSTALL WATER PUMP (See page CO-11)

18. INSTALL CRANKSHAFT POSITION SENSOR
Torque: 9.0 N·m (90 kgf·cm, 80 in.·lbf)

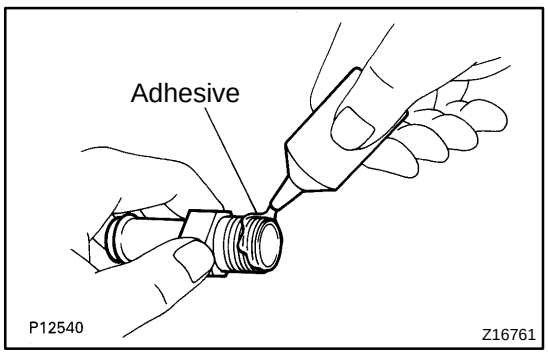

19. INSTALL RH ENGINE MOUNTING BRACKET AND INSULATOR ASSEMBLY
Torque: 59 N·m (590 kgf·cm, 44 ft·lbf)

20. INSTALL ENGINE COOLANT DRAIN PLUG
Torque: 30 N·m (300 kgf·cm, 22 ft·lbf)

21. INSTALL UNION FOR OIL COOLER HOSE

(a) Apply adhesive to 2 or 3 threads of the union.
Adhesive:
Part No. 08833-00070, THREE BOND 1324, or equivalent

(b) Install the union.
Torque: 40 N·m (400 kgf·cm, 30 ft·lbf)

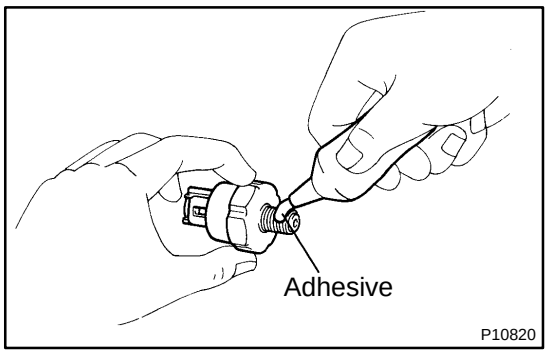

22. INSTALL OIL PRESSURE SWITCH AND KNOCK SENSORS

(a) Install the union nut with a new gasket.
SST 09816-30010
Torque: 55 N·m (550 kgf·cm, 41 ft·lbf)

(b) Apply adhesive to 2 or 3 threads of the oil pressure switch.
Adhesive:
Part No. 08833-00080, THREE BOND 1344, LOCKTITE 242 or equivalent

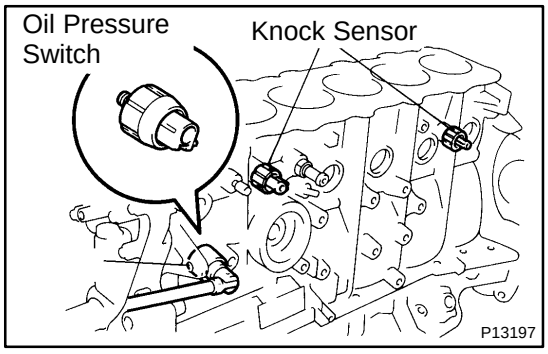

(c) Using SST, install the switch and sensors.
SST 09816-30010
Torque:
Oil pressure switch: 14 N·m (150 kgf·cm, 11 ft·lbf)
Knock sensor: 44 N·m (450 kgf·cm, 33 ft·lbf)

23. INSTALL FUEL PIPE SUPPORT
Torque: 28 N·m (290 kgf·cm, 21 ft·lbf)

24. INSTALL LH ENGINE MOUNTING BRACKET AND INSULATOR ASSEMBLY
Torque: 58 N·m (590 kgf·cm, 44 ft·lbf)

25. INSTALL OIL FILTER BRACKET

(a) Check and clean the oil filter bracket installation.
(b) Place a new O-ring in position on the oil filter bracket.
(c) Apply clean engine oil to the O-ring.
(d) Install a new gasket to the union bolt.
(e) Install the oil filter bracket with the union bolt.
Torque: 90 N·m (900 kgf·cm, 66 ft·lbf)

26. INSTALL NO.2 WATER BYPASS PIPE WITH HOSE

(a) Install a new gasket to the water pump.
(b) Install the water bypass pipe with the 2 bolts and 2 nuts.
Torque: 21 N·m (210 kgf·cm, 15 ft·lbf)

27. INSTALL OIL COOLER (See page LU-22)

28. INSTALL CYLINDER HEAD (See page EM-47)

29. INSTALL TIMING PULLEYS AND BELT (See page EM-21)

30. INSTALL GENERATOR (See page CH-18)

31. REMOVE ENGINE STAND FROM ENGINE

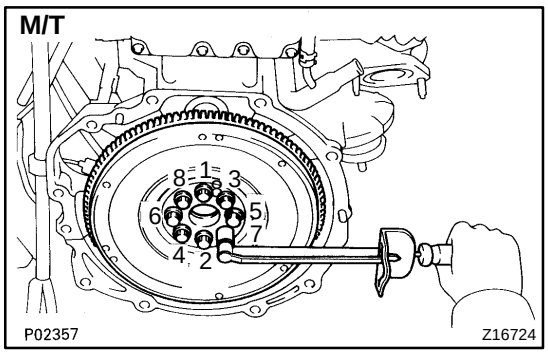

32. M/T:
INSTALL FLYWHEEL

HINT:
The flywheel bolts are tightened in 2 progressive step, (b) and (d).

(a) Install the flywheel on the crankshaft.
(b) Install and uniformly tighten the 8 bolts, in several passes, in the sequence shown.
Torque: 49 N·m (500 kgf·cm, 36 ft·lbf)

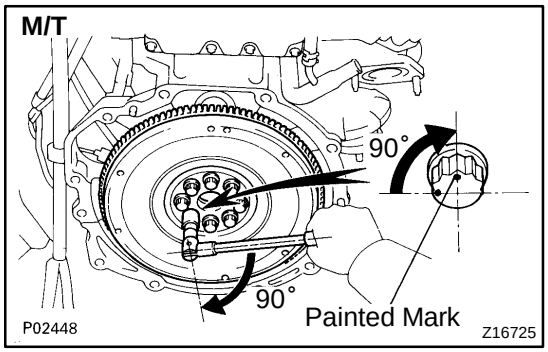

(c) Mark the flywheel bolt with paint.
(d) Retighten the flywheel bolts by an additional 90°.
(e) Check that the painted mark is now at a 90° angle to (d).

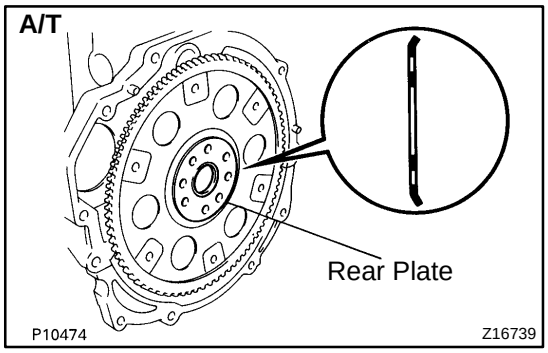

33. A/T:
INSTALL DRIVE PLATE

(a) Install the front spacer, drive plate and rear plate on the crankshaft.

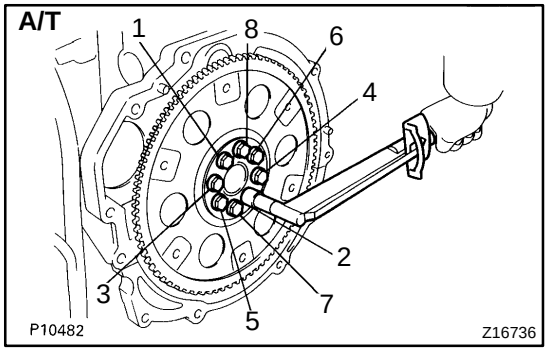

(b) Apply adhesive to 2 or 3 threads of the mounting bolt end.
Adhesive:
Part No. 08833-00070, THREE BOND 1324 or equivalent
(c) Install and uniformly tighten the 8 bolts, in several passes, in the sequence shown.
Torque: 83 N·m (850 kgf·cm, 61 ft·lbf)

EXHAUST SYSTEM

COMPONENTS

EM0AS-02

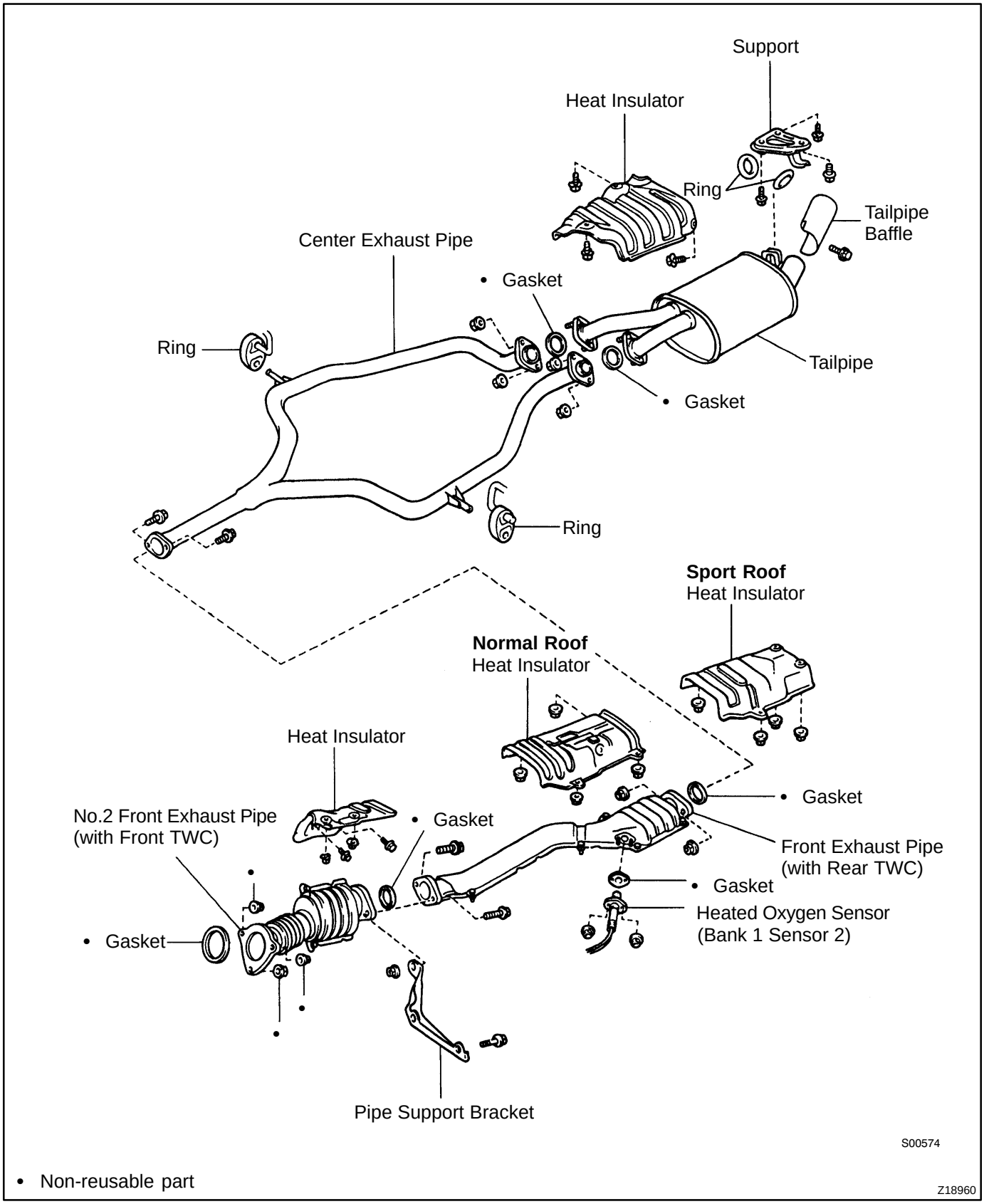

• Non-reusable part

Z18960

PP0QF-01

EQUIPMENT

OBDII scan tool	Engine speed
Caliper gauge	
CO/HC meter	
Compression gauge	
Connecting rod aligner	
Cylinder gauge	
Dial indicator	
Dye penetrant	
Engine tune-up tester	
Heater	
Micrometer	
Mirror	
Magnetic finger	
Piston ring compressor	
Piston ring expander	
Plastigage	
Precision straight edge	
Spring tester	Valve spring
Steel square	Valve spring
Thermometer	
Torque wrench	
Valve seat cutter	
Vernier calipers	
V-block	

CO/HC

EM0A7-02

INSPECTION

HINT:

This check is used only to determine whether or not the idle CO/HC complies with regulations.

1. INITIAL CONDITIONS

(a) Engine at normal operating temperature

(b) Air cleaner installed

(c) All pipes and hoses of air induction system connected

(d) All accessories switched OFF

(e) All vacuum lines properly connected

HINT:

All vacuum hoses for EGR system, etc. should be properly connected.

(f) SFI system wiring connectors fully plugged

(g) Ignition timing checked correctly

(h) Transmission in neutral position

(i) Tachometer and CO/HC meter calibrated by hand

2. START ENGINE

3. RACE ENGINE AT 2,500 RPM FOR APPROX. 180 SECONDS

4. INSERT CO/HC METER TESTING PROBE AT LEAST 40 cm (1.3 ft) INTO TAILPIPE DURING IDLING

5. IMMEDIATELY CHECK CO/HC CONCENTRATION AT IDLE AND/OR 2,500 RPM

HINT:

When performing the 2 mode (2,500 rpm and idle) test, follow the measurement order prescribed by the applicable local regulations.

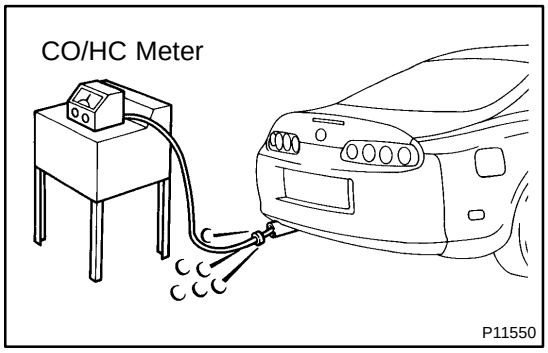

If the CO/HC concentration does not comply with regulations, troubleshoot in the order given below.

(1) Check heated oxygen sensors operation.
(See page SF-82)

(2) See the table below for possible causes, and then inspect and correct the applicable causes if necessary.

CO	HC	Phenomenon	Causes
Normal	High	Rough idle	1. Faulty ignitions: • Incorrect timing • Fouled, shorted or improperly gapped plugs 2. Incorrect valve clearance 3. Leaky EGR valve 4.Leaky intake and exhaust valves 5.Leaky cylinder
Low	High	Rough idle (Fluctuating HC reading)	1. Vacuum leaks: • PCV hose • EGR valve • Intake manifold • Air intake chamber • Throttle body • IAC valve • Brake booster line 2. Lean mixture causing misfire
High	High	Rough idle (Black smoke from exhaust)	1. Restricted air filter: 2. Faulty SFI system: • Faulty fuel pressure regulator • Clogged fuel return line • Defective ECT sensor • Defective turbo pressure sensor • Faulty ECM • Faulty injector • Faulty throttle position sensor • Faulty MAF meter

COMPRESSION

EM0A8-02

INSPECTION

HINT:

If there is lack of power, excessive oil consumption or poor fuel economy, measure the compression pressure.

1. WARM UP AND STOP ENGINE

Allow the engine to warm up to normal operating temperature.

2. DISCONNECT CAMSHAFT POSITION SENSOR CONNECTORS

3. REMOVE IGNITION COILS ASSEMBLIES

(See page IG-6)

4. REMOVE SPARK PLUGS

5. CHECK CYLINDER COMPRESSION

(a) Insert a compression tester into the spark plug hole.

(b) While cranking the engine, measure the compression pressure.

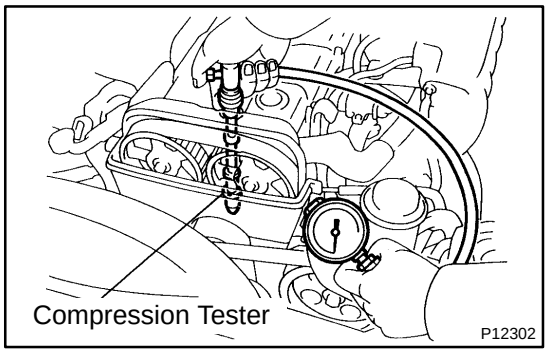

HINT:

Always use a fully charged battery to obtain engine revolutions of 250 rpm or more.

(c) Repeat steps (a) through (b) for each cylinder.

NOTICE:

This measurement must be done in as short a time as possible.

Standard pressure:
1,079 kPa (11.0 kgf/cm^2, 156 psi) or more
Minimum pressure:
883 kPa (9.0 kgf/cm^2, 128 psi)
Difference between each cylinder:
98 kPa (1.0 kgf/cm^2, 14 psi) or less

(d) If the cylinder compression in 1 or more cylinders is low, pour a small amount of engine oil into the cylinder through the spark plug hole and repeat steps (a) through (b) for the cylinder with low compression.

- If adding oil helps the compression, it is likely that the piston rings and/or cylinder bore are probably worn or damaged.
- If pressure stays low, a valve may be sticking or seating improper, or there may be leakage past the gasket.

6. REINSTALL SPARK PLUGS

7. REINSTALL IGNITION COILS ASSEMBLIES

(See page IG-7)

8. RECONNECT CAMSHAFT POSITION SENSOR CONNECTORS

IDLE SPEED

EM0AB-01

INSPECTION

1. INITIAL CONDITIONS

(a) Engine at normal operating temperature
(b) Air cleaner installed
(c) All pipes and hoses of air induction system connected
(d) All accessories switched OFF
(e) All vacuum lines properly connected

HINT:

All vacuum hoses for EGR system, etc. should be properly connected.

(f) SFI system wiring connectors fully plugged
(g) Ignition timing checked correctly
(h) Transmission in neutral position

2. CONNECT TOYOTA HAND-HELD TESTER OR OBDII SCAN TOO (See page EM-11)

3. INSPECT IDLE SPEED

(a) Race the engine speed at 2,500 rpm for approx. 90 seconds.
(b) Check the idle speed.

Idle speed: 650 ± 50 rpm

If the idle speed is not as specified, check the IAC valve.

4. DISCONNECT TOYOTA HAND-HELD TESTER OR OBDII SCAN TOOL

IGNITION TIMING

EM0AA-02

INSPECTION

1. WARM UP ENGINE

Allow the engine to warm up to normal operating temperature.

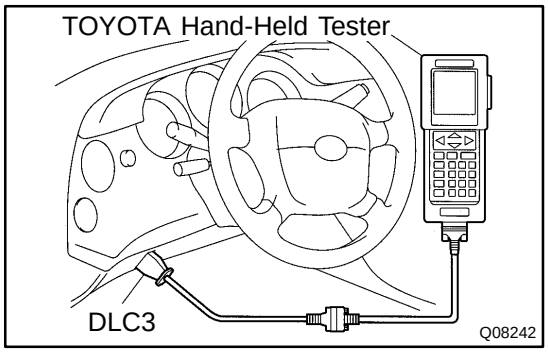

2. CONNECT TOYOTA HAND-HELD TESTER OR OBDII SCAN TOOL

(a) Connect the TOYOTA hand-held tester or OBDII scan tool to the DLC3.

(b) Please refer to the TOYOTA hand-held tester or OBDII scan tool operator's manual for further details.

3. CONNECT TIMING LIGHT TO ENGINE

4. CHECK IDLE SPEED

(a) Race the engine speed at 2,500 rpm for approx. 90 seconds.

(b) Check the idle speed.
Idle speed: 650 ± 50 rpm

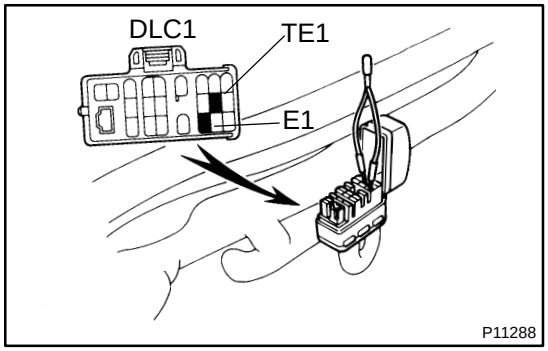

5. INSPECT IGNITION TIMING

(a) Using SST, connect terminals TE1 and E1 of the DLC1.
SST 09843-18020

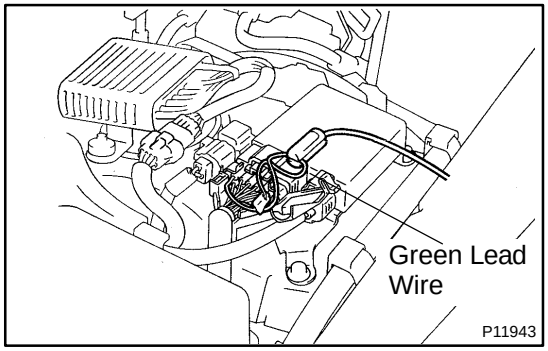

(b) Open the igniter connector cover and remove the green lead wire.

(c) Connect the timing light clip to the green lead wire.

NOTICE:

- **Use a timing light that can detect the primary signal.**
- **After finishing the inspection, make sure the lead wire is stored inside the connector cover.**

(d) Using a timing light, check the ignition timing.
Ignition timing: 10 ± 2° BTDC @ idle
(Transmission in neutral position)

(e) Remove the SST from the DLC1.
SST 09843-18020

6. FURTHER CHECK IGNITION TIMING
Ignition timing: 10 - 20˚ BTDC @ idle
(Transmission in neutral position)

HINT:
The timing mark moves in a range between 10˚ and 20˚.

7. DISCONNECT TIMING LIGHT FROM ENGINE

8. DISCONNECT TOYOTA HAND- HELD TESTER OR OBDII SCAN TOOL

EM0AE-02

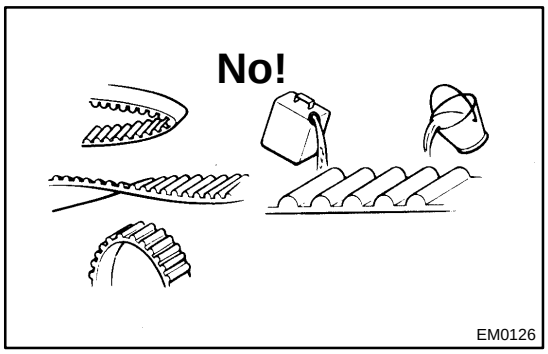

INSPECTION

1. INSPECT TIMING BELT

NOTICE:

- **Do not bend, twist or turn the timing belt inside out.**
- **Do not allow the timing belt to come into contact with oil, water or steam.**
- **Do not utilize timing belt tension when installing or removing the mount bolt of the camshaft timing pulley.**

If there are any defects, as shown in the illustrations, check the following points.

(a) Premature parting
- Check for proper installation.
- Check the timing cover gasket for damage and proper installation.

(b) If the belt teeth are cracked or damaged, check to see if either camshaft is locked.

(c) If there is noticeable wear or cracks on the belt face, check to see if there are nicks on the side of the idler pulley lock.

(d) If there is wear or damage on only one side of the belt, check the belt guide and the alignment of each pulley.

(e) If there is noticeable wear on the belt teeth, check timing cover for damage and check gasket has been installed correctly and for foreign material on the pulley teeth.

If necessary, replace the timing belt.

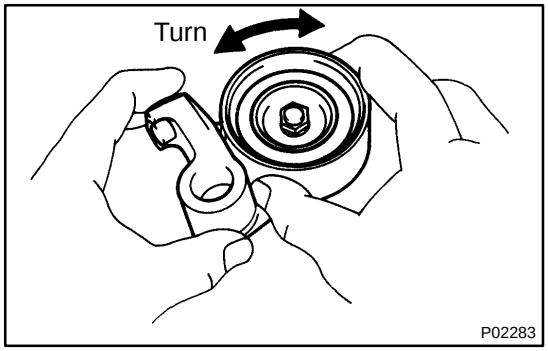

2. INSPECT IDLER PULLEY

(a) Check the turning smoothness of the idler pulley.

If necessary, replace the idler pulley.

(b) Check the turning smoothness of the tensioner.

If necessary, replace the tensioner.

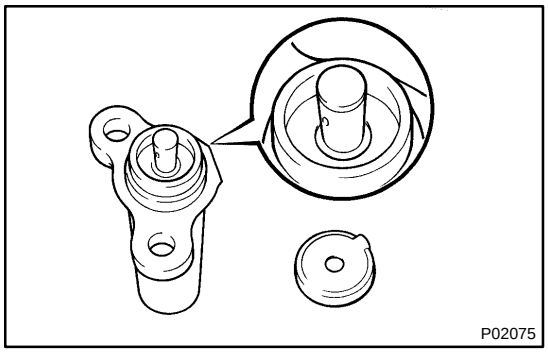

3. INSPECT TIMING BELT TENSIONER

(a) Visually check tensioner for oil leakage.

HINT:

If there is only the faintest trace of oil on the seal on the push rod side, the tensioner is all right.

If leakage is found, replace tensioner.

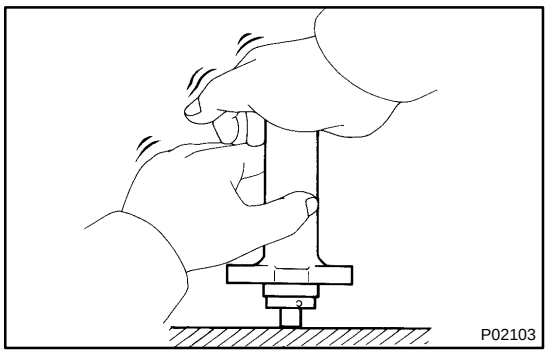

(b) Hold the tensioner with both hands and push the push rod strongly against the floor or wall to check that it doesn't move.

If the push rod moves, replace the tensioner.

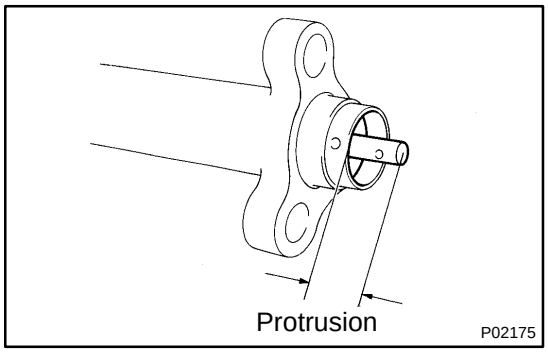

(c) Measure the protrusion of the push rod from the housing end.

Protrusion: 8.0 - 8.8 mm (0.315 - 0.346 in.)

If the protrusion is not as specified, replace the tensioner.

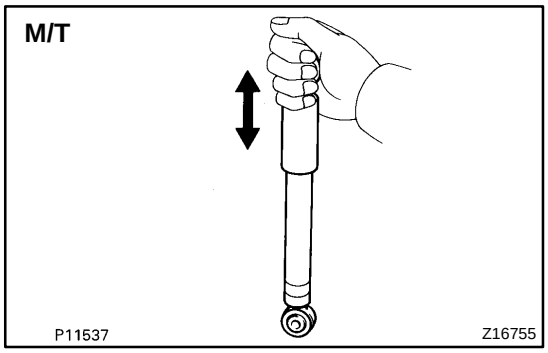

4. M/T:

INSPECT DRIVE BELT TENSION DAMPER

Compress and extend the tension damper rod and check that there is no abnormal resistance or unusual operation sounds. If there is any abnormality, replace the tension damper with a new one.

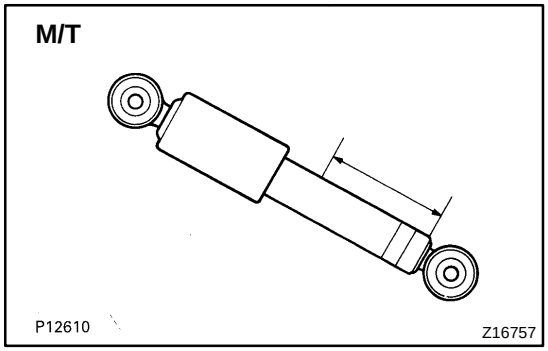

NOTICE:

When discarding the tension damper, use the following procedure.

- **Fully extend the damper rod.**
- **Using a drill, make a hole in the cylinder as shown to release the gas inside.**

CAUTION:

The gas coming out is harmless, but be careful of the chips which may fly up when drilling.

VALVE CLEARANCE

INSPECTION

EM0A9-02

HINT:

Inspect and adjust the valve clearance when the engine is cold.

1. REMOVE IGNITION COILS ASSEMBLIES
(See page IG-6)

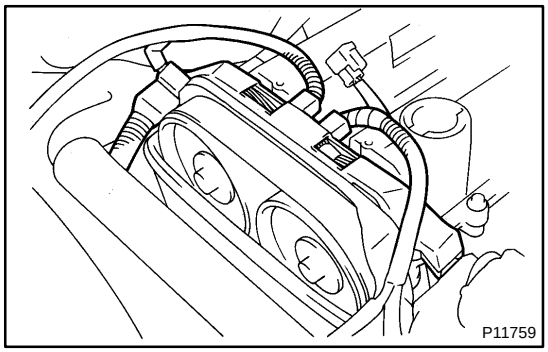

2. DISCONNECT ENGINE WIRE PROTECTOR FROM NO.4 TIMING BELT COVER

(a) Disconnect the engine wire from the 4 wire clamps.
(b) Lift out the engine wire protector from the cylinder head covers.

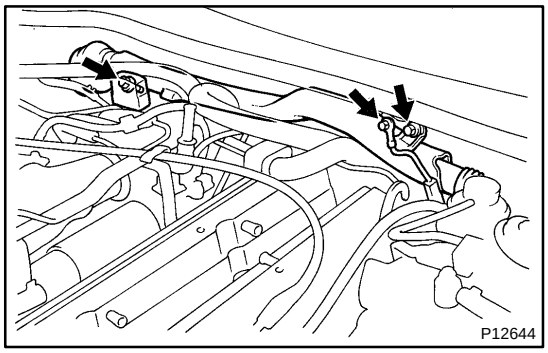

3. DISCONNECT ENGINE WIRE PROTECTOR FROM COWL TOP PANEL

(a) Remove the bolt, and disconnect the ground strap.
(b) Remove the 2 bolts, and lift up the engine wire protector.

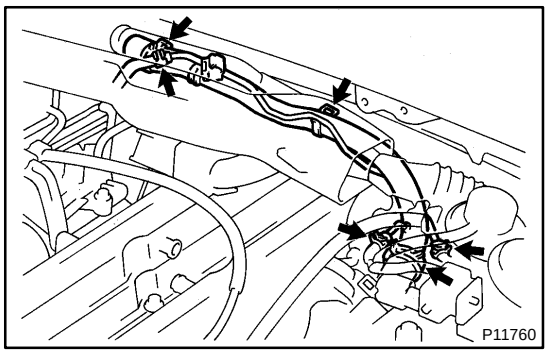

4. REMOVE IAC VALVE PIPE

(a) Disconnect the 5 air hoses from the IAC valve pipe.
(b) Remove the IAC valve pipe from the pipe clamp on the No.1 cylinder head cover.

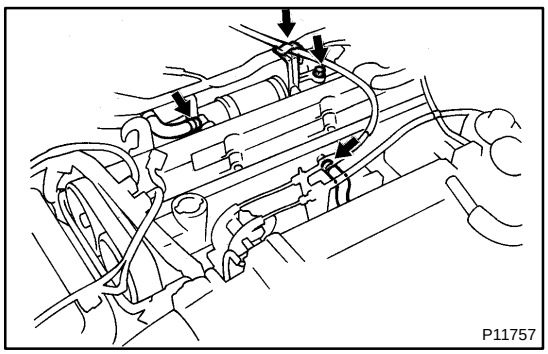

5. REMOVE NO.1 AND NO.2 CYLINDER HEAD COVERS

(a) Disconnect the cruise control actuator cable from the cable bracket.
(b) Remove the bolt holding the VSV to the turbo outlet duct.
(c) Disconnect the 2 PCV hoses from the cylinder head covers.

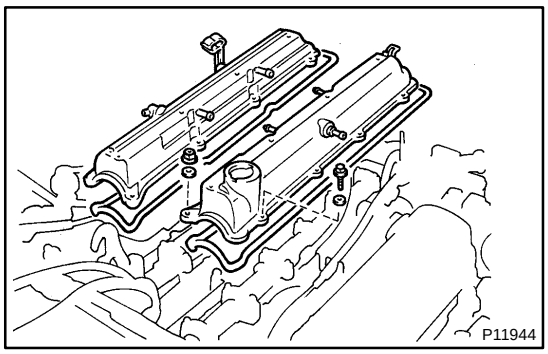

(d) Remove the 6 bolts, 2 nuts, 8 seal washers, No.1 cylinder head cover and gasket.

(e) Remove the 6 bolts, 2 nuts, 8 seal washers, No.2 cylinder head cover and gasket.

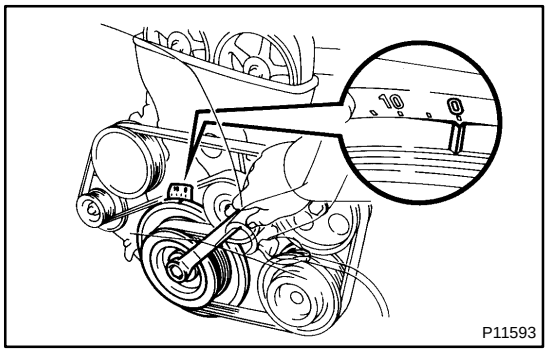

6. SET NO.1 CYLINDER TO TDC/COMPRESSIO

(a) Turn the crankshaft pulley, and align its groove with timing mark ”0” of the No.1 timing belt cover.

NOTICE:

Always turn the crankshaft clockwise.

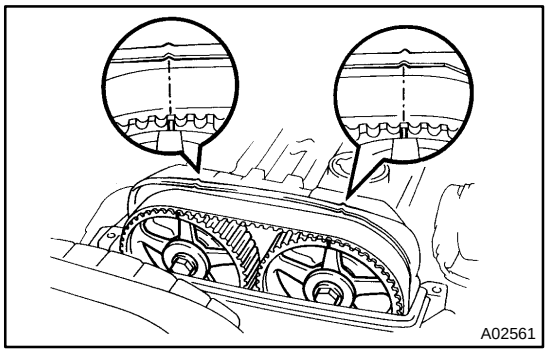

(b) Check that the timing marks of the camshaft timing pulleys are aligned with the timing marks of the No.4 timing belt cover.

If not, turn the crankshaft 1 revolution (360˚).

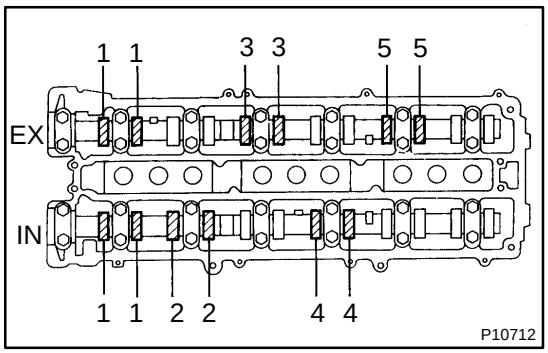

7. INSPECT VALVE CLEARANCE

(a) Check only those valves indicated in the illustration.

- Using a feeler gauge, measure the clearance between the valve lifter and camshaft.
- Record the valve clearance measurements of those that are out of specification. They will be used later to determine the required replacement adjusting shim.

Valve clearance (Cold):

Intake 0.15 - 0.25 mm (0.006 - 0.010 in.)

Exhaust 0.25 - 0.35 mm (0.010 - 0.014 in.)

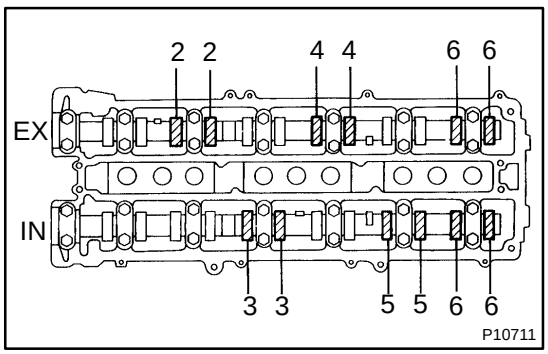

(b) Turn the crankshaft pulley 1 revolution (360˚), and align the groove with timing mark ”0” of the No.1 timing belt cover.

(c) Check only the valves indicated as shown. Measure the valve clearance. (See procedure in step (a))

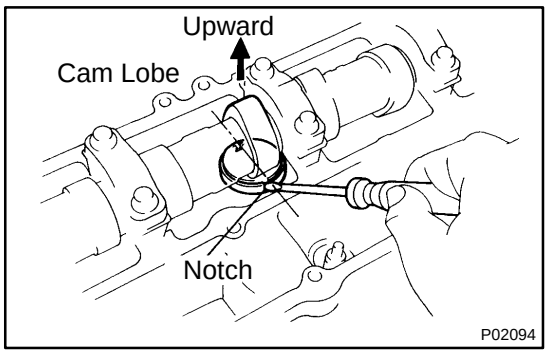

8. ADJUST VALVE CLEARANCE

(a) Remove the adjusting shim.

- Turn the camshaft so that the cam lobe for the valve to be adjusted faces up.
- Turn the valve lifter with a screwdriver so that the notches are perpendicular to the camshaft.

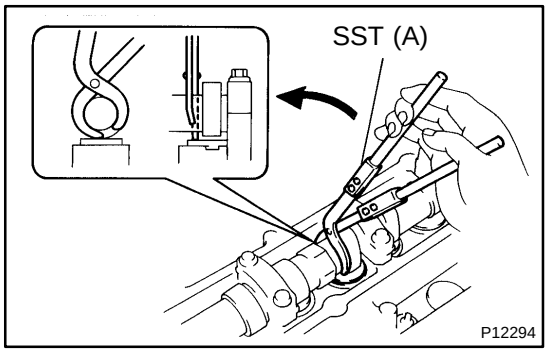

- Using SST (A), hold the camshaft as shown in the illustration.

SST 09248-55040 (09248-05410)

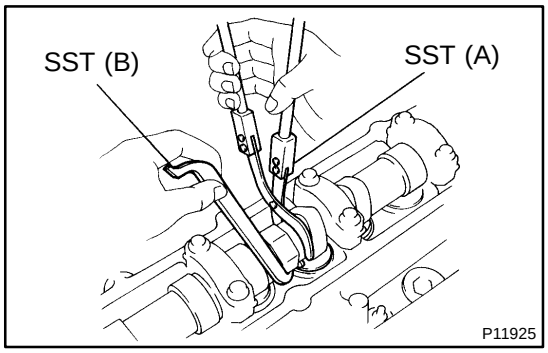

- Using SST (A), press down the valve lifter and place SST (B) between the camshaft and valve lifter. Remove SST (A).

SST 09248-55040 (09248-05410, 09248-05420)

HINT:

- Apply SST (B) at slight angle on the side marked with ”7”, at the position shown in the illustration

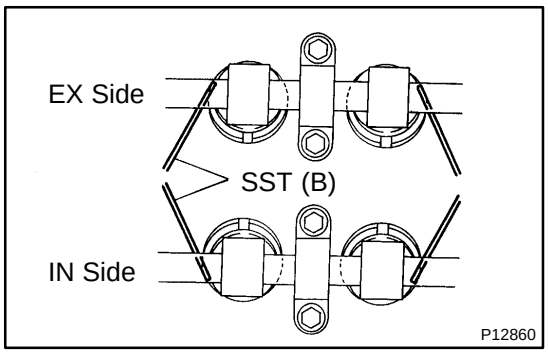

- Insert SST (B) gently from the inside as shown in the illustration.

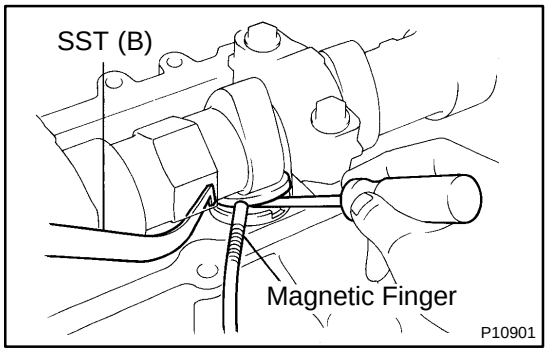

- Using a small screwdriver and a magnetic finger, remove the adjusting shim.

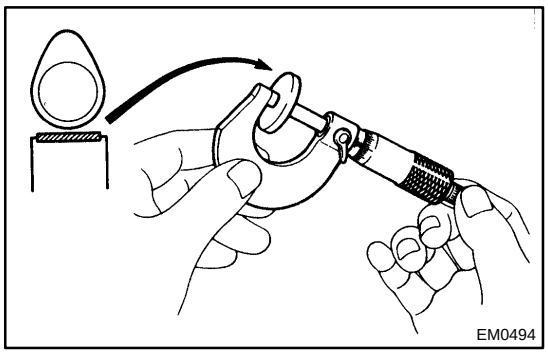

(b) Determine the replacement adjusting shim size according to the following Formula or Charts:
- Using a micrometer, measure the thickness of the removed shim.
- Calculate the thickness of a new shim so the valve clearance comes within specified value.

T ..... Thickness of used shim
A ..... Measured valve clearance
N ..... Thickness of new shim

Intake
N = T + (A - 0.20 mm (0.008 in.))
Exhaust
N = T + (A - 0.30 mm (0.012 in.))

- Select a new shim with a thickness as close as possible to the calculated values.

HINT:
Shims are available in 17 sizes in increments of 0.050 mm (0.0020 in.), from 2.500 mm (0.0984 in.) to 3.300 mm (0.1299 in.).

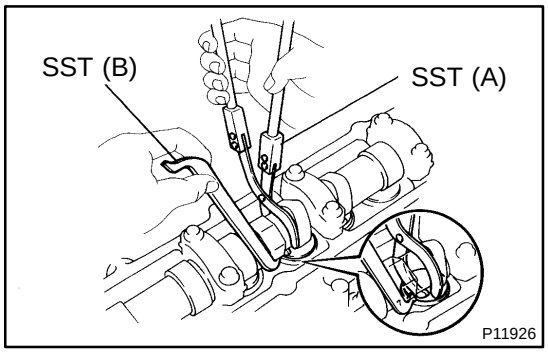

(c) Install a new adjusting shim.
- Place a new adjusting shim on the valve lifter, with imprinted numbers facing down.
- Press down the valve lifter with SST (A), and remove SST (B).

SST 09248-55040

(d) Recheck the valve clearance.

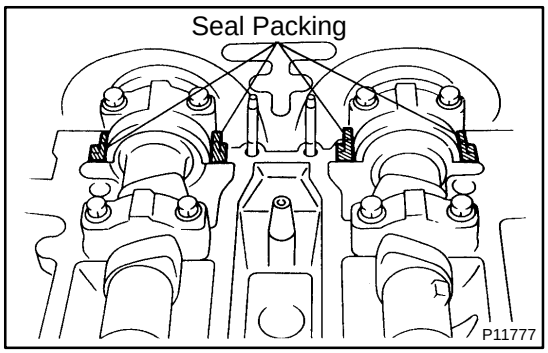

9. REINSTALL NO.1 AND NO.2 CYLINDER HEAD COVERS

(a) Remove any old packing (FIPG) material.
(b) Apply seal packing to the cylinder head as shown in the illustration.
Seal packing:
Part No. 08826-00080 or equivalent
(c) Install the gaskets to the No.1 and No.2 cylinder head covers.
(d) Install the 12 seal washers to the bolts.
(e) Install the No.2 cylinder head cover with the 6 bolts, 4 seal washers and 4 nuts..
Torque: 5.4 N·m (55 kgf·cm, 48 in.·lbf)
(f) Install the No.1 cylinder head cover with the 6 bolts, 4 seal washers and 4 nuts..
Torque: 5.4 N·m (55 kgf·cm, 48 in.·lbf)
(g) Connect the 2 PCV hoses to the cylinder head covers.
(h) Install the bolt holding the VSV to the turbo outlet duct.
(i) Connect the cruise control actuator cable to the cable bracket.

10. **RECONNECT ENGINE WIRE PROTECTOR TO NO.4 TIMING BELT COVER**
11. **REINSTALL IAC VALVE PIPE**
12. **RECONNECT ENGINE WIRE PROTECTOR TO COWL TOP PANEL**
13. **REINSTALL IGNITION COILS ASSEMBLIES**
    (See page IG-7)

Adjusting Shim Selection Chart (Intake)

| Measured clearance mm (in.) \ Installed shim thickness mm (in.) | 2.500 (0.0984) | 2.520 (0.0992) | 2.540 (0.1000) | 2.550 (0.1004) | 2.560 (0.1008) | 2.580 (0.1016) | 2.600 (0.1024) | 2.620 (0.1031) | 2.640 (0.1039) | 2.650 (0.1043) | 2.660 (0.1047) | 2.670 (0.1051) | 2.680 (0.1055) | 2.690 (0.1059) | 2.700 (0.1063) | 2.710 (0.1067) | 2.720 (0.1071) | 2.730 (0.1075) | 2.740 (0.1079) | 2.750 (0.1083) | 2.760 (0.1087) | 2.770 (0.1091) | 2.780 (0.1094) | 2.790 (0.1098) | 2.800 (0.1102) | 2.810 (0.1106) | 2.820 (0.1110) | 2.830 (0.1114) | 2.840 (0.1118) | 2.850 (0.1122) | 2.860 (0.1126) | 2.870 (0.1130) | 2.880 (0.1134) | 2.890 (0.1138) | 2.900 (0.1142) | 2.910 (0.1146) | 2.920 (0.1150) | 2.930 (0.1154) | 2.940 (0.1157) | 2.950 (0.1161) | 2.960 (0.1165) | 2.970 (0.1169) | 2.980 (0.1173) | 2.990 (0.1177) | 3.000 (0.1181) | 3.010 (0.1185) | 3.020 (0.1189) | 3.030 (0.1193) | 3.040 (0.1197) | 3.050 (0.1201) | 3.060 (0.1205) | 3.080 (0.1213) | 3.100 (0.1220) | 3.120 (0.1228) | 3.140 (0.1236) | 3.150 (0.1240) | 3.160 (0.1244) | 3.180 (0.1252) | 3.200 (0.1260) | 3.220 (0.1268) | 3.240 (0.1276) | 3.250 (0.1280) | 3.260 (0.1283) | 3.280 (0.1291) | 3.300 (0.1299) |
|---|---|---

Adjusting Shim Selection Chart (Exhaust)

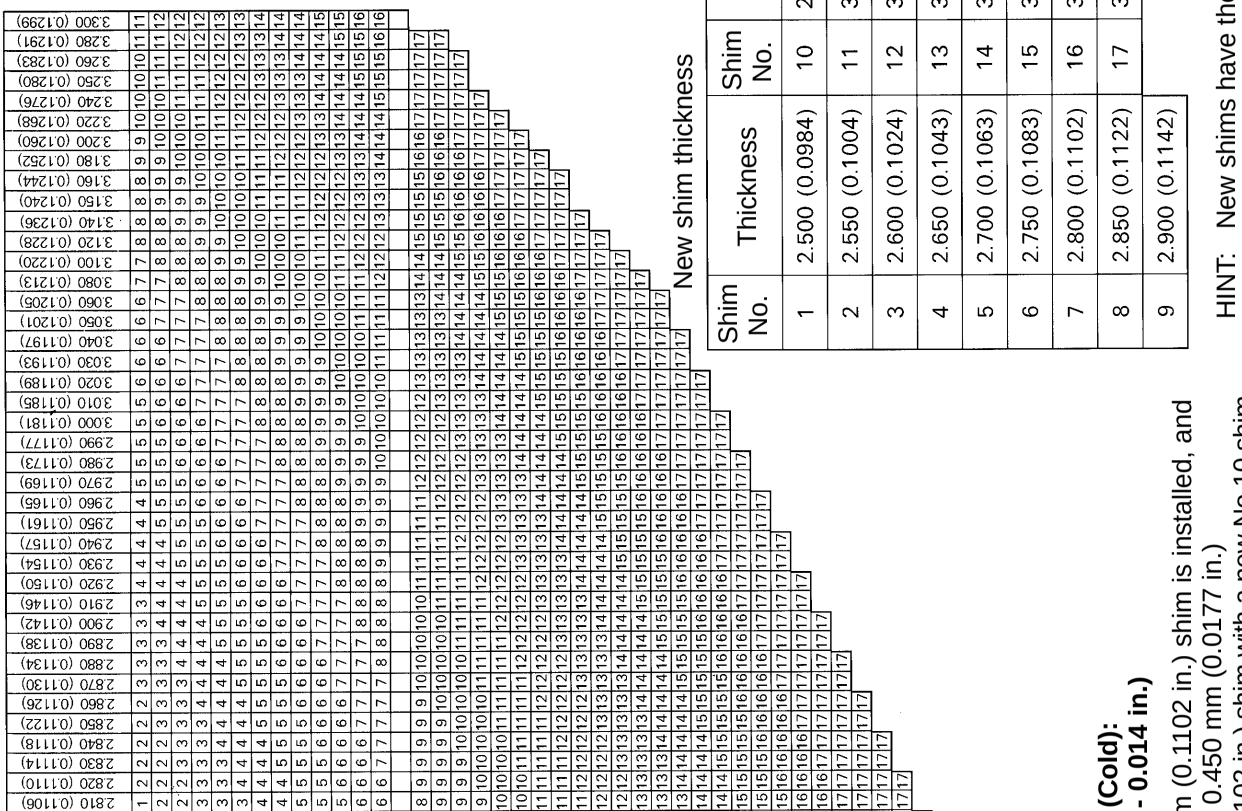

Shim No.	Thickness	Shim No.	Thickness
1	2.500 (0.0984)	10	2.950 (0.1161)
2	2.550 (0.1004)	11	3.000 (0.1181)
3	2.600 (0.1024)	12	3.050 (0.1201)
4	2.650 (0.1043)	13	3.100 (0.1220)
5	2.700 (0.1063)	14	3.150 (0.1240)
6	2.750 (0.1083)	15	3.200 (0.1260)
7	2.800 (0.1102)	16	3.250 (0.1280)
8	2.850 (0.1122)	17	3.300 (0.1299)
9	2.900 (0.1142)		

New shim thickness mm (in.)

Exhaust valve clearance (Cold):
0.25 - 0.35 mm (0.010 - 0.014 in.)

EXAMPLE: The 2.800 mm (0.1102 in.) shim is installed, and the measured clearance is 0.450 mm (0.0177 in.)
Replace the 2.800 mm (0.1102 in.) shim with a new No.10 shim.

HINT: New shims have the thickness in millimeters imprinted on the face.

V00720

EM0AF-02

INSTALLATION

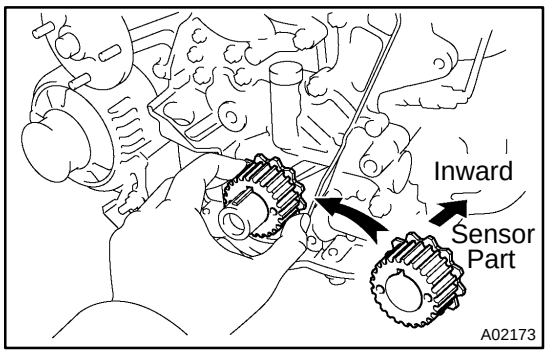

1. INSTALL CRANKSHAFT TIMING PULLEY

(a) Align the pulley set key with the key groove of the pulley.

(b) Slide on the timing pulley facing the flange side inward.

NOTICE:

Do not scratch the sensor part of the crankshaft timing pulley.

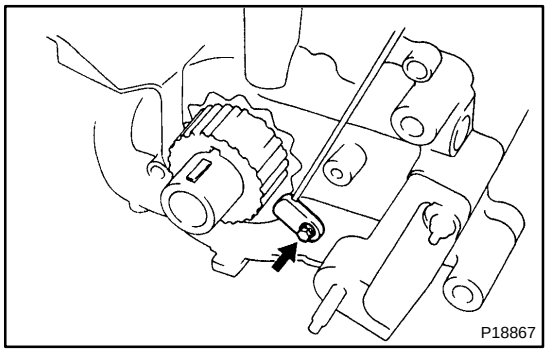

(c) Install the timing belt plate with the bolt.
Torque: 7.8 N·m (80 kgf·cm, 69 in.·lbf)

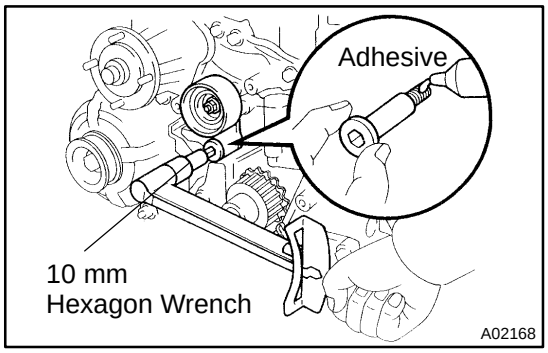

2. INSTALL IDLER PULLEY

(a) Apply adhesive to 2 or 3 threads of the pivot bolt.
Adhesive:
Part No. 08833-00080, THREE BOND 1344, LOCTITE 242 or equivalent

(b) Using a 10 mm hexagon wrench, install the plate washer and pulley with the pivot bolt.
Torque: 35 N·m (350 kgf·cm, 26 ft·lbf)

(c) Check that the pulley bracket moves smoothly.

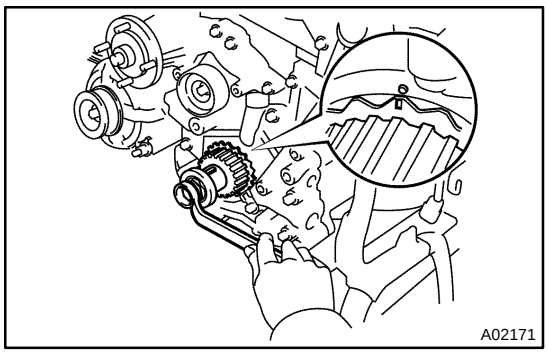

3. TEMPORARILY INSTALL TIMING BELT

NOTICE:

The engine should be cold.

(a) Using the crankshaft pulley bolt, turn the crankshaft, and align the timing marks on the crankshaft timing pulley and on the oil pump body.

(b) Remove any oil or water on the crankshaft timing pulley and idler pulley, and keep them clean.

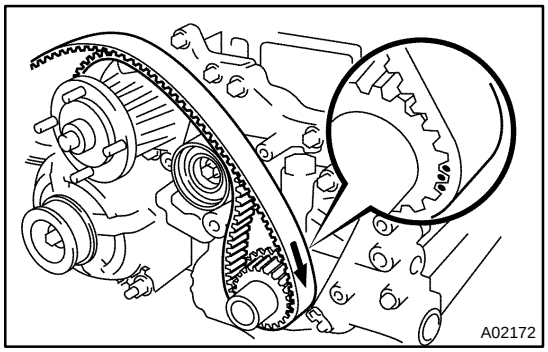

(c) Install the timing belt on the crankshaft timing pulley and idler pulley.

HINT:

(When re-using timing belt):

Align the match marks of the crankshaft timing pulley and timing belt, and install the belt with the arrow pointing in the direction of engine revolution.

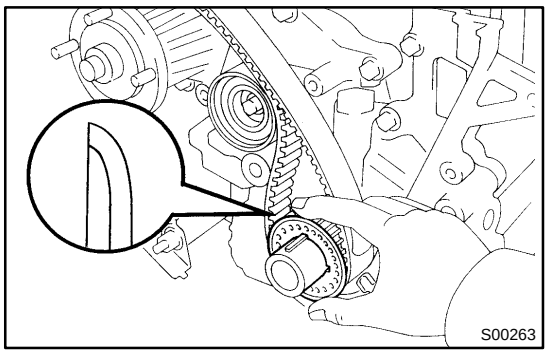

4. INSTALL TIMING BELT GUIDE

Install the guide, facing the cup side outward.

5. INSTALL NO.1 TIMING BELT COVER

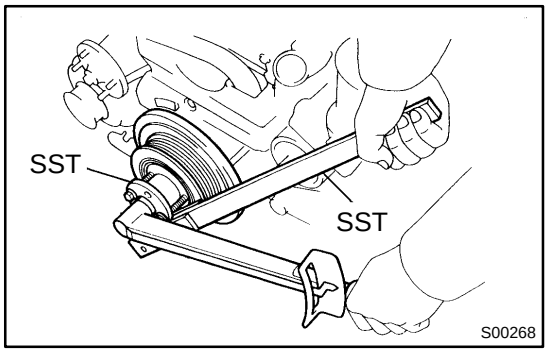

6. INSTALL CRANKSHAFT PULLEY

(a) Align the pulley set key with the key groove of the pulley, and slide on the pulley.

(b) Using SST, install the bolt.
SST 09213-70010, 09330-00021
Torque: 324 N·m (3,300 kgf·cm, 239 ft·lbf)

7. A/T:
CONNECT OIL COOLER TUBES

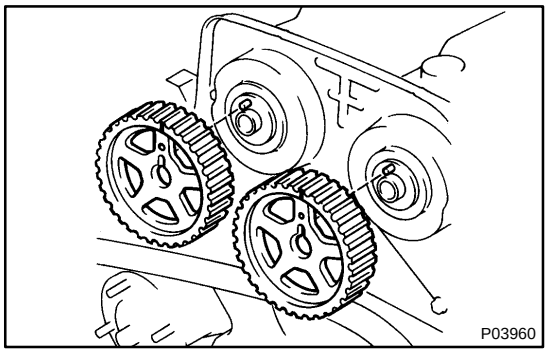

8. INSTALL CAMSHAFT TIMING PULLEYS

(a) Align the camshaft knock pin with the groove of the pulley, and slide on the timing pulley.

(b) Temporarily install the timing pulley bolt.

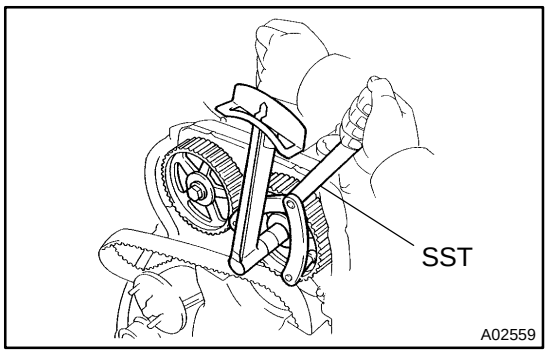

(c) Using SST, tighten the pulley bolt.
SST 09960-10010 (09962-01000, 09963-01000)
Torque: 79 N·m (810 kgf·cm, 59 ft·lbf)

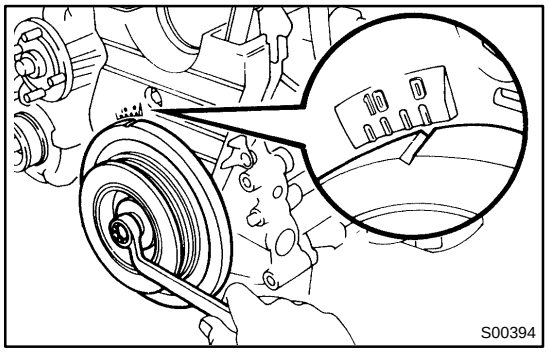

9. SET NO.1 CYLINDER TO TDC/COMPRESSION

(a) Turn the crankshaft pulley, and align its groove with timing mark ”0” of the No.1 timing belt cover.

NOTICE:
Always turn the crankshaft clockwise.

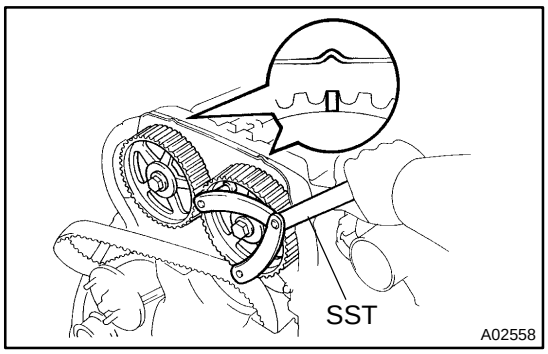

(b) Using SST, align the timing marks of the camshaft timing pulleys and No.4 timing belt cover.
SST 09960-10010 (09962-01000, 09963-01000)

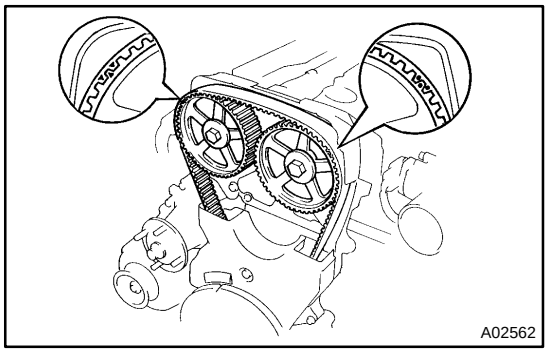

10. INSTALL TIMING BELT

HINT:

(When re-using timing belt):

Align the matchmarks of the timing belt and camshaft timing pulleys.

(a) Remove any oil or water on the camshaft timing pulley, and keep it clean.

(b) Install the timing belt, checking the tension between the crankshaft timing pulley and exhaust camshaft timing pulley.

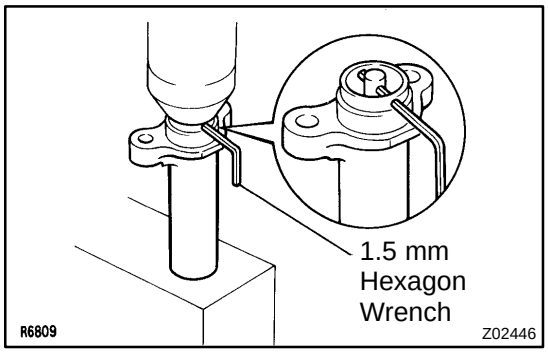

11. SET TIMING BELT TENSIONER

(a) Using a press, slowly press in the push rod using 981 - 9,807 N (100 - 1,000 kgf, 220 - 2,205 lbf) of force.

(b) Align the holes of the push rod and housing, pass a 1.5 mm hexagon wrench through the holes to keep the push rod retracted.

(c) Release the press.

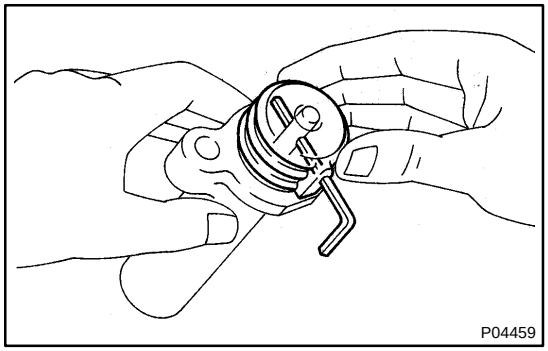

(d) Install the dust boot onto the tensioner.

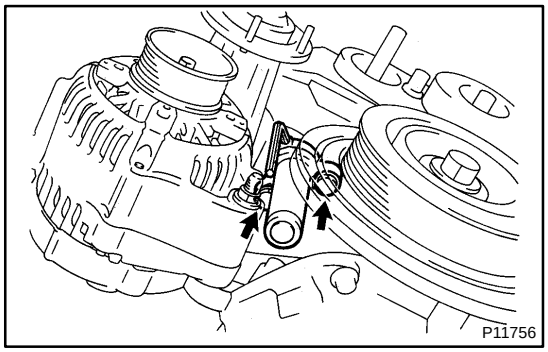

12. INSTALL TIMING BELT TENSIONER

(a) Temporarily install the tensioner with the 2 bolts.

(b) Alternately tighten the 2 bolts.
Torque: 26 N·m (270 kgf·cm, 20 ft·lbf)

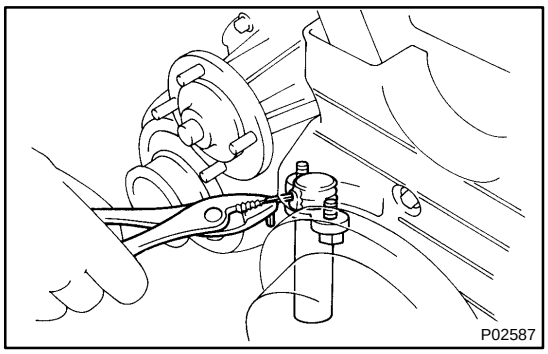

(c) Remove the 1.5 mm hexagon wrench from the tensioner.

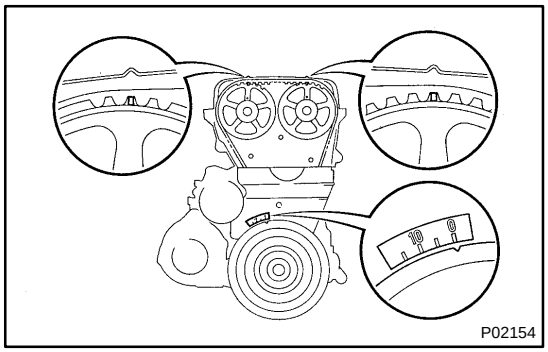

13. CHECK VALVE TIMING

(a) Slowly turn the crankshaft pulley 2 revolutions from TDC to TDC.

NOTICE:

Always turn the crankshaft clockwise.

(b) Check that each pulley aligns with the timing marks as shown in the illustration.

If the marks do not align, remove the timing belt and reinstall it.

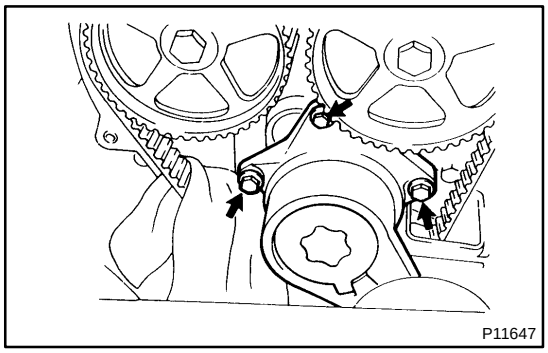

14. INSTALL DRIVE BELT TENSIONER

Install the tensioner with the 3 bolts.

Torque: 21 N·m (210 kgf·cm, 15 ft·lbf)

NOTICE:

Be careful not to drop the bolts inside the timing belt cover.

15. INSTALL NO.2 TIMING BELT COVER

16. INSTALL NO.3 TIMING BELT COVER

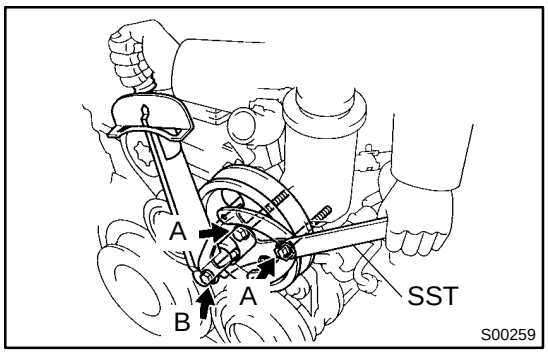

17. INSTALL PS PUMP

(a) Temporarily install the pump pulley with the nut.

(b) Using SST, tighten the pulley nut.

SST 09960-10010 (09962-01000, 09963-01000)

Torque: 43 N·m (440 kgf·cm, 32 ft·lbf)

18. INSTALL WATER PUMP PULLEY, FAN, FLUID COUPLING ASSEMBLY AND DRIVE BELT

(See page CO-11)

19. M/T:

INSTALL DRIVE BELT TENSIONER DAMPER

Torque: 20 N·m (200 kgf·cm, 14 ft·lbf)

20. INSTALL RADIATOR ASSEMBLY

(See page CO-28)

21. ROAD TEST

Check for abnormal noise, shock, slippage, correct shift points and smooth operation.

2JZ-GE

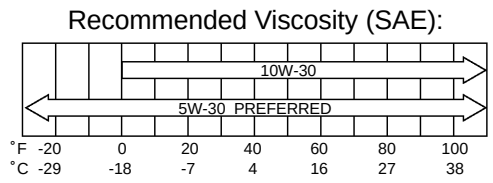

TEMPERATURE RANGE ANTICIPATED BEFORE NEXT OIL CHANGE

B00319

2JZ-GTE

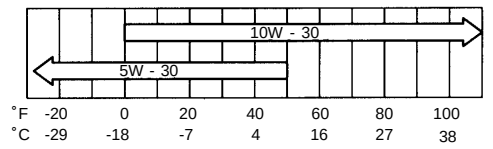

TEMPERATURE RANGE ANTICIPATED BEFORE NEXT OIL CHANGE

P02028

Z09522

OIL AND FILTER

LU0JY-01

INSPECTION

1. CHECK OIL QUALITY

Check the oil for deterioration, entry of water, discoloring or thinning.

If oil quality is visibly poor, replace the oil.

Oil grade (2JZ-GE):

API grade SH Energy-Conserving II or SJ, Energy-Conserving or ILSAC multigrade engine oil.

SAE 5W-30 is the best choice for your vehicle, for good fuel economy, and good starting in cold weather.

Oil grade (2JZ-GTE):

API grade SH Energy-Conserving II or SJ, Energy-Conserving or ILSAC multigrade engine oil.

Recommended viscosity is as shown in the illustration.

2JZ-GTE

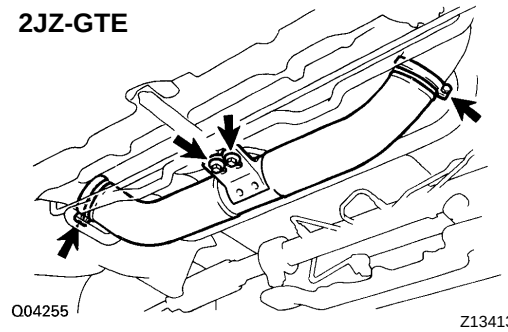

Q04255

Z13413

2. CHECK ENGINE OIL LEVEL

The oil level should be between the low level and full level marks on the dipstick.

If low, check for the leakage and add oil up to full level mark.

3. REMOVE ENGINE UNDER COVER

4. 2JZ-GTE:

REMOVE NO.2 AIR TUBE

Loosen the 2 hose clamps, and remove 2 bolts and air tube.

2JZ-GTE M/T

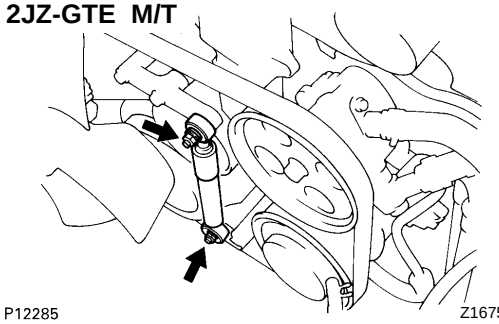

P12285

Z16754

5. 2JZ-GTE M/T:

REMOVE DRIVE BELT TENSION DAMPER

Remove the 2 nuts and tensioner damper.

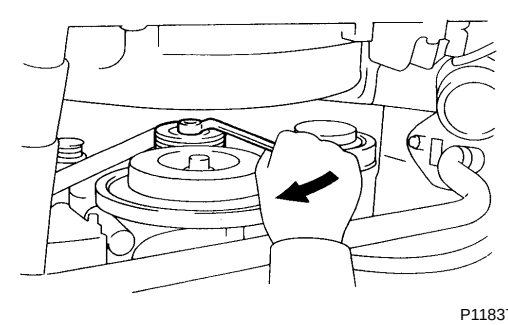

P11837

6. REMOVE DRIVE BELT

Loosen the drive belt tension by turning the drive belt tensioner clockwise, and remove the drive belt.

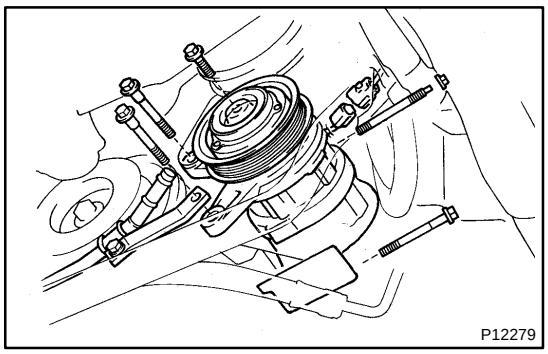

7. DISCONNECT A/C COMPRESSOR FROM ENGINE

(a) Remove the 4 bolts and nut.
(b) Using a torx socket (E10), remove the stud bolt.
(c) Disconnect the compressor connector.
(d) Remove 4 bolts and pull the compressor downward.

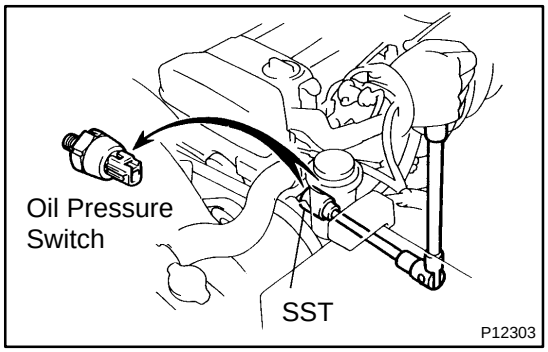

8. REMOVE OIL PRESSURE SWITCH, AND INSTALL OIL PRESSURE GAUGE

(a) Disconnect the oil pressure switch connector.
(b) Using SST, remove the oil pressure switch.
SST 09816-30010
(c) Install an oil pressure gauge.

9. REINSTALL A/C COMPRESSOR

(a) Temporarily install the A/C compressor with the 4 bolts.
(b) Connect the compressor connector.
(c) Install the compressor with the stud bolts, 4 bolts and nut.
Torque:
Stud bolt: 26 N·m (265 kgf·cm, 19 ft·lbf)
Bolt and nut: 52 N·m (530 kgf·cm, 38 ft·lbf)

10. REINSTALL DRIVE BELT

Install the drive belt by turning the drive belt tensioner clockwise.

11. WARM UP ENGINE

Allow the engine to warm up to normal operating temperature.

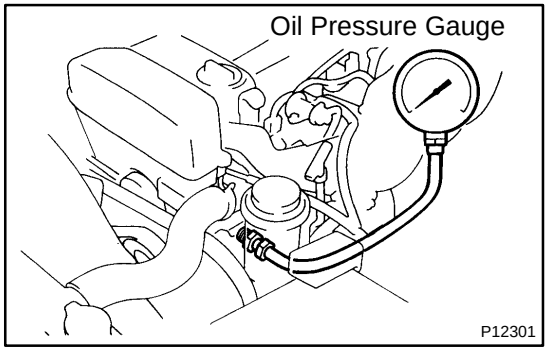

12. CHECK OIL PRESSURE
Oil pressure:
At idle
49 kPa (0.5 kgf/cm^2, 7.1 psi) or more
At 3,000 rpm (2JZ-GE) or 4,000 rpm (2JZ-GTE)
324 - 579 kPa
(3.3 - 5.9 kgf/cm^2, 47 - 84 psi)

13. REMOVE DRIVE BELT

14. DISCONNECT A/C COMPRESSOR FROM ENGINE

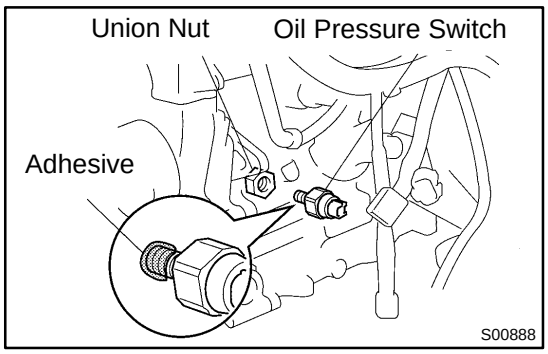

15. REMOVE OIL PRESSURE GAUGE, AND REINSTALL OIL PRESSURE SWITCH

(a) Remove the oil pressure gauge.

(b) Tighten the union nut.
Torque: 60 N·m (600 kgf·cm, 44 ft·lbf)

(c) Apply adhesive to 2 or 3 thread of the oil pressure switch.
Adhesive:
Part No. 08833-00080, THREE BOND 1344, LOCKTITE 242 or equivalent

(d) Using SST, install the oil pressure switch.
SST 09816-30010
Torque: 14 N·m (150 kgf·cm, 11 ft·lbf)

(e) Connect the oil pressure switch connector.

16. REINSTALL A/C COMPRESSOR

17. REINSTALL DRIVE BELT

18. START ENGINE AND CHECK FOR REAKS

19. 2JZ-GTE M/T:
INSTALL DRIVE BELT TENSIONER DAMPER
Torque: 20 N·m (200 kgf·cm, 14 ft·lbf)

20. 2JZ-GTE:
REINSTALL NO.2 AIR TUBE

21. REINSTALL ENGINE UNDER COVER

LU0JZ-01

REPLACEMENT

CAUTION:

- **Prolonged and repeated contact with mineral oil will result in the removal of natural fats from the skin, leading to dryness, irritation and dermatitis. In addition, used engine oil contains potentially harmful contaminants which may cause skin cancer.**
- **Exercise caution in order to minimize the length and frequency of contact of your skin to used oil. Wear protective clothing and gloves. Wash your skin thoroughly with soap and water, or use water-less hand cleaner, to remove any used engine oil. Do not use gasoline, thinners, or solvents.**
- **In order to preserve the environment, used oil and used oil filters must be disposed of only at designated disposal sites.**

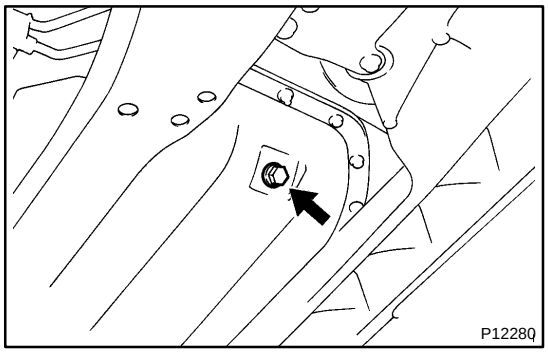

1. DRAIN ENGINE OIL

(a) Remove the oil filler cap.

(b) Remove the oil drain plug, and drain the oil into a container.

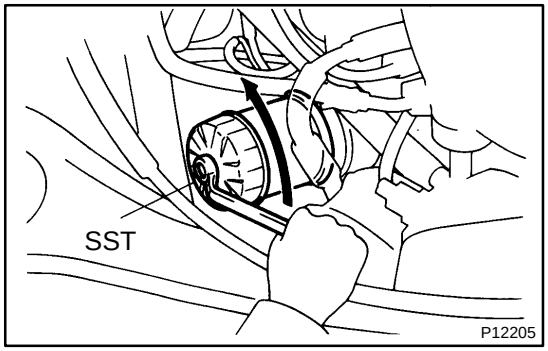

2. REPLACE OIL FILTER

(a) Using SST, remove the oil filter.
SST 09228-07501

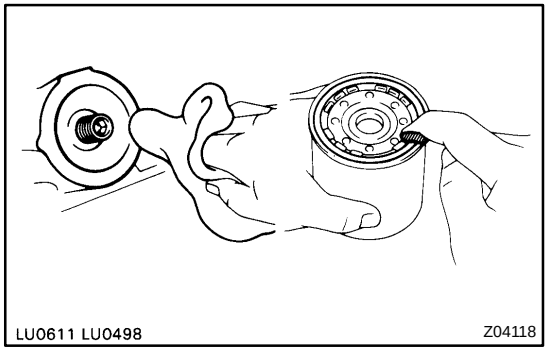

(b) Check and clean the oil filter installation surface.

(c) Apply clean engine oil to the gasket of a new oil filter.

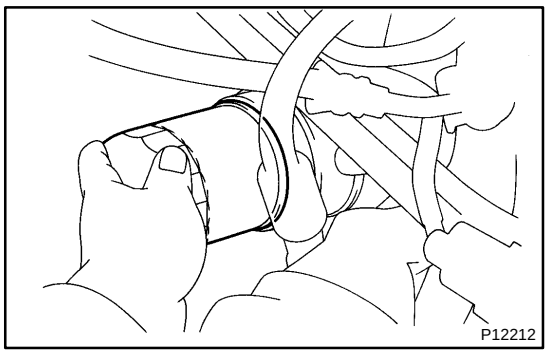

(d) Lightly screw the oil filter into place, and tighten it until the gasket contacts the seat.

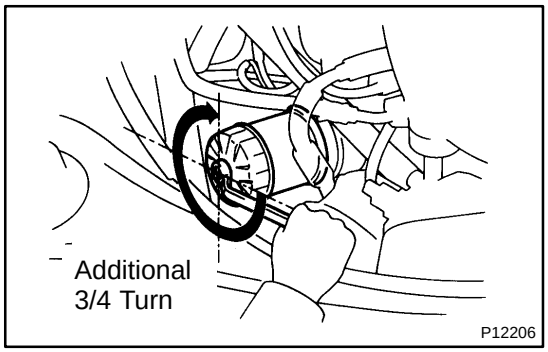

(e) Using SST, tighten it an additional 3/4 turn.
SST 09228-07501

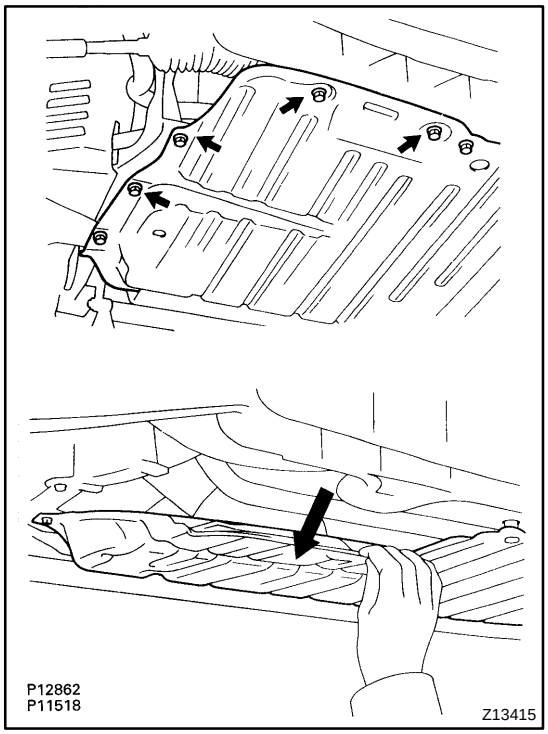

3. REFILL WITH ENGINE OIL

(a) To wipe off oil that has dripped onto the engine under cover, remove the 4 screws and bend the under cover downward.

NOTICE:

- **To avoid damaging the silencer, do not bend the engine under cover more than 150 mm (5.91 in.).**
- **If oil gets on the silencer, wipe it off with a dry rag.**

(b) Clean and install the oil drain plug with a new gasket.
Torque: 38 N·m (375 kgf·cm, 27 ft·lbf)

(c) Fill with fresh engine oil.

	w/ Oil filter Change	w/o Oil filter Change	Dry fill
2JZ-GE	5.2 liters (5.5 US qts, 4.6 Imp. qts)	4.9 liters (5.2 US qts, 4.3 Imp. qts)	6.5 liters (6.9 US qts, 5.7 Imp. qts)
2JZ-GTE	5.0 liters (5.3 US qts, 4.4 Imp. qts)	4.7 liters (5.0 US qts, 4.1 Imp. qts)	6.5 liters 6.9 US qts, 5.7 Imp. qts)

(d) Reinstall the oil filler cap.

4. START ENGINE AND CHECK FOR OIL LEAKS

5. RECHECK ENGINE OIL LEVEL

OIL PUMP

COMPONENTS

LU04U-02

2JZ-GE

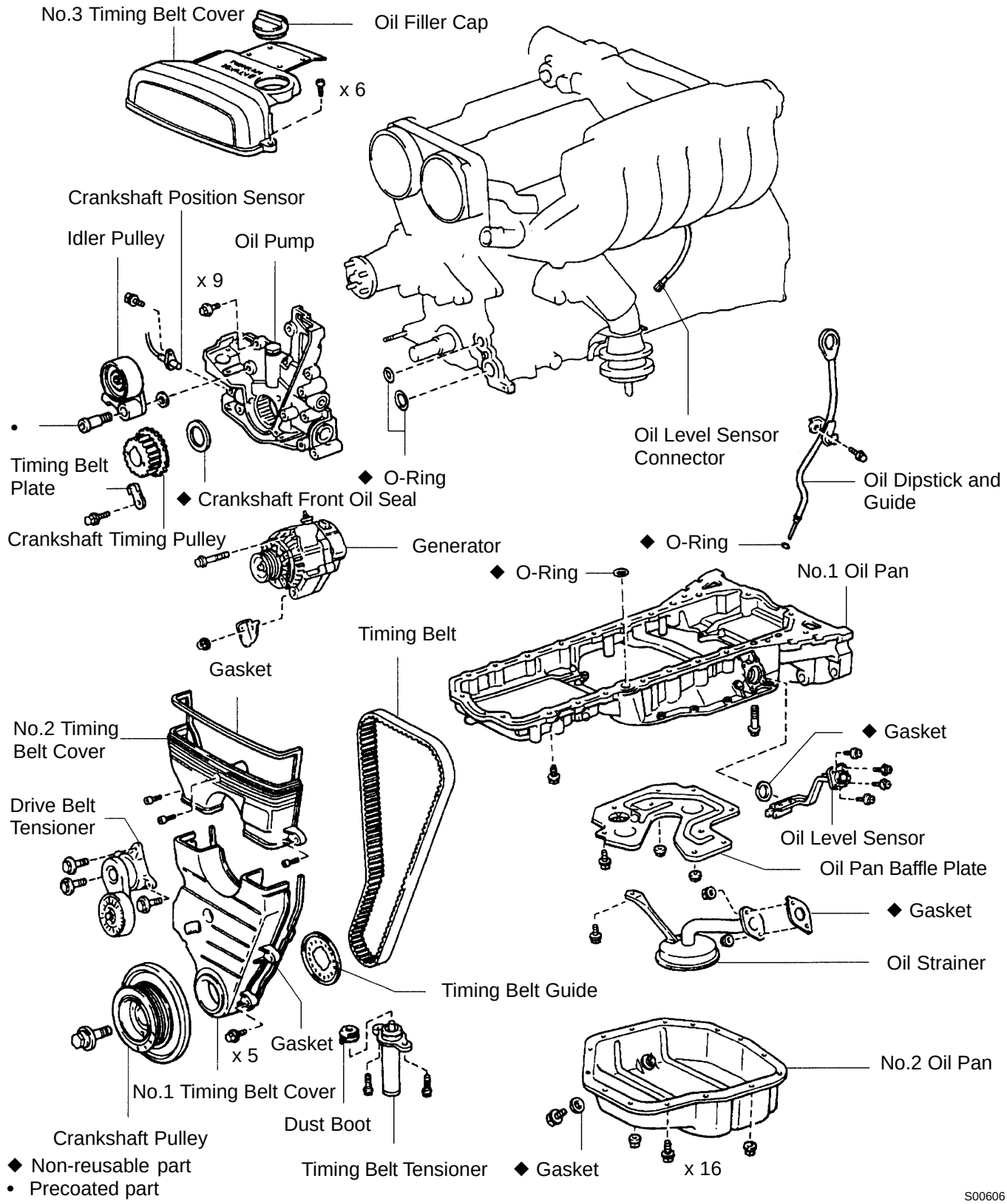

2JZ-GTE

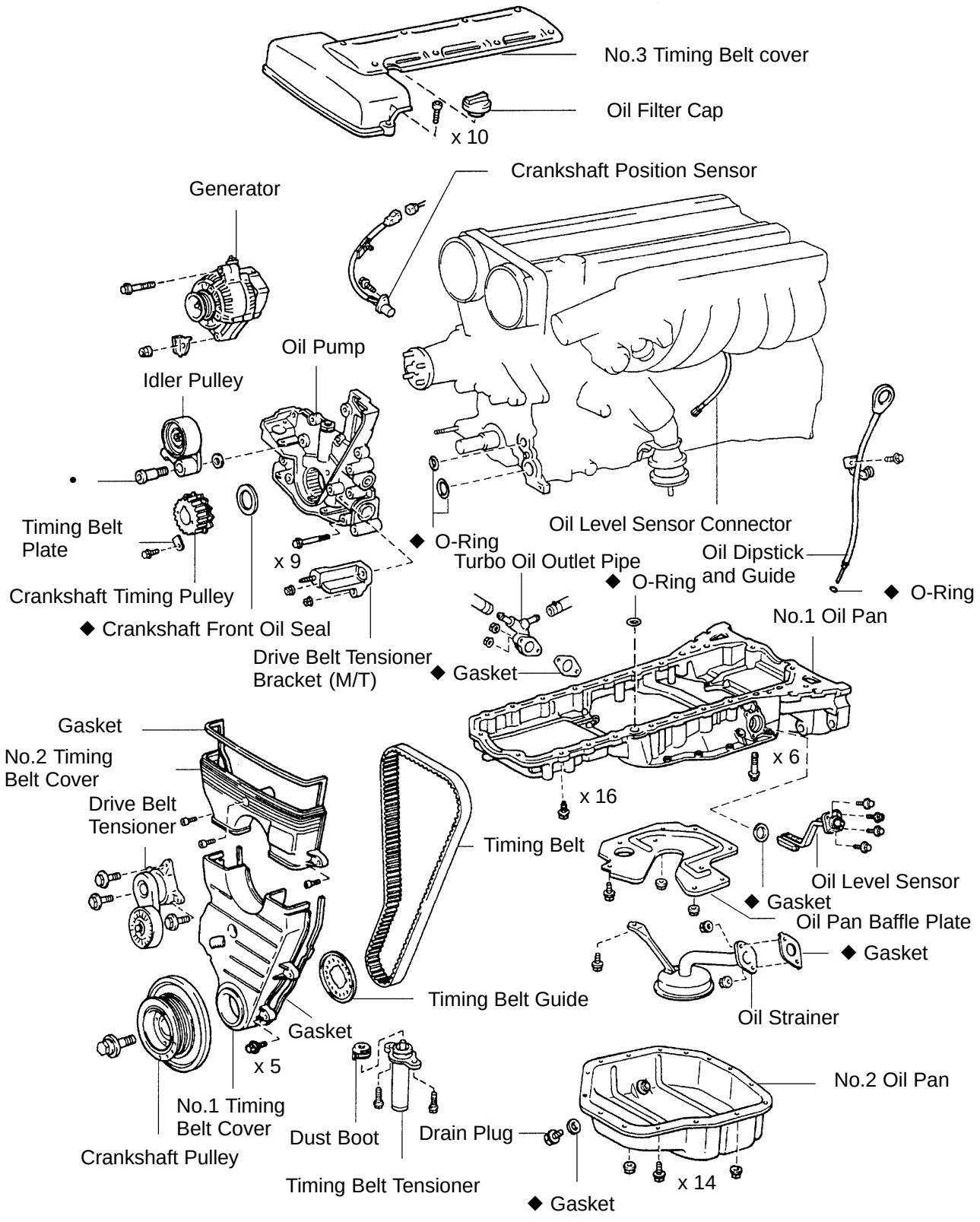

◆Non-reusable part
• Precoated part

S00866

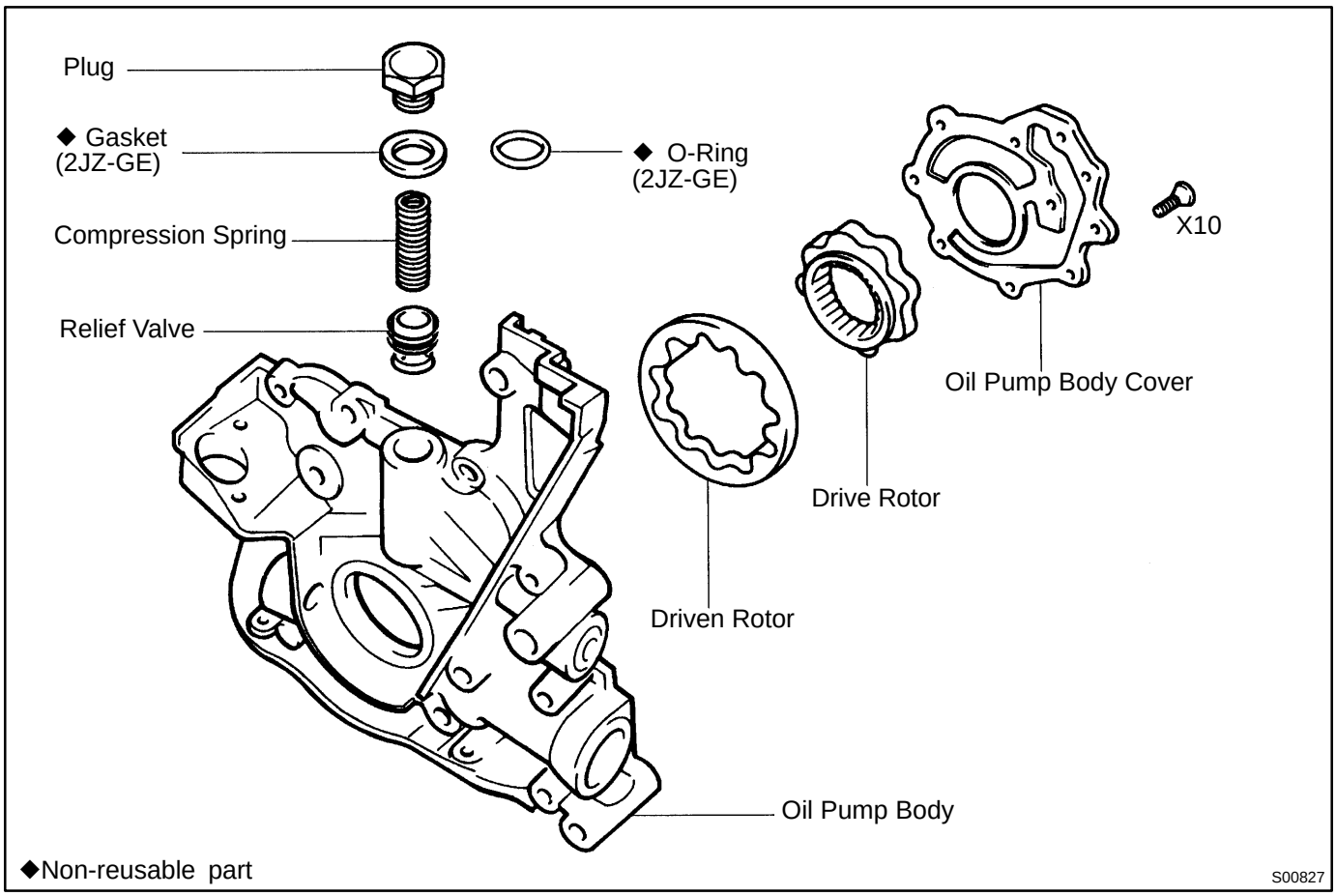
Plug
◆ Gasket (2JZ-GE)
◆ O-Ring (2JZ-GE)
Compression Spring
Relief Valve
X10
Oil Pump Body Cover
Drive Rotor
Driven Rotor
Oil Pump Body
◆Non-reusable part
S00827

LU0K0-01

REMOVAL

HINT:

When repairing the oil pump, the oil pan and strainer should be removed and cleaned.

1. REMOVE ENGINE WITH TRANSMISSION
(2JZ-GE: See page EM-57)
(2JZ-GTE: See page EM-58)

2. SEPARATE ENGINE AND TRANSMISSION
(2JZ-GE: See page AT-20)
(2JZ-GTE: See page EM-58)

3. INSTALL ENGINE TO ENGINE STAND FOR REMOVAL

4. REMOVE GENERATOR (See page CH-8)

5. REMOVE CRANKSHAFT POSITION SENSOR

(a) Disconnect the sensor connector from the clamp bracket.

(b) Disconnect the sensor connector from the wiring connector.

(c) 2JZ-GTE:
Disconnect the wire clamp from the cylinder block.

(d) Remove the bolt and position sensor.

6. REMOVE TIMING BELT
(2JZ-GE: See page EM-13)
(2JZ-GTE: See page EM-15)

7. 2JZ-GTE M/T:
REMOVE DRIVE BELT TENSIONER BRACKET

Remove the 2 nuts and tensioner bracket.

8. REMOVE IDLER PULLEY AND CRANKSHAFT TIMING PULLEY
(2JZ-GE: See page EM-13)
(2JZ-GTE: See page EM-15)

9. REMOVE OIL DIPSTICK AND GUIDE

(a) Remove the bolt.

(b) Pull out the dipstick guide together with the dipstick.

(c) Remove the O-ring from the dipstick guide.

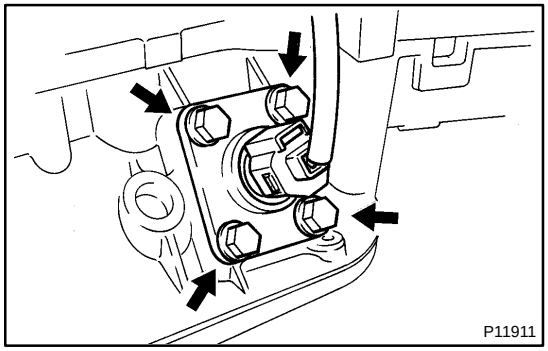

10. REMOVE OIL LEVEL SENSOR

(a) Disconnect the level sensor connector.

(b) Remove the 4 bolts and level sensor.

(c) Remove the gasket from the level sensor.

NOTICE:

Be careful not to drop the oil level sensor when removing it.

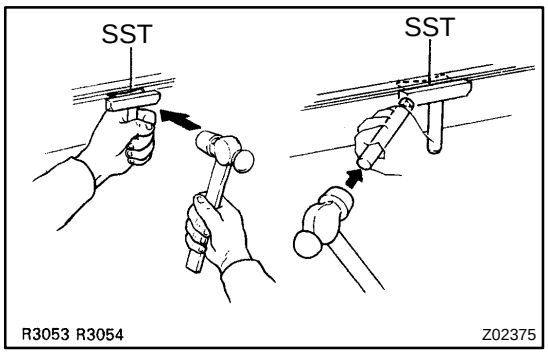

11. REMOVE NO.2 OIL PAN

(a) Remove the 14 bolts and 2 nuts.

(b) Insert the blade of SST between the No.1 and No.2 oil pan, break the seal of the applied sealer and remove the No.2 oil pan.
SST 09032-00100

NOTICE:

- **Be careful not to damage the No.2 oil pan contact surface of the No.1 oil pan.**
- **Be careful not to damage the oil pan flange.**

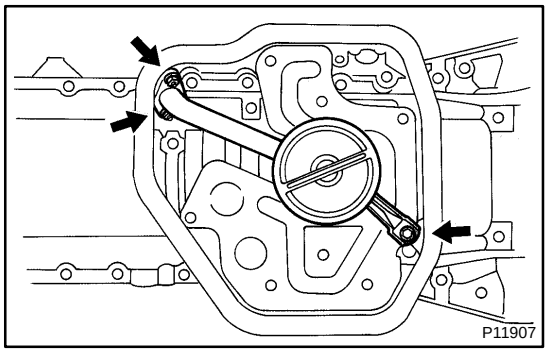

12. REMOVE OIL STRAINER

Remove the bolt, 2 nuts, oil strainer and gasket.

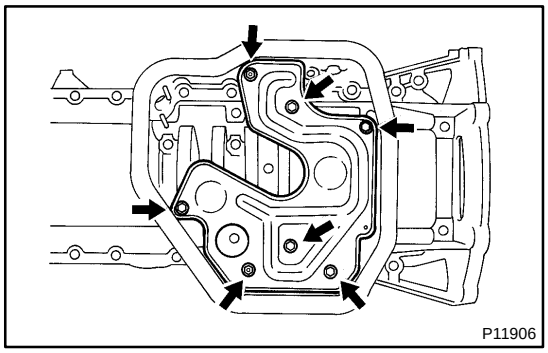

13. REMOVE OIL PAN BAFFLE PLATE

Remove the 5 bolts, 2 nuts and baffle plate.

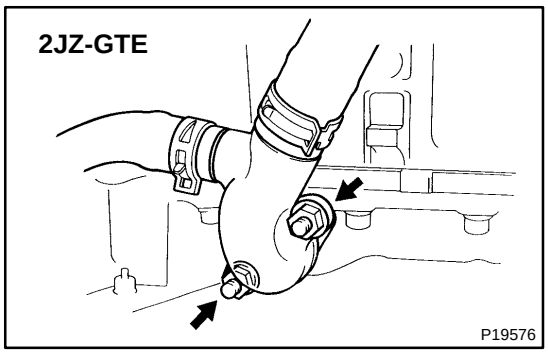

14. 2JZ-GTE:
REMOVE TURBO OIL OUTLET PIPE

(a) Disconnect the 2 turbo oil outlet hoses.

(b) Remove the 2 nuts, oil outlet pipe and gasket.

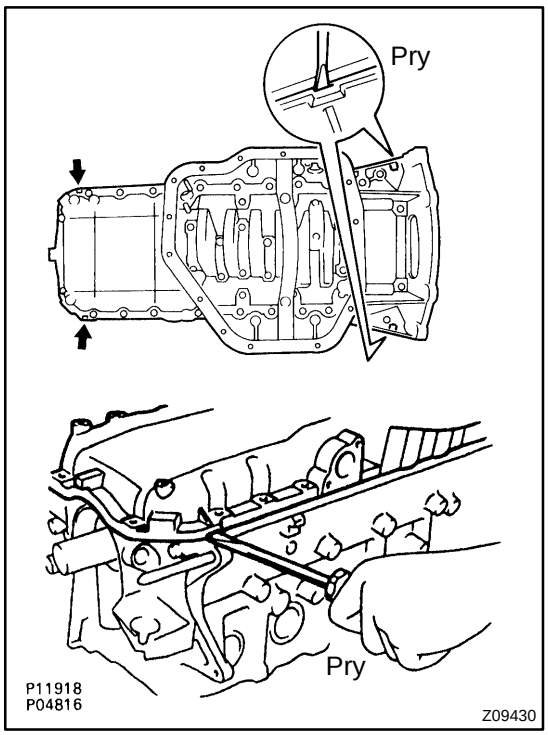

15. REMOVE NO.1 OIL PAN

(a) Remove the 22 bolts.

(b) Remove the No.1 oil pan by prying the portions between the cylinder block and No.1 oil pan with a screwdriver.

NOTICE:

Be careful not to damage the contact surfaces of the cylinder block and No.1 oil pan.

(c) Remove the O-ring from the cylinder block.

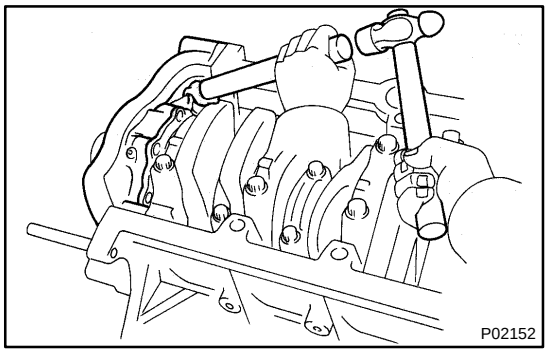

16. REMOVE OIL PUMP

(a) Remove the 9 bolts.

(b) Using a hammer and brass bar, remove the oil pump by carefully tapping the oil pump body.

(c) Remove the 2 O-rings from the cylinder block.

LU0K1-01

DISASSEMBLY

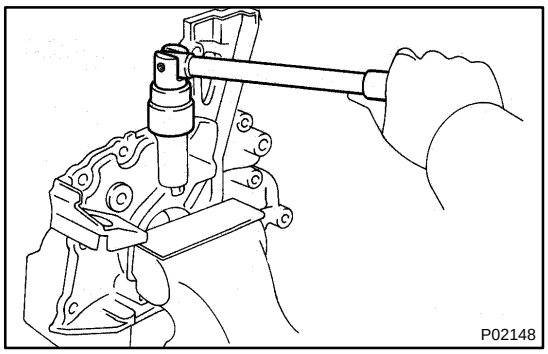

1. REMOVE RELIEF VALVE

(a) Slightly mount the pump body in a vise.

NOTICE:

Be careful not to damage the pump body.

(b) Remove the plug, gasket (2JZ-GE), O-ring (2JZ-GTE), compression spring and relief valve.

HINT:

At the time of reassembly, please refer to the following items.

Use a new gasket (2JZ-GE) or O-ring (2JZ-GTE).

Torque:

2JZ-GE: 49 N·m (500 kgf·cm, 36 ft·lbf)

2JZ-GTE: 29 N·m (300 kgf·cm, 22 ft·lbf)

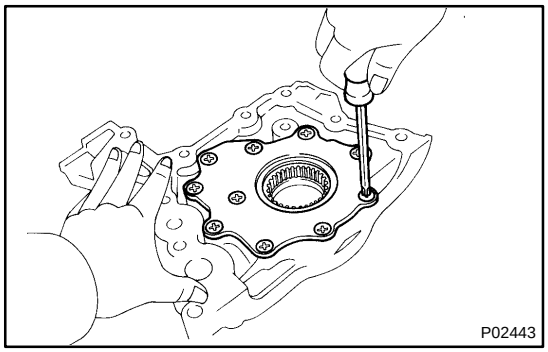

2. REMOVE DRIVE AND DRIVEN ROTORS

Remove the 10 screws, pump body cover, the drive and driven rotors.

Torque: 10 N·m (105 kgf·cm, 8.0 ft·lbf)

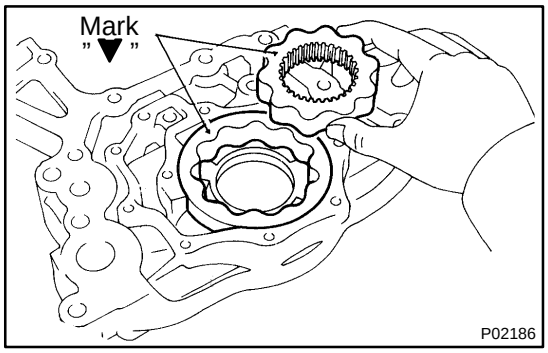

HINT:

At the time of reassembly, please refer to the following item.

Place the drive and driven rotors into the oil pump body with the mark facing upward.

LU04X-02

INSPECTION

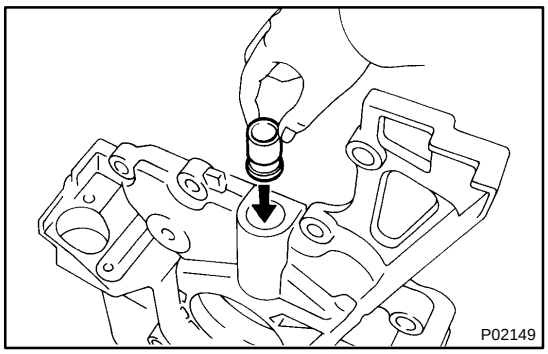

1. INSPECT RELIEF VALVE

Coat the valve with engine oil and check that it falls smoothly into the valve hole under its own weight.

If it doesn't, replace the relief valve. If necessary, replace the oil pump assembly.

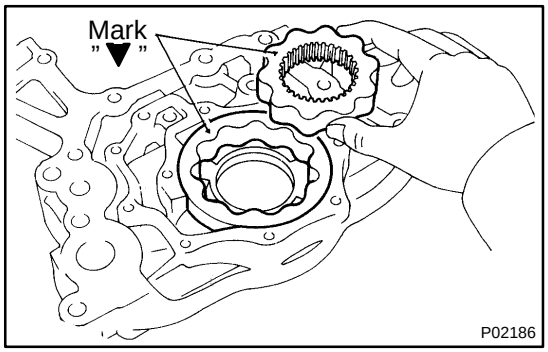

2. PLACE DRIVE AND DRIVEN ROTORS INTO OIL PUMP BODY

(a) Place drive and driven rotors into oil pump body

HINT:

Place the drive and driven rotors into the oil pump body with the mark facing upward.

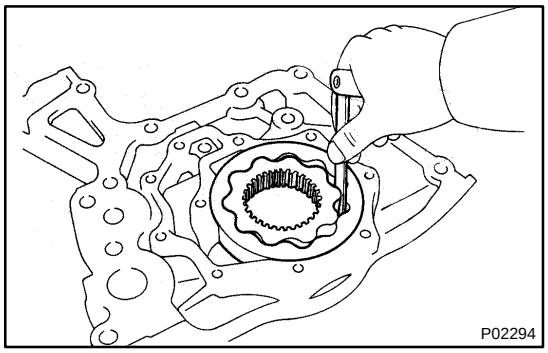

3. INSPECT ROTOR TIP CLEARANCE

Using a feeler gauge, measure the clearance between the drive and driven rotors.

Standard tip clearance:
2JZ-GE: 0.060 - 0.240 mm (0.0024 - 0.0094 in.)
2JZ-GTE: 0.056 - 0.326 mm (0.0022 - 0.0128 in.)
Maximum tip clearance:
2JZ-GE: 0.30 mm (0.0118 in.)
2JZ-GTE: 0.40 mm (0.0157 in.)

If the tip clearance is greater than maximum, replace the rotors as a set.

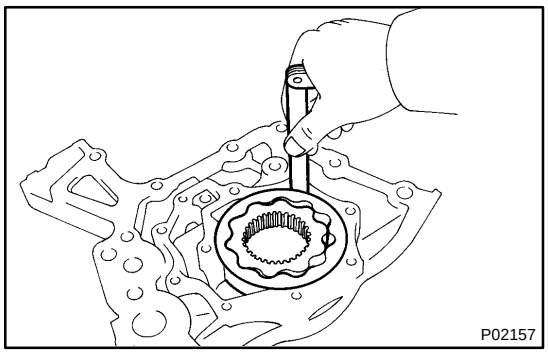

4. INSPECT ROTOR BODY CLEARANCE

Using a feeler gauge, measure the clearance between the driven rotor and pump body.

Standard body clearance:
2JZ-GE: 0.100 - 0.175 mm (0.0039 - 0.0069 in.)
2JZ-GTE: 0.080 - 0.135 mm (0.0031 - 0.0053 in.)
Maximum body clearance:
2JZ-GE: 0.20 mm (0.0079 in.)
2JZ-GTE: 0.16 mm (0.0063 in.)

If the body clearance is greater than maximum, replace the rotors as a set. If necessary, replace the oil pump assembly.

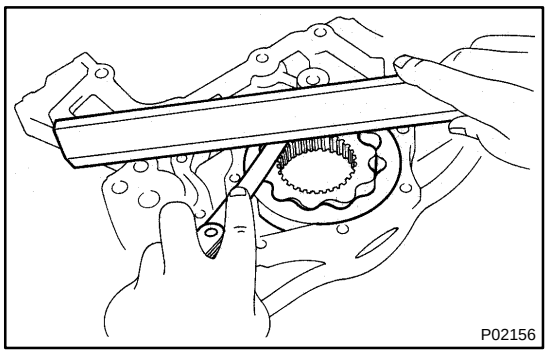

5. INSPECT ROTOR SIDE CLEARANCE

Using a feeler gauge and precision straight edge, measure the clearance between the rotors and precision straight edge.

Standard side clearance:
2JZ-GE: 0.030 - 0.090 mm (0.0012 - 0.0035 in.)
2JZ-GTE: 0.020 - 0.065 mm (0.0007 - 0.0026 in.)
Maximum side clearance:
2JZ-GE: 0.12 mm (0.0047 in.)
2JZ-GTE: 0.10 mm (0.0039 in.)

If the side clearance is greater than maximum, replace the rotors as a set. If necessary, replace the oil pump assembly.

6. REMOVE DRIVE AND DRIVEN ROTORS

LU050-02

INSTALLATION

1. INSTALL OIL PUMP

(a) Remove any old packing (FIPG) material and be careful not to drop any oil on the contact surfaces of the oil pump and cylinder block.

- Using a razor blade gasket scraper, remove all the old packing (FIPG) material from the gasket surfaces and sealing groove.
- Thoroughly clean all components to remove all the debris.
- Using a non-residue solvent, clean both sealing surfaces.

(b) Apply seal packing to the oil pump as shown in the illustration.

Seal packing:
Part No. 08826-00080 or equivalent

- Install a nozzle that has been cut to a 2 - 3 mm (0.08 - 0.12 in.) opening.

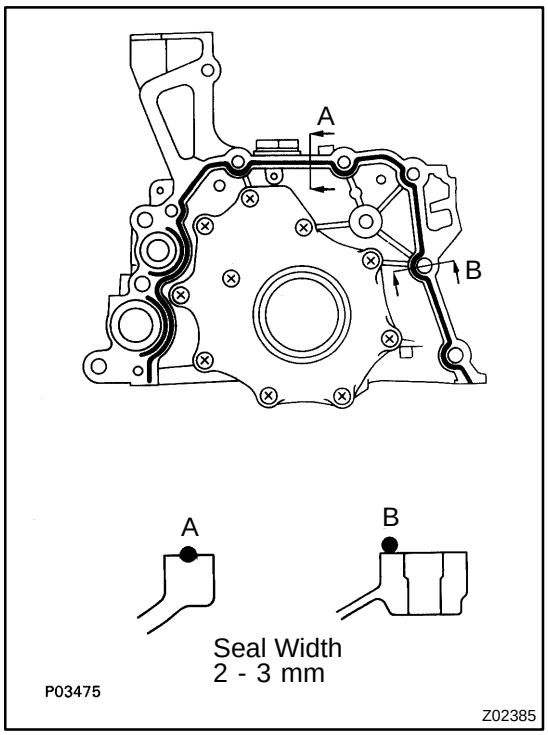

HINT:
Avoid applying an excessive amount to the surface. Be particularly careful near oil passages.

- Parts must be assembled within 5 minutes of application. Otherwise the material must be removed and reapplied.
- Immediately remove nozzle from the tube and reinstall cap.

(c) Place 2 new O-rings in position on the cylinder block.

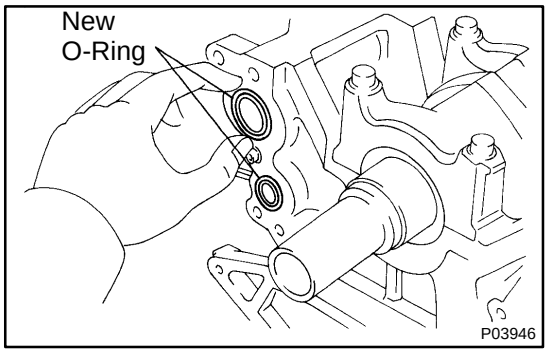

(d) Install the oil pump with the 9 bolts.
Torque: 21 N·m (210 kgf·cm, 15 ft·lbf)

2. INSTALL NO.1 OIL PAN

(a) Remove any old packing (FIPG) material and be careful not to drop any oil on the contact surfaces of the No.1 oil pan and cylinder block.

- Using a razor blade and gasket scraper, remove all the old packing (FIPG) material from the gasket surfaces and sealing groove.
- Thoroughly clean all components to remove all the debris.
- Using a non-residue solvent, clean both sealing surfaces.

NOTICE:
Do not use a solvent which will affect the painted surfaces.

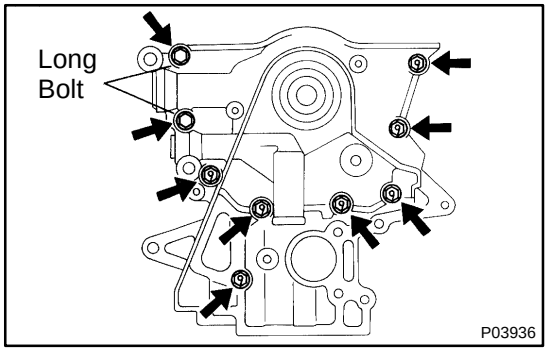

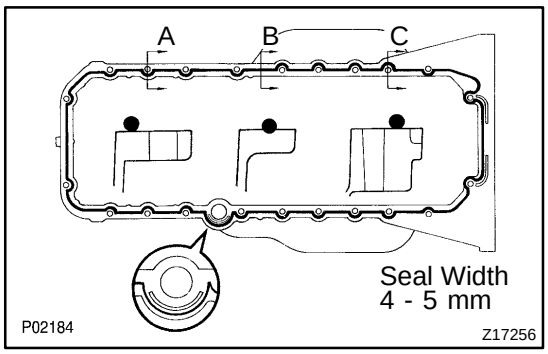

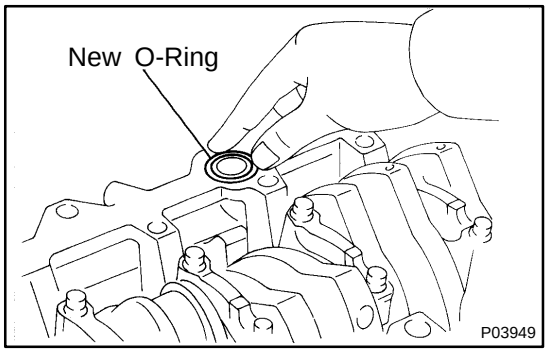

(b) Apply seal packing to the No.1 oil pan as shown in the illustration.

Seal packing:

Parts No. 08826-00080 or equivalent

- Install a nozzle that has been cut to a 4 - 5 mm (0.16 - 0.20 in.) opening.

HINT:

Avoid applying an excessive amount to the surface.

- Parts must be assembled within 5 minutes of application. Otherwise the material must be removed and reapplied.
- Immediately remove nozzle from the tube and reinstall cap.

(c) Place a new O-ring in the position on the cylinder block.

(d) Install the No.1 oil pan with the 22 bolts.

Torque:

12 mm head

21 N·m (210 kgf·cm, 15 ft·lbf)

14 mm head

39 N·m (400 kgf·cm, 29 ft·lbf)

3. 2JZ-GTE

INSTALL TURBO OIL OUTLET PIPE

(a) Install a new gasket and the oil outlet pipe with the 2 nuts.

Torque: 27 N·m (280 kgf·cm, 20 ft·lbf)

(b) Connect the 2 turbo oil outlet hoses.

4. INSTALL OIL PAN BAFFLE PLATE

Torque: 8.8 N·m (90 kgf·cm, 78 in.·lbf)

5. INSTALL OIL STRAINER

Install a new gasket and the oil strainer with the bolt and 2 nuts.

Torque: 8.8 N·m (90 kgf·cm, 78 in.·lbf)

6. INSTALL NO.2 OIL PAN

(a) Remove any old packing (FIPG) material and be careful not to drop any oil on the contact surfaces of the No.1 and No.2 oil pans.

- Using a razor blade and gasket scraper, remove all the old packing (FIPG) material from the gasket surfaces and sealing groove.
- Thoroughly clean all components to remove all the debris.
- Using a non-residue solvent, clean both sealing surfaces.

NOTICE:

Do not use a solvent which will affect the painted surfaces.

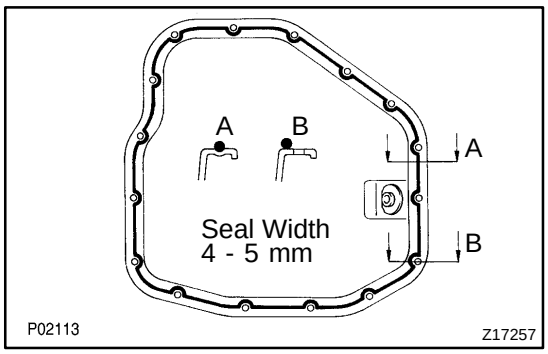

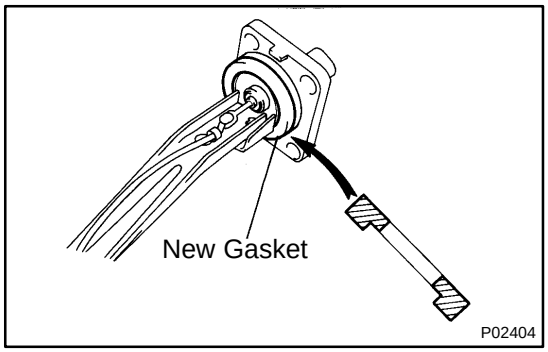

(b) Apply seal packing to the No.2 oil pan as shown in the illustration.
Seal packing:
Part No. 08826-00080 or equivalent
- Install a nozzle that has been cut to a 4 - 5 mm (0.16 - 0.20 in.) opening.

HINT:
Avoid applying an excessive amount to the surface.
- Parts must be assembled within 5 minutes of application. Otherwise the material must be removed and reapplied.
- Immediately remove nozzle from the tube and reinstall cap.

(c) Install the No.2 oil pan with the 14 bolts and 2 nuts.
Torque: 8.8 N·m (90 kgf·cm, 78 in.·lbf)

7. INSTALL OIL LEVEL SENSOR
(a) Install a new gasket to the level sensor.
(b) Install the level sensor with the 4 bolts.
Torque: 5.4 N·m (55 kgf·cm, 48 in.·lbf)
(c) Connect the level sensor connector.

8. INSTALL OIL DIPSTICK GUIDE AND DIPSTICK
(a) Install a new O-ring on the dipstick guide.
(b) Apply new oil to the O-ring.
(c) Connect the dipstick guide end to the dipstick tube of the oil pan.
(d) Install the dipstick guide with the bolt.
(e) Install the dipstick.

9. INSTALL CRANKSHAFT TIMING PULLEY AND IDLER PULLEY
(2JZ-GE: See page EM-19)
(2JZ-GTE: See page EM-21)

10. 2JZ-GTE M/T:
INSTALL DRIVE BELT TENSIONER BRACKET
Torque: 27 N·m (280 kgf·cm, 20 ft·lbf)

11. INSTALL TIMING BELT
(2JZ-GE: See page EM-19)
(2JZ-GTE: See page EM-21)

12. INSTALL CRANKSHAFT POSITION SENSOR
Torque: 9.0 N·m (90 kgf·cm, 80 in.·lbf)

13. INSTALL GENERATOR (See page CH-18)

14. REMOVE ENGINE STAND FROM ENGINE

15. ASSEMBLY ENGINE AND TRANSMISSION
(2LZ-GE: See page AT-24)
(2JZ-GTE: See page EM-65)

16. INSTALL ENGINE WITH TRANSMISSION
(2JZ-GE: See page EM-57)
(2JZ-GTE: See page EM-65)

OIL COOLER (2JZ-GTE)

LU04Q-01

COMPONENTS

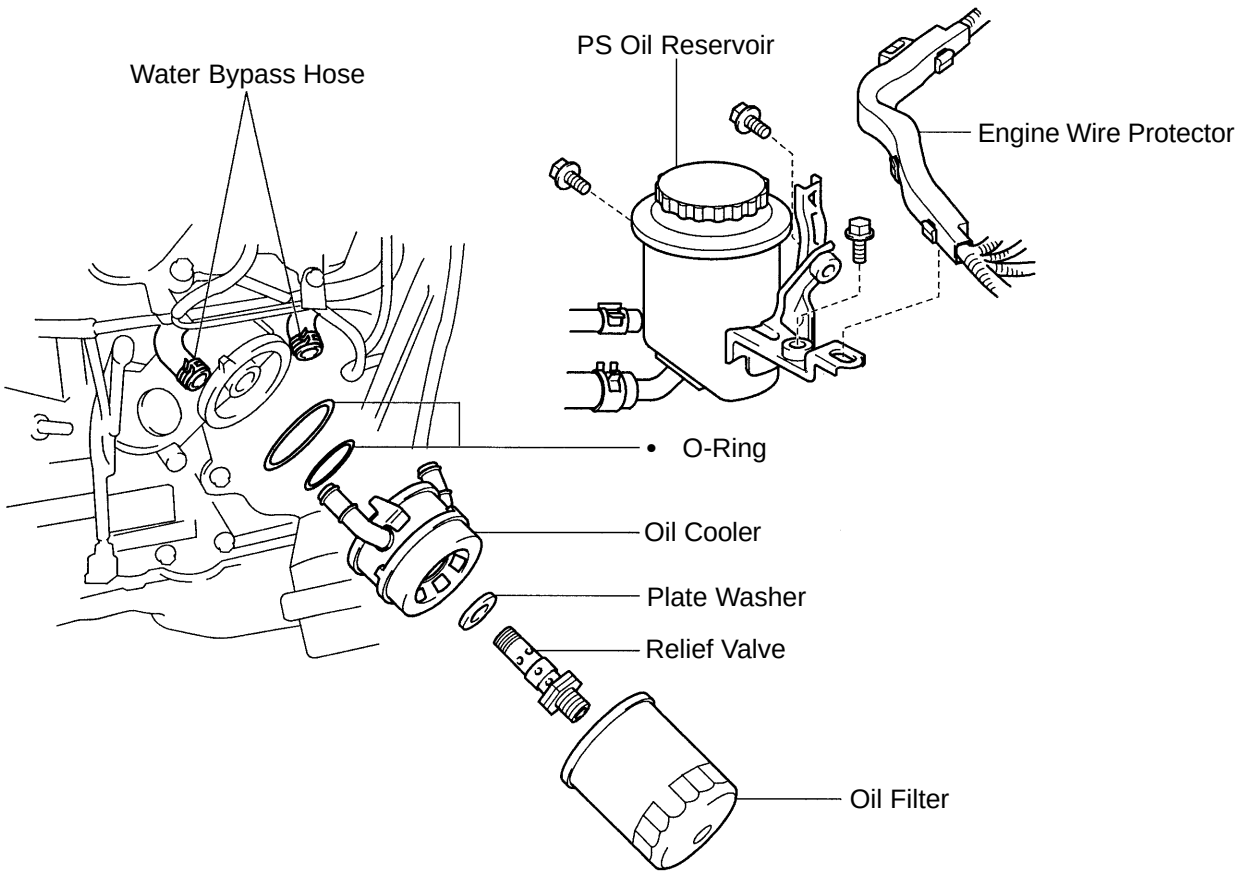

• Non-reusable part

B02884

LU04R-01

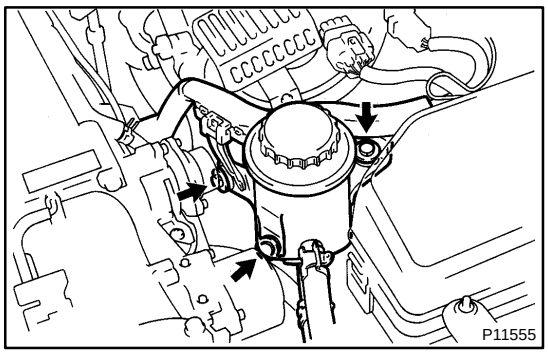

REMOVAL

1. DISCONNECT PS OIL RESERVOIR WITHOUT DISCONNECTING HOSES

(a) Disconnect the 2 clamps of the engine wire protector from the bracket.

(b) Remove the 3 bolts and disconnect the reservoir.

2. DRAIN ENGINE COOLANT

3. REMOVE OIL FILTER

(See page LU-4)

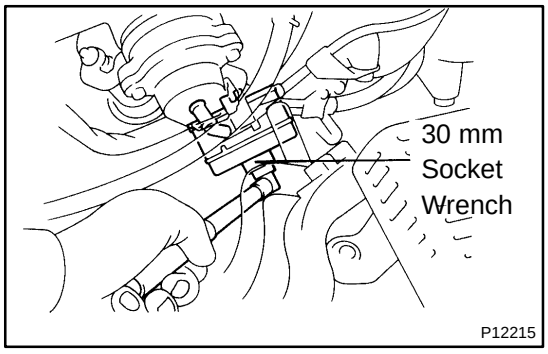

4. DISCONNECT WATER BYPASS HOSES FROM OIL COOLER

5. REMOVE OIL COOLER

(a) Remove the relief valve, plate washer and oil cooler.

(b) Remove the 2 O-rings from the oil cooler.

LU04S-01

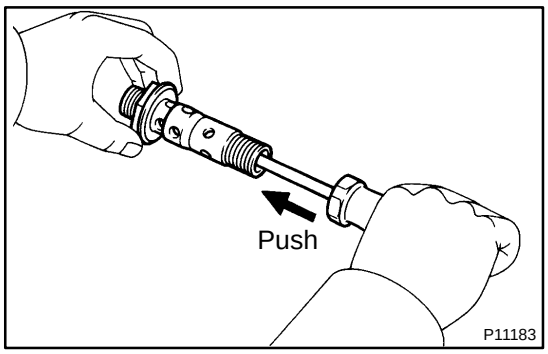

INSPECTION

1. INSPECT RELIEF VALVE

Push the valve with a wooden stick to check if it is stuck.
If stuck, replace the relief valve.

2. INSPECT OIL COOLER

Check the oil cooler for damage or clogging.
If necessary, replace the oil cooler.

LU04T-02

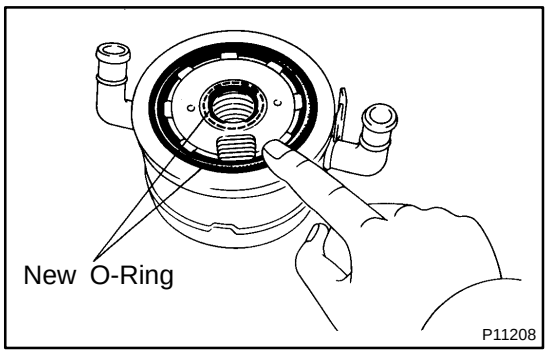

INSTALLATION

1. INSTALL OIL COOLER

(a) Install 2 new O-rings to the oil cooler.

(b) Apply a light coat of engine oil on the threads and under the head of the relief valve.

(c) Temporarily install the oil cooler with the plate washer and relief valve.

(d) Tighten the relief valve.

Torque: 78 N·m (800 kgf·cm, 58 ft·lbf)

2. CONNECT WATER BYPASS HOSES TO OIL COOLER

3. CONNECT PS OIL RESERVOIR

4. INSTALL OIL FILTER

5. FILL WITH ENGINE COOLANT

6. START ENGINE AND CHECK FOR LEAKS

7. CHECK ENGINE OIL LEVEL

OIL NOZZLE (2JZ-GTE)

LU051-01

COMPONENTS

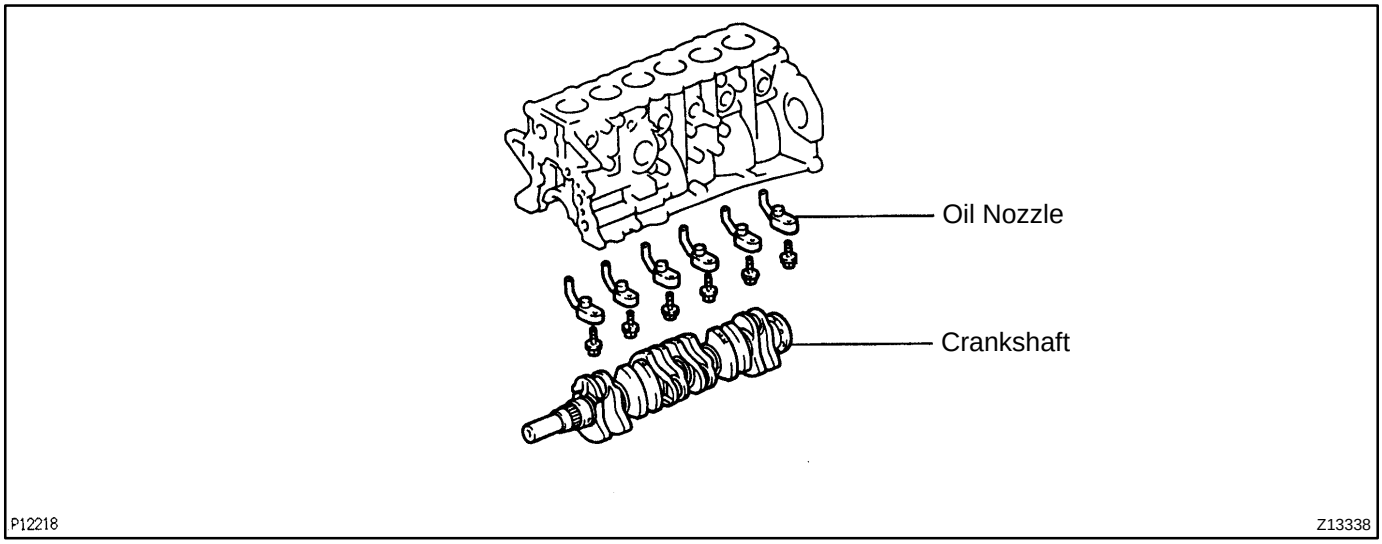

LU052-01

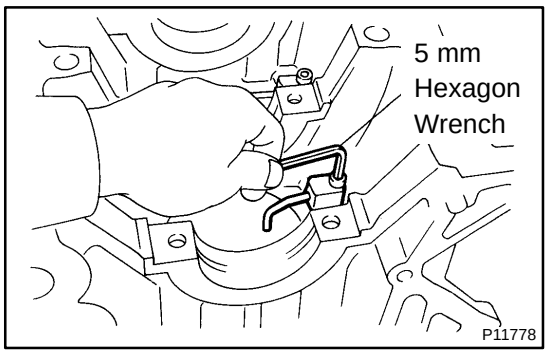

REMOVAL

1. REMOVE CRANKSHAFT

(See page EM-71)

2. REMOVE OIL NOZZLES (WITH RELIEF VALVES)

Using a 5 mm hexagon wrench, remove the bolt and oil nozzle. Remove the 6 oil nozzles.

LU053-01

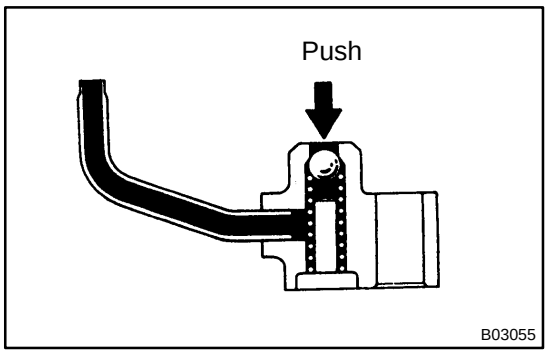

INSPECTION

INSPECT RELIEF VALVES (OIL NOZZLES)

Push the valve with a wooden stick to check if it is stuck.
If stuck, replace the relief valve.

LU054-01

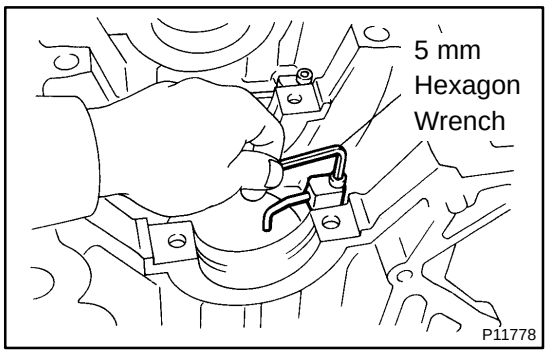

INSTALLATION

1. INSTALL OIL NOZZLES (WITH RELIEF VALVES)

Using a 5 mm hexagon wrench, install the oil nozzle with the bolt. Install the 6 oil nozzles.

Torque: 9.0 N·m (90 kgf·cm, 80 in.·lbf)

2. INSTALL CRANKSHAFT

(See page EM-88)

PP0QE-01

RECOMMENDED TOOLS

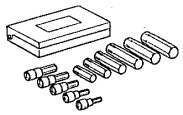	09040-00010	Hexagon Wrench Set .	
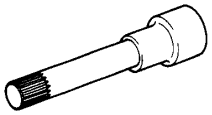	09043-50100	Bi-hexagon Wrench 10 mm .	Cylinder head bolt
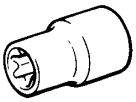	09044-00020	Torx Socket E10 .	A/C compressor stud bolt
	09090-04020	Engine Sling Device	For suspending engine
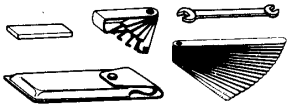	09200-00010	Engine Adjust Kit .	
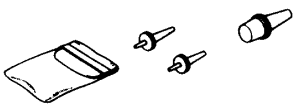	09258-00030	Hose Plug Set .	

EM0AD-02

REMOVAL

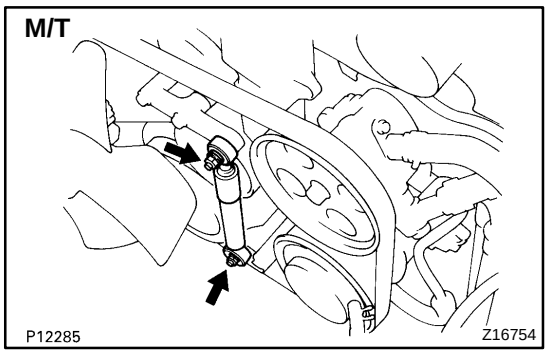

1. REMOVE RADIATOR ASSEMBLY
(See page CO-22)

2. M/T:
REMOVE DRIVE BELT TENSIONER DAMPER

Remove the 2 nuts and tensioner damper.

3. REMOVE DRIVE BELT, FAN, FLUID COUPLING ASSEMBLY AND WATER PUMP PULLEY
(See page CO-7)

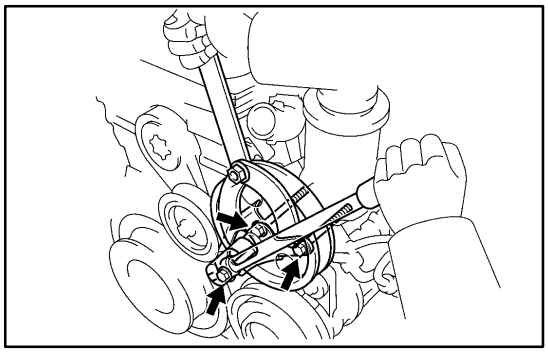

4. REMOVE PS PUMP PULLEY

Using SST, remove the nut and pump pulley.

SST 09960-10010 (09962-01000, 09963-01000)

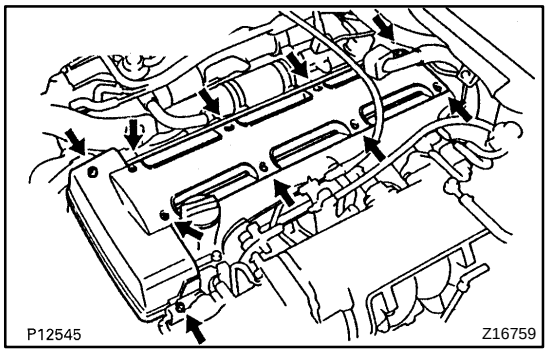

5. REMOVE NO.3 TIMING BELT COVER

(a) Remove the oil filler cap.

(b) Using a 5 mm hexagon wrench, remove the 10 bolts and belt cover

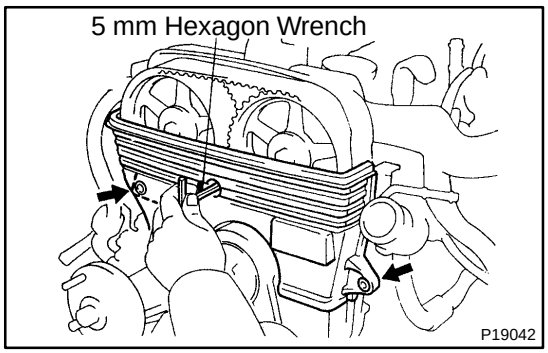

6. REMOVE NO.2 TIMING BELT COVER

Using a 5 mm hexagon wrench, remove the 3 bolts, belt cover and gasket.

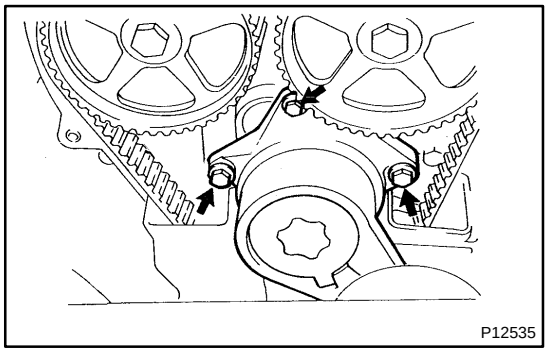

7. REMOVE DRIVE BELT TENSIONER

Remove the 3 bolts and tensioner.

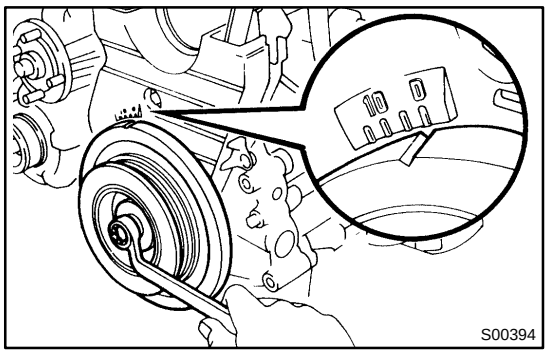

8. SET NO.1 CYLINDER TO TDC/COMPRESSION

(a) Turn the crankshaft pulley, and align its groove with timing mark ”0” of the No.1 timing belt cover.

NOTICE:

Always turn the crankshaft clockwise.

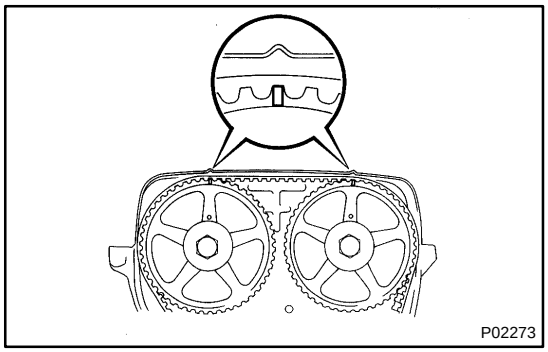

(b) Check that the timing marks of the camshaft timing pulleys are aligned with the timing marks of the No.4 timing belt cover.

If not, turn the crankshaft 1 revolution (360˚).

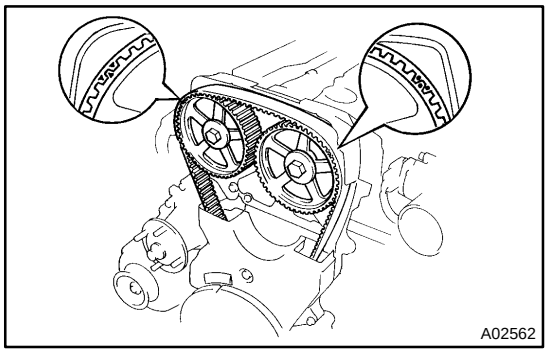

9. REMOVE TIMING BELT FROM CAMSHAFT TIMING PULLEYS

HINT:

(Re-using timing belt):

Place matchmarks on the timing belt and camshaft timing pulleys as shown in the illustration.

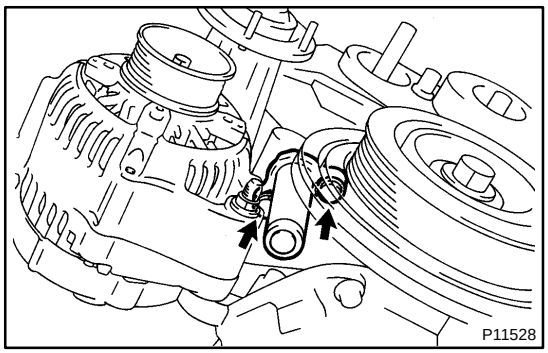

(a) Alternately loosen the 2 bolts, and remove them, the tensioner and dust boot.

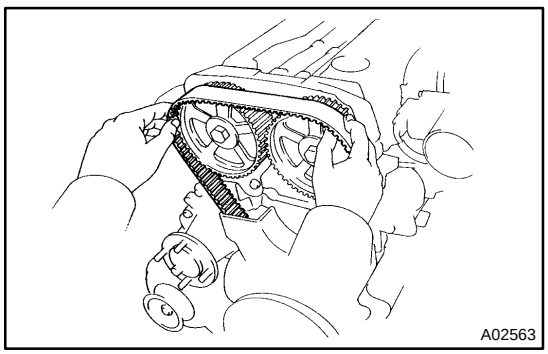

(b) Disconnect the timing belt from the camshaft timing pulleys.

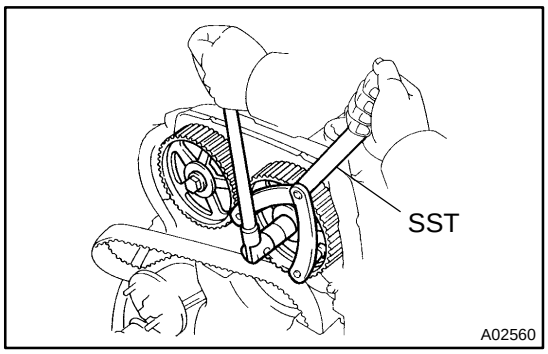

10. REMOVE CAMSHAFT TIMING PULLEYS

Using SST, remove the pulley bolt. Remove the 2 timing pulleys.

SST 09960-10010 (09962-01000, 09963-01000)

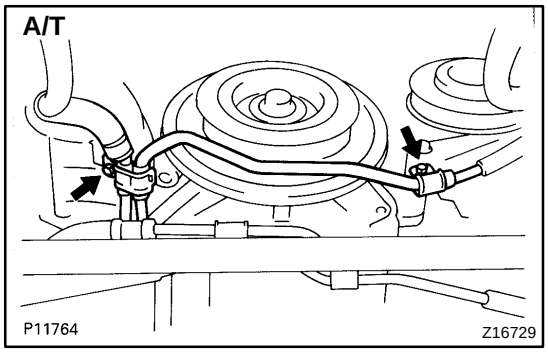

11. A/T:
DISCONNECT OIL COOLER TUBES

Remove the 2 bolts and hose clamps, and disconnect oil cooler tubes.

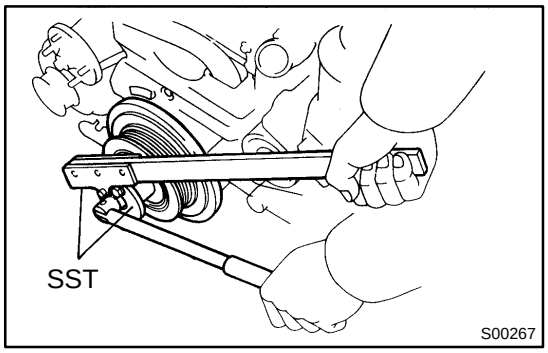

12. REMOVE CRANKSHAFT PULLEY

(a) Using SST, loosen the pulley bolt.
SST 09213-70010, 09330-00021

(b) Remove the pulley bolt.

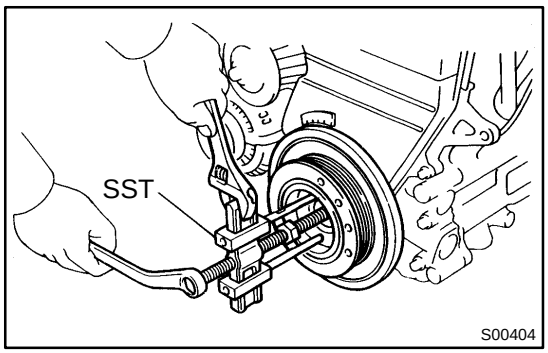

(c) Using SST, remove the pulley.
SST 09950-50010 (09951-05010, 09952-05010, 09953-05010, 09953-05020, 09954-05030)

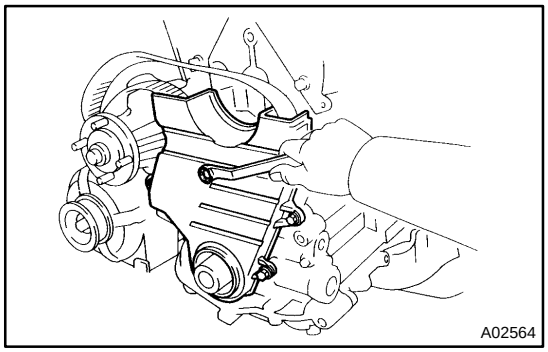

13. REMOVE NO.1 TIMING BELT COVER

Remove the 5 bolts, timing belt cover and gasket.

14. REMOVE TIMING BELT GUIDE

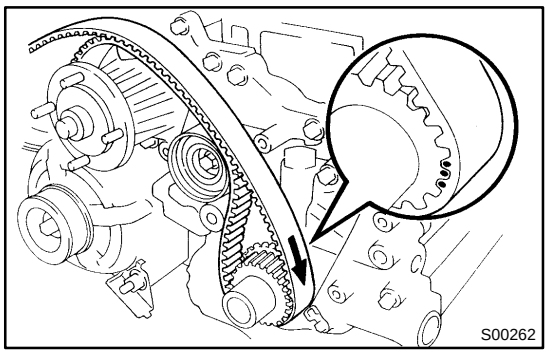

15. REMOVE TIMING BELT

HINT:

(When re-using timing belt):

Draw an arrow on the timing belt in the direction of engine revolution, and place matchmarks on the timing belt and crankshaft timing pulley.

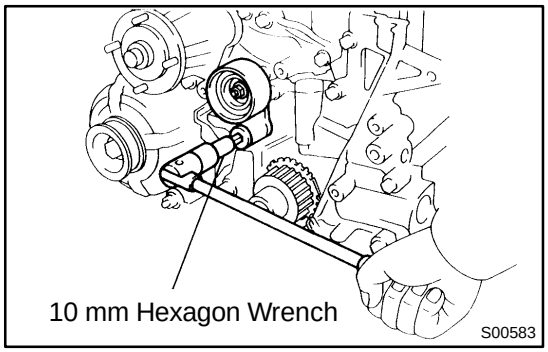

16. REMOVE IDLER PULLEY

Using a 10 mm hexagon wrench, remove the pivot bolt, plate washer and idler pulley.

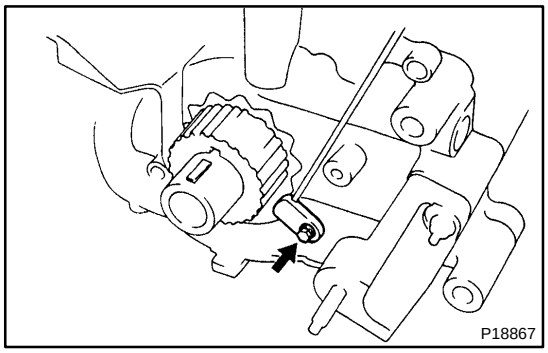

17. REMOVE CRANKSHAFT TIMING PULLEY

(a) Remove the bolt and timing belt plate.

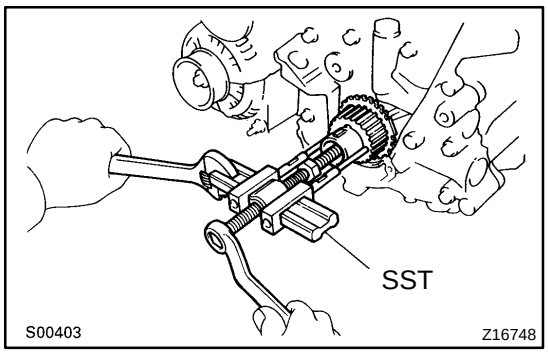

(b) Remove the crankshaft timing pulley.

If the pulley cannot be removed by hand, use SST to remove the crankshaft timing pulley.

SST 09950-50010 (09951-05010, 09952-05010, 09953-05010, 09953-05020, 09954-05010)

NOTICE:

Do not scratch the sensor part the crankshaft timing pulley.

EM1DY-01

REMOVAL

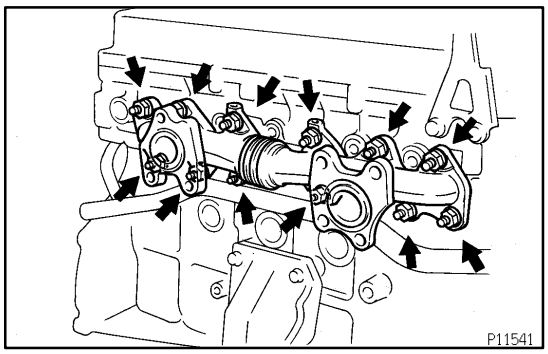

1. REMOVE TURBOCHARGER
(See page TC-10)

2. REMOVE EXHAUST MANIFOLD

Remove the 12 nuts, exhaust manifold and 2 gaskets.

3. M/T:
REMOVE DRIVE BELT TENSIONER DAMPER
(See page EM-15)

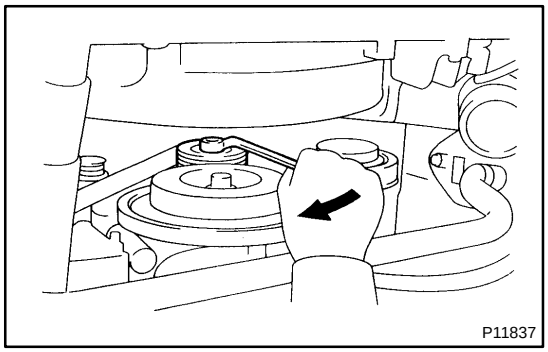

4. REMOVE DRIVE BELT

Loosen the drive belt tension by turning the drive belt tensioner clockwise, and remove the drive belt.

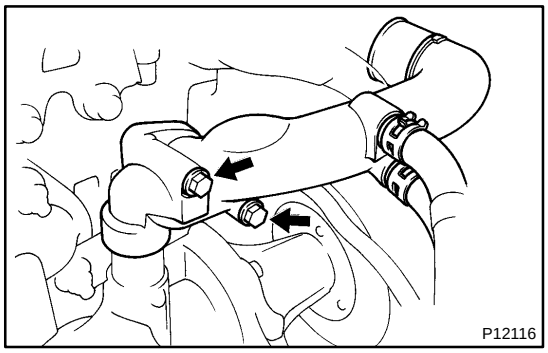

5. REMOVE WATER OUTLET AND NO.1 WATER BYPASS PIPE

(a) Disconnect the upper radiator hose from the water outlet.
(b) Disconnect the ECT sensor and sender gauge connectors.
(c) Remove the 2 bolts, water outlet and gasket.
(d) Remove the No.1 water bypass pipe and 2 O-rings.

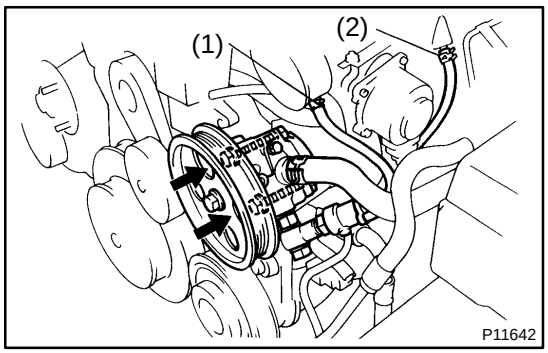

6. DISCONNECT PS PUMP WITHOUT DISCONNECTING HOSES

(a) Disconnect these hoses:
(1) PS air hose from throttle body
(2) PS air hose from air intake chamber
(b) Remove the 2 bolts, and disconnect the vane pump from the pump bracket.

HINT:
Put aside the vane pump, and suspend it.

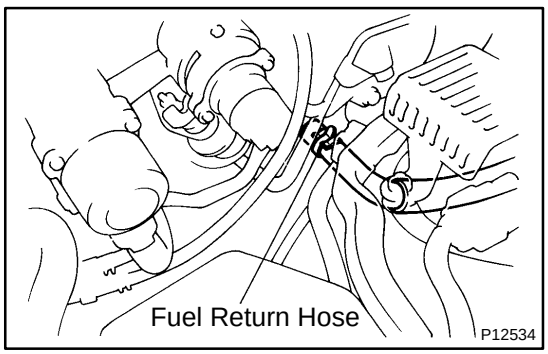

7. DISCONNECT FUEL RETURN HOSE

Disconnect the fuel return hose from the fuel return pipe. Plug the hose end.

8. REMOVE AIR INTAKE CHAMBER ASSEMBLY
(See page SF-20)

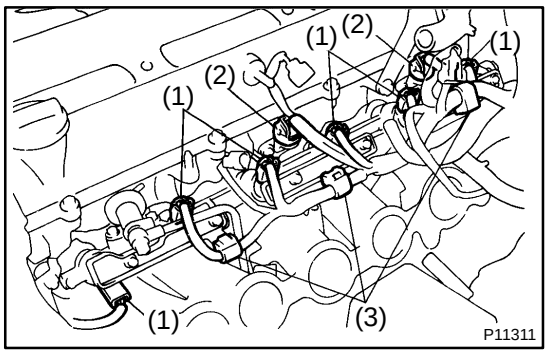

9. DISCONNECT ENGINE WIRE

(a) Disconnect these connectors and clamps:
- (1) 6 injectors connectors
- (2) 2 camshaft position sensor connectors
- (3) 3 engine wire clamps from injector holders
- (4) VSV connector for EVAP

(b) Remove the 2 bolts, and disconnect the 2 ground straps from the intake manifold.

(c) Remove the nut, and disconnect the engine wire protector from the intake manifold.

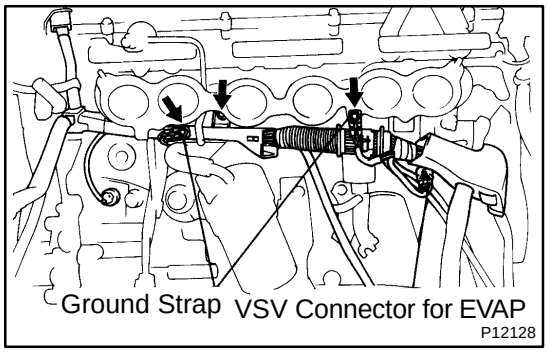

10. REMOVE PRESSURE TANK AND VSV ASSEMBLY

(a) Disconnect the 2 vacuum hoses from the pressure tank.

(b) Remove the 2 nuts and pressure tank and VSV assembly.

11. REMOVE FUEL PRESSURE PULSATION DAMPER (See page SF-31)

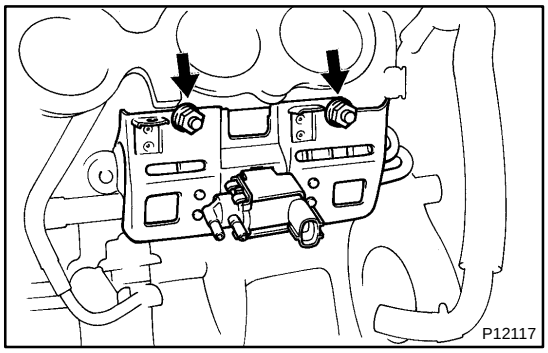

12. REMOVE FUEL INLET PIPE

Remove the union bolt, 2 gaskets, clamp bolt and fuel inlet pipe.

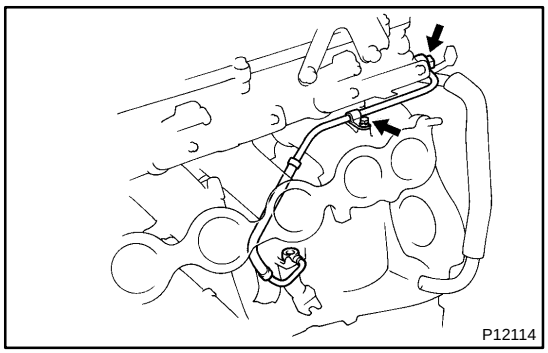

13. REMOVE INTAKE MANIFOLD AND DELIVERY PIPE ASSEMBLY

Remove the 4 bolts, 2 nuts, engine wire bracket, the intake manifold, delivery pipe assembly and gasket.

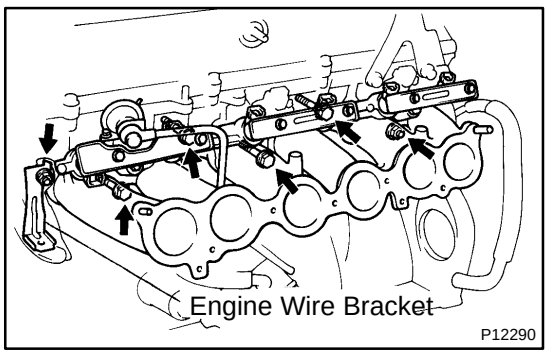

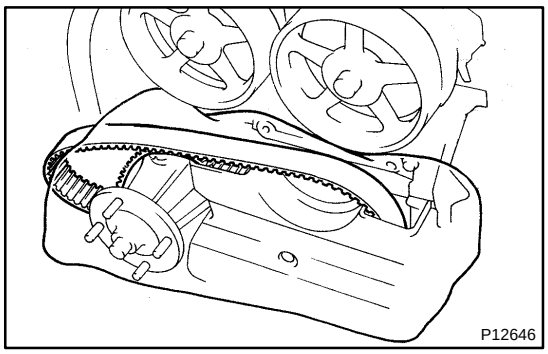

14. REMOVE TIMING BELT FROM CAMSHAFT TIMING PULLEYS (See page EM-15)

NOTICE:

- **Support the timing belt, so that the meshing of the crankshaft timing pulley and timing belt does not shift.**
- **Be careful not to drop anything inside the timing belt cover.**
- **Do not allow the timing belt to come into contact with oil, water or dust.**

15. REMOVE IGNITION COILS ASSEMBLIES (See page IG-6)

16. REMOVE SPARK PLUGS

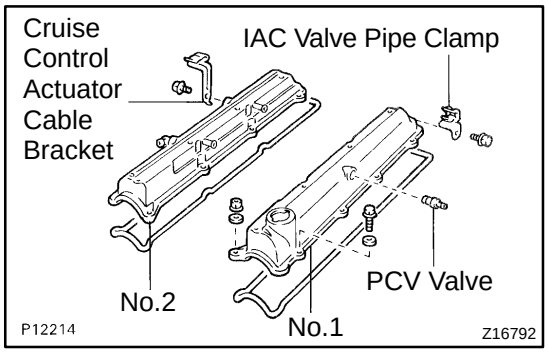

17. REMOVE NO.1 AND NO.2 CYLINDER HEAD COVERS

(a) Remove the 2 bolts, cruise control actuator cable bracket and IAC valve pipe clamp.

(b) Remove the PCV valve.

(c) Remove the 6 bolts, 2 nuts, 8 seal washers and No.1 cylinder head cover and gasket.

(d) Remove the 6 bolts, 2 nuts, 8 seal washers and No.2 cylinder head cover and gasket.

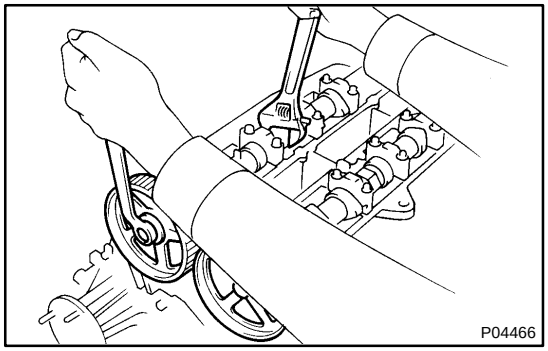

18. REMOVE CAMSHAFT TIMING PULLEYS

Hold the hexagon portion of the camshaft with a wrench, and remove the pulley mounting bolt and camshaft pulley.

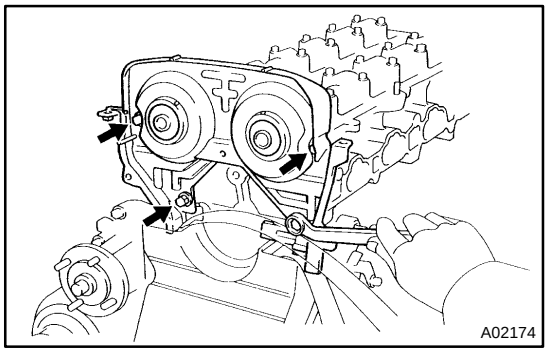

19. REMOVE NO.4 TIMING BELT COVER

Remove the 4 bolts and timing belt cover.

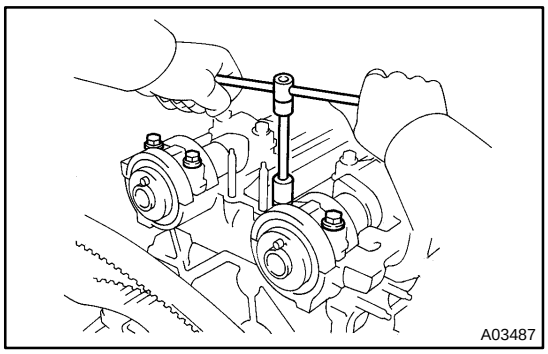

20. REMOVE CAMSHAFTS

(a) Uniformly loosen and remove the 4 No.1 camshaft bearing cap bolts.

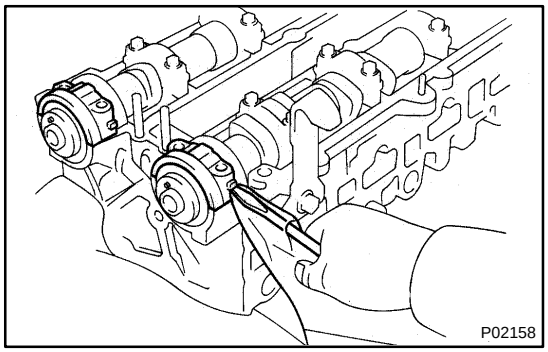

(b) Using a screwdriver, pry out the 2 No.1 camshaft bearing caps and oil seals.

NOTICE:

Be careful not to damage the cap. Tape the screwdriver tip.

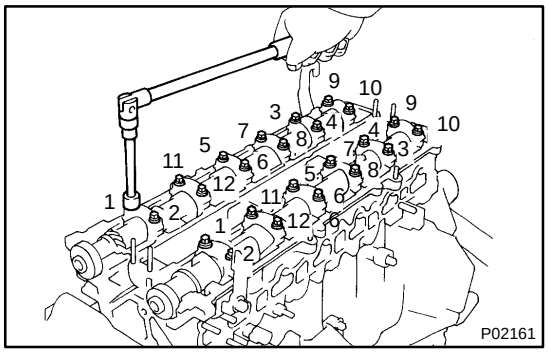

(c) Uniformly loosen and remove the 12 bearing cap bolts, in several passes, in the sequence shown, and remove the 6 bearing caps and camshaft.

(d) Remove the intake and exhaust camshafts.

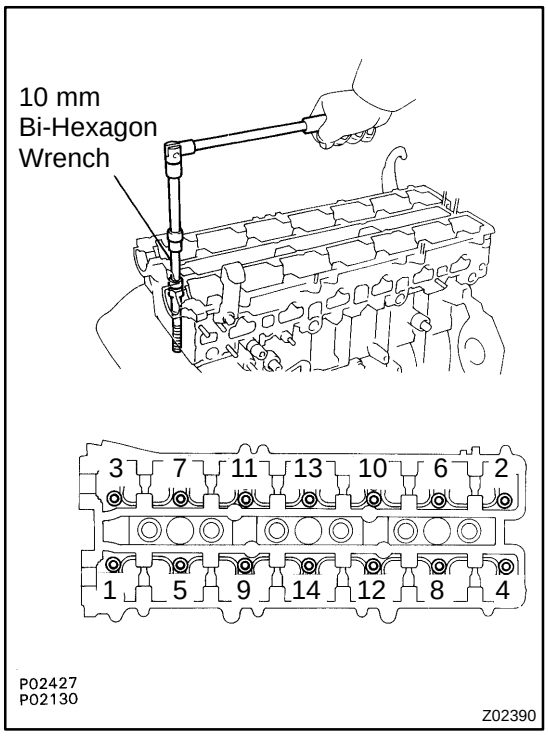

21. REMOVE CYLINDER HEAD

(a) Using a 10 mm bi-hexagon wrench, uniformly loosen and remove the 14 cylinder head bolts, in several passes, in the sequence shown.

NOTICE:

Cylinder head warpage or cracking could result from removing in incorrect order.

(b) Remove the 14 plate washers.

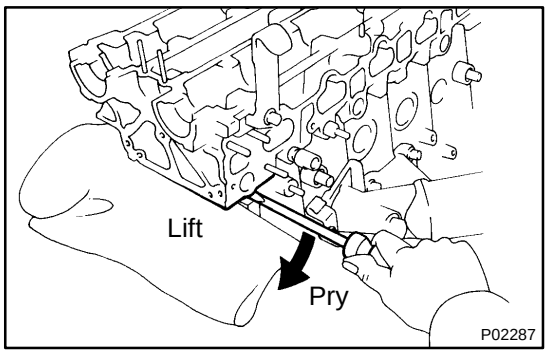

(c) Lift the cylinder head from the dowels on the cylinder block.

(d) Place the head on wooden blocks on a bench.

If the cylinder head is difficult to lift off, pry with a screwdriver between the cylinder head and block projection.

NOTICE:

Be careful not to damage the contact surfaces of the cylinder head and cylinder block.

PP0QG-01

SSM (Special Service Materials)

08826-00080	Seal Packing Black or equivalent (FIPG)	No.1 camshaft bearing cap Cylinder head Rear oil seal retainer
08833-00070	Adhesive 1324, THREE BOND 1324 or equivalent	Drive plate bolt (A/T) Heater union Union for oil cooler hose
08833-00080	Adhesive 1344 THREE BOND 1344 LOCTITE 242 or equivalent	Idler pulley pivot bolt Oil pressure switch

ENGINE MECHANICAL (2JZ-GTE)

PP0QD-01

SST (Special Service Tools)

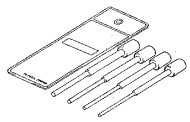	09201-10000	Valve Guide Bushing Remover & Replacer Set	
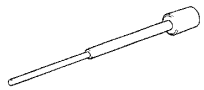	(09201-01060)	Valve Guide Bushing Remover & Replacer 6	
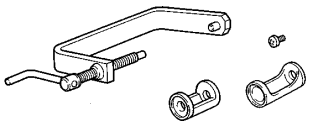	09202-70020	Valve Spring Compressor	
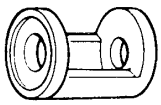	(09202-00010)	Attachment	
	09213-70010	Crankshaft Pulley Holding Tool	
	09222-30010	Connecting Rod Bushing Remover & Replacer	
	09223-15030	Oil Seal & Bearing Replacer	Crankshaft rear oil seal
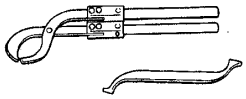	09248-55040	Valve Clearance Adjust Tool Set	
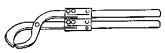	(09248-05410)	Valve Lifter Press	
	(09248-05420)	Valve Lifter Stopper	
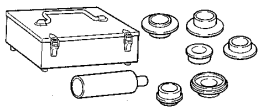	09316-6001 1	Transmission & Transfer Bearing Replacer	
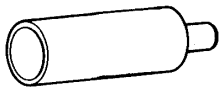	(09316-0001 1)	Replacer Pipe	Crankshaft front oil seal Camshaft oil seal

	(09316-00051)	Replacer "D"	Camshaft oil seal
	09330-00021	Companion Flange Holding Tool	Crankshaft pulley
	09816-30010	Oil Pressure Switch Socket	Knock sensor Oil pressure switch
	09843-18020	Diagnosis Check Wire	
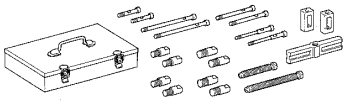	09950-50010	Puller C Set	
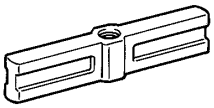	(09951-05010)	Hanger 150	Crankshaft pulley Crankshaft timing pulley
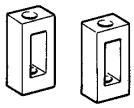	(09952-05010)	Slide Arm	Crankshaft pulley Crankshaft timing pulley
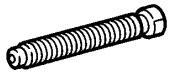	(09953-05010)	Center Bolt 100	Crankshaft pulley Crankshaft timing pulley
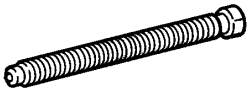	(09953-05020)	Center Bolt 150	Crankshaft pulley Crankshaft timing pulley
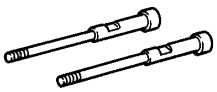	(09954-05010)	Claw No.1	Crankshaft timing pulley
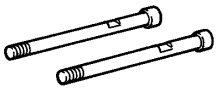	(09954-05030)	Claw No.3	Crankshaft pulley
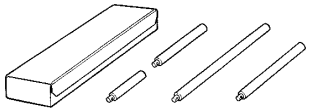	09950-70010	Handle Set	
	(09951-07100)	Handle 100	Crankshaft rear oil seal Valve guide bushing

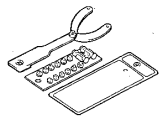	09960-10010	Variable Pin Wrench Set	
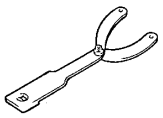	(09962-01000)	Variable Pin Wrench Arm Assy	Camshaft timing pulley PS pump pulley
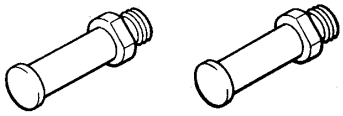	(09963-01000)	Pin 10	Camshaft timing pulley PS pump pulley

IGNITION SYSTEM

IG04X-02

ON-VEHICLE INSPECTION

NOTICE:

"Cold" and "Hot" in these sentences express the temperature of the coils themselves. "Cold" is from -10˚C (14˚F) to 50˚C (122˚F) and "Hot" is from 50˚C (122˚F) to 100˚C (212˚F).

1. INSPECT IGNITER AND SPARK TEST

Check that the spark occurs.

(1) Remove the ignition coil. (See page IG-6)
(2) Remove the spark plug.
(3) Install the spark plug to the ignition coil, and connect the ignition coil connecter.
(4) Ground the spark plug.
(5) Check if spark occurs while engine is being cranked.

NOTICE:

To prevent excess fuel being injected from the injectors during this test, do not crank the engine for more than 5 - 10 seconds at a time.

If a spark does not occur, do the test as follows:

SPARK TEST

↓ NO

CHECK CONNECTION OF IGNITION COIL AND IGNITER → BAD → Connect securely.

↓ OK

CHECK POWER SUPPLY TO IGNITION COIL AND IGNITER
1. Turn ignition switch to ON.
2. Check that there is battery positive voltage at ignition coil positive (+) terminal.

→ BAD → Check wiring between ignition switch to ignition coil and igniter.

↓ OK

CHECK RESISTANCE OF IGNITION COIL (See step 3)
Resistance: Cold Hot
Primary 0.54 - 0.84 Ω 0.68 - 0.98 Ω

→ BAD → Replace ignition coil.

↓ OK

CHECK RESISTANCE OF CAMSHAFT POSITION SENSOR (See step 4)
Resistance: Cold Hot
835 - 1,400 Ω 1,060 - 1,645 Ω

→ BAD → Replace camshaft position sensor.

↓ OK

CHECK RESISTANCE OF CRANKSHAFT POSITION SENSOR (See step 5)
Resistance: Cold Hot
1,630 - 2,740 Ω 2,065 - 3,225 Ω

→ BAD → Replace crankshaft position sensor.

↓ OK

CHECK IGT SIGNAL FROM ECM (See page DI-252)

→ BAD → Check wiring between ECM and igniter, and then try another ECM.

↓

TRY ANOTHER IGNITER

2. INSPECT SPARK PLUGS

NOTICE:

- **Never use a wire brush for cleaning.**
- **Never attempt to adjust the electrode gap on used a spark plug.**
- **Spark plugs should be replaced every 100,000 km (60,000 miles).**

(a) Remove the ignition coils assemblies.
(See page IG-6)

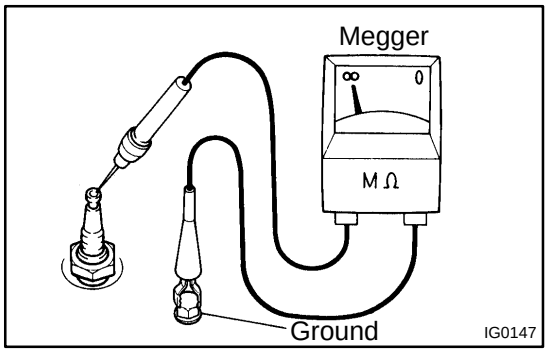

(b) Inspect the electrode.
Using a megger (insulation resistance meter), measure the insulation resistance.
Standard correct insulation resistance:
10 MΩ or more

If the resistance is less than specified, proceed to step (c).

HINT:

If a megger is not available, the following simple method of inspection provides fairly accurate results.

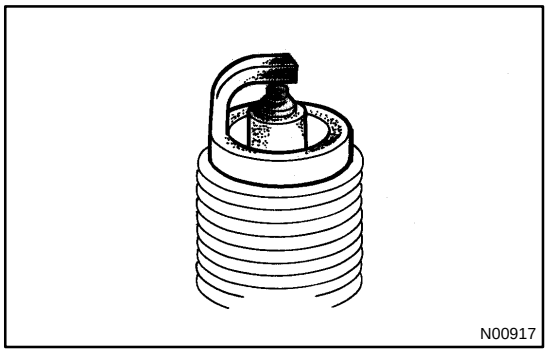

Simple Method:

- Quickly race the engine 5 times to 4,000 rpm.
- Remove the spark plug.
- Visually check the spark plug.
  If the electrode is dry ... OK
  If the electrode is wet ... Proceed to step (d).
- Reinstall the spark plug.

(c) Using a 16 mm plug wrench, remove the 6 spark plugs.

(d) Visually check the spark plug for thread damage and insulator damage.

If abnormal, replace the spark plug.

Recommended spark plug:

DENSO made	PK20R11
NGK made	BKR6EP11

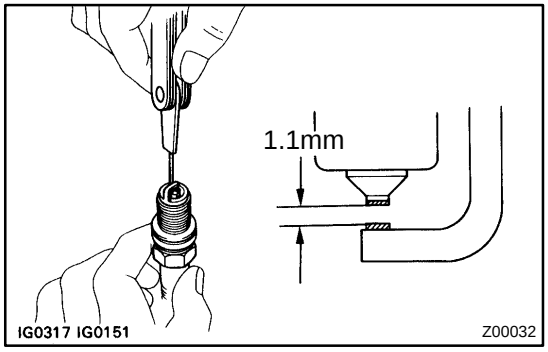

(e) Inspect the electrode gap.
Maximum electrode gap for used spark plug:
1.3 mm (0.051 in.)

If the gap is greater than maximum, replace the spark plug.
Correct electrode gap for new spark plug:
1.1 mm (0.043 in.)

NOTICE:

If adjusting the gap of a new spark plug, bend only the base of the ground electrode. Do not touch the tip. Never attempt to adjust the gap on the used plug.

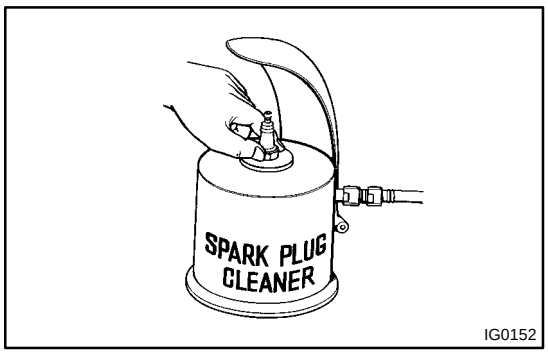

(f) Clean the spark plugs.

If the electrode has traces of wet carbon, allow it to dry and then clean with a spark plug cleaner.

Air pressure: Below 588 kPa (6 kgf/cm^2, 85 psi)
Duration: 20 seconds or less

HINT:

If there are traces of oil, remove it with gasoline before using the spark plug cleaner.

(g) Using a 16 mm plug wrench, reinstall the 6 spark plugs.
Torque: 18 N·m (180 kgf·cm, 13 ft·lbf)

(h) Reinstall the ignition coils assemblies.
(See page IG-7)

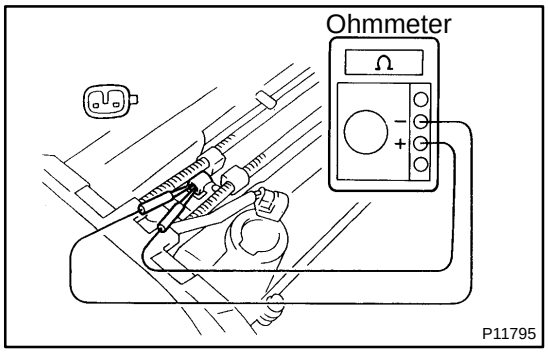

3. INSPECT IGNITION COILS

(a) Remove the No.3 timing belt cover.

(b) Disconnect the ignition coil connectors.

(c) Using an ohmmeter, measure the resistance between the terminals.

Primary coil resistance:

Cold	0.54 - 0.84 Ω
Hot	0.68 - 0.98 Ω

If the resistance is not as specified, replace the ignition coil.

(d) Reconnect the ignition coil connectors.

(e) Reinstall the No.3 timing belt cover.

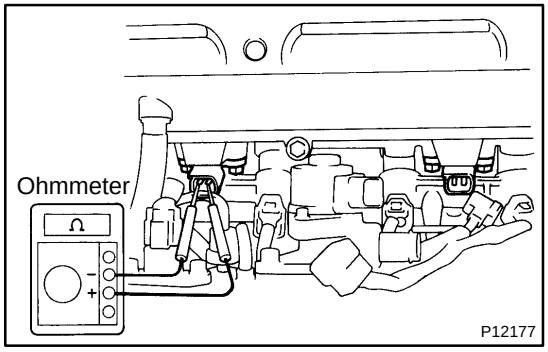

4. INSPECT CAMSHAFT POSITION SENSORS

(a) Disconnect the camshaft position sensor connectors.

(b) Using an ohmmeter, measure the resistance between terminals.

Resistance:

Cold	835 - 1,400 Ω
Hot	1,060 - 1,645 Ω

If the resistance is not as specified, replace the camshaft position sensor.

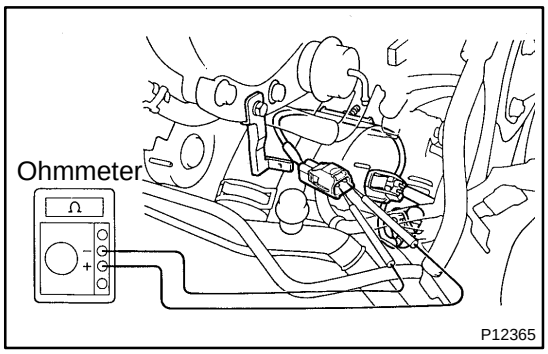

(c) Reconnect the camshaft position sensor connectors.

5. INSPECT CRANKSHAFT POSITION SENSOR

(a) Remove the No.2 air tube for the CAC.

(b) Disconnect the crankshaft position sensor connector.

(c) Using an ohmmeter, measure the resistance between terminals.

Resistance:

Cold	835 - 1,400 Ω
Hot	1,060 - 1,645 Ω

If the resistance is not as specified, replace the sensor.

(d) Reconnect the crankshaft position sensor connector.

(e) Reinstall the No.2 air tube for the CAC.

IGNITION COIL

COMPONENTS

IG04Y-01

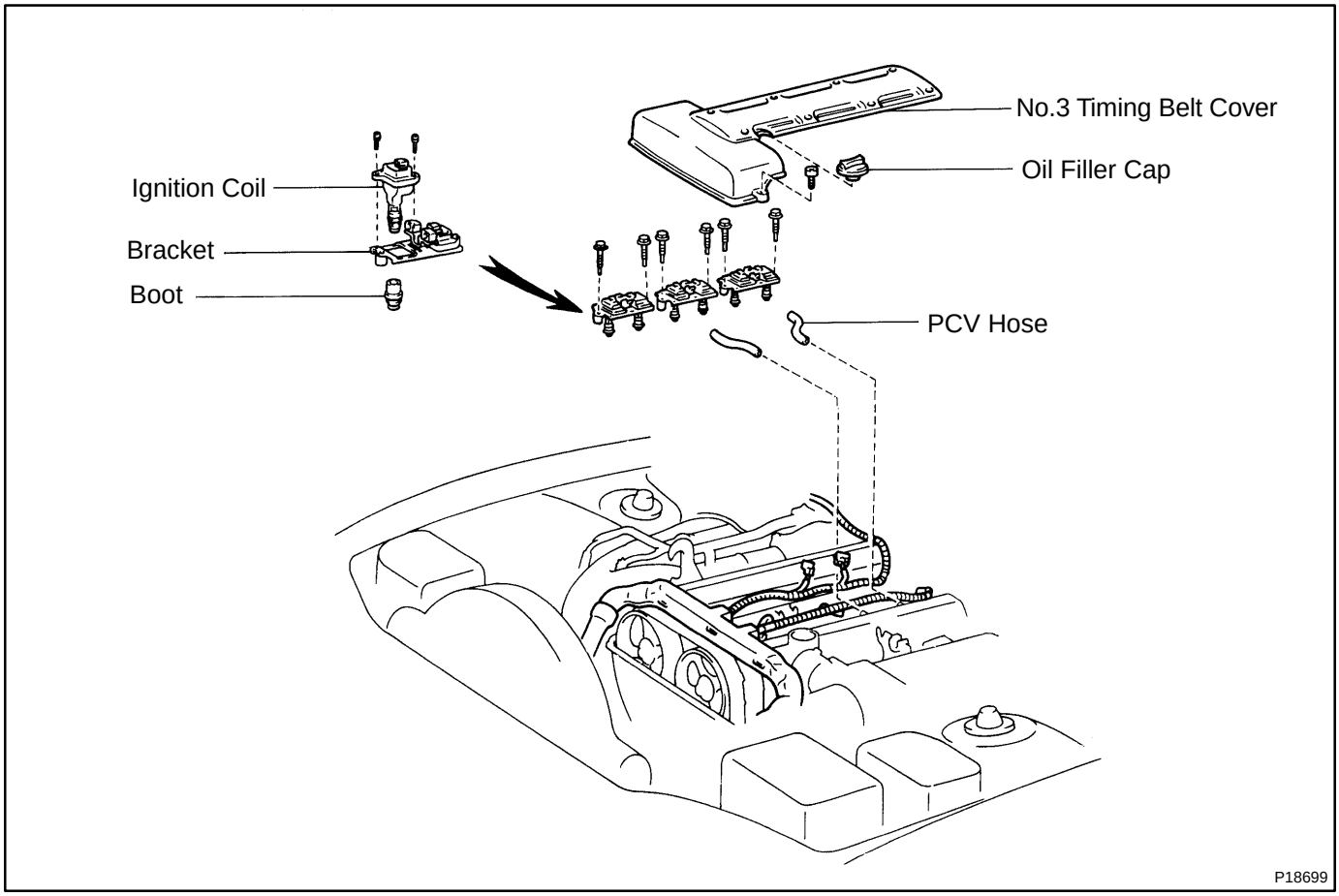

IG04Z-02

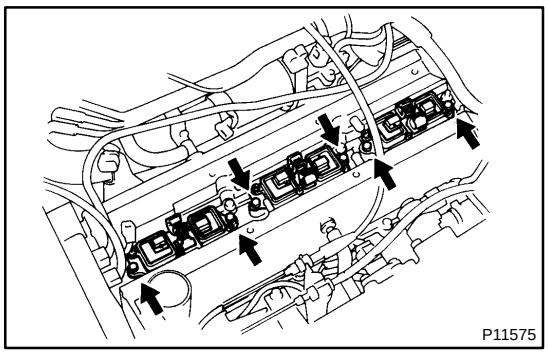

REMOVAL

1. REMOVE NO.3 TIMING BELT COVER

2. REMOVE PCV HOSES

3. DISCONNECT IGNITION COIL CONNECTORS

4. REMOVE BRACKET AND IGNITION COILS ASSEMBLIES

Remove the 2 bolts and 2 ignition coils assembly.

Torque: 8.8 N·m (90 kgf·cm, 78 in.·lbf)

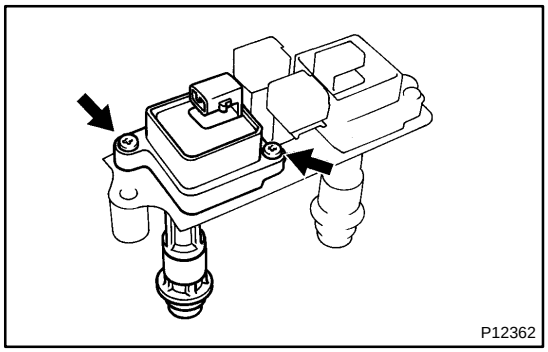

5. REMOVE IGNITION COILS FROM BRACKET

(a) Remove the rubber boot from the ignition coil.

(b) Remove the 2 screws and ignition coil.

CAMSHAFT POSITION SENSOR

IG051-01

COMPONENTS

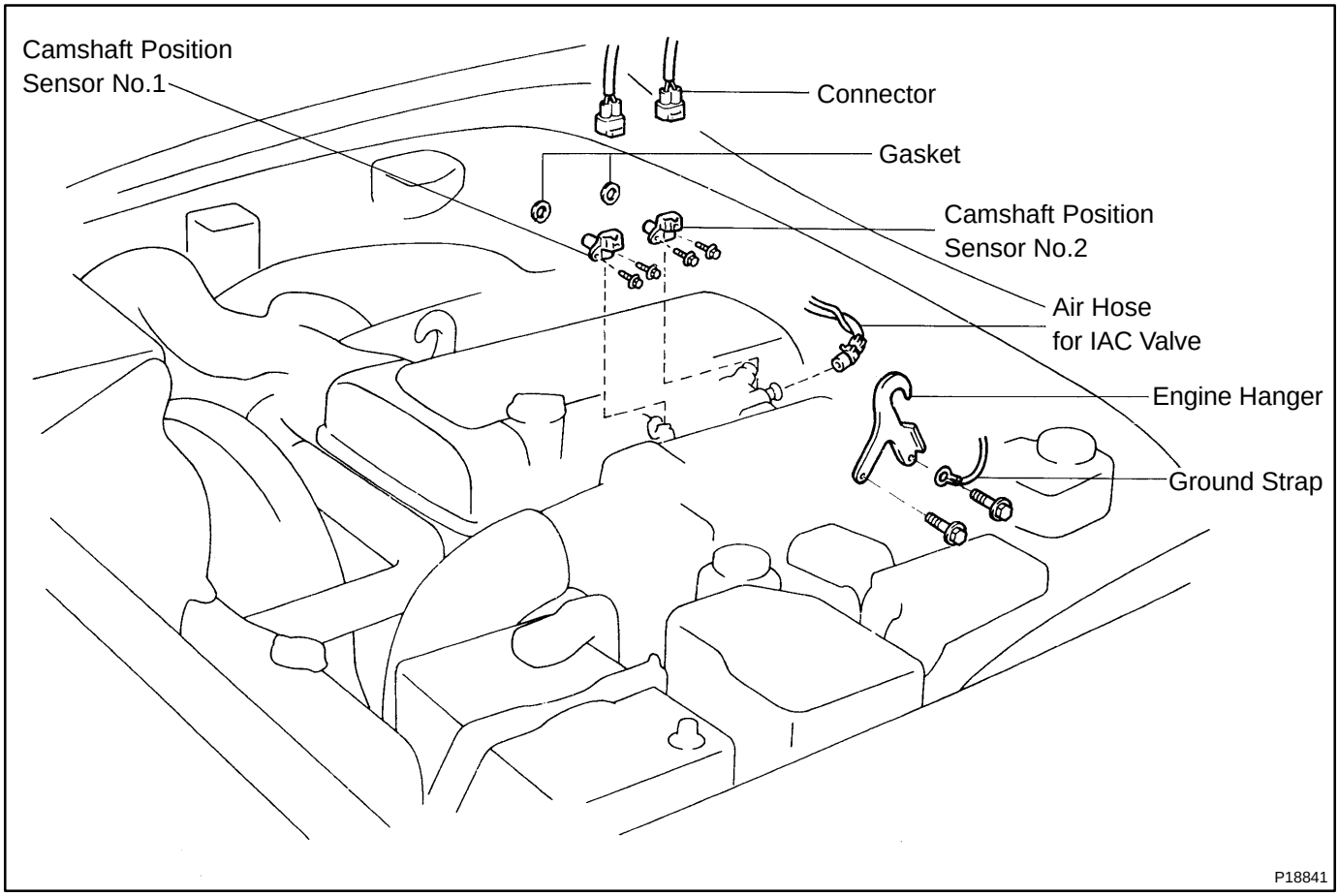

IG052-02

REMOVAL

1. DISCONNECT IAC VALVE CONNECTOR

2. DISCONNECT AIR HOSE FROM IAC VALVE

3. REMOVE ENGINE HANGER

Remove the 2 bolts, ground strap and engine hanger.

Torque: 39 N·m (400 kgf·cm, 29 ft·lbf)

4. DISCONNECT CAMSHAFT POSITION SENSOR CONNECTORS

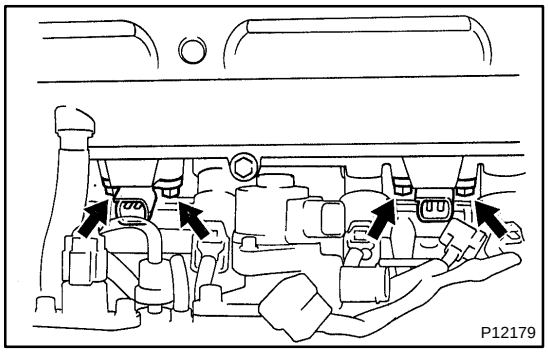

5. REMOVE CAMSHAFT POSITION SENSORS

Remove the 4 bolts, 2 camshaft position sensors and 2 gaskets.

Torque: 8.8 N·m (90 kgf·cm, 78 in.·lbf)

CRANKSHAFT POSITION SENSOR

IG054-01

COMPONENTS

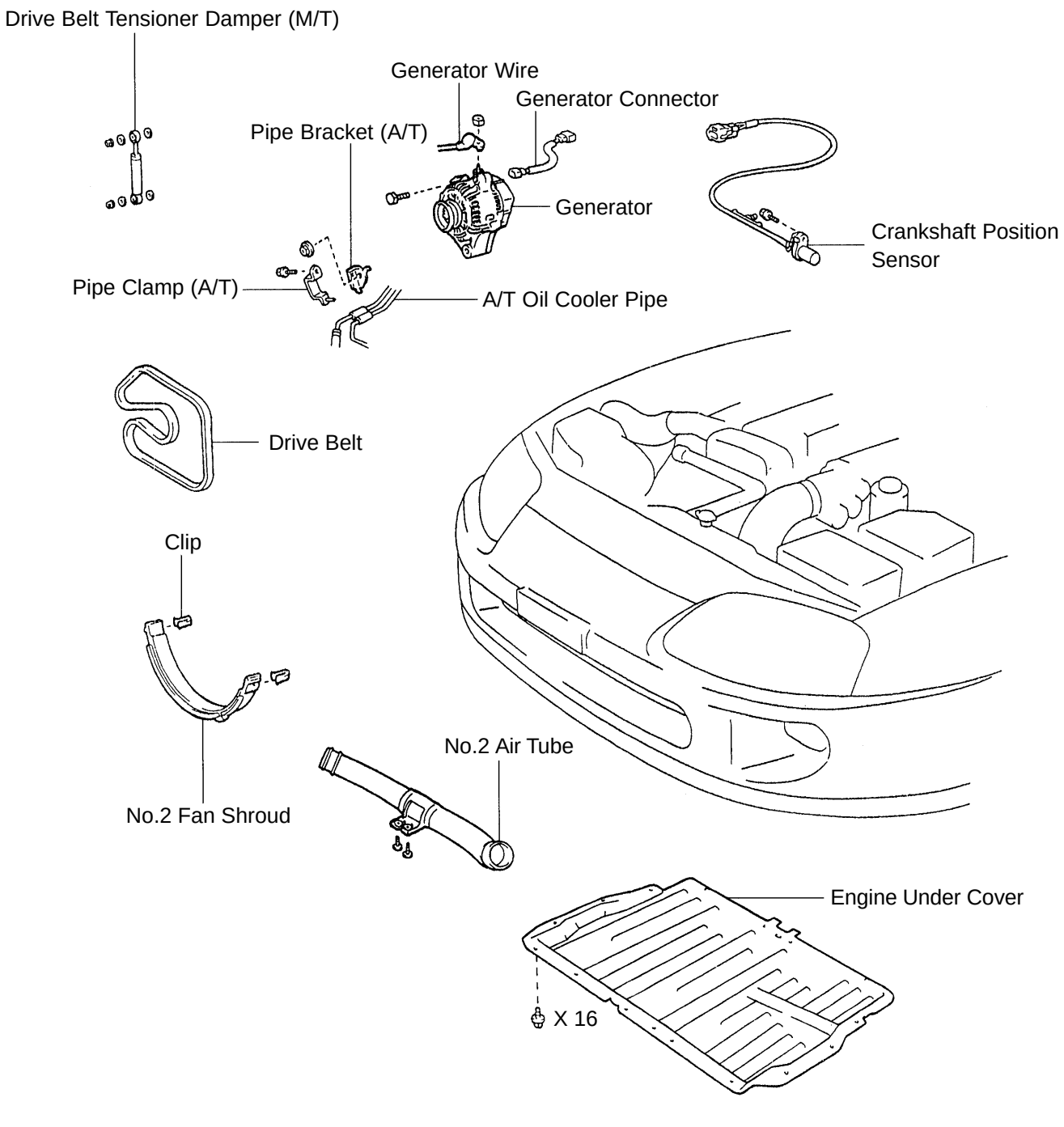

IG055-02

REMOVAL

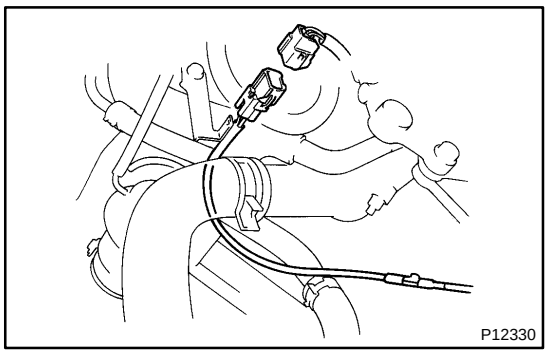

1. REMOVE GENERATOR
(See page CH-8)

2. DISCONNECT CRANKSHAFT POSITION SENSOR CONNECTOR

(a) Disconnect the sensor connector from the bracket.
(b) Disconnect the sensor connector from the wiring connector.

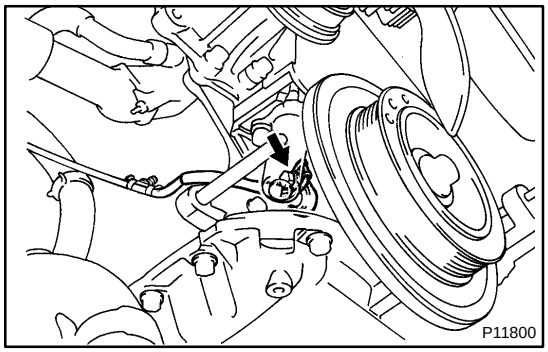

3. REMOVE CRANKSHAFT POSITION SENSOR

(a) Disconnect the wire clamp from the cylinder block.
(b) Remove the bolt and crankshaft position sensor.
Torque: 8.8 N·m (90 kgf·cm, 78 in.·lbf)

STARTER

COMPONENTS

ST04C-02

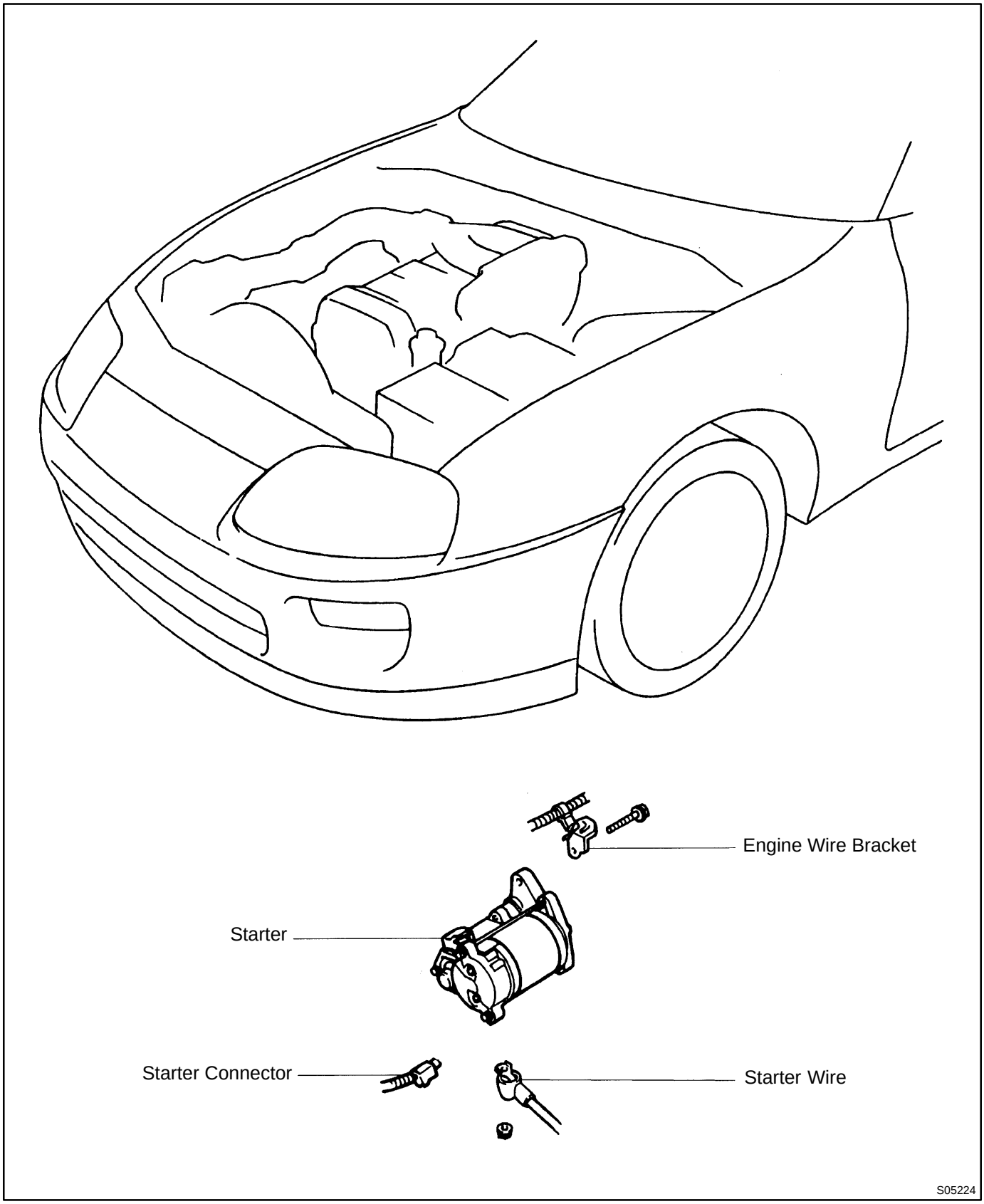

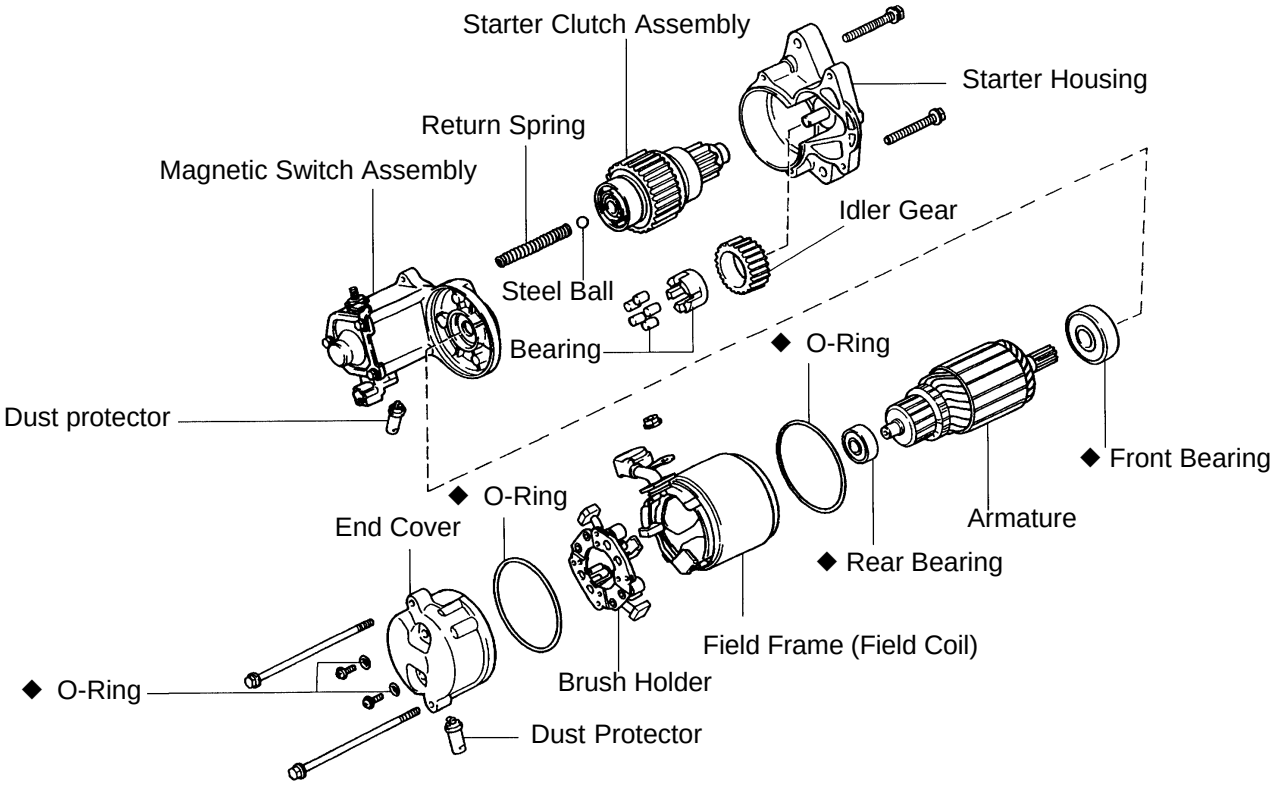

Magnetic Switch Assembly

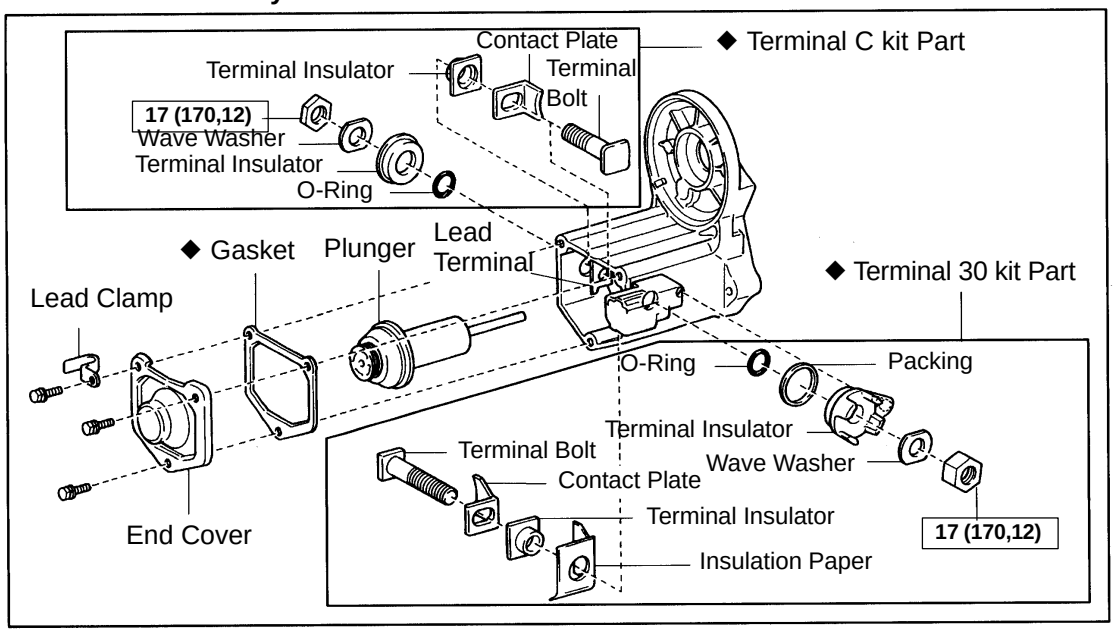

N·m (kgf·cm, ft·lbf) : Specified torque
◆ Non-reusable part

Z18832

OUTSIDE VEHICLE

MA01D-01

GENERAL MAINTENANCE

These are maintenance and inspection items which are considered to be the owner's responsibility. They can be done by the owner or they can have them done at a service shop.
These items include those which should be checked on a daily basis, those which, in most cases, do not require (special) tools and those which are considered to be reasonable for the owner to do.
Items and procedures for general maintenance are as follows.

1. GENERAL NOTES

- Maintenance items may vary from country to country. Check the owner's manual supplement in which the maintenance schedule is shown.
- Every service item in the periodic maintenance schedule must be performed.
- Periodic maintenance service must be performed according to whichever interval in the periodic maintenance schedule occurs first, the odometer reading (miles) or the time interval (months).
- Maintenance service after the last period should be performed at the same interval as before unless otherwise noted.
- Failure to do even one item an cause the engine to run poorly and increase exhaust emissions.

2. TIRES

(a) Check the pressure with a gauge. If necessary, adjust.
(b) Check for cuts, damage, uneven or excessive wear.

3. WHEEL NUTS

When checking the tires, check the nuts for looseness or for missing nuts. If necessary, tighten them.

4. WINDSHIELD WIPER BLADES

Check for wear or cracks whenever they do not wipe clean. If necessary, replace.

5. FLUID LEAKS

(a) Check underneath for leaking fuel, oil, water or other fluid.
(b) If you smell gasoline fumes or notice any leak, have the cause found and corrected.

6. DOORS AND ENGINE HOOD

(a) Check that all doors and the tailgate operate smoothly, and that all latches lock securely.
(b) Check that the engine hood secondary latch secures the hood from opening when the primary latch is released.

UNDER HOOD

MA01F-02

GENERAL MAINTENANCE

1. GENERAL NOTES

- Maintenance items may vary from country to country. Check the owner's manual supplement in which the maintenance schedule is shown.
- Every service item in the periodic maintenance schedule must be performed.
- Periodic maintenance service must be performed according to whichever interval in the periodic maintenance schedule occurs first, the odometer reading (miles) or the time interval (months).
- Maintenance service after the last period should be performed at the same interval as before unless otherwise noted.
- Failure to do even one item an cause the engine to run poorly and increase exhaust emissions.

2. WINDSHIELD WASHER FLUID

Check that there is sufficient fluid in the tank.

3. ENGINE COOLANT LEVEL

Check that the coolant level is between the "FULL" and "LOW" lines on the see-through reservoir.

4. RADIATOR AND HOSES

(a) Check that the front of the radiator is clean and not blocked with leaves, dirt or bugs.

(b) Check the hoses for cracks, kinks, rot or loose connections.

5. BATTERY ELECTROLYTE LEVEL

Check that the electrolyte level of all battery cells is between the upper and lower level lines on the case.

6. BRAKE AND CLUTCH FLUID LEVELS

Check that the brake and clutch fluid levels are near the upper level line on the see-through reservoirs.

7. ENGINE DRIVE BELT

Check drive belt for fraying, cracks, wear or oil contamination.

8. ENGINE OIL LEVEL

Check the level on the dipstick with the engine turned off.

9. POWER STEERING FLUID LEVEL

- Check the level on the dipstick.
- The level should be in the "HOT" or "COLD" range depending on the fluid temperature.

10. AUTOMATIC TRANSMISSION FLUID LEVEL

(a) Park the vehicle on a level surface.

(b) With the engine idling and the parking brake applied, shift the selector into all positions from "P" to "L", and then shift into "P" position.

(c) Pull out the dipstick and wipe off the fluid with a clean rag. Re-insert the dipstick and check that the fluid level is in the HOT range.

(d) Do this check with the fluid at normal driving temperature (70 - 80˚C, 158 - 176˚F).

HINT:

Wait until the engine cools down (approx. 30 min.) before checking the fluid level after extended driving at high speeds, in hot weather, in heavy traffic or pulling a trailer.

11. EXHAUST SYSTEM

If any change in the sound of the exhaust or smell of the exhaust fumes is noticed, have the cause located and corrected.

INSIDE VEHICLE

MA01E-01

GENERAL MAINTENANCE

These are maintenance and inspection items which are considered to be the owner's responsibility. They can be done by the owner or they can have them done at a service shop.
These items include those which should be checked on a daily basis, those which, in most cases, do not require (special) tools and those which are considered to be reasonable for the owner to do.
Items and procedures for general maintenance are as follows.

1. GENERAL NOTES

- Maintenance items may vary from country to country. Check the owner's manual supplement in which the maintenance schedule is shown.
- Every service item in the periodic maintenance schedule must be performed.
- Periodic maintenance service must be performed according to whichever interval in the periodic maintenance schedule occurs first, the odometer reading (miles) or the time interval (months).
- Maintenance service after the last period should be performed at the same interval as before unless otherwise noted.
- Failure to do even one item an cause the engine to run poorly and increase exhaust emissions.

2. LIGHTS

(a) Check that the headlights, stop lights, taillights, turn signal lights, and other lights are all working.
(b) Check the headlight aim.

3. WARNING LIGHTS AND BUZZERS

Check that all warning lights and buzzers function properly.

4. HORN

Check that it is working.

5. WINDSHIELD GLASS

Check for scratches, pits or abrasions.

6. WINDSHIELD WIPER AND WASHER

(a) Check operation of the wipers and washer.
(b) Check that the wipers do not streak.

7. WINDSHIELD DEFROSTER

Check that air comes out from the defroster outlet when operating the heater or air conditioner.

8. REAR VIEW MIRROR

Check that it is mounted securely.

9. SUN VISORS

Check that they move freely and are mounted securely.

10. STEERING WHEEL

Check that it has the specified freeplay. Be alert for changes in steering condition, such as hard steering, excessive freeplay or strange noises.

11. SEATS

(a) Check that the seat adjusters operate smoothly.
(b) Check that all latches lock securely in any position.
(c) Check that the head restraints move up and down smoothly and that the locks hold securely in any latch position.
(d) For fold-down seat backs, check that the latches lock securely.

12. SEAT BELTS

(a) Check that the seat belt system such as the buckles, retractors and anchors operate properly and smoothly.
(b) Check that the belt webbing is not cut, frayed, worn or damaged.

13. ACCELERATOR PEDAL

Check the pedal for smooth operation and uneven pedal effort or catching.

14. CLUTCH PEDAL (See page CL-3)

(a) Check the pedal for smooth operation.

(b) Check that the pedal has the proper freeplay.

15. BRAKE PEDAL (See page BR-7)

(a) Check the pedal for smooth operation.

(b) Check that the pedal has the proper reserve distance and freeplay.

(c) Check the brake booster function.

16. BRAKES

At a safe place, check that the brakes do not pull to one side when applied.

17. PARKING BRAKE (See page BR-9)

(a) Check that the lever has the proper travel.

(b) On a safe incline, check that the vehicle is held securely with only the parking brake applied.

18. AUTOMATIC TRANSMISSION ”PARK” MECHANISM

(a) Check the lock release button of the selector lever for proper and smooth operation.

(b) On a safe incline, check that the vehicle is held securely with the selector lever in ”P” position and all brakes released.

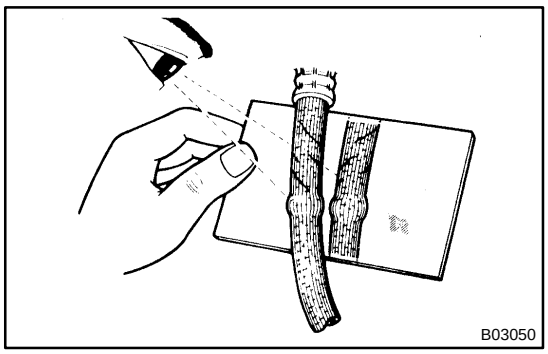

BRAKE

MA01H-01

INSPECTION

1. INSPECT BRAKE LINE PIPES AND HOSES

HINT:

Check in a well lighted area. Check the entire circumference and length of the brake hoses using a mirror as required. Turn the front wheels fully right or left before checking the front brake.

(a) Check all brake lines and hoses for:
- Damage
- Wear
- Deformation
- Cracks
- Corrosion
- Leaks
- Bends
- Twists

(b) Check all clamps for tightness and connections for leakage.

(c) Check that the hoses and lines are clear of sharp edges, moving parts and the exhaust system.

(d) Check that the lines installed in grommets pass through the center of the grommets.

2. INSPECT FRONT AND REAR BRAKE PADS AND DISCS

2JZ-GE:

Front: See page BR-23

Rear: See page BR-43

2JZ-GTE:

Front: See page BR-26

Rear: See page BR-46

HINT:

If a squealing or scraping noise comes from the brake during driving, check the pad wear indicator to see if it is contacting the disk rotor. If so, the disk pad should be replaced.

3. INSPECT PARKING BRAKE LININGS AND DRUMS (See page BR-62)

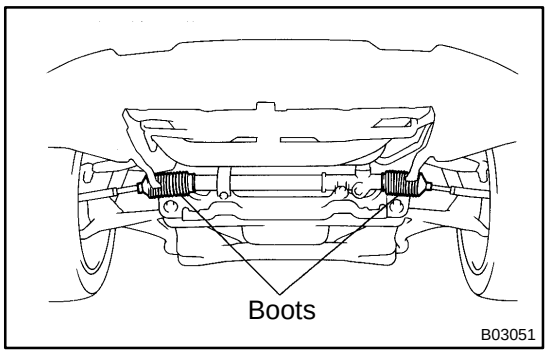

CHASSIS

MA01I-02

INSPECTION

1. INSPECT STEERING LINKAGE

(a) Check the steering wheel freeplay.
(See page SR-8)

(b) Check the steering linkage for looseness or damage.
Check that:

- Tie rod ends do not have excessive play.
- Dust seals and boots are not damaged.
- Boot clamps are not loose.

2. INSPECT SRS AIRBAG (Seep page RS-9)

3. INSPECT STEERING GEAR HOUSING OIL

Check the steering gear housing for oil leakage.

4. INSPECT BALL JOINT DUST COVERS

Visually check the dust covers for damage.

5. INSPECT TRANSMISSION OIL (FLUID) AND DIFFERENTIAL OIL

Visually check the transmission and differential for oil (fluid) leakage.

If leakage is found, check for the cause and repair it.

6. REPLACE MANUAL TRANSMISSION OIL
(W58: See page MT-4)
(V160: See page MT-3)

7. REPLACE AUTOMATIC TRANSMISSION FLUID
(2JZ-GE: See page AT-2)
(2JZ-GTE: See page AT-2)

8. REPLACE DIFFERENTIAL OIL (See page SA-60)

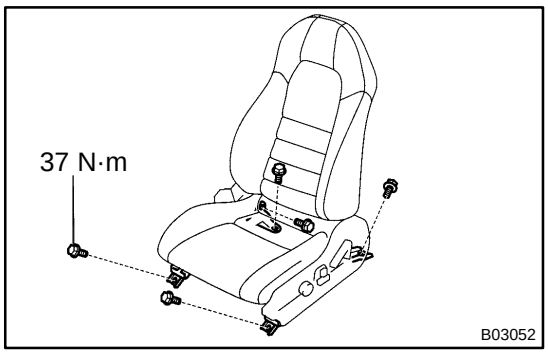

BODY

MA01J-01

INSPECTION

1. TIGHTEN BOLTS AND NUTS ON CHASSIS AND BODY

Tighten these parts:

- Front seat - to -body mounting bolts

Torque: 37 N·m (375 kgf·cm, 27 ft·lbf)

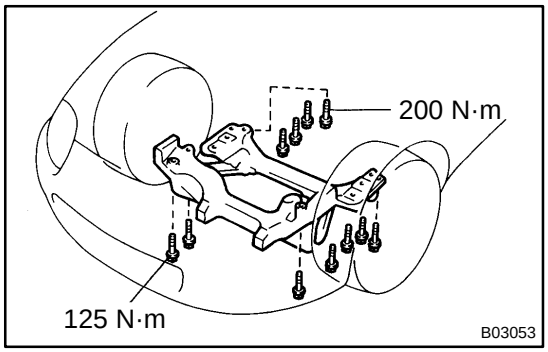

- Front suspension member-to-body mounting nuts

Torque:
Front side 125 N·m (1,280kgf·cm,92 ft·lbf)
Rear side 200 N·m (2,040 kgf·cm,148ft·lbf)

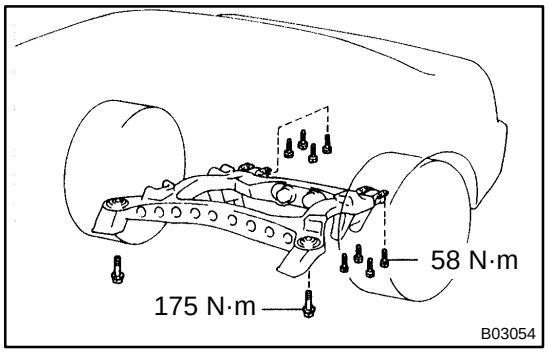

- Rear suspension member-to-body mounting bolts

Torque: 175 N·m (1,790 kgf·cm, 129 ft·lbf)

- Rear suspension member rear cushion - to - body mounting bolts

Torque: 58 N·m (590 kgf·cm, 43 ft·lbf)

2. FINAL INSPECTION

(a) Check the operation of the body parts:

- Hood:
  Auxiliary catch operate properly
  Hood locks securely when closed
- Front doors:
  Door lock operates properly
  Doors close properly
- Back door:
  Door lock operates properly
- Seats:
  Seat adjusts easily and locks securely in any position
  Front seat back locks securely in any position
  Folding-down rear seat backs lock securely

(b) Road test:

- Check the engine and chassis for abnormal noises.
- Check that the vehicle does not wander or pull to one side.
- Check that the brake work properly and do not drag.
- Perform setting of the parking brake shoes and disc.

(c) Be sure to deliver a clean car. especially check:
- Steering wheel
- Shift lever knob
- All switch knobs
- Seats

ENGINE

MA01G-01

INSPECTION

1. REPLACE TIMING BELT
(2JZ-GE: See page EM-17)
(2JZ-GTE: See page EM-19)

2. INSPECT DRIVE BELT
(See page CH-2)

3. REPLACE SPARK PLUGS
(2JZ-GE: See page IG-1)
(2JZ-GTE: See page IG-1)

4. INSPECT AIR FILTER

(a) Remove the air filter.

(b) Visually check that the air filter is not excessively damaged or oily.

If necessary, replace the air filter.

(c) Clean the filter with compressed air.
First blow from the inside thoroughly, then blow off the outside of the filter.

(d) Reinstall the air filter and air cleaner case.

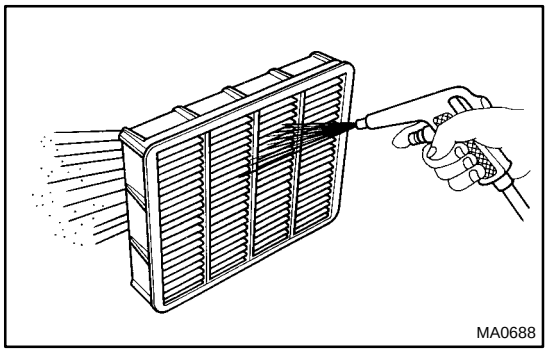
MA0688

5. REPLACE AIR FILTER

Replace the air filter with a new one.

6. REPLACE ENGINE OIL AND OIL FILTER
(See page LU-4)

7. REPLACE ENGINE COOLANT
(See page CO-2)

8. INSPECT CHARCOAL CANISTER
(2JZ-GE: See page EC-5)
(2JZ-GTE: See page EC-5)

9. REPLACE GASKET IN FUEL TANK CAP
(2JZ-GE: See page EC-5)
(2JZ-GTE: See page EC-5)

10. INSPECT FUEL LINES AND CONNECTIONS
(2JZ-GE: See page SF-32)
(2JZ-GTE: See page SF-34)

11. INSPECT EXHAUST PIPES AND MOUNTINGS

Visually check the pipes, hangers and connections for severe corrosion, leaks or damages.

12. ADJUST VALVE CLEARANCE
(2JZ-GE: See page EM-4)
(2JZ-GTE: See page EM-4)

Foreword

Welcome to the growing group of value–conscious people who drive Toyotas. We are proud of the advanced engineering and quality construction of each vehicle we build.

This Owner's Manual explains the features of your new Toyota. Please read it and follow the instructions carefully so that you can enjoy many years of safe motoring.

When it comes to service, remember that your Toyota dealer knows your vehicle best and is interested in your complete satisfaction. He will provide quality maintenance and any other assistance you may require.

Please leave this Owner's Manual in this vehicle at the time of resale. The next owner will need this information also.

All information and specifications in this manual are current at the time of printing. However, because of Toyota's policy of continual product improvement, we reserve the right to make changes at any time without notice.

Please note that this manual applies to all models and explains all equipment, including options. Therefore, you may find some explanations for equipment not installed in your vehicle.

TOYOTA MOTOR CORPORATION

® 1996 TOYOTA MOTOR CORPORATION

All rights reserved. This material may not be reproduced or copied, in whole or in part, without the written permission of Toyota Motor Corporation.

New vehicle warranty

Your new vehicle is covered by the following Toyota limited warranties:

- ◀ New vehicle warranty
- ◀ Emission control systems warranty
- ◀ Others

For further information, please refer to the separate “Owner’s Guide”, “Owner’s Manual Supplement” or “Warranty Booklet”.

Your responsiblity for maintenance

It is the owner’s responsibility to make sure that the specified maintenance is performed. Part 6 gives details of these maintenance requirements. Also included in Part 6 is general maintenance. For scheduled maintenance information, please refer to the separate “Owner’s Manual Supplement/Maintenance Schedule”.

Accessories, spare parts and modification of your Toyota

A wide variety of non genuine spare parts and accessories for Toyota vehicles are currently available in the market. You should know that Toyota does not warrant these products and is not responsible either for their performance, repair or replacement, or for any damage they may cause to, or adverse effect they may have on, your Toyota vehicle.

This vehicle should not be modified with non genuine Toyota products. Modification with non genuine Toyota products could affect its performance, safety or durability, and may even violate governmental regulations. In addition, damage or performance problems resulting from the modification may not be covered under warranty.

Spark ignition system of your Toyota

The spark ignition system of your Toyota meets all requirements of the Canadian Interference–Causing Equipment Standard.

Installation of a mobile two–way radio system

As the installation of a mobile two–way radio system in your vehicle could affect electronic systems such as multiport fuel injection systems/sequential multiport fuel injection system, cruise control system, anti–lock brake system and SRS airbag system, be sure to check with your Toyota dealer for precautionary measures or special instructions regarding installation.

Scrapping of your Toyota

The SRS airbag devices in your Toyota contains explosive chemicals. If the vehicle is scrapped with the airbag left as it is, it may cause an accident such as a fire. Be sure to have the SRS airbag system removed and disposed of by a qualified service shop or by your Toyota dealer before you dispose of your vehicle.

Quick index

® If a service reminder indicator or warning buzzer comes on 61
® If your vehicle will not start 135
® If your engine stalls while driving 138
® If your vehicle overheats 139
® If you have a flat tire 140
® If your vehicle needs to be towed 146
® Tips for driving during break–in period 117
® How to start the engine 129
® General maintenance 158
® Complete index 203

Gas station information

Fuel type:

Premium UNLEADAD gasoline**,** Research Octane Number 96 (Octane Rating 91) or higher

See page 117 for detailed information.

Fuel tank capacity:

70 L (18.5 gal., 15.4 lmp. gal.)

Engine oil:

API SH, “Energy–Conserving II” multigrade engine oil or ILSAC multigrade engine oil is recommended.

Use SAE 5W–30 if normal temperatures are above –18◀C (0◀F).

See page 170 for detailed information.

Tire information: See pages 173 through 178.

Tire pressure: See page 198.

Publication No. OM14525U
Part No. 01999-14525
Printed in Japan 01–9607–00 I
スープラ(北米U)

Part 1

OPERATION OF INSTRUMENTS AND CONTROLS—

Chapter 1–1
Overview of instruments and controls

- Instrument panel overview
- Instrument cluster overview
- Indicator symbols on the instrument panel

Instrument panel overview

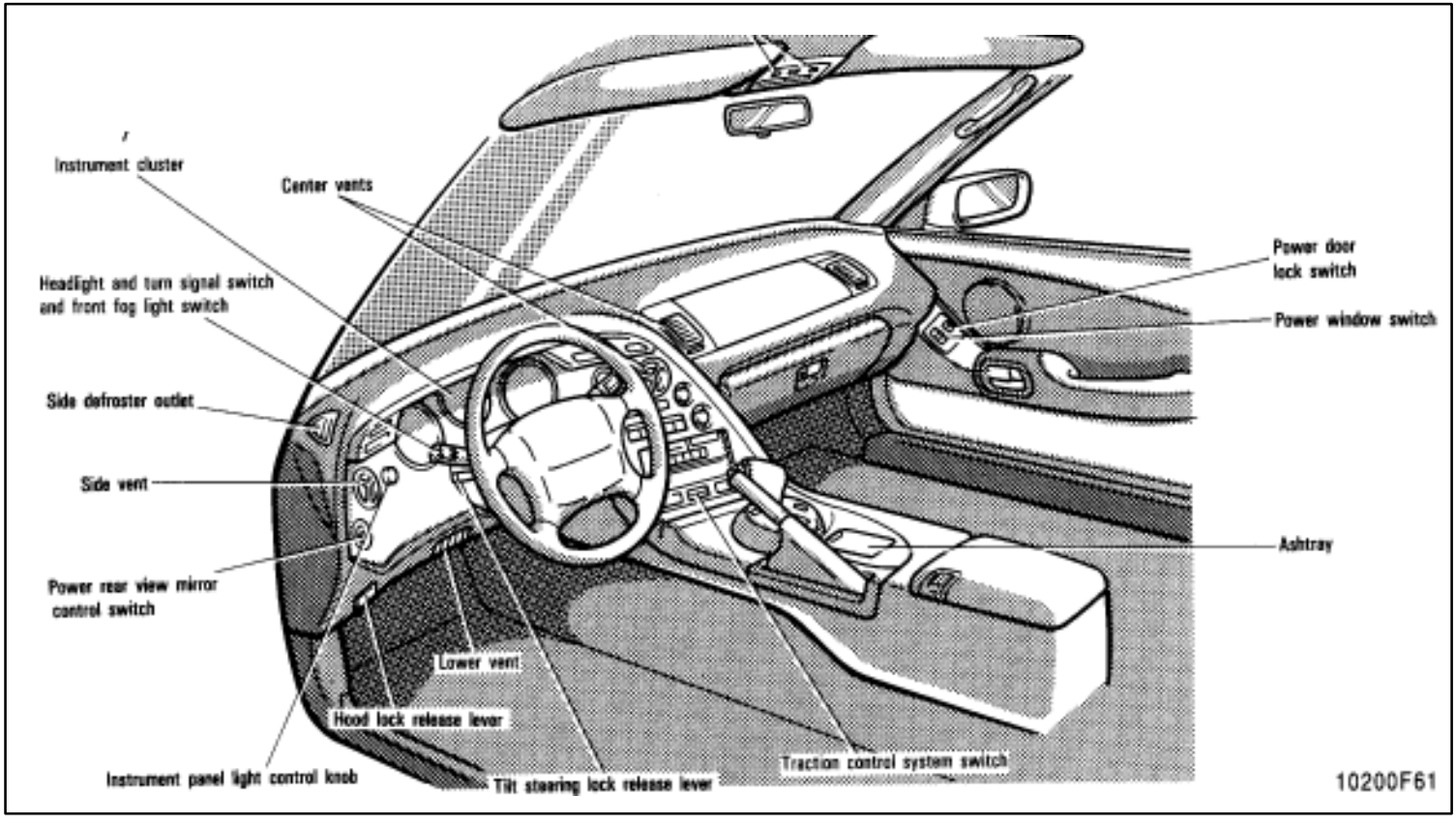

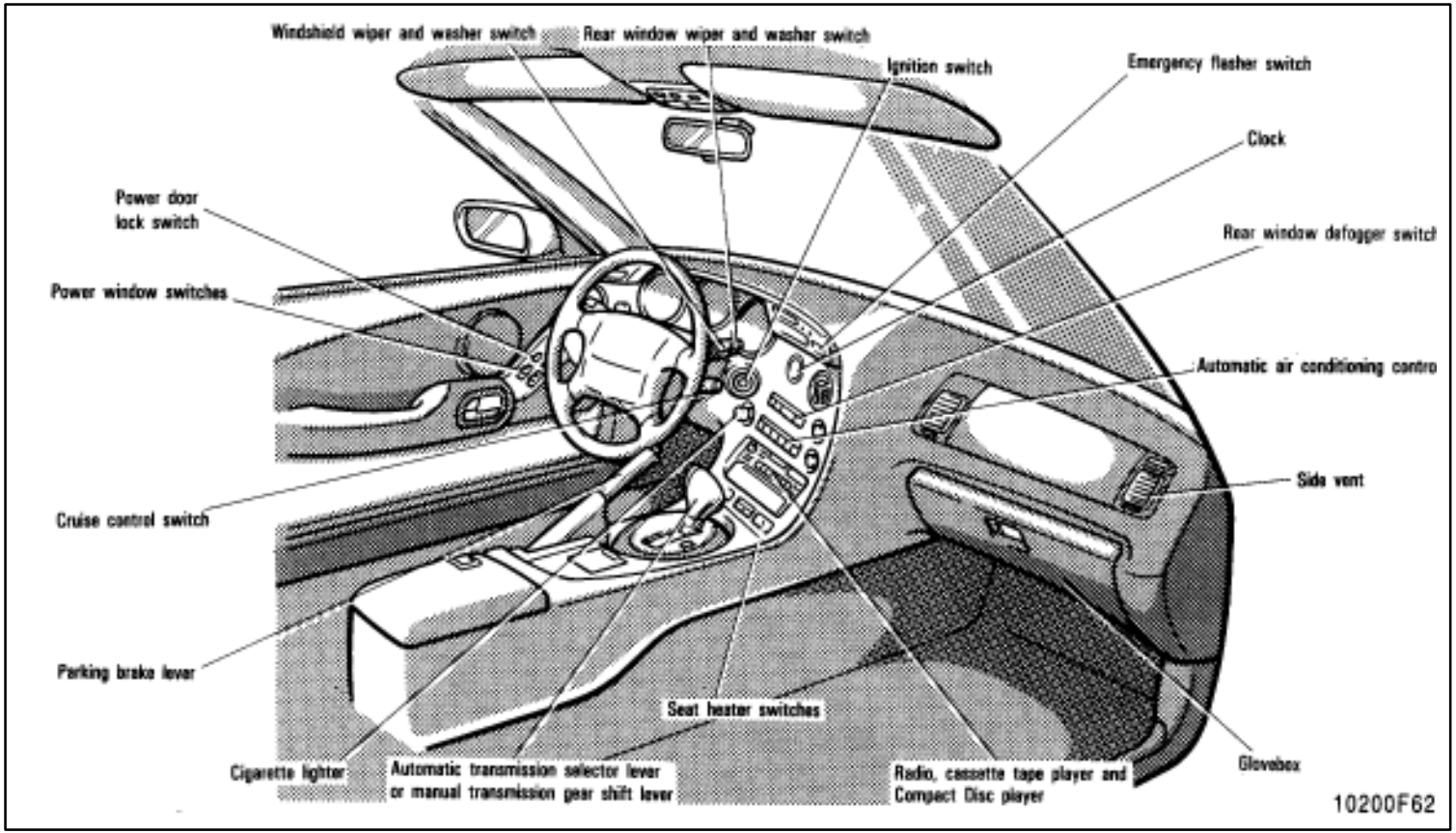
Windshield wiper and washer switch
Rear window wiper and washer switch
Ignition switch
Emergency flasher switch
Clock
Power door lock switch
Rear window defogger switch
Power window switches
Automatic air conditioning contro
Side vent
Cruise control switch
Parking brake lever
Seat heater switches
Glovebox
Cigarette lighter
Automatic transmission selector lever or manual transmission gear shift lever
Radio, cassette tape player and Compact Disc player
10200F62

Instrument cluster overview

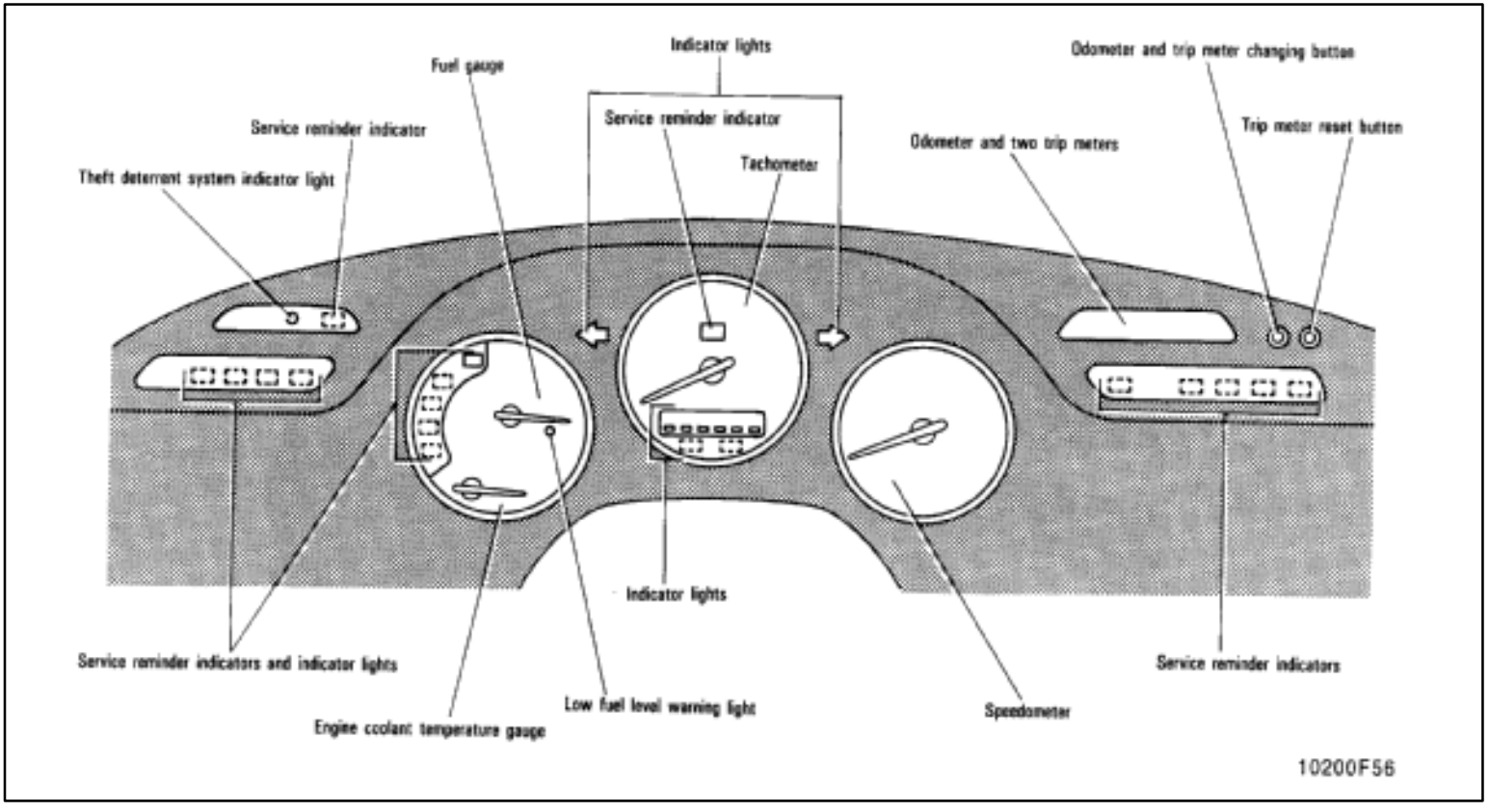

Indicator symbols on the instrument panel

	Master warning light *1
BRAKE (type A)  (type B)	Brake system warning light *1
	Seat belt reminder light*1
	Discharge warning light*1
	Malfunction indicator light*1
	Low oil pressure warning light*1
	Low engine oil level warning light*1

ABS (type A)  (type B)	Anti–lock brake system warning light *1
	Open door warning light*1
	Rear light failure warning light*1
	SRS airbag warning light*1
TRAC OFF	Traction control system off indicator/ warning light*1
	Slip indicator light
SNOW	Snow mode indicator light

	Turn signal indicator lights
	Headlight high beam indicator light
O/D OFF	Overdrive–off indicator light
MANU	Automatic transmission manual mode indicator light *2
P R N D 2 L	Automatic transmission indicator lights
CRUISE	Cruise control indicator light *3

*1: For details, see “Service reminder indicators and warning buzzers” in Chapter 1–5.

*2: If this light flashes, see “Automatic transmission” in Chapter 1–6.

*3 If this light flashes, see “Cruise control” in Chapter 1–6.

Part 1

OPERATION OF INSTRUMENTS AND CONTROLS—

Chapter 1–2
Keys and Doors

® Keys
® Side doors
® Power windows
® Back door
® Hood
® Theft deterrent system
® Fuel tank cap
® Sport roof

Keys

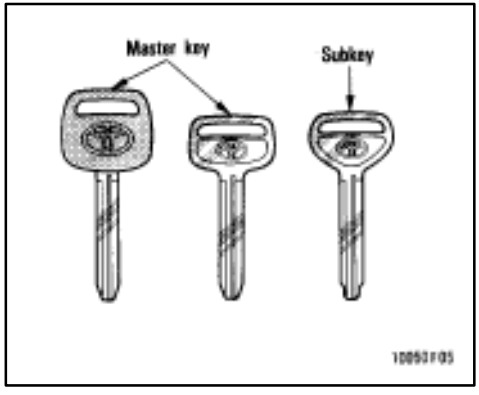

The master key works in every lock. The subkey will not work in the glovebox.

To protect things locked in the glovebox when you have your vehicle parked, leave the subkey with the attendant.

Since the side doors and back door can be locked without a key, you should always carry a spare master key in case you accidentally lock your keys inside the vehicle.

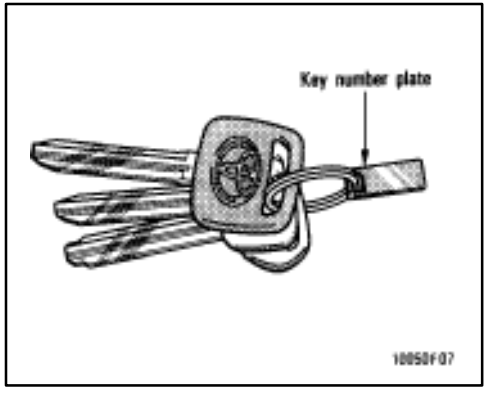

Keep the key number plate in a safe place such as your wallet, not in the vehicle.

If you should lose your keys of if you need additional keys, duplicates can be made by a Toyota dealer using the key number.

You should also put a copy of the key number with your important papers.

Side doors

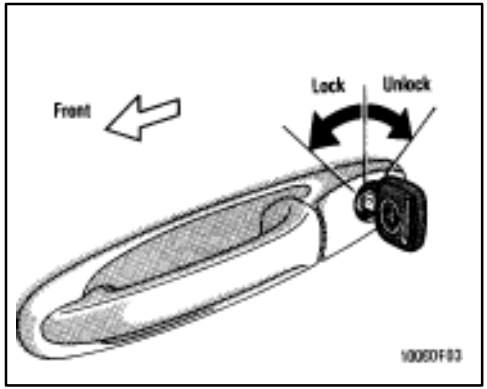

LOCKING WITH KEY

Turn the key toward the front of the vehicle to lock and towards the back to unlock.

Both doors locks and unlock simultaneously with either door. In the driver's door lock, turning the key once will unlock the driver's door and twice in succession will unlock both doors simultaneously.

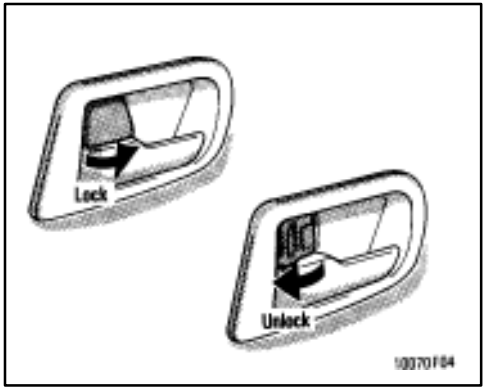

LOCKING WITH INSIDE LOCK KNOB

Turn the lock knob forward to lock and backward to unlock the door.

Closing the door with the lock knob in the lock position will also lock the door. Be careful not to lock your keys in the vehicle. The door cannot be locked if you leave the key in the ignition switch.

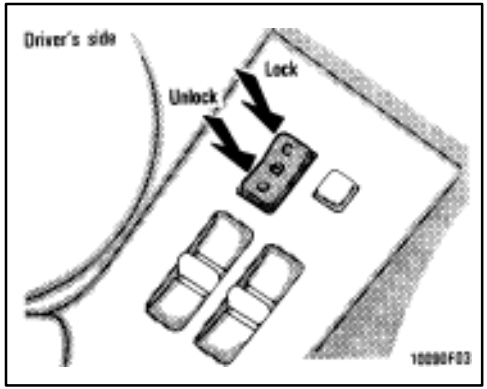

LOCKING WITH POWER DOOR LOCK SWITCH

To lock both of the doors simultaneously, push the power door lock switch on the LOCK side. Pushing on the UNLOCK side will unlock them.

Power windows

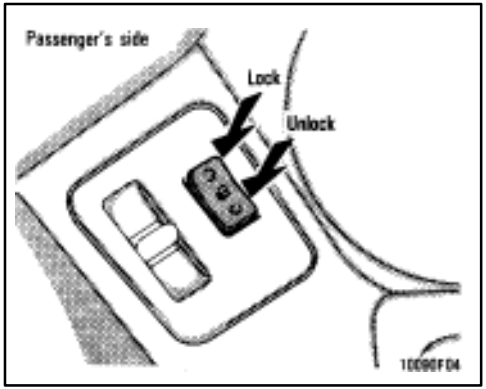

CAUTION

Before driving, be sure that the doors are closed and locked, especially when small children are in the vehicle. Along with the proper use of seat belts, locking the doors helps prevent the driver and passengers from being thrown out from the vehicle during an accident. It also helps prevent the doors from being opened unintentionally.

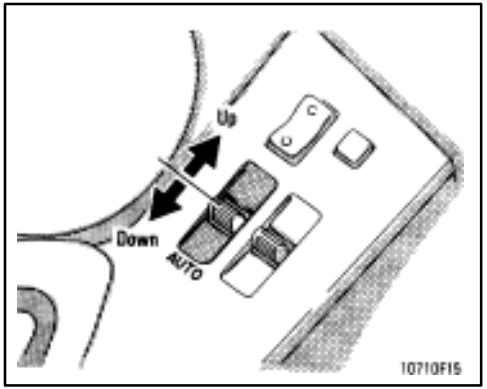

The windows can be operated with the switch on each side door.

The power windows work when the ignition switch is in the "'ON" position. However, if both side doors are closed, they work for 60 seconds even after the ignition-switchh is turned off. They stop working when either side door is opened.

OPERATING THE DRIVER'S WINDOW

Use the switch on the driver's door.

Normal operation: The window moves as long as you hold the switch.
To open: Lightly pull down the switch.

To close: Push up the switch.

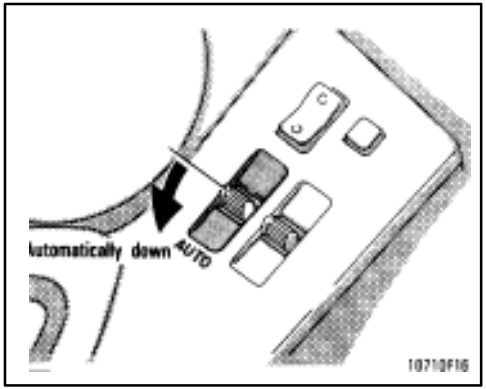

Automatic operation (to open only): Pull the switch completely down and then release it. The window will fully open.To stop the window partway, lightly push the switch up and then release it.

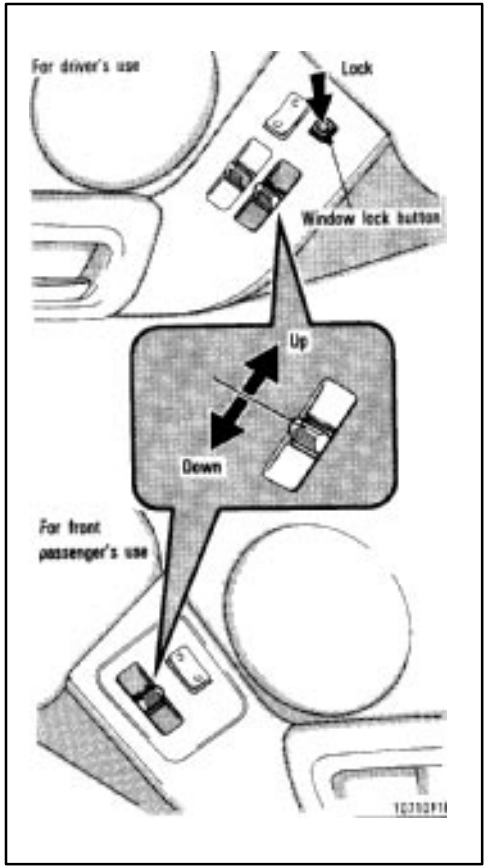

OPERATING THE PASSENGER'S WINDOW

Use the switch on the passenger's door. The driver's door also has a switch that controls the passenger's window.

The window moves as long as you hold the switch.

To open: Pull down the switch.

To close: Push up the switch.

If you push in the window lock button on the driver's door, the passenger's window cannot be operated.

⚠ CAUTION

To avoid serious personal injury, you must do the following.

- **Always make sure the head, hands and other parts of the body of all occupants are kept completely inside the vehicle before you close the power windows. If someone's neck, head or hands gets caught in a closing window, it could result in a serious injury. When anyone closes the power windows, be sure that they operate the windows safely.**
- **When small children are in the vehicle, never let them use the power window switches without supervision. Use the window lock button to prevent them from making unexpected use of the switches.**
- **Never leave small children alone in the vehicle, especially with the ignition key still inserted. They could use the power window switches and get trapped in a window. Unattended children can become involved in serious accidents.**

Back door––

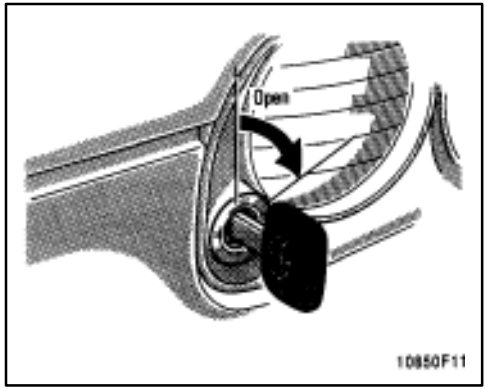

To open the back door from the outside, insert the key and turn it clockwise.

See "Luggage storage precautions"' in Part 2 for precautions to observe in loading luggage.

To close the back door, lower it and press down on it. After closing the back door, try pulling it up to make sure it is securly closed.

! CAUTION

Keep the back door closed while driving. This not only keeps the luggage from being thrown out but also prevents exhaust gases from entering the vehicle.

––Lock release lever

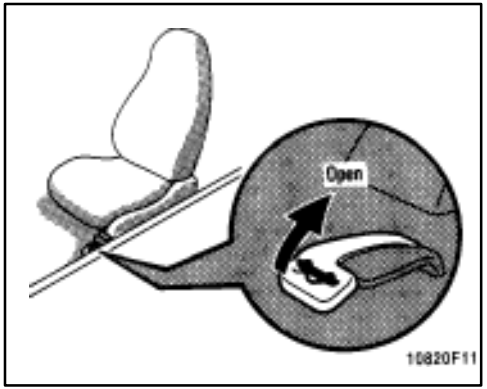

To open the back door from the driver's seat, pull up on the lock release lever.

Hood

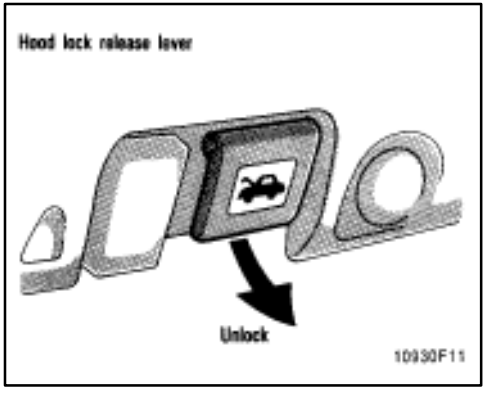

To open the hood, do the following.

1. **Pull the hood lock release lever. The hood will spring up slightly.**

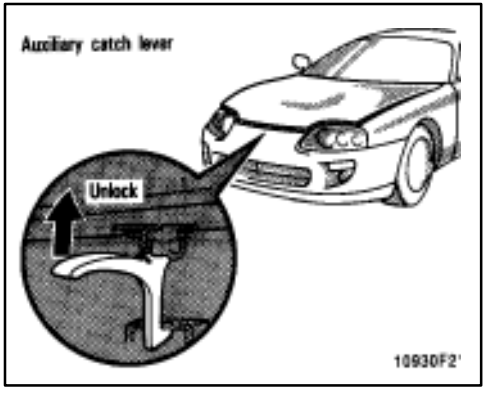

2. **In front of the vehicle, pull up on the auxiliary catch lever and lift the hood.**

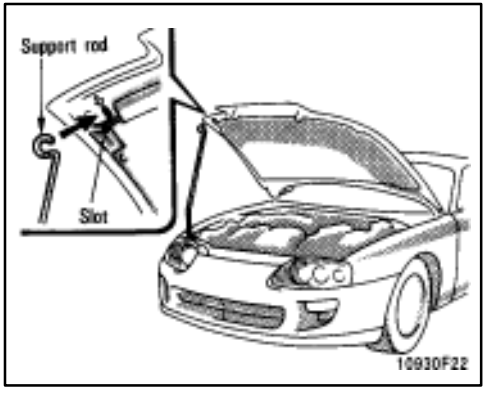

3. **Hold the hood open by inserting the support rod into the slot.**

Before closing the hood, check to see that you have not forgotten any tools, rags, etc. and return the support rod to its clip–this prevents rattles.

CAUTION

After inserting the rod, make sure it supports the hood security.

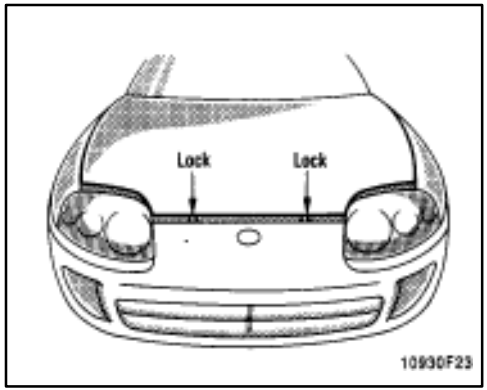

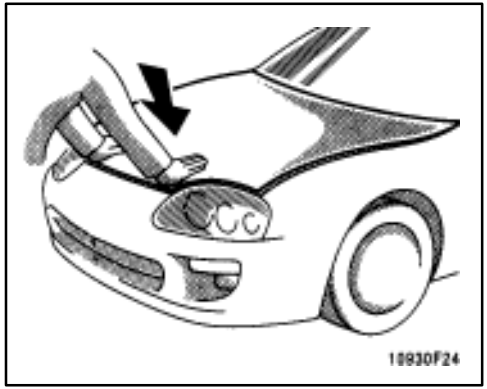

Your Supra has two hood locks at the front edge of the hood.

To close the hood, lower the hood until it is about 30 cm (12 in.) about the engine compartment and release it. if the hood is still not fully closed, press down on it above the two hood locks. Make sure the hood is locked securely.

If you notice while driving that the hood is not locked, stop the vehicle at once and close the hood.

! CAUTION

When closing the hood, be careful not to get your hands caught between the hood and the vehicle body.

NOTICE

Do not press hard on the hood except above the hood locks, or you may deform the hood.

Theft deterrent system



To deter the vehicle theft, the system is designed to give an alarm and keep the engine from being started if any of the side doors, back door or hood is forcibly unlocked or the battery terminal is disconnected and then reconnected when the vehicle is locked.

The alarm blows the horn intermittently and flashes the headlights, tail lights and other exterior lights. The engine cannot be started because the starter circuit will be cut.

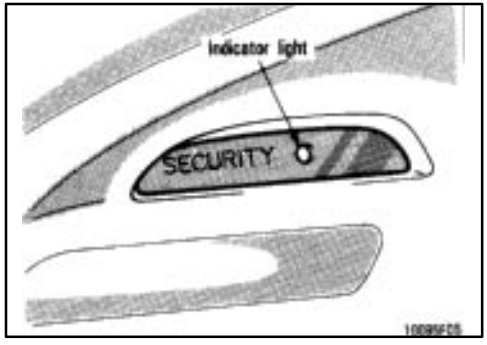

SETTING THE SYSTEM

1. Turn the ignition key to the “LOCK” position and remove it.
2. Have all passengers get out of the vehicle.
3. Close and lock all the side doors, back door and hood.

The indicator light will come on when all the sidedoors, back door and hood are closed and locked.

As the side doors are locked, the system, will give you a preparation time of 30 seconds before the setting, during which the side doors, back door and hood may be opened to prepare for the setting.

Be careful not to use the key when opening any side door. This will cancel the system.

4. After making sure the indicator light starts flashing, you may leave the vehicle.

The system will automatically be set after the preparation time passes. The indicator light will flash to show the system is set. If any of the side doors, back door or hood is open at that time, the setting is interrupted until it is closed and locked.

Never leave anyone in the vehicle when you set the system, because unlocking from the inside will activate the system.

WHEN THE SYSTEM IS SET

Activating the system

The system will give the alarm and cut the starter circuit under the following conditions:

® If any of the side doors, back door or hood is unlocked without using the key.

® If the battery terminal is disconnected and then reconnected

After one minute, the alarm will automatically stop with the starter cirucit cut kepton.

Reactivating the alarm

Once set, the system automatically resets the alarm each time all the side doors, back door and hood are closed after the alarm stops.

The alarm will be activated again under the following conditiions:

® If any of the side doors, back door or hood is opened

® If the battery terminal is disconnected and then reconnected

Stopping the alarm

Turn the ignition key from the “LOCK” to “ACC” position . The alarm will be stopped with the starter circuit cut kept on. Stopping the alarm in this manner will keep the alarm from being reactivated when any of theside doors, back door or hood is opened.

Interrupting the setting

When the system set, the back door can be opened by using the key without setting off the system. While the back door is open, the setting is interrupted and the side doors and hood may be opened in addition. However, when the battery terminal is disconnected and then reconnected, the system is activated.

Close and lock the side doors and hood, and the system will automatically be reset after two seconds when the back door is closed with the key removed.

CANCELLING THE SYSTEM

Unlock either side door with the key.

This cancels the system completely and the starter circuit cut will be cancelled at once.

INDICATOR LIGHT

The indicator light gives the following three indications.

FLASHING—The system is set. You need the key to open the side doors, back door and hood.

ON–The system will automatically be set when the time comes. The side doors, back door and hood may be opened without a key.

OFF—The system is inactive. You may open any door, trunk and hood.

TESTING THE SYSTEM

1. Open the windows
2. Set the system as described above. The side doors shoulkd be locked with the key. Be sure to wait until the indicator light starts flashing.
3. Unlock either side door from the in–side. The system should activate the alarm
4. Cancel the system by unlocking either side doors with the key.
5. Repeat this operation for the other side doors, back door and hood. When testing on the hood, also check that the system is activated when the battery terminal is disconnected and then reconnected.

If the system does not work properly, have it checked by your Toyota dealer.

Fuel tank cap

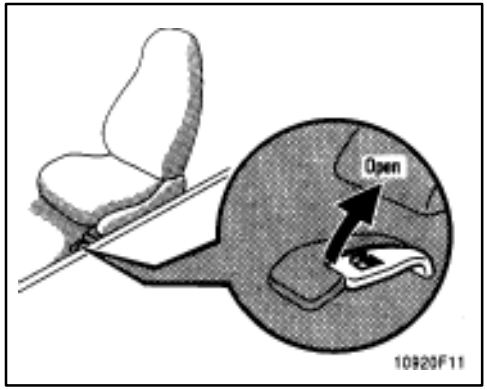

1. To open the fuel filler door, pull the lever up.

CAUTION

- **Do not smoke, cause sparks or allow open flames when refuelling. The fumes are flammable.**
- **When opening the cap, do not remove the cap quickly. In hot weather, fuel under pressure could cause injury by spraying out of the filler neck if the cap is suddenly removed.**

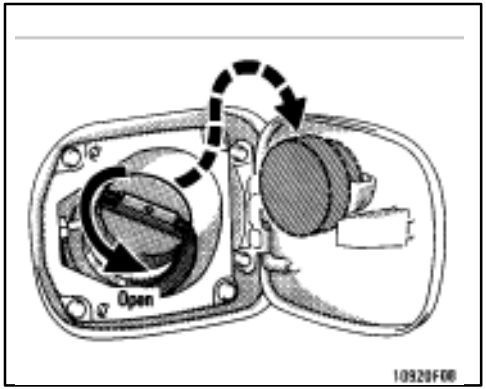

2. **To remove the fuel tank cap, turn the cap slowly counterclockwise, then pause slightly before removing it. After removing the cap, hang it on the cap hanger.**

It is not unusual to hear a slight swoosh when the cap is opened. When installing, turn the cap clockwise till you hear a click.

CAUTION

- **Make sure the cap is tightened securely to prevent fuel spillage in case of an accident.**
- **Use only a genuine Toyota fuel tank cap for replacement. It has a built in check valve to reduce fuel tank vacuum.**

Sport roof–– ––Detaching from vehicle

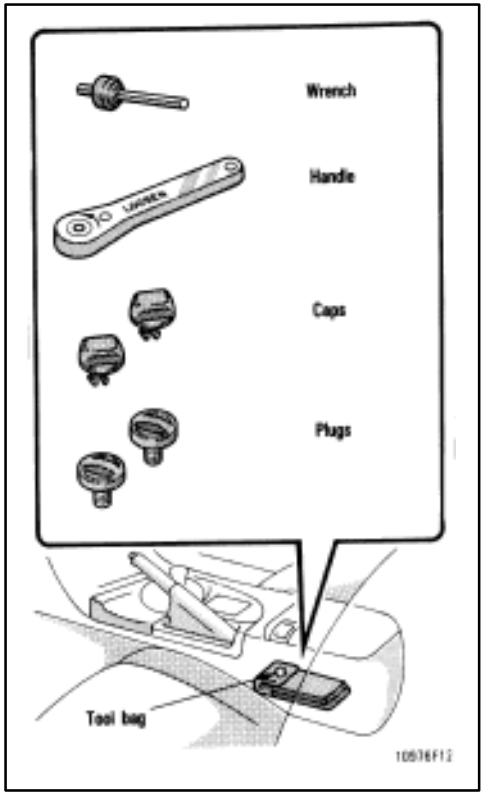

1. **Get the tool bag out of the console box.**

In the tool bag, you will find a special kit consisting of:

® Wrench and handle

—For turning the center lock and the front and rear bolts

® Caps

— For covering the front bolts

® Plugs

—For stopping up the rear holes

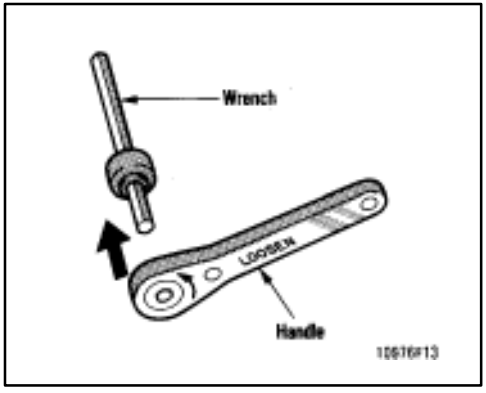

2. **Face the “LOOSEN” side of the handle toward you and insert the wrench into the handle**.

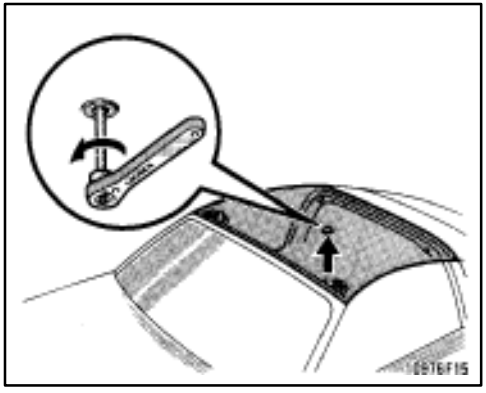

3. **Unlock the center lock by inserting the wrench and turning it a 1/4 turn counterclockwise.**

Before detaching the sport roof from the vehicle, fully open both of the side doors and windows, and clear the seats.

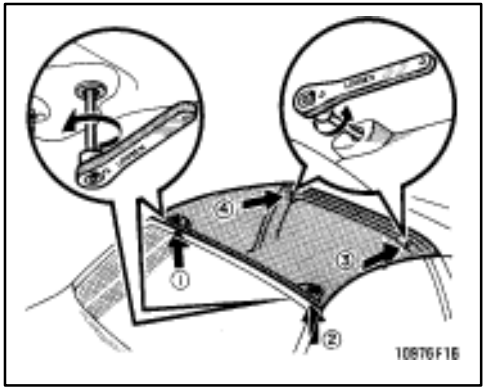

4. Loosen the bolts in the order shown by turning the wrench counterclockwise. Then lift up the front edge of the sport roof and lift off the roof forward.

⚠ CAUTION

Be careful not to get your hands or fingers caught between the sport roof and the vehicle body when detaching the roof.

NOTICE

Take care not to hit the sport roof against the vehicle body to avoid damage to the roof when detaching the roof.

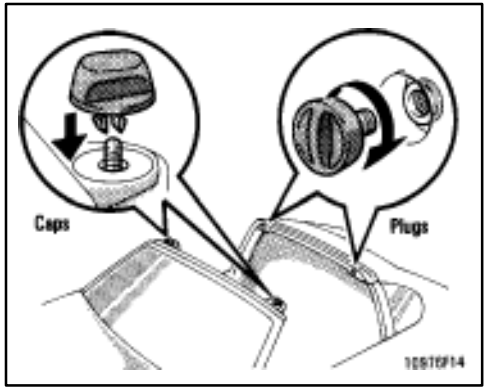

5. After removing the roof, put the caps on the front bolts and insert the plugs into the rear holes

⚠ CAUTION

- **Do not stick your head, arms or any objects out of the opening while the vehicle is moving.**
- **Never attempt to remove the roof while driving.**
- **Do not sit on top of the vehicle around the opening.**

––Stowing in luggage compartment

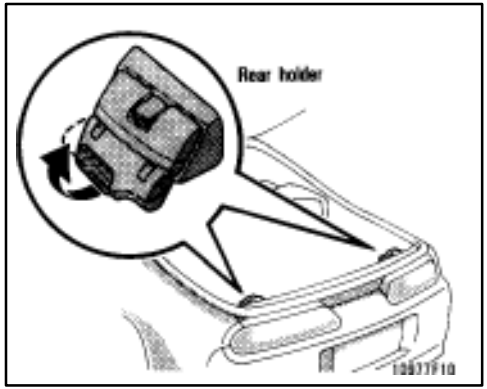

1. Open the back door and set up the rear holders as shown above.

Before stowing the roof in the luggage compartment, be sure to remove the luggage cover. (See “Luggage cover“ in Chapter 1–8.)

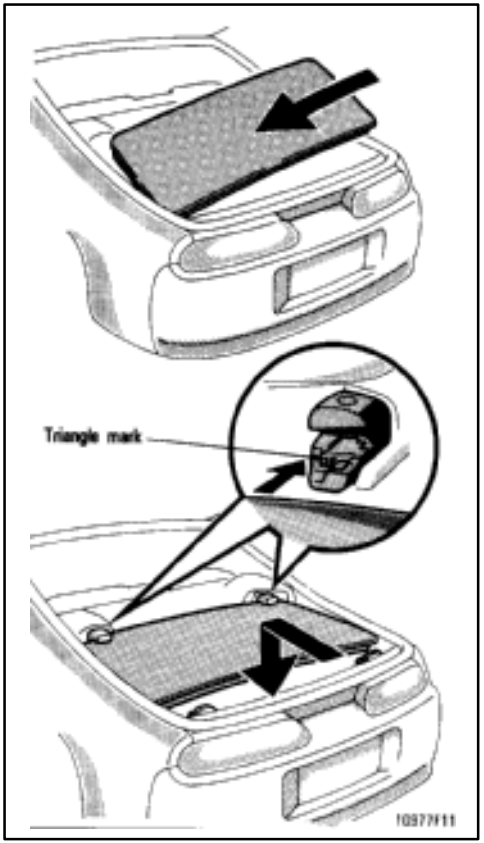

2. Put in the roof from the left side as shown. Then insert the front edge of the roof in the front holders, and engage the rear edge with the rear holders.

Put the front edge on the triangle marks of the front holders.

To engage the rear edge of the roof with the rear holders, put the rear edge on the holders while pushing the front edge fully forward against the front holders.

! CAUTION

To minimize the risk of personal injury, make sure all four corners of the roof are securely locked in the holders after installation.

NOTICE

To avoid damage the roof panel, do not press on the center of the stowed roof panel and do not put anything on the stowed roof panel.

––Reinstalling on vehicle

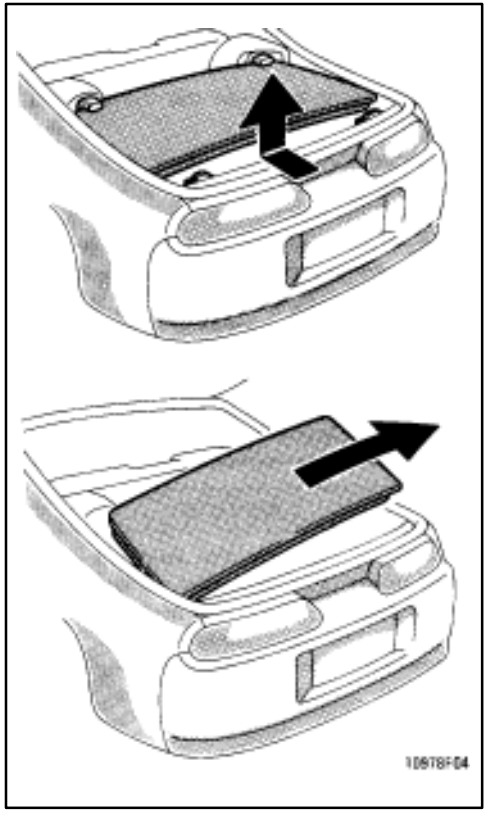

1. **Lift up the rear edge while pushing the roof fully fowward, then pull the front edge out of the holders. Remove the roof from the right side as shown.**

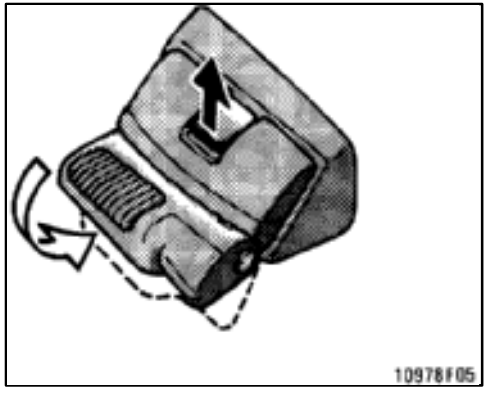

After removing the roof, put back the rear holders by pulling up the lock release knob.

NOTICE
Do not operate the knob until the roof has been removed.

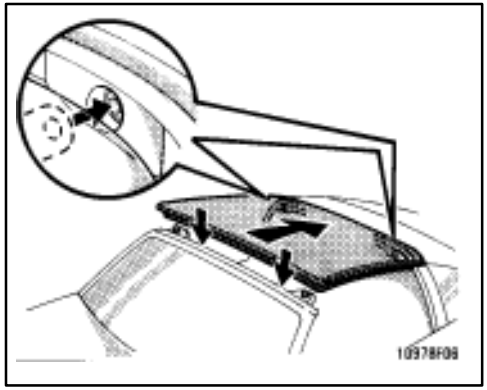

2. Place the rear edge on first and then the front edge.

Before installation, be sure to take the caps and plugs off.

! CAUTION

To minimize the risk of personal injury, make sure all four corners are securely fixed on the brackets after installation.

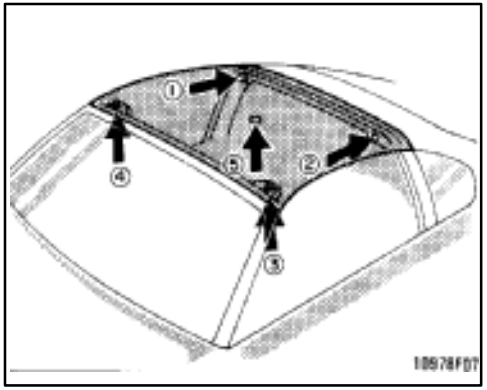

3. Tighten the bolts and lock the center lock in the order shown. (See "–Detaching from vehicle" for details.)

Note that all five connections need to be tight to secure the sport roof.

Reverse the wrench handle so the "TIGHTEN" side faces toward you and turn it clockwise.

Check that the roof is correctly installed by lightly trying to move the roof.

Put the wrench, handle, caps and plugs back in the tool bag in the console box.

! CAUTION

Make sure to tighten all four bolts and to lock the center lock when installing the sport roof.

Part 1

OPERATION OF INSTRUMENTS AND CONTROLS—

Chapter 1–3

Seats, Seat belts, Steering wheel and Mirrors

- Ⓡ Seats
- Ⓡ Front seats
- Ⓡ Fold–down rear seat
- Ⓡ Seat heaters
- Ⓡ Seat belts
- Ⓡ SRS airbags
- Ⓡ Child restraint
- Ⓡ Tilt steering wheel
- Ⓡ Outside rear view mirrors
- Ⓡ Anti–glare inside rear view mirror

Seats

While the vehicle is being driven, all vehicle occupants should have the seatback upright, sit well back in the seat and properly wear the seat belt provided.

⚠ CAUTION

ⓇDo not drive with the occupants not properly seated such as sitting on top of a folded–down seatback, or in the luggage compartment. Persons not properly seated and not properly restrained by seat belts can be severely injured in the event of emergency braking or a collision.

ⓇDuring driving, do not allow passengers to stand up or move around between seats. Severe injuries can occur in the event of emergency braking or a collision.

Front seats—

—Seat adjustment precautions

Adjust the driver's seat so that the foot pedals, steering wheel and instrument panel controls are within easy reach of the driver.

⚠ CAUTION

ⓇAdjustments should not be made while the vehicle is moving, as the seat may unexpectedly move and cause the driver to lose control of the vehicle.

ⓇWhen adjusting the seat, be careful not to hit the seat against a passenger, luggage or rear seat.

ⓇAfter adjusting the seat position, try sliding it forward and backward to make sure it is locked in position.

ⓇAfter adjusting the seatback, exert body pressure to make sure it is locked in position.

ⓇDo not put objects under the seats as they may interfere with the seat-lock mechanism or unexpectedly push up the seat position adjusting lever; the seat may suddenly move, causing the driver to lose control of the vehicle.

—Adjusting front seats (manual seat)

®While adjusting the seat, do not put your hands under the seat or near the moving parts. You may catch and injure your hands or fingers.



ADJUSTING SEAT POSITION

Pull the lock release lever up. Then slide the seat to the desired position with slight body pressure and release lever.

ADJUSTING SEATBACK ANGLE

Lean forward and pull thelock release lever. Then lean back to the desired angle and release the lever.

! CAUTION

To reduce the risk os sliding under the lap belt during a collision, avoid reclining the seatback any more than needed. The seat belts provide maximum protection when the driver and the passenger are sitting up straight and well back in the seats. If you are reclined, the lap belt may slide past your hips and apply restraint forces directly to the abdomen. Therefore, in the event of a frontal collision, the risk of personal injury may increase with increasing recline of the seatback.

—Adjusting front seats (power seat)

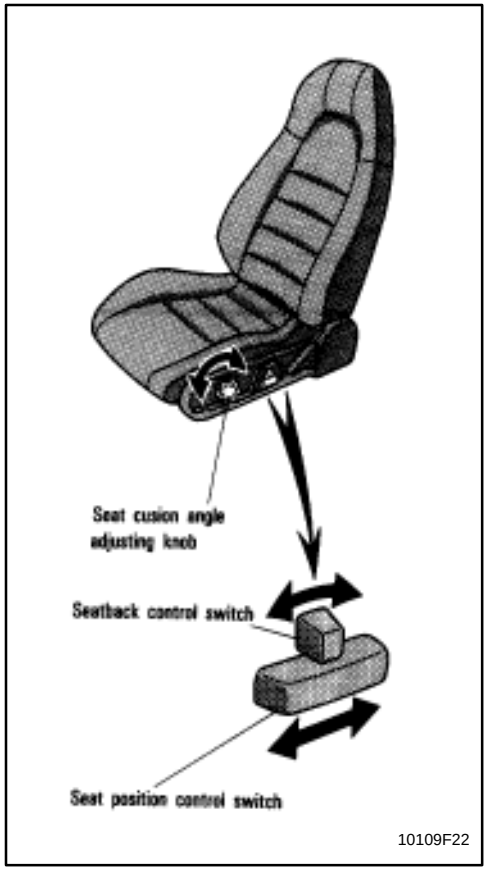

ADJUSTING SEAT POSITION

Move the control switch to the desired direction.

Releasing the switch will stop the seat at that position.

Do not place anything under the front seats. It might interfere with the seat movement.

ADJUSTING SEATBACK ANGLE

Move the control switch in the desirted direction.

Releasing the switch will stop the move in that position.

CAUTION

To reduce the risk of sliding under the lap belt during a collision, avoid reclining the seatback any more than needed. The seat belts provide maximum protection when the driver and the passenger are sitting up straight and well back in the seats. If you are reclined, the lap belt may slide past your hips and apply restraint forces directly to the abdomen. Therefore, in the event of a formal collision, the risk of personal injury may increase with increasing recline of the seatback.

ADJUSTING SEAT CUSHION ANGLE

Turn the knob either way.

—Tilting driver's seatback for rear seat entry

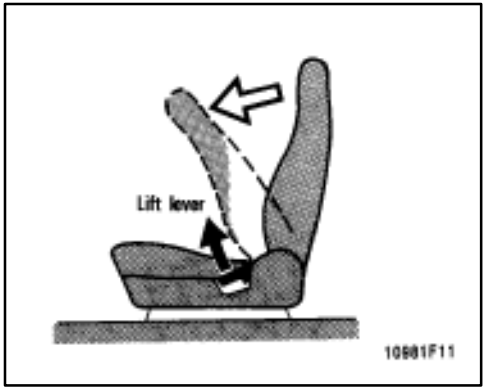

Lift seatback lock release lever—the seatback will tilt forward.

This allows passengers to get into or out of the rear seat easily. After passengers are in lift up on the seatback.

! CAUTION

After putting back the seatback, try pushing the seatback forward and rearward to make sure it is secured in place.

—Moving passenger's seat for rear seat entry

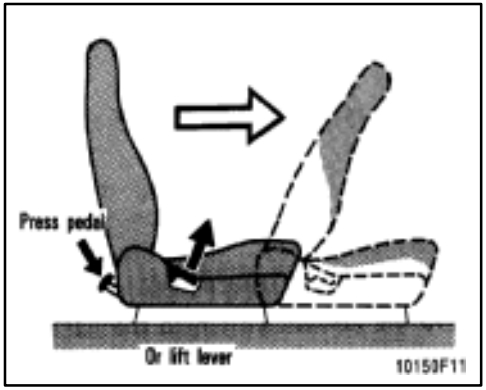

For easy access to the rear seat, do this.

1. Lift the seatback lock release lever or press the release pedal.

The seat will slide forward slightly.

2. Move the seat to the front–most position.

After passengers are in, lift up the seatback and return the seat until it locks.

! CAUTION

®After putting back the seat, try pushing the seat forward and rearward to make sure it is secured in place.

®Never allow anyone to rest their foot on the release pedal while the vehicle is moving.

Fold–down rear seat

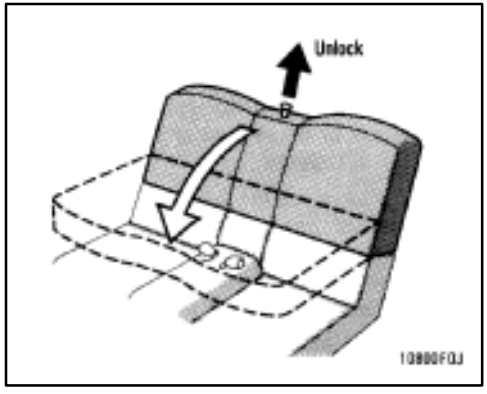

FOLDING DOWN REAR SEAT

Unlock the seatback, and fold it down.

This will enlarge the luggage compartment as far as the front seatbacks. See “Luggage stowage precautions” in Part 2 for precautions to observe in loading luggage.

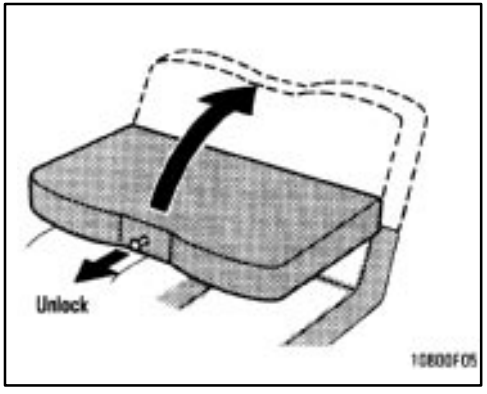

SETTING UP REAR SEAT

Unlock the seatback, and set it up.

CAUTION

When returning the seatback to the upright position:

- **Make sure the seat belts are not twisted or caught in the seatback and are arranged in their proper position for ready to use.**
- **Make sure the seatback is securely locked by pushing forward and rearward on the top of the seatback.**

Seat heaters

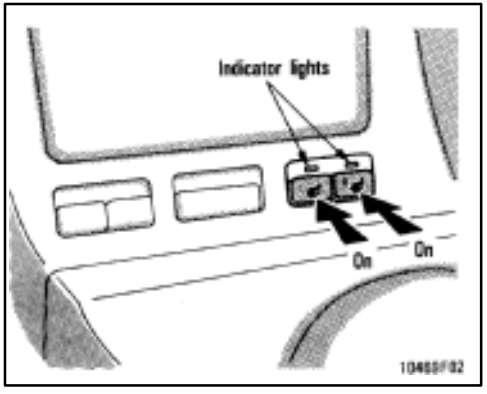

To turn on the seat heater, push the “L” switch for the driver’s seat, and “R” switch for the passenger’s seat.

The key must be in the “ON” position.

Once the seat is warmed up, the heat of the seat heater is reduced automatically. The indicator light above the switch illuminates when the seat heater is operating.

CAUTION

Use control for persons who are mentioned below in the use of the seat heater because it may make them feel too hot or cause burns at low temperatures (erythema, varicella).

- **Baby, small child, elderly person, sick person or handicapped person**
- **Persons who have delicate skin**
- **Persons who are exhausted**
- **Drunk person or those who have taken drugs which induce sleep (sleeping drug, cold remedy, etc.)**

To prevent the seat overheating, do not use the seat heater with a blanket, cushion, or other insulating objects which cover the seat.

NOTICE

- ***Do not put unevenly weighed objects on the seat and do not stick sharp objects (needles, nails, etc.) on the seat.***
- ***When cleaning the seats, do not use organic substances (paint thinner, benzine, alcohol, gasoline, etc.). They may damage the heater and seat surface.***
- ***To prevent the battery from being discharge, turn the switch on when the engine is running.***

Seat belts—
—Seat belt precautions

Toyota strongly urges that the driver and passengers in the vehicle be properly restrained at all times with the seat belts provided. Failure to do so could increase the chance of injury and/or the severity of injury in accidents.

Child. Use a child restraint system appropriate for the child until the child becomes large enough to properly wear the vehicle's seat belts. See "Child restraint" for details.

If a child is too large for a child restraint system, the child should sit in the rear seat and must be restrained using the vehicle's seat belt. According to accident statistics, the child is safer when properly restrained in the rear seat than in the front seat.

If a child must sit in the front seat, the seat belts should be worn properly. If an accident occurs and the seat belts are not worn properly, the force of the rapid inflation of the airbag may cause serious injury to the child.

Do not allow the child to stand up or kneel on either rear or front seats. An unrestrained child could suffer serious injury during emergency braking or a collision. Also, do not let the child sit on your lap. It does not provide sufficient restraint.

CAUTION

Use control for persons who are mentioned below in the use of the seat heater because it may make them feel too hot or cause burns at low temperatures (erythema, varicella).

- **Baby, small child, elderly person, sick person or handicapped person**
- **Persons who have delicate skin**
- **Persons who are exhausted**
- **Drunk person or those who have taken drugs which induce sleep (sleeping drug, cold remedy, etc.)**

To prevent the seat overheating, do not use the seat heater with a blanket, cushion, or other insulating objects which cover the seat.

NOTICE

- ***Do not put unevenly weighed objects on the seat and do not stick sharp objects (needles, nails, etc.) on the seat.***
- ***When cleaning the seats, do not use organic substances (paint thinner, benzine, alcohol, gasoline, etc.). They may damage the heater and seat surface.***
- ***To prevent the battery from being discharge, turn the switch on when the engine is running.***

Seat belts—
—Seat belt precautions

Toyota strongly urges that the driver and passengers in the vehicle be properly restrained at all times with the seat belts provided. Failure to do so could increase the chance of injury and/or the severity of injury in accidents.

Child. Use a child restraint system appropriate for the child until the child becomes large enough to properly wear the vehicle's seat belts. See "Child restraint" for details.

If a child is too large for a child restraint system, the child should sit in the rear seat and must be restrained using the vehicle's seat belt. According to accident statistics, the child is safer when properly restrained in the rear seat than in the front seat.

If a child must sit in the front seat, the seat belts should be worn properly. If an accident occurs and the seat belts are not worn properly, the force of the rapid inflation of the airbag may cause serious injury to the child.

Do not allow the child to stand up or kneel on either rear or front seats. An unrestrained child could suffer serious injury during emergency braking or a collision. Also, do not let the child sit on your lap. It does not provide sufficient restraint.

If the shoulder belt falls across the child's neck or face, have the child sit slightly closer to the buckle side to the seat so that the belt lays across the shoulder.

Pregnant woman. Toyota recommends the use of a seat belt. Ask your doctor for specific recommendations. The lap belt should be worn securely and as low as possible over the hips and not on the waist.

Injured person. Toyota recommends the use of a seat belt. Depending on the injury, first check with your doctor for specific recommendations.

⚠ CAUTION

Persons should ride in their seats properly wearing their seat belts whenever the vehicle is moving. Otherwise, they are much more likely to suffer serious bodily injury in the event of sudden braking or a collision.

When using the seat belts, observe the following:

- **Ⓡ Use the belt for only one person at a time. Do not use a single belt for two or more people—even children.**
- **Ⓡ Avoid reclining the seatbacks too much. The seat belts provide maximum protection when the seatbacks are in the upright position. (See the seat adjustment instructions.)**
- **Ⓡ Be careful not to damage the belt webbing or hardware. Take care that they do not get caught or pinched in the seat or doors.**
- **Ⓡ Inspect the belt system periodically. Check for cuts, fraying, and loose parts. Damaged parts should be replaced. Do not disassemble or modify the system**
- **Ⓡ Keep the belts clean and dry. If they need cleaning, use a mild soap solution or lukewarm water. Never use bleach, dye, or abrasive cleaners—they may severely weaken the belts.**
- **Ⓡ Replace the belt assembly (including bolts) If it has been used in a severe impact. The entire assembly should be replaced even if damage is not obvious.**

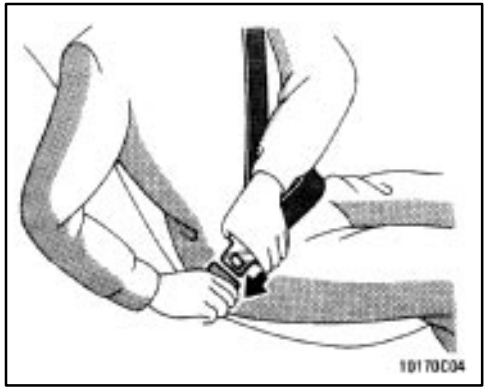

Adjust the seat as needed (front seats only) and sit up straight and well back int eh seat. To fasten your belt, pull it out of the retractor and insert the tab into the buckle.

You will hear a click when the tab locks into the buckle.

The seat belt length automatically adjusts to you size and the seat position.

The retractor will lock the belt during a sudden stop or on impact. It also may lock if you lean forward too quickly. A slow, easy motion will allow the belt to extend, and you can move around freely.

If the seat belt cannot be pulled out of the retractor, firmly pull the belt and release it. You will then be able to smoothly pull the belt out of the retractor.

When a passenger's shoulder belt is completely extended and is then retracted even slightly, the belt is locked in that position and cannot be extended. This feature is used to hold the child restraint system securely. (For details, see "Child restraint" in this chapter.) To free the belt again, fully retract the belt and then pull the belt out once more.

! CAUTION

®After inserting the tab, make sure the tab and buckle are locked and that the belt is not twisted.

®Do not insert coins, clips, etc. in the buckle as this may prevent you from properly latching the tab and buckle.

®If the seat belt does not function normally, immediately contact your Toyota dealer.

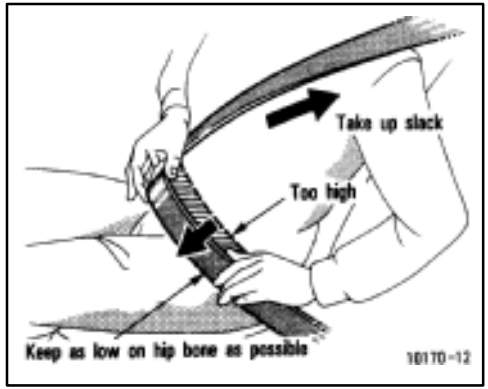

Adjust the position of the lap and shoulder belts

Position the lap belt as low as possible on your hips—not your waist, then adjust it to a snug fit by pulling the shoulder portion upward through the latch plate.

! CAUTION

®High–positioned lap belts and loose–fitting belts both could increase the chance of injury due to sliding under the lap belt during an accident or other unintended result. Keep the lap belts as low on your hip bone as possible.

®For your safety, do not place the shoulder belt under your arm.

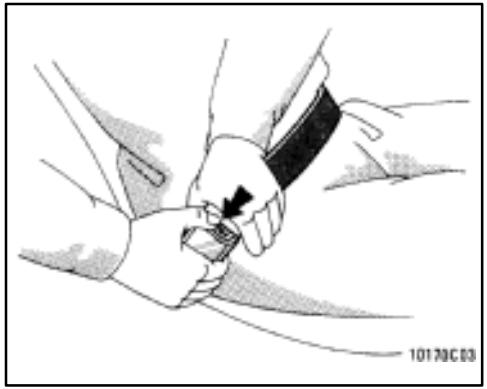

To release the belt, press the buckle–release button and allow the belt to retract.

If the belt does not retract smoothly, pull it out and check for kinks or twists. Then make sure it remains untwisted as it retracts.

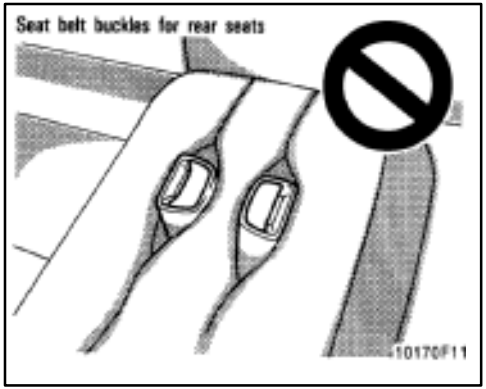

⚠ CAUTION

For your safety, do not use the rear seat belts with the buckle in the rear seats.

—Seat belt extender

If your seat belt cannot be fastened securely because it is not long enough, a personalized seatbelt extender is available from your Toyota dealer free of charge.

Please contact your local Toyota dealer so that the dealer can order the proper required length for the extender. Bring the heaviest coat you expect to wear for proper measurement and selection of length. Additional ordering information is available at your Toyota dealer.

⚠ CAUTION

When using the seat belt extender, observe the following. Failure to follow these instructions could result in less effectiveness of the seat belt restraint system in case of vehicle accident, increasing the chance of personal injury.

®Never use the seat belt extender if you can fasten the seat belt without it.

®**Remember that the extender provided for your may not be safe when used on a different vehicle, or for another person or at a different seating position than the one originally intended for.**

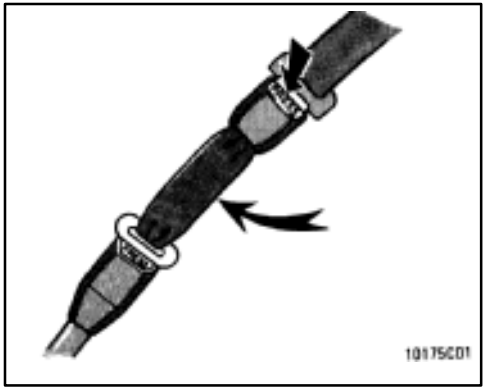

To connect the extender to the seat belt, insert the tab into the seat belt buckle so that the "PRESS" signs on the buckle–release buttons of the extender and the seat belt are both facing outward as shown.

You will hear a click when the tab locks into the buckle.

When releasing the seat belt, press on the buckle–release button on the extender, not on the seat belt. This helps prevent damage to the vehicle interior and extender itself.

When not in use, remove the extender and store in the vehicle for future use.

! CAUTION

®**After inserting the tab, make sure the tab and buckle are locked and that the seat belt extender is not twisted.**

®**Do not insert coins, clips, etc. in the buckle as this may prevent you from properly latching the tab and buckle.**

®**If the seat belt does not function normally, immediately contact your Toyota dealer.**

SRS airbags

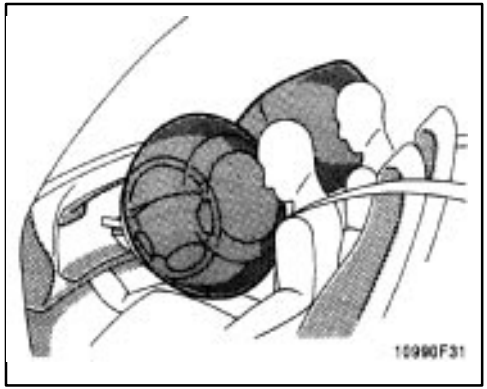

The SRS (Supplemental Restraint System) airbags are designed to provide further protection to the driver and front passenger when added to the primary protection provided by the seat belts.

In response to a severe frontal impact, the SRS airbags work together with the seat belts to help preventing or reduce injury by inflating, in order to decrease the likelihood of the driver's or front passenger's head or chest directly hitting the steering wheel or dashboard. The passenger airbag is activated even with no passenger in the front seat.

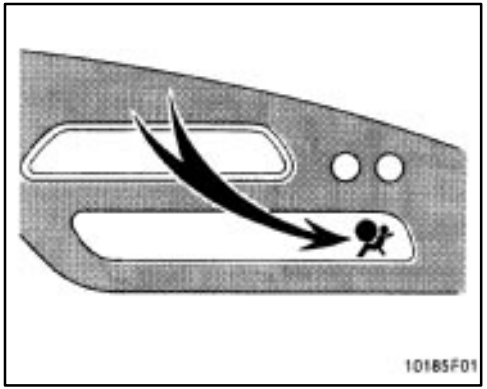

This indicator comes on when the ignition key is turned to the "ACC" or "ON" position. It goes off after about 6 seconds. This means the SRS airbags are operating properly.

The SRS airbag warning light system monitors the airbag sensor assembly, inflators, warning light, interconnecting wiring and power sources.

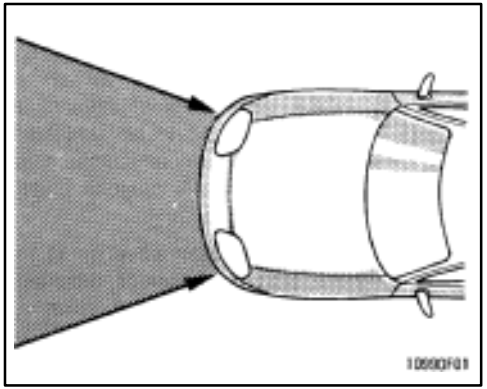

The SRS airbag system is designed to activate in response to a severe frontal impact within the shaded area between the arrows in the illustration.

The SRS airbags will deploy if the severity of the impact is above the designed threshold level, comparable to an approximate 20 km/h (14 mph) collision when impacting straight into a fixed barrier that does not move or deform.

If the severity of the impact is below the above threshold level, the SRS airbags may not deploy.

However, this threshold velocity will be considerably higher if the vehicle strikes an object, such as a parked vehicle or sign pole, which can move or deform on impact, or if it is involved in an underride collision (e.g. a collision in which the nose of the vehicle “underrides”, or goes under, the bed of a truck.

It is possible with collision severity at the marginal level of airbag sensor detection and activation that only one of your vehicle’s two airbags will deploy.

For the safety of all occupants, be sure to always wear seat belts.

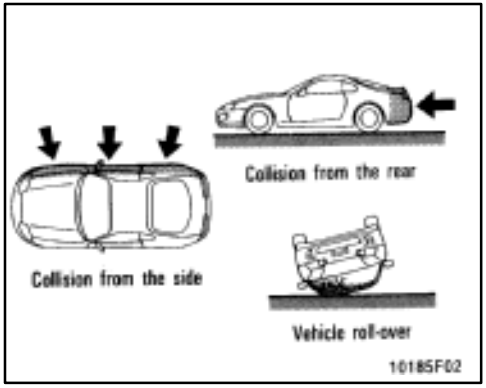

The SRS airbags are not designed to inflate if the vehicle is subjected to a side or rear impact, if it rolls over, or if it is involved in a low–speed frontal collision.

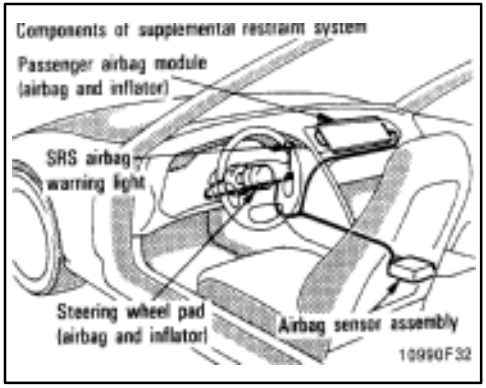

The airbag sensor assembly consists of a safing sensor and airbag sensor.

In a severe frontal impact, sensors detect deceleration and the system triggers the airbag inflators. Then a chemical reaction in the inflators momentarily fills the airbags with non–toxic nitrogen gas to help restrain the forward motion of the occupants.

When the airbags inflate, they produce a fairly loud noise and release some smoke along with the nitrogen or argon gas. This is not harmful and does not indicate a fire. Be sure to wash off any residue as soon as possible to prevent minor skin irritation.

Deployment of the airbags happen in a fraction of a second, so the airbags must inflate with considerable force. While the system is designed to reduce serious injuries, it may also cause minor burns or abrasions and swellings.

Parts of the airbag module (steering wheel hub, dashboard) may be hot for several minutes, but the airbags themselves will not be hot. The airbags are designed to inflate only once.

A crash severe enough to inflate the airbags may break the windshield as the vehicle buckles. In vehicles with a passenger airbag the windshield may also be damaged by absorbing some of the force of the inflating airbag.

! CAUTION

®The SRS airbag system is designed only as a supplement to the primary protection of the driver side and front passenger side seat belt systems. The front seat occupants are particularly susceptible to injury if they do not wear their seat belts; when sudden braking or a collision occurs, they may be thrown forward. To obtain maximum protection in an accident, the driver and all passengers in the vehicle should always wear their seat belts when driving because serious injuries can result to unrestrained occupants. For instructions and precautions concerning the seat belt systems, see "Seat belts" in this chapter.

®A baby or small child who is too small to use a seat belt should be properly secured in a rear seat using a child restraint system.



®Never put a rear–facing child restraint system in the front seat because the force of the rapid inflation of the passenger airbag can cause severe injury to the child. Vehicles with a passenger airbag display a caution label on the passenger side instrument panel as shown above to remind you not to install a rear–facing child restraint system on the front seat.

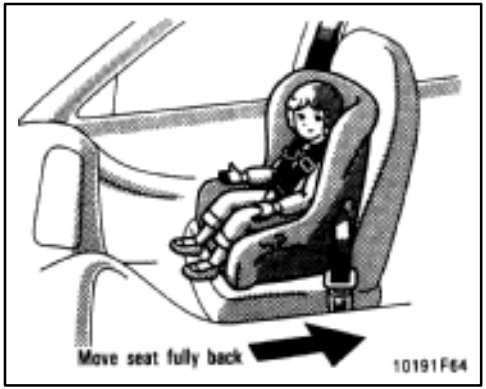

®If you must use a forward–facing child restraint system in the front seat, the seat must be moved as far back as possible. For instructions concerning the installation of a child restraint system, see “Child restraint” in this chapter.

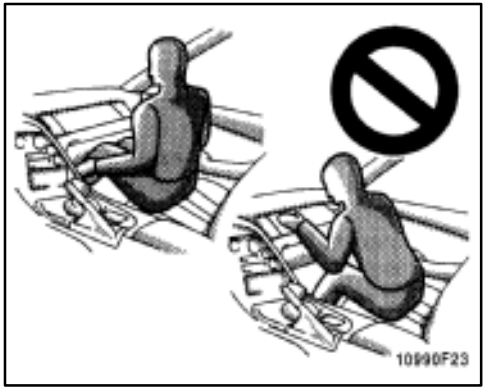

®Do not sit on the edge of the seat or lean over the dashboard when the vehicle is in use. The airbags inflate with considerable speed and force; you may be severely injured. Sit up straight and well back in the seat, and always use your seat belt.



®Do not allow a child to stand up, or to kneel on the front passenger seat. The airbag inflates with considerable speed and force; the child may be severely injured.

®Do not hold a child on your lap or in your arms. Use a child restraint system in the rear seat. For instructions concerning the installation of a child restraint system, see “Child restraint” in this chapter.

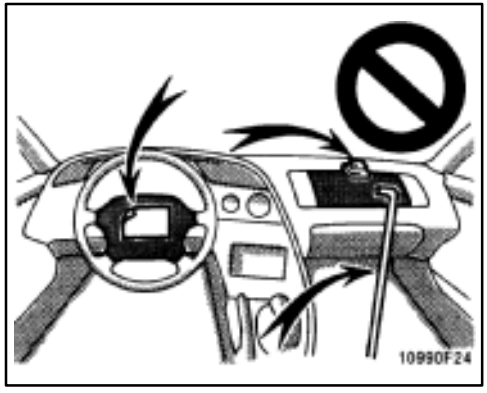

®Do not put objects on or in front of the dashboard or steering wheel pad that houses the airbag system. They might restrict inflation or cause pesonal injury as they are projected rearward.

®Do not modify, remove or open any components or wiring, such as the steering wheel column cover, front passenger airbag cover, front passenger airbag, airbag sensor assembly. Doing any of these may cause sudden SRS airbag inflation or disable the system, which could result in personal injury.

Failure to follow these instructions can result in death or serious injuries.

NOTICE

Do not perform any of the following changes without consulting your Toyota dealer. Such changes can interfere with proper operation of the SRS airbag system in some cases.

- ***Installation of electronic items such as a mobile two–way radio, cassette tape player or compact disc player***
- ***Modification of the suspension system***
- ***Modification of the front end structure***
- ***Attachment of a grille guard (bull bar, kangaroo bar, etc.), snowplow, winches or any other equipment to the front end***
- ***Repairs made on or near the front end structure, console, steering column, steering wheel or dashboard near the front passenger airbag***

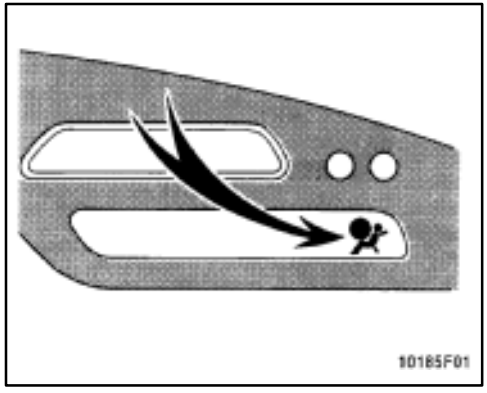

This SRS airbag system has a service reminder indicator to inform the driver of operating problems. If either of the following conditions occurs, this indicates a malfunction of the airbags. Contact your Toyota dealer as soon as possible to service the vehicle.

® The light does not come on when the ignition key is turned to the “ACC” or “ON” position, or remains on.

® The light comes on while driving.

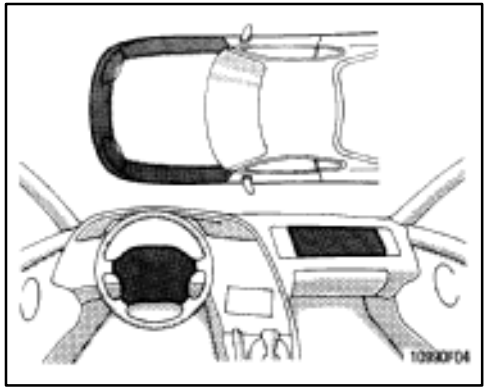

In the following cases, contact your Toyota dealer as soon as possible:

- ® The SRS airbags have been inflated.
- ® The front part of the vehicle (shaded in the illustration) was involved in an accident not of the extent to cause the SRS airbags to inflate
- ® The pad section of the steering wheel or front passenger airbag cover (shaded in the illustration) is scratched, cracked, or otherwise damaged.

Child restraint— —Child restraint precautions

Toyota strongly urges the use of child restraint systems for children small enough to use them.

The laws of all fifty states in the U.S.A. and Canada now require the use of a child restraint system.

Your vehicle conforms to SAEJ1819.

If a child is too large for a child restraint system, the child should sit in the rear seat and must be restrained using the vehicle's seat belt. See "Seat belts" for details.

! CAUTION

®For effective protection in automobile accidents and sudden stops, children must be properly restrained using a seat belt or child restraint system depending on the age and size of the child. Holding a child in your arms is not a substitute for a child restraint system. In an accident, the child can be crushed against the windshield, or between you and the vehicle's interior.

®Toyota strongly urges use of a proper child restraint system which conforms to the size of the child and is put on the rear seat. According to accident statistics, the child is safer when properly restrained in the rear seat than in the front seat.

®Never install a rear–facing child restraint system on the front seat. In the event of an accident, the force of the rapid inflation of the airbag can cause severe if a rear–facing child restraint system is put on the front seat.

®Unless it is unavoidable, do not put a forward–facing child restraint system on the front seat.

®If you must install a forward–facing child restraint system on the front seat, move the seat as far back as possible.

®Make sure that you have complied with all installation instructions provided by the child restraint manufacturer and that the system is properly secured.

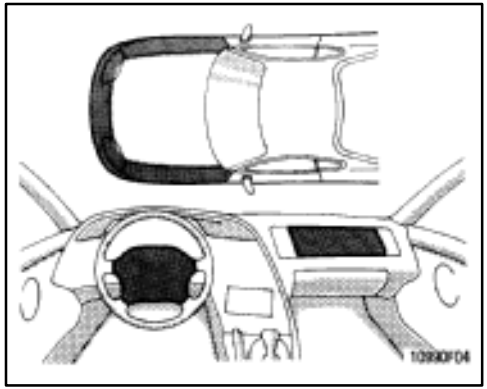

In the following cases, contact your Toyota dealer as soon as possible:

- ® The SRS airbags have been inflated.
- ® The front part of the vehicle (shaded in the illustration) was involved in an accident not of the extent to cause the SRS airbags to inflate
- ® The pad section of the steering wheel or front passenger airbag cover (shaded in the illustration) is scratched, cracked, or otherwise damaged.

Child restraint—
—Child restraint precautions

Toyota strongly urges the use of child restraint systems for children small enough to use them.

The laws of all fifty states in the U.S.A. and Canada now require the use of a child restraint system.

Your vehicle conforms to SAEJ1819.

If a child is too large for a child restraint system, the child should sit in the rear seat and must be restrained using the vehicle's seat belt. See "Seat belts" for details.

! CAUTION

®For effective protection in automobile accidents and sudden stops, children must be properly restrained using a seat belt or child restraint system depending on the age and size of the child. Holding a child in your arms is not a substitute for a child restraint system. In an accident, the child can be crushed against the windshield, or between you and the vehicle's interior.

®Toyota strongly urges use of a proper child restraint system which conforms to the size of the child and is put on the rear seat. According to accident statistics, the child is safer when properly restrained in the rear seat than in the front seat.

®Never install a rear–facing child restraint system on the front seat. In the event of an accident, the force of the rapid inflation of the airbag can cause severe if a rear–facing child restraint system is put on the front seat.

®Unless it is unavoidable, do not put a forward–facing child restraint system on the front seat.

®If you must install a forward–facing child restraint system on the front seat, move the seat as far back as possible.

®Make sure that you have complied with all installation instructions provided by the child restraint manufacturer and that the system is properly secured.

—Child restraint system

A child restraint system for a small child or baby must itself be properly restrained on the seat with either the lap belt or the lap portion of the lap/shoulder belt. You must carefully consult the manufacturer's instructions which accompany your child restraint system.

To provide proper restraint, use a child restraint system following the manufacturer's instructions about the appropriate age and size of the child for the child restraint system.

Install the child restraint system correctly following the instructions provided by its manufacturer of the system.

Toyota recommends installing the child restraint system on the rear seat. According to accident statistics, the child is safer when properly restrained in the rear seat than in the front seat.

CAUTION

- **Never install a rear–facing child restraint system on the front seat. In the event of an accident, the force of the rapid inflation of the airbag can cause death or serious injury if a rear–facing child restraint system is installed on the front seat.**
- **Unless it is unavoidable, do not install a forward–facing child restraint system on the front seat.**
- **If you must install a forward–facing child restraint system on the front seat, move the seat as far back as possible.**
- **After installing the child restraint system, make sure it is secured in place following the manufacturer's instructions. If it is not restrained securely, it may cause injury to the child in the event of a sudden stop or accident.**

When not using the child restraint system, keep it secured with the seat belt. This will prevent it injuring passengers in the event of a sudden stop or accident.

Your vehicle has anchors for securing the top strap of a child restraint system. The anchor nuts are welded beneath the sheet metal to permit installation of an anchor bracket for a child restraint system.

To install an anchor bracket, use an 8 mm X 30 mm X 1.25 mm coarse thread metric bolt and 15mm (0.6 in.) spacer. Note that the bolts accompanying many child restraint systems are not metric. You can damage the anchor nuts on our vehicle if you force bolts with different thread into the anchor nuts.

For instructions about how to install the anchor bracket, see "Top strap anchors and locations."

If your child restraint system does not provide any of the necessary parts, you can purchase the following items from your Toyota dealer.

* CRS installation kit
  (Part No. 04731–22012)—contains 1 bolt, 3 types of spacers and 1 locking clip.
* Bolt (Part No. 91511–60830)

—Types of child restraint system

Child restraint systems are classified into the following 3 types depending on the child's age and size.

(A) Infant seat

(B) Convertible seat

(C) Booster seat

Install the child restraint system following the instructions provided by its manufacturer.

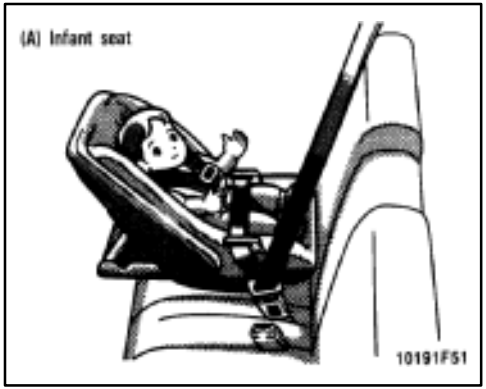



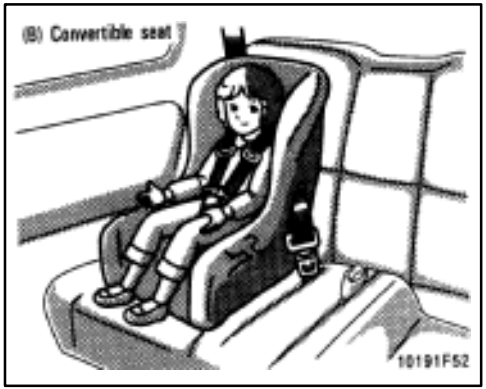

—Installation with 3–point type seat belt

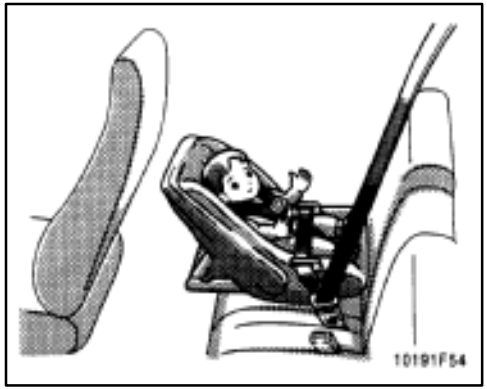

(A)INFANT SEAT INSTALLATION

An Infant seat is used in rear–facing only.



! CAUTION

®Never use rear–facing child restraint system in the front seat because the force of the rapid inflation of the passenger airbag can cause severe injury to the child. Vehicle with a passenger airbag display a caution label on the passenger side instrument panel as shown above to remind you not to install a rear–facing child restraint system on the front seat.

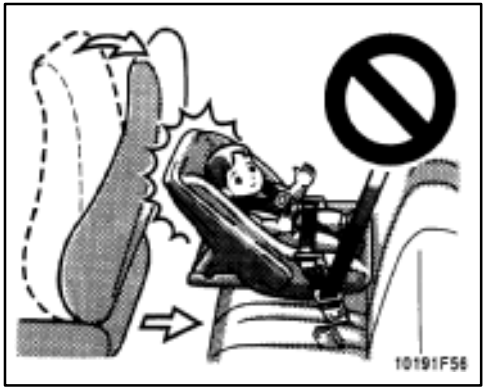

®Do not use a rear–facing child restraint system in the rear seat if it interferes with the lock mechanism of the front seats. This can cause severe injury to the child and front passenger in case of sudden braking or a collision.

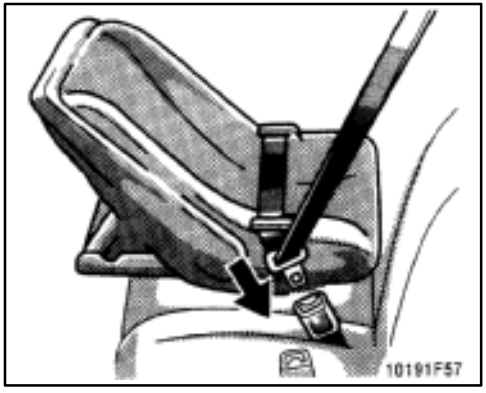

1. Run the lap and shoulder belt through or around the infant seat following the instructions provided by its manufacturer and insert the tab into the buckle taking care not to twist the belt. Keep the lap portion of the belt tight.

CAUTION

®After inserting the tab, make sure the tab and buckle are locked and that the lap and shoulder portions of the belt is not twisted.

®Do not insert coins, clips, etc. in the buckle as this may prevent you from properly latching the tab and buckle.

®If the seat belt does not function normally, it cannot protect your child from injury. Contact your Toyota dealer immediately. Do not use the seat until the seat belt is fixed.

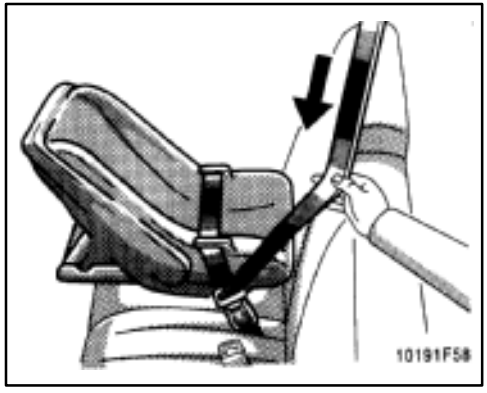

2. Fully extend the shoulder belt to put it in the lock mode. When the belt is then retracted even slightly, it cannot be extended.

To hold the infant seat securely, make sure the belt is in the lock mode before letting the before letting the belt to retract.

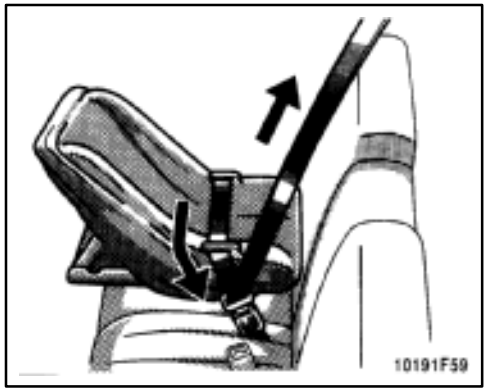

3. While pressing the infant seat firmly against the seat cushion and seatback, let the shoulder belt retract as far as it will go to hold the infant seat securely.

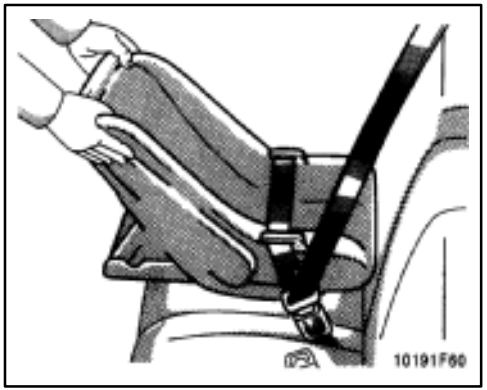

! CAUTION

Make sure the seat belt is securely locked. Also make sure the child restraint system is secure by pushing and pulling it in different directions. Follow all the installation instructions provided by its manufacturer.

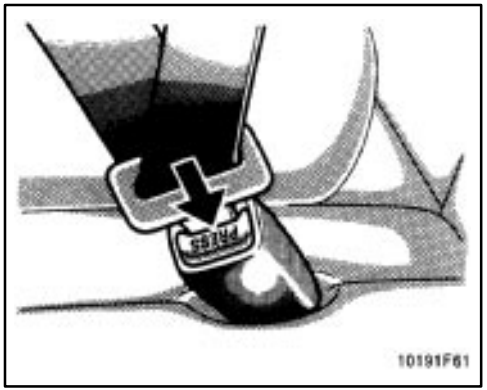

4. To remove the infant seat, press the buckle–release button and allow the belt to retract completely. The belt will move freely again and be ready to work for an adult or older child passenger.

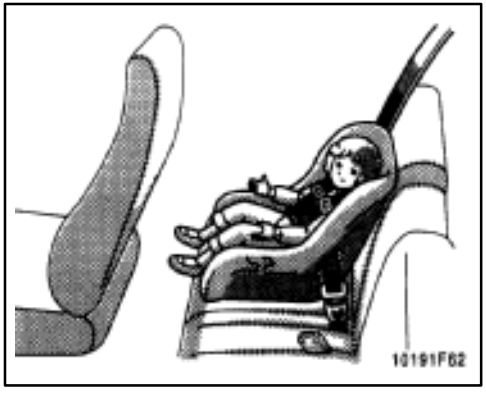

(B) CONVERTIBLE SEAT INSTALLATION

A convertible seats is used in forward–facing and rear–facing depending on the child's age and size. When installing, follow the manufacturer's instruction about the applicable child's age and size.



⚠ CAUTION

®Never use a rear–facing child restraint system in the front seat because the force of the rapid inflation of the passenger airbag can cause severe injury to the child. Vehicles with a passenger airbag display a caution label on the passenger side instrument panel as shown above to remind you not to install a rear–facing child restraint system on the front seat.

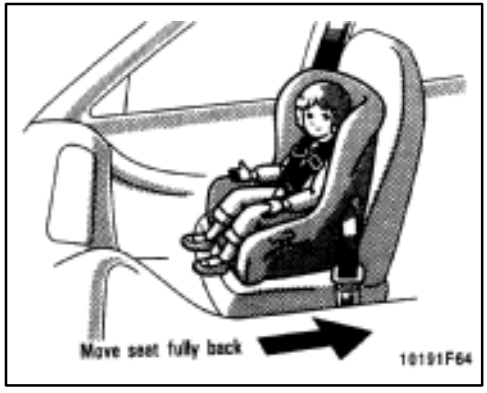

®Only when it is unavoidable should a forward–facing child restraint system be used on the front seat. Always move the seat as far back as possible because the force of deploying airbag would cause serious injury to the child.

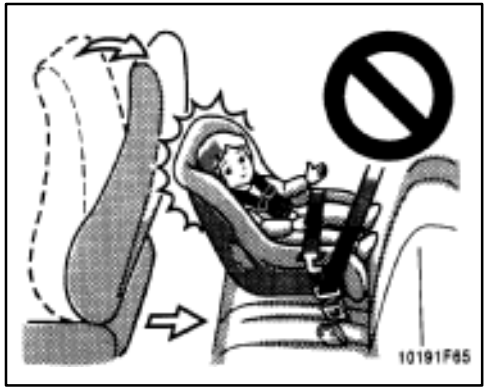

®**Do not use a rear–facing child restraint system in the rear seat if it interferes with the lock mechanism of the front seats. This can cause severe injury to the child and front passenger in case of sudden braking or a collision.**

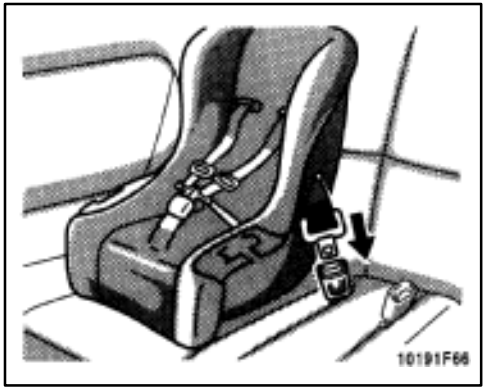

1. Run the lap and shoulder belt through or around the convertible seat following the instructions provided by its manufacturer and insert the tab into the buckle taking care not to twist the belt. Keep the lap portion of the belt tight.

! CAUTION

®**After inserting the tab, make sure the tab and buckle are locked and that the lap and shoulder portions of the belt is not twisted.**

®**Do not insert coins, clips, etc. in the buckle as this may prevent you from properly latching the tab and buckle.**

®**If the seat belt does not function normally, it cannot protect your child from injury. Contact your Toyota dealer immediately. Do not use the seat until the seat belt is fixed.**

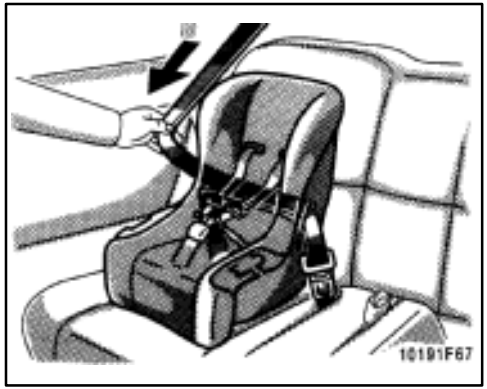

2. Fully extend the shoulder belt to put it in the lock mode. When the belt is then retracted even slightly, it cannot be extended.

To hold the convertible seat securely, make sure the belt is in the lock mode before letting the belt to retract.

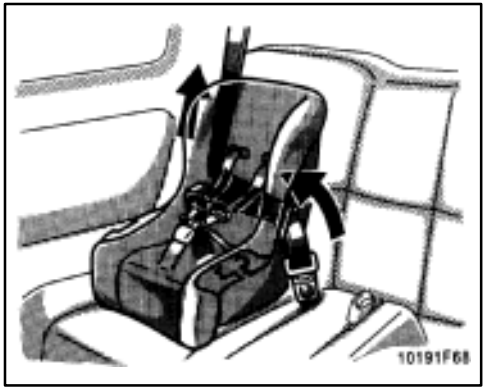

3. While pressing the convertible seat firmly against the seat cushion and seatback, let the shoulder belt retract as far as it will go to hold the convertible seat securely.



! CAUTION

Make sure the seat belt is securely locked. Also make sure the child restraint system is secure by pushing and pulling it in different directions. Follow all the installation instructions provided by its manufacturer.

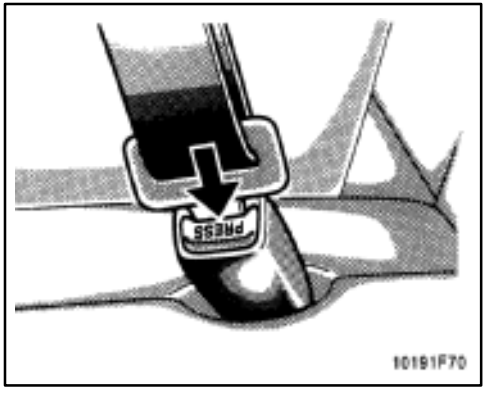

4. To remove the convertible seat, press the buckle–release button and allow the belt to retract completely. The belt will move freely again and be ready to work for an adult or older child passenger.

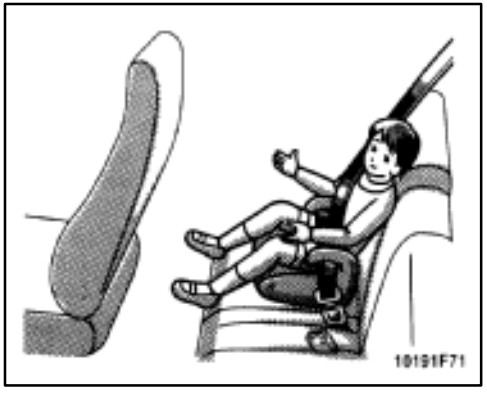

(C)BOOSTER SEAT INSTALLATION

A booster seat is used in forward–facing only.



! CAUTION

Only when it is unavoidable should a forward–facing child restraint system be used on the front seat. Always move the seat as far back as possible because the force of deploying airbag would cause serious injury to the child.



1. Sit the child on a booster seat. Run the lap and shoulder belt through or around the booster seat and child following the instructions provided by its manufacturer and insert the tab into the buckle taking care not to twist the belt.

Make sure the shoulder belt is correctly across the child's shoulder and that the lap belt is positioned as low as possible on child's hips. See "Seat belts" for details.

CAUTION

®Always make sure the shoulder belt is positioned across the center of child's shoulder. The belt should be kept away from child's neck, but not falling off child's shoulder. Failure to do so could reduce the amount of protection in an accident and increase the chance of injury.

®High–positioned lap belts and loose–fitting belts both could increase the chance of injury due to sliding under the lap belt during an accident. Keep the lap belt as low on your hip bone as possible.

®For the safety, do not place the shoulder belt under child's arm.

®After inserting the tab, make sure the tab and buckle are locked and that the lap and shoulder portions of the belt is not twisted.

®Do not insert coins, clips, etc. in the buckle as this may prevent you from properly latching the tab and buckle.

®If the seat belt does not function normally, it cannot protect your child from injury. Contact your Toyota dealer immediately. Do not use the seat until the seat belt is fixed.

—Top strap anchors and locations

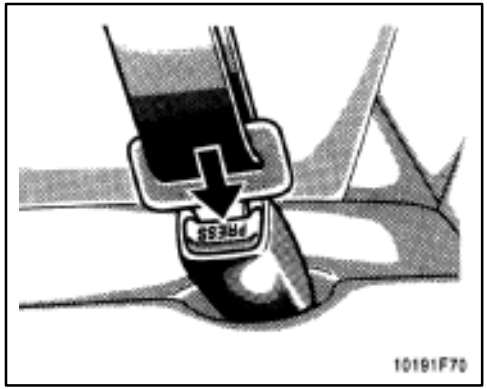

2. To remove the child restraint system, press the buckle–release button and allow the belt to retract.

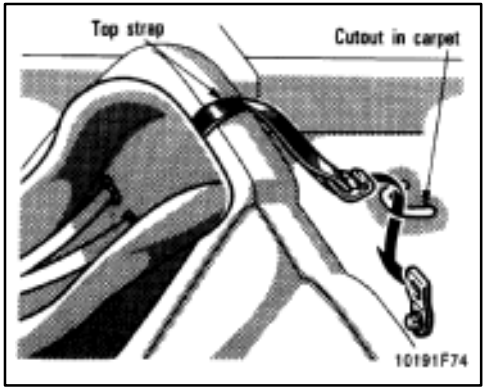

If your child restraint system requires the use of a top strap, latch the hood onto the anchor bracket and tighten the top strap.

Twist the top strap half a turn: make a twist at front top of the rear seatback, not behind it. Then pass the top strap through the cutout in the carpet on the rear cargo floor.

See the following instructions to install the anchor bracket.

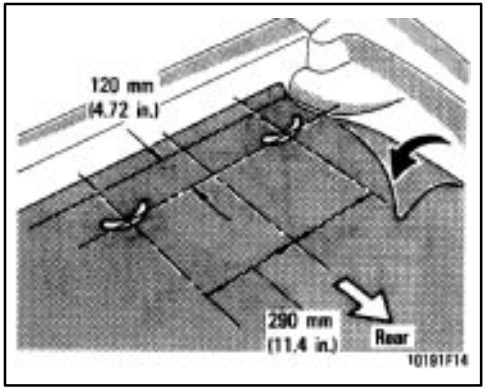

On the rear cargo floor

a. Roll back the carpet on the rear cargo floor to find the anchor location you wish to use.

b. Insert a 5 mm (0.5 in.) spacer and tighten down the anchor bracket for you child restraint system with a bolt. Torque the bolt to 16.5—24.7 N·m (1.68—2.52 kgf·m, 12.2—18.2 ft·lb.).

To make a cutout for the top strap passage, push open the carpet along the perforation with finger pressure. (The perforation can easily be seen from the back side of the carpet.)

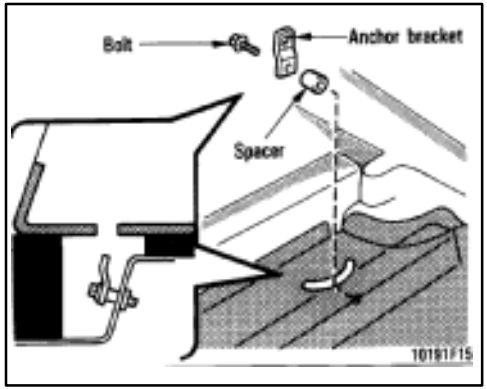

d. After installing the anchor, put the carpet back in place.

To comply with Canada Motor Vehicle Safety Standards, vehicles sold in Canada are provided with a bracket set in the glovebox, designed for use with any of the 3 anchor locations shown in the illustration.

If your child restraint system does not provide any of the necessary parts, ask you Toyota dealer. (See "—Child restraint system.")

Tilt steering wheel

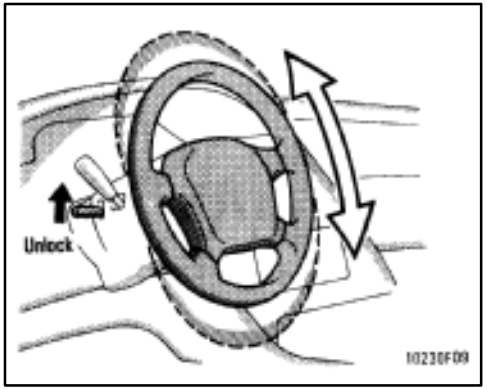

To change the steering wheel angle, hold the steering wheel, pull up the lock release lever, tilt the steering wheel to the desired angle and release the lever.

When the steering wheel is in a low position, it will spring up as you release the lock release lever.

! CAUTION

®Do not adjust the steering wheel while the vehicle is moving.

®After adjusting the steering wheel, try moving it up and down to make sure it is locked in position.

Outside rear view mirrors—

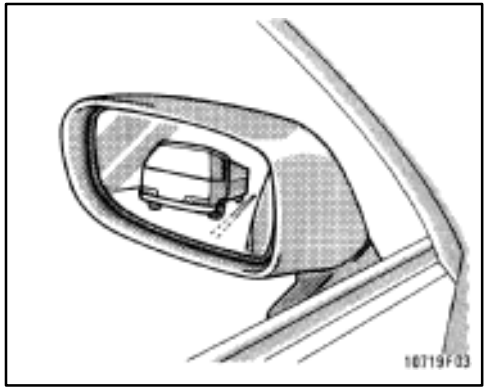

Adjust the mirror so you can just see the side of your vehicle in the mirror.

Be careful when judging the size or distance of any object seen in the outside rear view mirror on the passenger's side. It is a convex mirror with a curved surface. Any object seen in a convex mirror will look smaller and farther away than when seen in a flat mirror.

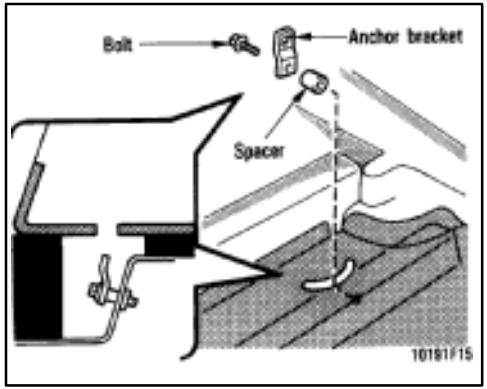

d. After installing the anchor, put the carpet back in place.

To comply with Canada Motor Vehicle Safety Standards, vehicles sold in Canada are provided with a bracket set in the glovebox, designed for use with any of the 3 anchor locations shown in the illustration.

If your child restraint system does not provide any of the necessary parts, ask you Toyota dealer. (See "—Child restraint system.")

Tilt steering wheel

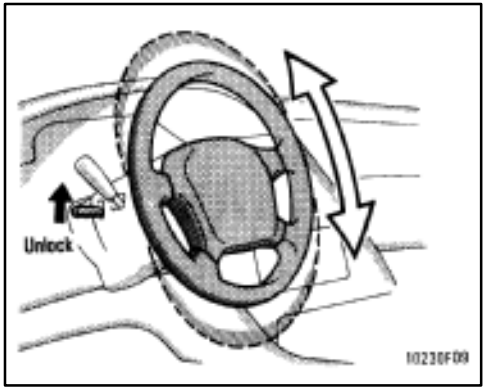

To change the steering wheel angle, hold the steering wheel, pull up the lock release lever, tilt the steering wheel to the desired angle and release the lever.

When the steering wheel is in a low position, it will spring up as you release the lock release lever.

! CAUTION

®Do not adjust the steering wheel while the vehicle is moving.
®After adjusting the steering wheel, try moving it up and down to make sure it is locked in position.

Outside rear view mirrors—

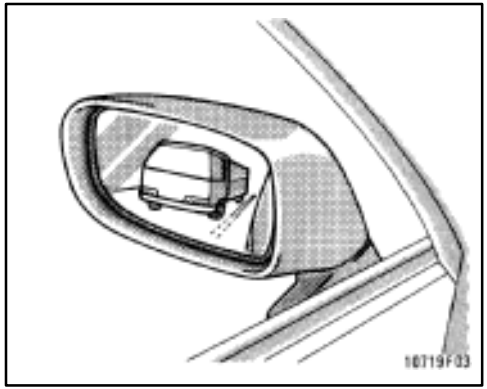

Adjust the mirror so you can just see the side of your vehicle in the mirror.

Be careful when judging the size or distance of any object seen in the outside rear view mirror on the passenger's side. It is a convex mirror with a curved surface. Any object seen in a convex mirror will look smaller and farther away than when seen in a flat mirror.

—Power rear view mirror control

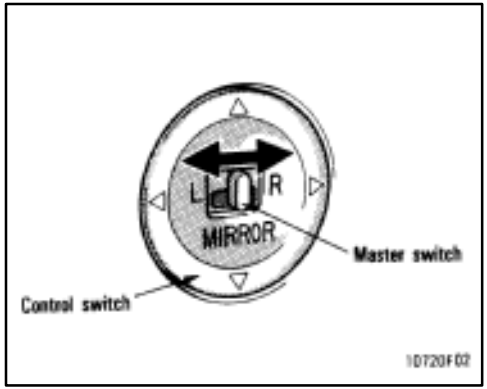

To adjust a power rear view mirror, first place the master switch at “L” (left) or “R” (right) depending on which mirror needs adjusting, then push the control switch in the desired direction.

If the engine is not running, the key must be in the “ACC” position.

NOTICE

If ice should jam the mirror, do not operate the control or scrape the mirror ice. Use a spray de–icer to free the mirror.

—Folding rear view mirrors

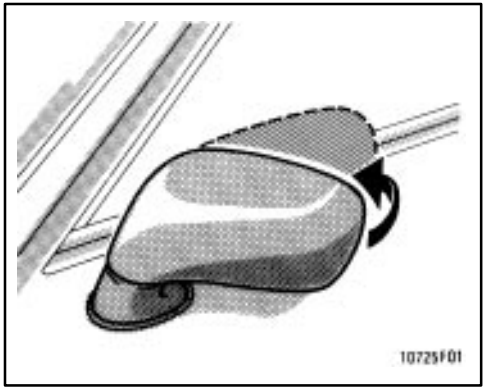

To fold the rear view mirror, push backward.

The rear view mirrors can be folded backward for parking in restricted areas.

Anti–glare inside rear view mirror

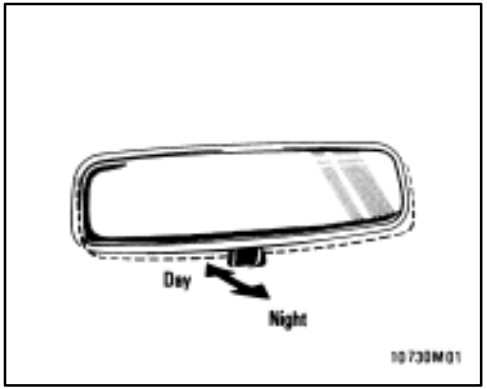

Pull the lever toward you to reduce glare from the headlights of the vehicle behind you during night driving.

Before adjusting the mirror to the position with most clarity, push the day–night change lever away from you (daylight driving position).

Remember that by reducing glare you also lose some rear view clarity.

Part 1

OPERATION OF INSTRUMENTS AND CONTROLS—

Chapter 1–4

Lights, Wipers and Defogger

- ® Headlights and turn signals
- ® Emergency flashers
- ® Instrument panel light control
- ® Front fog lights
- ® Interior lights
- ® Ignition switch light
- ® Luggage compartment light
- ® Windshield wipers and washer
- ® Rear window wiper and washer
- ® Rear window and outside rear view mirror defoggers

Headlights and turn signals

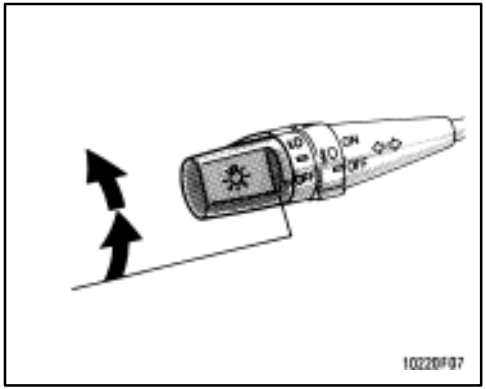

To turn the lights on, twist the knob on the end of the lever.

Daytime running light system (Canada only)—The headlights turn on when the parking brake is released with the engine started, even with the light switch in the "OFF" position. They will not go off until the ignition switch is turned off.

The turn on the other exterior lights and instrument panel lights, twist the knob to the first clickstop.

Under the daytime running light system, the headlights turn on at reduced intensity. Twist the knob to the second clickstop to turn to full intensity for driving at night.

FIRST CLICKSTOP: Only the parking, tail, license plate, side marker and instrument panel lights turn on.

SECOND CLICKSTOP: The headlights also turn on.

The lights automatically turn off when the driver's door is opened with the ignition key turned off. To turn them on again, turn the key to the "ON" position or actuate the headlight switch. If you are going to park for over one week, make sure the headlight switch is off.

NOTICE

To prevent the battery from being discharged, do not leave the lights on for a long period when the engine is not running.

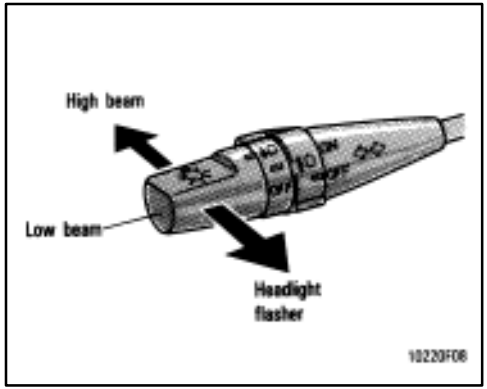

For high beam, push the lever away from you. Pull it toward you for low beam. For the headlight flasher, pull it further back.

A blue light in the instrument panel indicates high beam is on.

The headlight flasher works even when the headlight switch is off.

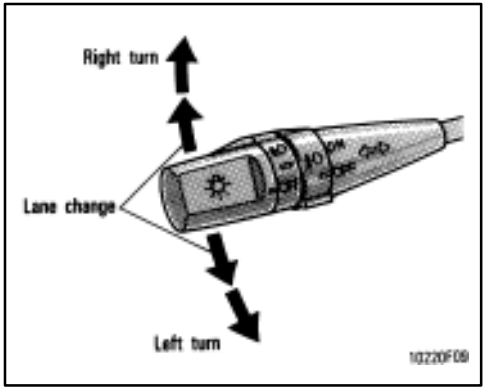

For signaling turns, move the lever up or down in the conventional manner.

The key must be in the “ON” position.

The turn signal is self–cancelling after a turn, but after a lane change, you may have to cancel it by hand. You can also signal a lane change by moving the turn signal lever partway and holding it there. If the green light in the instrument panel flashes faster than normal, it indicates that the front or rear turn signal bulb has burned out.

Emergency flashers

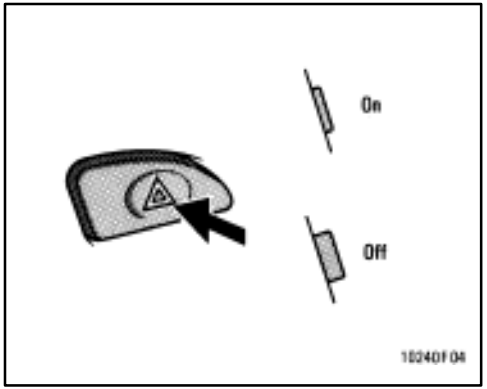

To turn on the emergency flashers, push the switch.

All the turn signal lights will flash.

Turn on the emergency flashers to warn other drivers if your vehicle must be stopped where it might be a traffic hazard.

Always pull as far off the road as possible.

The turn signal light switch will not work when the emergency flashers are operating.

NOTICE

To prevent the battery from being discharged, do not leave the lights on for a long period when the engine is not running.

Instrument panel light control

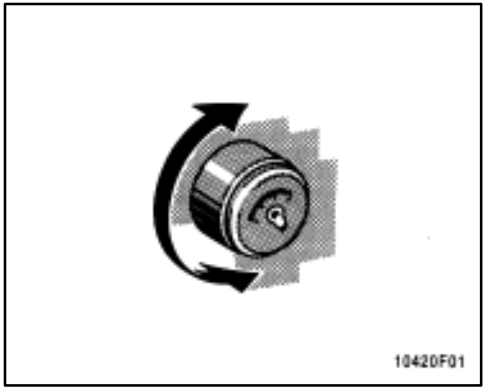

To adjust the brightness of the instrument panel lights, turn the knob.

Front fog lights

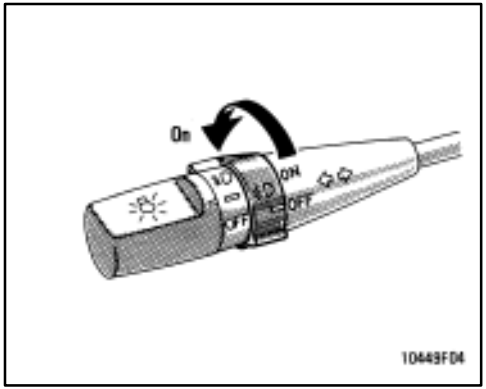

To turn on the front fog lights, twist the knob of the headlight and turn signal switch lever. They will come on when the headlights are turned on low beam.

Interior lights

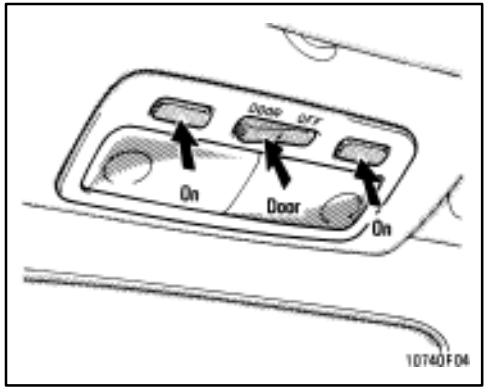

To turn on the interior light, slide the switch.

With the central switch pushed on the “DOOR” side, both lights come on when either of the side doors is opened. The lights remain on for a certain time after both doors are closed.

Ignition switch light

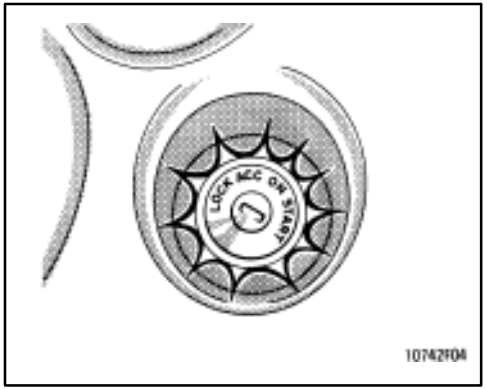

For easy access to the ignition switch, the ignition switch light comes on when either side door is opened.

The light remains on for a certain time after both side doors are closed.

Luggage compartment light

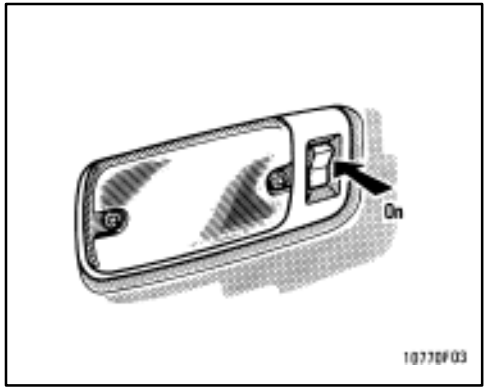

To turn the luggage compartment light on, open the back door and push the switch. Closing the back door will turn the light off.

Windshield wipers and washer

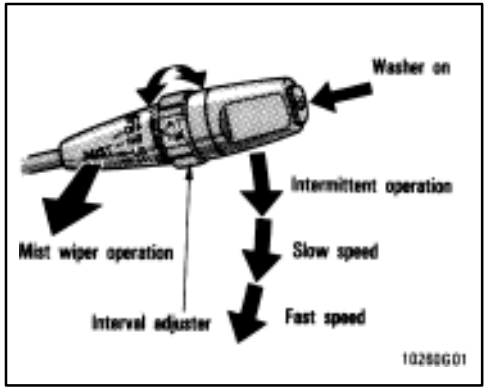

To turn the wipers on, move the lever. To make the washer squirt, push the button on the end of the lever.

The key must be in the “ON” position.

The wipers will operate at intervals when the lever is in the “INT” position. With the lever in this position, the wipers can be adjusted to operate at intervals of 3 to 12 seconds depending on the interval adjuster setting between “S” and “F”.

If a single wipe is desired in mist, pull the lever toward you and release it.

Also, the wipers will automatically operate a couple of times after the washer squirts even with the lever in the “OFF” position.

If the washer does not work, check to see whether the washer tank is empty. For information on adding washer fluid, see “Adding washer fluid” in Chapter 7–3.

In cold weather, warm the windshield with the defroster before using the washer. This will help prevent icing, which could block your vision.

NOTICE

Do not operate the wipers if the windshield is dry. It may scratch the glass.

Rear window wiper and washer

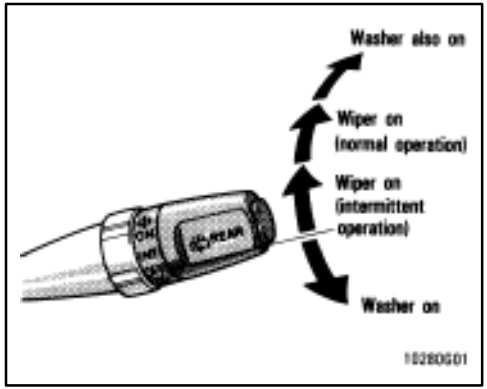

To turn the rear wiper and washer on, twist the knob at the end of the lever.

The key must be in the “ON” position.

The wiper will operate at intervals when the knob is in the “INT” position.

The washer squirts at the two marked knob positions. The knob will automatically return from these positions when it is released.

If the washer does not work, check to see whether the washer tank is empty. For information on adding washer fluid, see “Adding washer fluid” in Chapter 7–3.

NOTICE

Do not operate the wipers if the windshield is dry. It may scratch the glass.

Rear window and outside rear view mirror defoggers

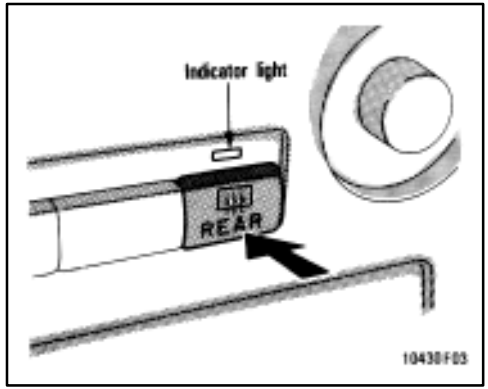

To defog or defrost the rear window, push the switch.

The key must be in the “ON” position.

The thin heater wires on the inside of the rear window will quickly clear the window surface. An indicator light will illuminate to indicate the defogger is operating.

On some models, the heater panels in the outside rear view mirrors will also quickly clear the surfaces. Keep you hands off the mirror faces when the switch is on.

Push the switch once again to turn the defogger off.

The system will automatically shut off after the defoggers have operated about 15 minutes.

Make sure you turn the defoggers off when the surfaces are clear. Leaving the defoggers on for a long time could cause the battery to discharge, especially during stop–and–go driving. The defoggers are not designed for drying rain water or for melting snow.

If the outside rear view mirrors are heavily coated with ice, use a spray de–icer before operating the switch.

NOTICE

When cleaning the inside of the rear window, be careful not to scratch or damage the heater wires.

Part 1

OPERATION OF INSTRUMENTS AND CONTROLS—

Chapter 1–5

Gauges, Meters and Service reminder indicators

- Ⓡ Fuel gauge
- Ⓡ Engine coolant temperature gauge
- Ⓡ Tachometer
- Ⓡ Odometer and two trip meters
- Ⓡ Service reminder indicators and warning buzzers

Fuel gauge

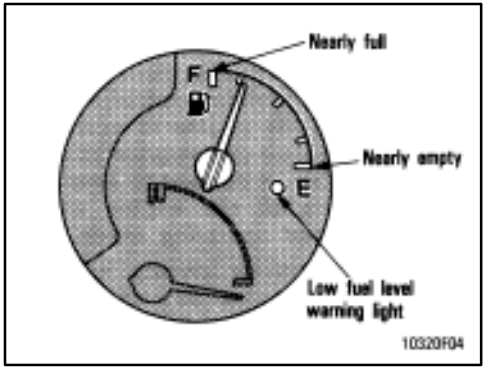

The gauge works when the ignition switch is on and indicates the approximate quantity of fuel remaining in the tank.

It is a good idea to keep the tank over 1/4 full.

This fuel gauge has a non–return type needle which remains at the last indicated position when the ignition switch is turned off.

If the level approaches “E” or the low fuel level warning light comes on, fill the fuel tank as soon as possible.

If the fuel tank is completely empty, the malfunction indicator lamp comes on. Fill the fuel tank immediately.

The indicator lamp goes off after driving several times. If the indicator lamp does not go off, contact your Toyota dealer as soon as possible.

Engine coolant temperature gauge

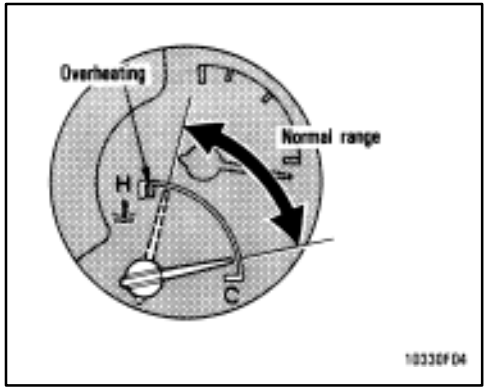

The gauge indicates the engine coolant temperature when the ignition switch is on. The engine operating temperature will vary with changes in weather and engine load.

If the needle points to the red zone or higher, stop your vehicle and allow the engine to cool.

Your vehicle may overheat during severe operating conditions, such as:

- Driving up a long hill on a hot day.
- Reducing speed or stopping after high speed driving.
- Idling for a long period with the air conditioning on in stop–and–go traffic.

NOTICE

- ***Do not remove the thermostat in the engine cooling system as this may cause the engine to overheat. The thermostat is designed to control the flow of coolant to keep the temperature of the engine within the specified operating range.***
- ***Do not continue driving with an overheated engine. See "If your vehicle overheats" in Part 4.***

Tachometer

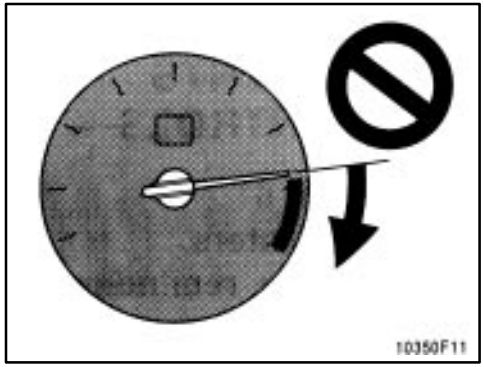

The tachometer indicates engine speed in thousands of rpm (revolutions per minute). Use it while driving to select correct shift points and to prevent engine lugging and overrevving.

Driving with the engine running too fast causes excessive engine wear and poor fuel economy. Remember, in most cases the slower the engine speed, the greater the fuel economy.

NOTICE

Do not let the indicator needle get into the red zone. This may cause severe engine damage.

Odometer and two trip meters

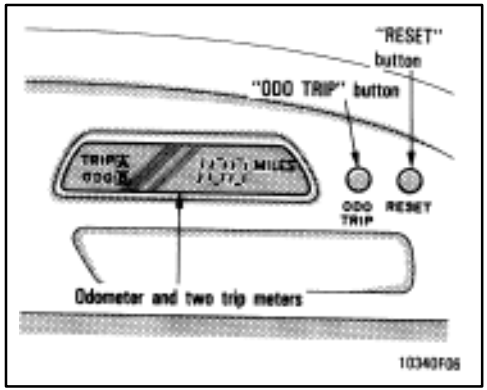

This meter displays the odometer and two trip meters. To change the odometer display to the trip meter display, push the "ODO TRIP" button. To reset the trip meter A to zero, display the meter A reading, then push the "RESET" button. The same applies for the trip meter B.

The odometer records the total distance the vehicle has been driven. The trip meters can record two different distances independently.

You can use one trip meter to calculate the fuel economy and the other to measure the distance on each trip. All trip meter data is cancelled if the electrical power source is disconnected.

The meter display changes each time you push the "ODO TRIP" button, changing in order from the odometer to rip meter A to trip meter B, then back to the odometer.

Service reminder indicators and warning buzzers

If the indicator or buzzer comes on...		Do this.
(a)		Stop and check.
(b)	**BRAKE** (type A)	If parking brake is off, stop and check.
	 (type B)	
(c)	 (Indicator and buzzer)	Fasten seat belts.
(d)		Stop and check.
(e)	 CHECK	Take vehicle to Toyota dealer.

If the indicator or buzzer comes on...		Do this.
(f)	Low fuel level warning light	Fill up tank.
(g)		Stop and check.
(h)		Add engine oil.
(i)	**ABS** (type A)	Take vehicle to Toyota dealer.
	 (type B)	
(j)		Close both side door and back door.
(k)		Replace bulb.

If the indicator or buzzer comes on...		Do this.
(l)		Take vehicle to Toyota dealer immediately.
(m)	**TRAC OFF**	Take vehicle to Toyota dealer.
(n)	Key reminder buzzer	Remove key.

(a) Master Warning Light

This light warns that another service reminder indicator (except seat belt reminder light, low fuel level warning lights, rear light failure warning light, SRS airbag warning light and “TRAC OFF” indicator/ warning light) is on.

If it comes on while you are driving, check the other service reminder indicator that is on with reference to the following description of the indicator.

(b) Brake System Warning Light

This light has the following functions:

Parking brake reminder

If this light is on, make sure the parking brake is fully released. The light should go off.

Low brake fluid level warning

If this light comes on and stays on while you are driving, slow down and pull off the road. Then stop the vehicle carefully. There maybe a problem somewhere in the brake system. Check the fluid level of the see–through reservoir.

To make sure the parking brake has not caused the warning light to come on, check to see that the parking brake is fully released.

If the brake fluid level is low...

At a safe place, test your brakes by starting and stopping.

- ® If you judge that the brakes still work adequately, drive cautiously to your nearest dealer or shop for repairs.
- ® If the brakes are not working, have the vehicle towed in for repairs. (For towing information, see Part 4.)

⚠ CAUTION

It is dangerous to continue driving normally when the brake fluid level is low.

If the brake fluid level is correct...

Have the warning system checked by your Toyota dealer.

(c) Seat Belt Reminder Light and Buzzer

Once the ignition key is turned to “ON” or “START”, the reminder light and buzzer come on if the driver’s seat belt is not fastened. Unless the driver fastens the belt, the light stays on and the buzzer stops after about 4 to 8 seconds.

(d) Discharge Warning Light

This light warns that the battery is being discharged.

If it comes on while you are driving, there is a problem somewhere in the charging system.

The engine ignition will continue to operate, however, until the battery is discharged. Turn off the air conditioning, blower, radio, etc., and drive directly to the nearest Toyota dealer or repair shop.

NOTICE

Do not continue driving if the engine drive belt is broken or loose.

(e) Malfunction Indicator Lamp

This lamp comes on in the following cases.

a. The fuel tank is completely empty. (See “Fuel gauge” in Chapter 1–5 for instructions.)

b. There is a problem somewhere in your engine or automatic transmission electrical system.

If it comes on while you are driving in case b, have your vehicle checked/repaired by your Toyota dealer as soon as possible.

(f) Low Fuel Pressure Warning Light

This light comes on when the fuel level in the tank becomes nearly empty. Fill up the tank as soon as possible.

(g) Low Oil Level Warning Light

This light warns that the engine oil pressure is too low.

If it flickers or stays on while you are driving, pull off the road to a safe place and stop the engine immediately. Call a Toyota dealer or qualified repair shop for assistance.

The light may occasionally flicker when the engine is idling or it may come on briefly after a hard stop. There is no cause for concern if it then goes out when the engine is accelerated slightly.

The light may come on when the oil level is extremely low. It is not designed to indicate low oil level, and the oil level must be checked using the level dipstick.

NOTICE

Do not drive the vehicle with the warning light on—even for one block. It may ruin the engine.

(h) Low Engine Oil Level Warning Light

The light warns that the engine oil level is too low. Add oil as soon as possible. (For instructions, see “Checking the engine oil level” in Chapter 7–2.)

NOTICE

Continued engine operation with low engine oil will damage the engine.

(i) “ABS” Warning Light

This light warns that there is a problem somewhere in your anti–lock brake system.

If the light comes on while you are driving, have your vehicle checked by your Toyota dealer as soon as possible.

The light will come on when the ignition key is turned to the “ON” position. After about 3 seconds, the light will go off.

When the “ABS” warning light is on (and the brake system warning light is off), the brake system operates conventionally but anti–lock brake system is not assisting brake performance so that the wheels can lock–up during sudden braking or braking on slippery road surfaces.

(j) Open Door Warning Light

This light remains on until both side doors and back door are completely closed.

(k) Rear Light Failure Warning Light

If this light comes on when the headlight switch is turned on (at the first or second clickstop), it indicates that one or more of the tail lights are burned out.

If it comes on when the brake pedal is depressed, one or more stop lights are burned out or the stop light circuit is in need of repair.

Have defective bulbs replaced as soon as possible.

(l) SRS Airbag Warning Light

This light will come on when the ignition key is turned to the “ACC” or “ON” position. After about 6 seconds, the light will go off. This means the airbag system is operating properly.

The warning light system monitors the airbag sensors, center airbag sensor assembly, inflators, warning light, interconnecting wiring and power sources.

If either of the following conditions occurs, this indicates a malfunction somewhere in the parts monitored by the warning light system. Contact your Toyota dealer as soon as possible to service the vehicle.

- The light does not come on when the ignition key is turned to the “ACC” or “ON” position or remains on.
- The light comes on while driving.

(m) “TRAC OFF” Indicator/Warning Light

This light comes on when the ignition key is turned to “N”, and will go off after 3 seconds. This means that the system is operating properly.

If one of the following conditions occurs, this indicates a malfunction somewhere in the parts monitored by the warning light system. Contact your Toyota dealer as soon as possible to service the vehicle.

- The light remains on more than 3 seconds after the ignition switch is turned on.
- The light comes on while driving even if the “TRAC OFF” switch is not pushed.
- The light flashes.

(n) Key Reminder Buzzer

This buzzer reminds you to remove the key when you open the driver’s door with the ignition key in the “ACC” or “LOCK” position.

CHECKING SERVICE REMINDER INDICATORS (except the low fuel level warning light)

1. Apply the parking brake.
2. Open one of the side doors or the back door.
   The open door warning light should come on.
3. Close the door.
   The open door warning light should go off.
4. Turn the ignition key to “ACC”.
   The SRS airbag warning light should come on. It goes off after about 6 seconds.
5. Turn the ignition key to “ON”, but do not start the engine.

All the service reminder indicators except the open door warning light and SRS airbag warning light should come on. The “ABS” warning light and “TRAC OFF” indicator/warning light go off after about 3 seconds.

If any service reminder indicator or warning buzzer does not function as described above, either the bulb is burned out or the circuit is in need of repair. Have it checked by your Toyota dealer as soon as possible.

Part 1

OPERATION OF INSTRUMENTS AND CONTROLS—

Chapter 1–6
Ignition switch, Transmission and Parking brake

® Ignition switch with steering lock
® Automatic transmission
® Manual transmission
® Parking brake
® Cruise control

Ignition switch with steering lock

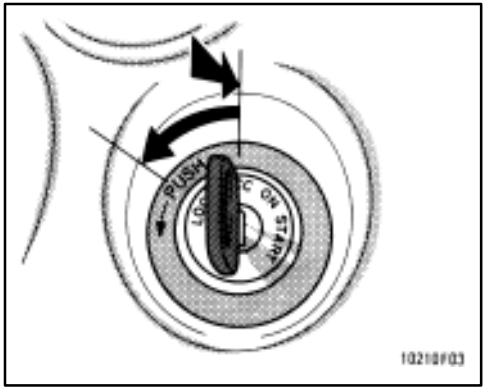

“Start” – Starter motor on. The key will return to the “ON” position when released.

For starting tips, see Part 3.

“ON” – Engine on and all accessories on.

This is the normal driving position.

“ACC” – Accessories such as the radio operate, but the engine is off.

If you leave the key in the “ACC” or “LOCK” position and open the driver’s door, a buzzer will remind you to remove the key.

“LOCK” – Engine is off and the steering wheel is locked. The key can be removed only at this position.

You must push in the key to turn the key from “ACC” to the “LOCK” position. On vehicles with an automatic transmission, the selector lever must be put in the “P” position before pushing the key.

When starting the engine, the key may seem stuck at the “LOCK” position. To free it, first be sure the key is pushed all the way in, and then rock the steering wheel slightly while turning the key gently.

! CAUTION

For manual transmission:
Never remove the key when the vehicle is moving, as this will lock the steering wheel and result in loss of steering control.

NOTICE

Do not leave the key in the “ON” position if the engine is not running. The battery will discharge and the ignition could be damaged.

Automatic transmission

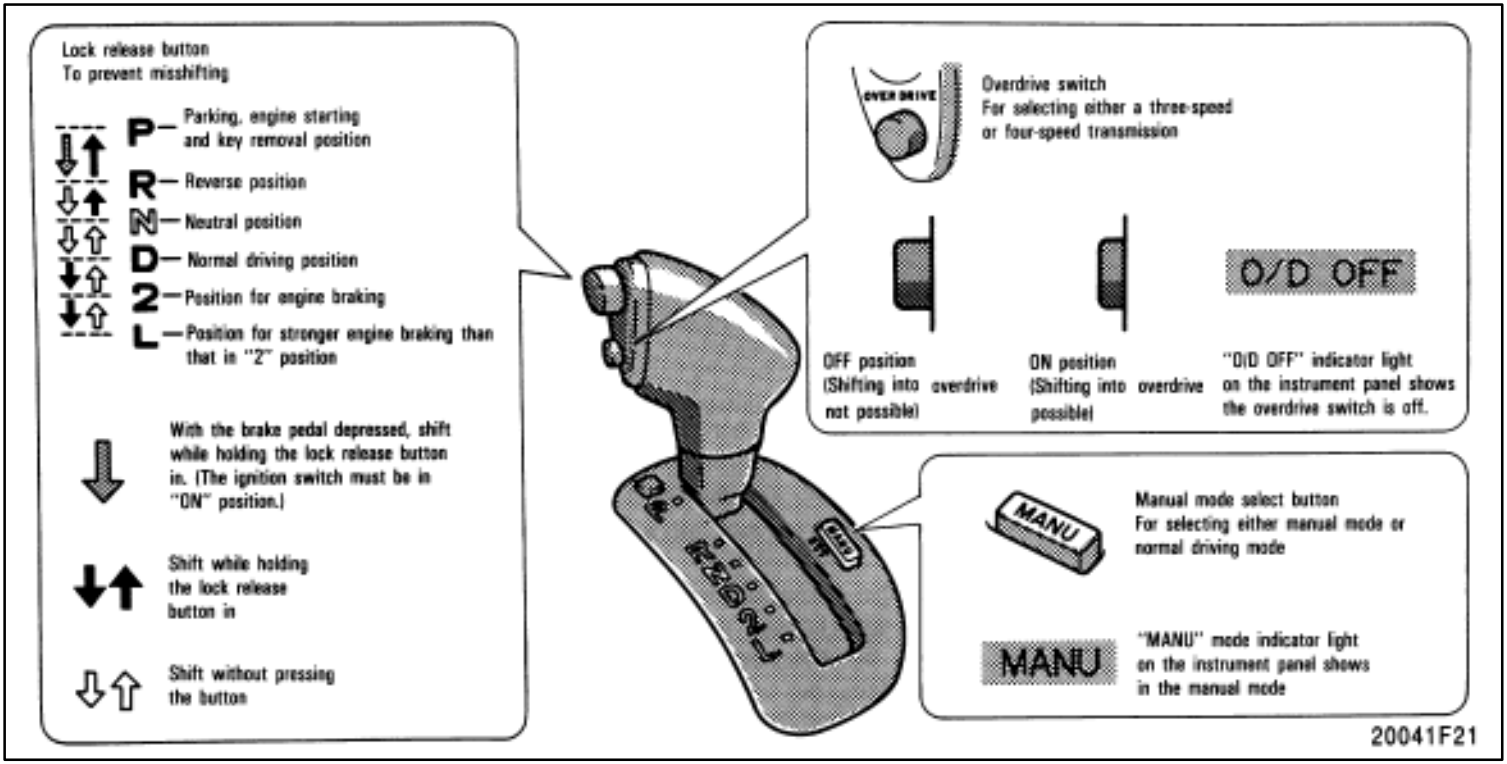

When the cruise control is being used, even if you downshift the transmission by turning off the overdrive switch, engine braking will not be applied because the cruise control is not cancelled. For ways to decrease the vehicle speed, see “Cruise control” in this chapter.

Your automatic transmission has a shift lock system to minimize the possibility of incorrect operation. This means you can only shift out of “P” position when the brake pedal is depressed (with the ignition switch in “ON” position and the lock release button depressed).

(a) Normal Driving

1. Start the engine as instructed in “How to start the engine” in Part 3. The transmission must be in “P” or “N”.
2. With your foot holding down the brake pedal, shift the selector lever to “D”.

In “D” position, the automatic transmission system will select the most suitable gear for running conditions such as normal cruising, hill climbing, hard towing, etc.

Always turn the overdrive switch on for better fuel economy and quieter driving. If the engine coolant temperature is low, the transmission will not shift into overdrive gear even with the overdrive switch on.

CAUTION

Never put your foot on the accelerator pedal while shifting.

3. Release the parking brake and brake pedal. Depress the accelerator pedal slowly for smooth starting.

(b) Using engine braking

To use engine braking, you can downshift the transmission as follows:

® Turn off the overdrive switch. The “O/D OFF” indicator light will come on and the transmission will downshift to the third gear.

® Shift into the “2” position. The transmission will downshift to the second gear when the vehicle speed drops down to or lower than the following speed, and more powerful engine braking will be obtained.

2JZ–GE engine	115 km/h (72 mph)
2JZ–GTE engine	130 km/h (81 mph)

® Shift into the “L” position. The transmission will downshift to the first gear when the vehicle speed drops down to or lower than the following speed, and maximum engine braking will be applied.

2JZ–GE engine	48 km/h (29 mph)
2JZ–GTE engine	60 km/h (37 mph)

When the cruise control is being used, even if you downshift the transmission by turning off the overdrive switch, engine braking will not be applied because the cruise control is not cancelled. For ways to decrease the vehicle speed, see “Cruise control” in this chapter.

CAUTION

Be careful when downshifting on a slippery surface. Abrupt shifting could cause the vehicle to spin or skid.

(c) Using the “2” and “L” positions

The “2” and “L” positions are used for strong engine braking as described previously.

With the selector lever in “2” or “L”, you can start the vehicle in motion as with the lever in “D”.

With the selector lever in “2”, the vehicle will start in the first gear and automatically shift to the second gear.

With the selector lever in “L”, the transmission is engaged in the first gear.

NOTICE

◀*Be careful not to overrev the engine. Watch the tachometer to keep engine rpm from going into the red zone. The approximate maximum allowable speed for each position is given below for your reference:*

2JZ–GE

"2"	*115 km/h (72 mph)*
"L"	*63 km/h (39 mph)*

2JZ–GTE engine

"2"	*130 km/h (81 mph)*
"L"	*70 km/h (44 mph)*

◀*Do not continue hill climbing or hard towing for a long time in the "2" or "L" position. This may cause severe automatic transmission damage from overheating. To prevent such damage, "D" position should be used in hill climbing or hard towing.*

(d) Backing up

1. Bring the vehicle to a complete stop.
2. With the brake pedal held down with your foot, shift the selector lever to the "R" position.

NOTICE

Never shift into reverse while the vehicle is moving.

(e) Parking

1. Bring the vehicle to a complete stop.
2. Pull the parking brake lever up fully to securely apply the parking brake.
3. With the brake pedal pressed down, shift the selector lever to the "P" position.

! CAUTION

While the vehicle is moving, never attempt to move the selector lever into "P" position under any circumstances. Serious mechanical damage and loss of vehicle control may result.

(f) Good driving practice

If the transmission is repeatedly upshifted and downshifted between third gear and overdrive when climbing a gentle slope, the overdrive switch should be turned off. Be sure to turn the switch on immediately afterward.

! CAUTION

Always keep your foot on the brake pedal while stopped with the engine running. This prevents the vehicle from creeping.

NOTICE

Do not hold the vehicle on an upgrade with the accelerator pedal. It can cause the transmission to overheat. Always use the brake pedal or parking brake.

(g) Rocking your vehicle if stuck

! CAUTION

If you rock your vehicle to make it out when it becomes stuck in snow, mud, sand, etc., first check that there is no physical object or people around the vehicle. During operation the vehicle may suddenly move forward or backward, causing injury or damage to nearby people or objects.

Manual transmission

NOTICE

If you rock your vehicle, observe the following precautions to prevent damage to the transmission and other parts.

- ***Do not depress the accelerator pedal while shifting the selector lever or before the transmission is completely shifted to forward or reverse gear.***
- ***Do not race the engine and avoid spinning the wheels.***
- ***If your vehicle remains stuck after rocking the vehicle several times, consider other ways such as towing.***

(h) Driving in manual mode

In the manual mode, the transmission system stops automatic gear shifting. Use this mode when starting your vehicle on a snowy or slippery road, when driving up steep inclines, and down with engine braking.

To set the manual mode, push the “MANU” button. In the manual mode, the “MANU” mode indicator light comes on and the transmission shifts up or down as follows.

“D” position—The transmission is locked in third gear.

When your vehicle speed drops down, the transmission will shift to second gear for smooth accelerating.

“2” position—The transmission is locked in second gear.

“L” position—The transmission is locked in first gear.

NOTICE

Be careful not to overrev the engine when using “2” or “L” position.

If the automatic transmission fluid temperature becomes too high, the “MANU” mode indicator light flashes for several seconds and goes off. The driving mode then automatically changes from manual mode to the normal driving mode.

To cancel the manual mode, push the “MANU” button once again. The “MANU” mode indicator light will go off and the transmission system will work in the normal driving mode.

The manual mode automatically cancels out when the ignition switch is off.

(i) If you cannot shift the selector lever out of “P” position

If you cannot shift the selector lever from the “P” position even though the brake pedal is depressed, use the shift lock override button. For instructions, see “If you cannot shift automatic transmission selector lever” in Part 4.

Manual transmission (5–speed)

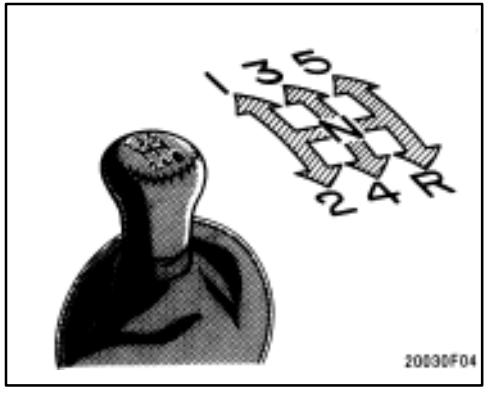

The shift pattern is conventional as shown above.

Press the clutch pedal down fully while shifting, and then release it slowly. Do not rest your foot on the pedal while driving, because it will cause clutch trouble. And do not use the clutch to hold the vehicle when stopped on an uphill grade–use the parking brake.

Recommended shifting speeds

The transmission is fully synchronized and upshifting or downshifting is easy.

For the best compromise between fuel economy and vehicle performance, you should upshift or downshift at the following speeds:

Gear	km/h (mph)
1 to 2 or 2 to 1	24 (15)
2 to 3 or 3 to 2	40 (25)
3 to 4 or 4 to 3	64 (40)
4 to 5 or 5 to 4	72 (45)

Upshifting too soom or downshifting too late will cause lugging, and possibly pinging. Regularly revving the engine to mamimum speed in each gear will cause excessive engine wear and high fuel consumption.

Maximum allowable speeds

To get on a highway or to pass slower traffic, maximum acceleration may be necessary. Make sure you observe the following maximum allowable speeds in each gear:

gear	km/h (mph)
1	54 (34)
2	94 (59)
3	139 (87)

NOTICE

Do not downshift if you are going faster than the maximum allowable speed for the next lower gear.

Good driving practice

If it is difficult to shift into reverse, put the transmission in neutral, release the clutch pedal momentarily, and then try again.

! CAUTION

Be careful when downshifting on a slippery surface. Abrupt shifting could cause the vehicle to spin or skid.

NOTICE

Make sure the vehicle is complet–ely stopped before shifting into reverse.

Manual transmission (6–speed)

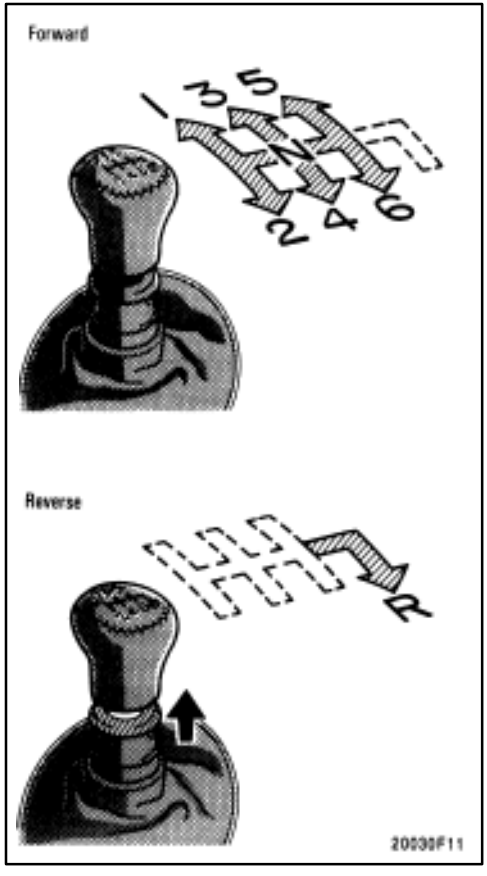

The shift pattern is shown above. You must lift up the ring around the gear shift lever to shift into “R” (reverse).

Press the clutch pedal down fully while shifting, and then release it slowly. Do not rest your foot on the pedal while driving, because it will cause clutch trouble. And do not use the clutch to hold the vehicle when stopped on an uphill grade–use the parking brake.

Recommended shifting speeds

The transmission is fully synchronized and upshifting or downshifting is easy.

For the best compromise between fuel economy and vehicle performance, you should upshift or downshift at approximately the following speeds:

gear	km/h	(mph)
1 to 2 or 2 to 1	54	(34)
2 to 3 or 3 to 2	40	(25)
3 to 4 or 4 to 3	64	(40)
4 to 5 or 5 to 4	72	(45)
5 to 6 or 6 to 5	80	(50)

Upshifting too soon or downshifting too late will cause lugging, and possibly pinging. Regularly revving the engine to maximum speed in each gear will cause excessive engine wear and high fuel consumption.

Maximum allowable speeds

To get on a highway or to pass slower traffic, maximum acceleration may be necessary. Make sure you observe the following maximum allowable speeds in each gear:

gear	km/h	(mph)
1	60	(38)
2	97	(61)
3	136	(85)
4	175	(109)

NOTICE

Do not downshift if you are going faster than the maximum allowable speed for the next lower gear.

Good driving practice

If it is difficult to shift into reverse, put the transmission in neutral, release the clutch pedal momentarily, and then try again.

CAUTION

Be careful when downshifting on a slippery surface. Abrupt shifting could cause the vehicle to spin or skid.

NOTICE

Make sure the vehicle is complete–ly stopped before shifting into reverse.

Parking brake

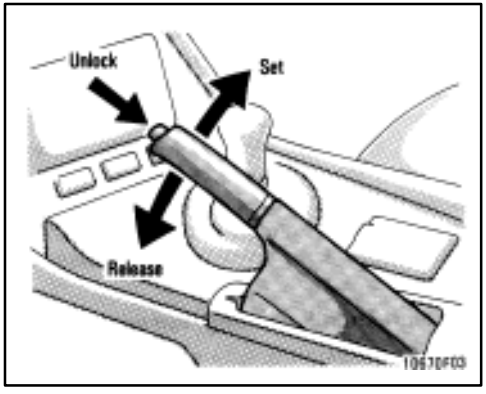

To set: Pull up the lever.

To release: Pull up slightly, press the thumb button, and lower.

Before leaving your vehicle, firmly apply the parking brake. For better holding power, first depress the brake pedal and hold it while setting the parking brake.

CAUTION

Before driving, be sure the parking brake is fully released and the parking brake reminder light is off.

Cruise control

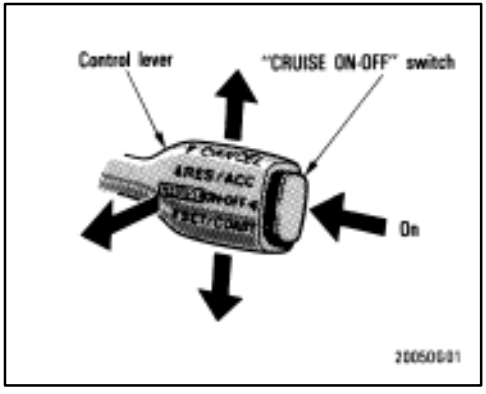

The cruise control allows you to cruise the vehicle at a desired speed over 40 km/h (25 mph)even with your foot off the accelerator pedal.

Your cruising speed can be maintained up or down grades within the limits of engine performance, although a slight speed change may occur when driving up or down the grades. On steeper hills, a greater speed change will occur so it is better to drive without the cruise control

CAUTION

®To help maintain maximum control of your vehicle, do not use the cruise control when driving in heavy or varying traffic, or in slippery (rainy, icy or snow–covered) or winding roads.

®Avoid vehicle speed increases when driving downhill. If the vehicle speed is too fast in relation to the cruise control set speed, cancel the cruise control then downshift the transmission to use engine braking to slow down.

TURNING ON THE SYSTEM

To operate the cruise control, push the "CRUISE ON–OFF" switch. This turns the system on. The indicator light in the instrument panel shows that you can now set the vehicle at a desired cruising speed. Another push will turn the system completely off.

CAUTION

To avoid accidental cruise control engagement, keep the "CRUISE ON–OFF" switch off when not using the cruise control.

SETTING AT A DESIRED SPEED

On vehicles with automatic transmission, the transmission must be in "D" before you set the cruise control speed.

Bring your vehicle to the desired speed, push the lever down in the "SET/COAST" direction and release it. This sets the vehicle at that speed. If the speed is not satisfactory, tap it down for a slower speed. Each tap changes the set speed by 1.6 km/h (1.0 mph). You can now take your foot off the accelerator pedal.

If you need acceleration — for example, when passing—depress the accelerator pedal enough for the vehicle to exceed the set speed. When you release it, the vehicle will return to the speed set prior to the acceleration.

CAUTION

For manual transmission:
While driving with the cruise control on, do not shift to neutral without depressing the clutch pedal, as this may cause engine racing or overreving.

CANCELLING THE PRESET SPEED

You can cancel the preset speed by:

a. Pulling the lever in the "CANCEL" direction and releasing it.

b. Depressing the brake pedal.

c. Depressing the clutch pedal (manual transmission).

If the vehicle speed falls below about 40 km/h (25 mph), the preset speed will automatically cancel out.

If the vehicle speed drops 16 km/h (10 mph) below the preset speed, the preset speed will also automatically cancel out.

If the preset speed automatically cancels out other than for the above cases have your vehicle checked by your Toyota dealer at the earliest opportunity.

RESETTING AT A FASTER SPEED

Press the control lever upward in the “RES/ACC” direction and hold it. Release the lever when the desired speed is attained. While the lever is held up, the vehicle will gradually gain speed.

However, a faster way to reset is to accelerate the vehicle and then push the lever down in the “SET/COAST” direction.

RESETTING AT A SLOWER SPEED

Push the control lever down in the “SET/COAST” direction and hold it. Release the lever when the desired speed is attained. While the lever is held down, the vehicle speed will gradually decrease.

However, a faster way to reset is to depress the brake pedal and then push the lever down in the “SET/COAST” direction.

RESUMING THE PRESET SPEED

If the preset speed is cancelled by pulling the control lever or by depressing the brake pedal or clutch pedal, pushing the lever up in the “RES/ACC” direction will restore the speed set prior to cancellation.

However, once the vehicle speed falls below about 40 km/h (25 mph), the preset speed will not be resumed.

CRUISE CONTROL FAILURE WARNING

If the “CRUISE” indicator light in the instrument cluster flashes when using the cruise control, press the “CRUISE ON–OFF” button to turn the system off and then press it again to turn it on.

If any of the following conditions then occurs, there is some trouble in the cruise control system.

- ® The indicator light does not come on.
- ® The indicator light flashes again.
- ® The indicator light goes out after it comes on.

If this is the case, contact your Toyota dealer and have your vehicle inspected.

Part 1

OPERATION OF INSTRUMENTS AND CONTROLS—

Chapter 1–7

Car audio system and Air conditioning system

Car audio system

Reference
Using your audio system: some basics
Using your audio system: controls and features
Anti–theft system
Car audio system operating hints

Air conditioning system

Controls
Air flow selector settings
Operating tips
Instrument panel vents

Car audio system—

—Reference

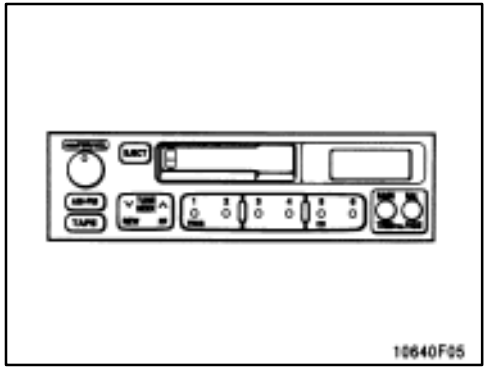

Type 1–1: AM·FM ETR radio/cassette player

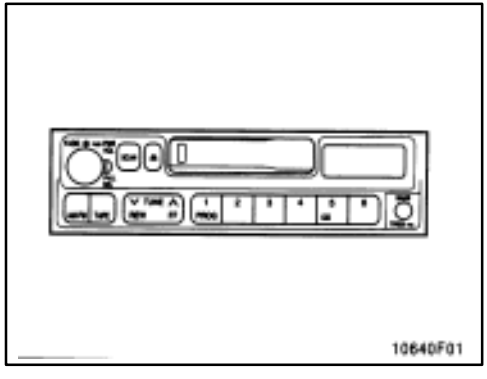

Type 1–2: AM·FM ETR radio/cassette player

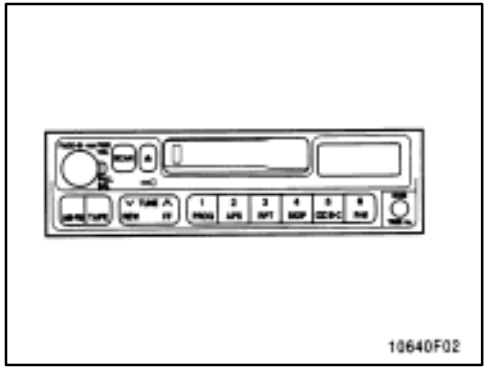

Type 1–3: AM·FM ETR radio/cassette player

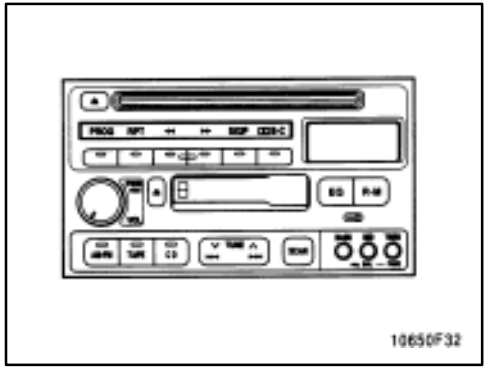

Type 2: AM·FM ETR radio/cassette player/compact disc player

—Using your audio system: some basics

This section describes some of the basic features on Toyota audio systems. Some information may not pertain to your system.

Your audio system works when the ignition key is in the “ACC” or “ON” position.

TURNING THE SYSTEM ON AND OFF

Push “PWR · VOL” or “PWR/VOL” to turn the audio system on and off.

Push “AM · FM”, “TAPE” or “CD” to turn on that function without pushing “PWR · VOL” or “PWR/VOL”.

You can turn on the cassette player by inserting a cassette tape.

You can turn off the cassette player by ejecting the cassette tape. If the audio system was previously off, then the entire audio system will be turned off when you eject the cassette tape. If the radio was previously on, it will come on again.

SWITCHING BETWEEN FUNCTIONS

Push “AM · FM”, “TAPE” or “CD” if the system is already on but you want to switch from one function to another.

TONE AND BALANCE

For details about your system’s tone and balance controls, see the description of your own system.

Tone

How good an audio program sounds to you is largely determined by the mix of the treble, midrange, and bass levels. In fact, different kinds of music and vocal programs usually sound better with different mixes of treble, midrange, and bass.

Balance

A good balance of the left and right stereo channels and of the front and rear sound levels is also important.

Keep in mind that if you are listening to a stereo recording or broadcast, changing the right/left balance will increase the volume of one group of sounds while decreasing the volume of another.

YOUR RADIO ANTENNA

To lower a manual antenna, carefully push it down.

To lower a power antenna, turn off the audio system by pushing “PWR · VOL” or “PWR/VOL”, or turn the ignition key to “LOCK”.

On some models, the power antenna automatically retracts when the radio mode is switched off to turn on the cassette tape player or compact disc player.

NOTICE

To prevent damage to the antenna, make sure it is retracted before driving your Toyota through an automatic car wash.

YOUR CASSETTE PLAYER

When you insert a cassette, the exposed tape should be to the right.

NOTICE

Do not oil any part of the player and do not insert anything other than cassette tapes into the slot, or the tape player may be damaged.

YOUR COMPACT DISC PLAYER

When you insert a disc, gently push it in with the label side up. (The player will automatically eject a disc if the label side is down.) The compact disc player will play from track 1 through the end of the disc. Then it will play from track 1 again.

NOTICE

Never try to disassemble or oil any part of the compact disc player. Do not insert anything except a compact disc into the slot.

8 cm (3 in.) compact disc singles

Your compact disc player does not need an adaptor to play compact disc singles. Compact disc singles are about 8 cm (3 in.) in diameter–smaller than standard discs.

After you eject a compact disc single, do not insert a standard 12 cm (5 in.) disc until “DISC” disappears from the display.

NOTICE

Do not use an adaptor for compact disc singles—it could cause tracking errors or interfere with the ejection of compact discs.

—Using your audio system: controls and features

® **Type 1–1**

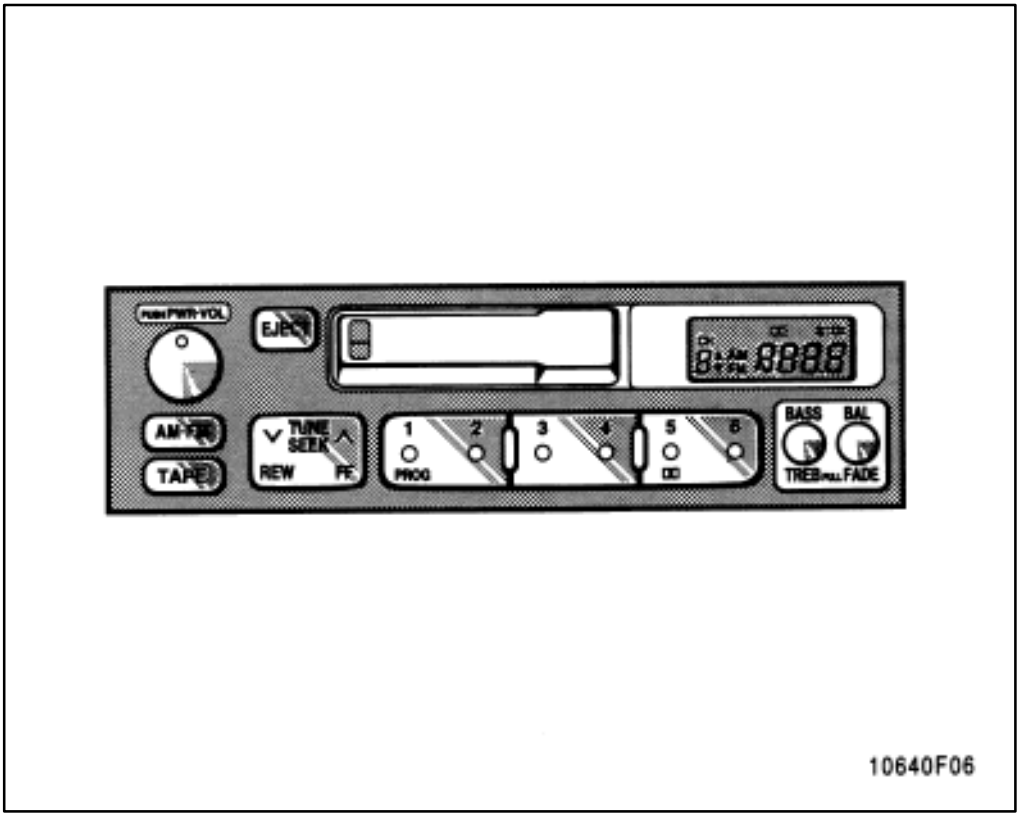

Details of specific buttons, controls, and features are described in the alphabetical listing that follows.

Ⓡ **Type 1–2**

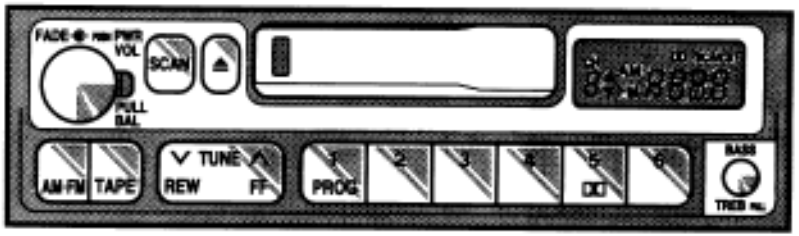

10640F03

Details of specific buttons, controls, and features are described in the alphabetical listing that follows.

® **Type 1–3**

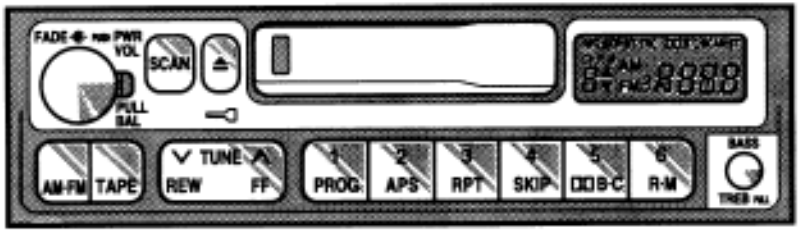

10640F04

Details of specific buttons, controls, and features are described in the alphabetical listing that follows.

1 2 3 4 5 6 (Preset buttons)

These buttons are used to preset and tune in radio stations.

To preset a station to a button: Tune in the desired station (see “TUNE” or “TUNE/SEEK”). Push and hold down the button until you hear a beep–this will set the station to the button. The button number will appear on the display.

To tune in to a preset station: Push the button for the station you want. The button number and station frequency will appear on the display.

Type 1–1 and 1–2—These systems can store one AM and one FM station for each button. The preset station memory will be canceled out if the power source is interrupted (battery disconnected or fuse blown).

Type 1–3—These systems can store one AM and two FM stations for each button. (The display will show “AM”, “FM1”, or “FM2” when you push “AM · FM”.) To cancel out the preset station memory, push “1”, “2”, and “3” at the same time and hold them in until you hear a beep.

⏏ /EJECT (Eject button)

Push this button to eject a cassette.

After you turn the ignition to “LOCK”, you will be able to eject a cassette but you will not be able to reinsert it.

AM · FM

Push “AM · FM” to switch between the AM and FM bands.

Type 1–1 and 1–2—”AM” or “FM” will appear on the display.

Type 1–3—”AM”, “FM1” or “FM2” will appear on the display.

If the audio system is off, you can turn on the radio by pushing “AM · FM”. Also, push “AM·FM” to switch from cassette operation to radio operation.

APS (Automatic program selection)

Type 1–3 only

The automatic program selection (APS) feature allows you to program your cassette player to skip forward or backward to locate the song you want to hear. You can skip up to nine tracks at a time.

Push “APS”. “APS” and “1” will appear on the display.

Next, push “APS” until the number on the display reaches the number of tracks you want to skip. If you push “APS” ten times, the APS feature will be turned off.

If you choose the number “1”, the player will rewind to the beginning of the current track.

When counting the number of tracks you want to rewind, remember to count the current track as well. For example, if you want to rewind to a song that is two before the song you are listening to, push “APS” until “3” appears on the display.

Finally, push “REW” or “FF” to choose the direction you want to skip. The player will rewind or fast forward the selected number of tracks and play.

The APS number you select can be higher than the number of tracks remaining on the current cassette side. After the beginning or end of the tape is reached, the player will automatically reverse sides and rewind or fast forward the additional number of tracks.

There must be at least 3 seconds of blank space between tracks in order for the APS feature to work correctly. In addition, the APS feature may not work well with some spoken word, live, or classical recordings.

BAL (Balance)

This knob lets you adjust the balance between the right and left speakers.

BASS

This knob lets you adjust the bass level.

Push “BASS/TREB” so that it pops out of its retracted position. Turn the knob to adjust the bass. Push the knob back into its retracted position.

Dolby® NR*

Type 1–1 and 1–2 only

If you are listening to a tape that was recorded with Dolby® Noise Reduction, push the button marked with the double–D symbol. The double–D symbol will appear on the display. Push the button again to turn off Dolby® NR.

The Dolby NR mode reduces tape noise by about 10 dB. For best sound reproduction, play your tapes with this button on or off according to the mode used for recording the tape.

*: Dolby noise reduction manufactured under license from Dolby Laboratories Licensing Corporation. “DOLBY” and the double D symbol are trademarks of Dolby Laboratories Licensing Corporation.

Dolby® B · C*

Type 1–3 only

If you are listening to a tape that was recorded with Dolby® B or C Noise Reduction, push the button marked with the double–D symbol until the appropriate symbol appears on the display. To turn off Dolby®, push the button until the symbol disappears from the display.

The Dolby B NR mode reduces tape noise by about 10dB. The Dolby C NR mode reduces tape noise by another 10 dB, or about 20 dB total. For best sound reproduction, select the same NR mode that was used to record the tape.

*: Dolby noise reduction manufactured under license from Dolby Laboratories Licensing Corporation. “DOLBY” and the double D symbol are trademarks of Dolby Laboratories Licensing Corporation.

FADE

Move the “FADE” ring around “PWR/VOL” to adjust the front/rear balance.

MTL (Metal) display

Type 1–3 only

If a metal or chrome equivalent cassette tape is put in the cassette player, the player will automatically adapt to it and “MTL” will appear on the display.

PROG (Program)

Type 1–2 and 1–3 only

push “PROG” to select the other side of a cassette tape. The display indicates which side is currently selected (“∧” indicates top side, “∨” indicates bottom side).

Auto–reverse feature—After the cassette player reaches the end of a tape side, it automatically reverses and begins to play the other side. This is true whether the cassette was playing or fast forwarding.

PWR/VOL (Power/Volume)

Push “PWR/VOL” to turn the audio system on and off. Turn the “PWR/VOL” knob to adjust the volume.

Pull out and then turn “PWR/VOL” to adjust the balance between the right and left speakers. Move “FADE” around “PWR/VOL” to adjust the front/rear balance.

REW/FF (Rewind/Fast forward)

Push the “FF” side of the button to fast forward a cassette tape. “FF” will appear on the display. Push the “REW” side to rewind a tape. “REW” will appear on the display.

To stop the tape while it is fast forwarding, push “FF” or “TAPE”; to stop the tape while it is rewinding, push “REW” or “TAPE”. The tape will immediately begin to play.

If a tape side rewinds completely, the cassette player will stop and then play that same side. If a tape fast forwards completely, the cassette palyer will play the other side of the tape, using the auto–reverse feature.

R.M (Radio monitor)

Type 1–3 only

The radio monitor feature allows you to listen to the radio while a cassette is being rewound or fast forwarded.

Push “R · M”. “R · M” will appear on the display. Any time you are rewinding or fast forwarding a cassette tape, the radio will play the station that was set most recently. (You can not change the radio station unless you switch out of the cassette player function.)

Push “R · M” again to turn off the R’M feature.

RPT (Repeat)

Type 1–3 only

The repeat feature automatically replays the current cassette.

Push “RPT” while the track is playing. “RPT” will appear on the display. When the track ends, it will automatically be rewound and replayed. This process will be continued until you push the button again to turn off the repeat feature.

There must be at least 3 seconds of blank space between tracks in order for the repeat feature to work correctly.

SCAN

Type 1–2 and 1–3 only

You can either scan all the frequencies on a band or scan only the preset stations for that band.

To scan the preset stations: quickly push and release “SCAN”. If you hear a beep, you held the button too long, and the radio will scan all the frequencies. The radio will tune in the next preset station up the band, stay there for a few seconds, and the move to the next preset station. To select a station, push “SCAN” a second time.

To scan all the frequencies: Push “SCAN” until you hear a beep. The radio will find the next station up the station band, stay there for a few seconds, and then scan again. To select a station, push “SCAN” a second time.

Cassette Player

Type 1–3 only

The cassette player scan feature is similar to the radio scan feature and uses the same button.

Push “SCAN”. “SCAN” will appear on the display. The player will fast forward to the next cassette track, play it for 12 seconds, and then scan again. To select a track, push “SCAN” a second time. If the player reaches the end of one side of a cassette tape, it will continue scanning on the other side.

SKIP

Type 1–3 only

The skip feature allows you to fast forward past long stretches of blank tape. This is especially useful at the end of cassettes.

Push “SKIP”. “SKIP” will appear on the display. The cassette player will keep track of how much blank space it plays. Any time it has played about 10 seconds of blank tape, it will automatically fast forward to the next track and begin to play.

Push the button a second time to turn off the skip feature.

ST (Stereo reception) display

Your radio automatically changes to stereo reception when a stereo broadcast is received. “ST” appears on the display. If the signal becomes weak, the radio reduces the amount of channel separation to prevent the weak signal from creating noise. If the signal becomes extremely weak, the radio switches from stereo to mono reception.

TAPE

Push “TAPE” to switch from radio operation to cassette operation. If the audio system is off, you can turn on the cassette player by pushing “TAPE”. If both cases, a cassette must already be loaded in the player.

TREB (Treble)

This knob lets you adjust the treble level.

Push “BASS/TREB” so that it pops out of its retracted position. Pull out the knob. Turn the knob to adjust the treble. Push the knob back into its retracted position.

TUNE/SEEK

Tuning

Your Toyota has an electronic tuning radio (ETR).

Push and release the “∧” (up) or “∨” (down) side of “TUNE/SEEK” to step up or down the station band. If you hear a beep, you held the button too long and the radio will go into the seek mode.

Seeking

In the seak mode, the radio finds and plays the next station up or down the station band.

To seek a station, push and hold the “∧” or “∨” side of “TUNE/SEEK” until you hear a beep. Do this again to find another station.

Ⓡ **Type 2**

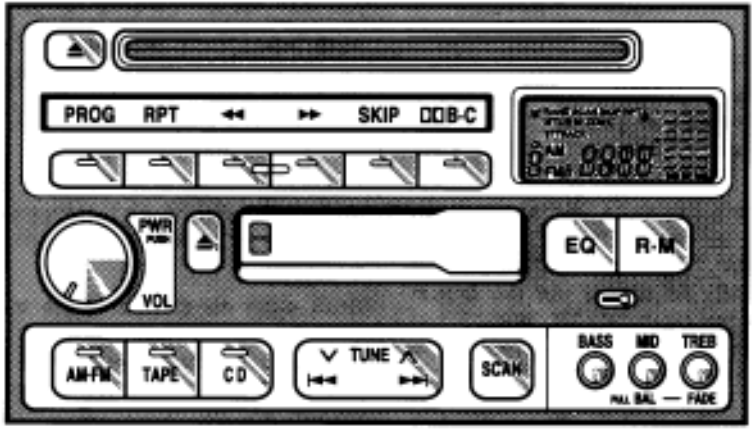

10650F33

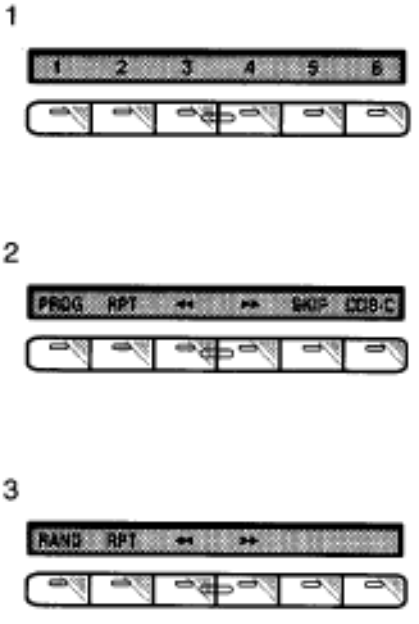

10650F23

Button display for radio/cassette tape player/compact disc player

Your audio system shows there different button displays that changes in accordance with the audio mode you have selected.

Radio display (display 1)

Cassette player display (display 2)

Compact disc player display (display 3)

Details of specific buttons, controls, and features are described in the alphabetical listing that follows.

1 2 3 4 5 6 (Press buttons)

These buttons are used to preset and tune in radio stations.

To preset a station to a button: Tune in the desired station (see “TUNE” button). Push and hold down the button until you hear a beep–this will set the station to the button. The button number will appear on the display.

To tune in to a preset station: Push the button for the station you want. The button number and station frequency will appear on the display.

These systems can store one AM and two FM stations for each button. (The display will show “AM”, “FM1”, or “FM2” when you push “AM · FM”) To cancel out the preset station memory, push “1”, “2”, and “3” at the same time and hold them in until you hear a beep.

⏏ (Eject Button)

Push the cassette tape eject button to eject a cassette. Push the compact disc eject button to eject a compact disc.

After you turn the ignition to “LOCK”, you will be able to eject a cassette or disc but you will not be able to reinsert it.

I◀◀/⁄®®I (Track down/up button)

By using this button, you can skip up or down to a different track.

Cassette Player

You can skip up to nine tracks at a time.

Push the up or down side of the button. “1. FF” or “1. REW” will appear on the display.

Next, push either side of the track button until the number on the display reaches the number of tracks you want to skip. If you push the button ten times, the skip feature will be turned off.

When counting the number of tracks you want to rewind, remember to count the current track as well. For example, if you want to rewind to a song that is two before the song you are listening to, push on the down side of the button until “3. REW” appears on the display.

If you have pushed the track button more than you wanted to, push the other side of the button. The track number will be reduced.

The track number you select is not valid if it is higher than the number of tracks remaining on the current cassette side.

After the beginning of the tape is reached, the player will automatically start playing the same side.

After the end of the tape is reached, the player will automatically reverse sides and start playing the other side.

There must be at least 3 seconds of blank space between tracks for the track button to work correctly. In addition, the feature may not work well with some spoken word, live, or classical recordings.

Compact Disc Player

Push either side of the track button until the number of the track you want to listen to appears on the display. If you want to return the beginning of the current track, push the down side of the button one time, quickly.

◀◀/®® (Reverse/Fast forward buttons)

Cassette Player

Push the fast forward button to fast forward a cassette tape. “FF” will appear on the display. Push the reverse button to rewind a tape. “REW” will appear on the display.

To stop the tape while it is fast forwarding, push on the up side of the track down/up button or “TAPE”’; to stop the tape while it is rewinding, push on the down side of the track down/up button or “TAPE”.

If a tape side rewinds completely, the cassette player will stop and then play that same side. If a tape fast forwards completely, the cassette player will play the other side of the tape, using the auto–reverse feature.

Compact Disc Player

If you want to fast forward or reverse through a compact disc track, push and hold in the fast forward or reverse button. When you release the button, the compact disc player will resume playing.

AM · FM

Push “AM·FM” to switch between the AM and FM bands. “AM”, “FM1” or “FM2” will appear on the display. These systems allow you to set twelve FM stations, two for each button.

If the audio system is off, you can turn on the radio by pushing “AM · FM”. Also, push “AM · FM” to switch from cassette or compact disc operation to radio operation.

BALL (Balance)

This knob lets you adjust the balance between the right and left speakers.

Push “MID/BAL” so that it pops out of its retracted position. Pull out the knob. Turn the knob to adjust the balance. Push the knob back into its retracted position.

BASS

This knob lets you adjust the bass level.

Push “BASS” so that it pops out of its retracted position. Turn the knob to adjust the bass. Push the knob back into its retracted position.

CD (Compact Disc)

Push “CD” to switch from radio or cassette operation to compact disc operation. If the audio system is off, you can turn on the compact disc player by pushing “CD”. In both cases, a disc must already be loaded in the player.

When the audio is set into compact disc operation, the display shows the track number currently being played. Pushing “CD” changes the display to show the length of the current program being played so far. By pushing the button once again, the display returns to that of track number.

Dolby® B · C *

If you are listening to a tape that was recorded with Dolby® B or C Noise Reduction, push the button by the double–D symbol until the appropriate symbol appears on the display. To turn off Dolby ® push the button until the symbol disappears from the display.

The Dolby B NR mode reduces tape noise by about 10 dB. The Dolby C NR mode reduces tape noise by another 10 dB, or about 20 dB total. For best sound reproduction, select the same NR mode that was used to record the tape.

*: Dolby noise reduction manufactured under license from Dolby Laboratories Licensing Corporation. “DOLBY” and the double D symbol are trademarks of Dolby Laboratories Licensing Corporation.

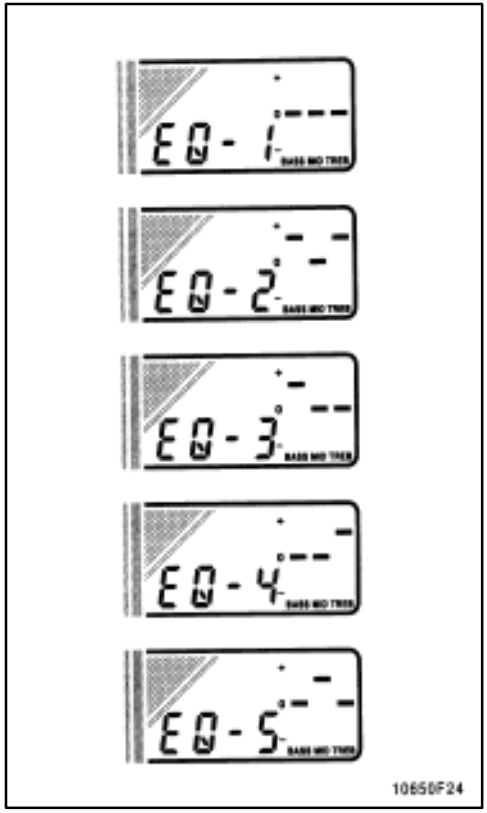

Five EQ settings

EQ (Equalizer)

Your audio system can store five different EQ settings in its memory so that you will not need to readjust it every time you listen to a different program.

Five common settings are stored in the system's memory when it is manufactured (see illustration).

To use a preset EQ setting: Push "EQ". The levers for the first setting and "EQ–1" will appear on the display. Push "EQ" until you reach the setting you want. The audio system will adjust the program you are hearing to the selected setting.

To change a preset EQ setting: Push "EQ" until the setting you want to change appears on the display. Adjust the bass, mid–range, and treble level using the "BASS", "MID/BAL", and "TREB/FADE."

To save an EQ setting: After you have changed a setting, push "EQ" until you hear a beep. This will replace the original factory setting with your new one.

To cancel one of the EQ settings you saved: With the setting on the display, push in and hold "EQ" until you have heard both the first "save" beep and a second beep that means the setting has been canceled. The original factory setting will appear on the display.

To cancel all of the changed EQ settings: Push and hold in"EQ" until you hear a third beep.

FADE

This knob lets you adjust the balance between the front and rear speakers.

Push "TREB/FADE" so that it pops out of its retracted position. Pull out the knob. Turn the knob to adjust the front/rear balance. Push the knob back into its retracted position.

MID (Mid–range)

This knob lets you adjust the mid–range level.

Push "MID/BAL" knob so that it pops out of its retracted position. Turn the knob to adjust the mid–range level. Push the knob back into its retracted position.

MTL (Metal) Display

If a metal or chrome equivalent cassette tape is put in the cassette player, the player will automatically adapt to it and "MTL" will appear on the display.

PROG (Program)

Push "PROG" to select the other side of a cassette tape. The display indicates which side is currently selected ("^" indicates top side, "v" indicates bottom side).

Auto–reverse feature: After the cassette player reaches the end of a tape side, it automatically reverses and begins to play the other side. This is true whether the cassette was playing or fast forwarding.

PWR/VOL (Power/Volume)

Push "PWR/VOL" to turn the audio system on and off. Turn "PWR/VOL" to adjust the volume.

RAND (Random)

The random feature allows you to listen to the tracks on a compact disc in random order.

When you push "RAND", "RAND" will appear on the display and the player will play the tracks in random order. Push the button again to turn off the random feature.

RM (Radio Monitor)

The radio monitor feature allows you to listen to the radio while a cassette is being rewound or fast forwarded.

Push “RM”. “RM” will appear on the display. Any time you are rewinding or fast forwarding a cassette tape, the radio will play the station that was set most recently. (You can not change the radio station unless you switch out of the cassette player function.)

Push “RM” again to turn off the RM feature.

RPT (Repeat)

The repeat feature automatically replays the current cassette or compact disc track.

Push “RPT” while the track is playing. “RPT” will appear on the display. When the track ends, it will automatically be rewound (cassette) and replayed. This process will be continued until you push the button again to turn off the repeat feature.

Cassettes—There must be at least 3 seconds of blank space between tracks in order for the repeat feature to work correctly.

Scan

Radio

You can either scan all the frequencies on a band or scan only the preset stations for that band.

To scan the preset stations: Quickly push and release “SCAN.” If you hear a beep, you held the button too long, and the radio will scan all the frequencies. The radio will tune in the next preset station up the band, stay there for a few seconds, and then move to the next preset station. To select a station, push “SCAN” a second time.

To scan all the frequencies: Push “SCAN” until you hear a beep. The radio will find the next station up the station band, stay there for a few seconds, and then scan again. To select a station, push “SCAN” a second time.

Cassette Player

The cassette player scan feature is similar to the radio scan feature and uses the same button.

Push “SCAN”. “SCAN” will appear on the display. The player will fast forward to the next cassette track, play it for 12 seconds, and then scan again. To select a track, push “SCAN” a second time. If the player reaches the end of one side of a cassette tape, it will continue scanning on the other side.

Compact disc player

The compact disc player scan feature is similar to the radio scan feature.

Push “SCAN”. “SCAN” will appear on the display. The compact disc player will play the next track for 10 seconds, then scan again. To select a track, push “SCAN” a second time. If the player reaches the end of the disc, it will continue scanning at track 1.

SKIP

The skip feature allows you to fast forward past long stretches of blank tape. This is especially useful at the end of cassettes.

Push “SKIP”. “SKIP” will appear on the display. The cassette player will keep track of how much blank space it plays. Any time it has played about 10 seconds of blank tape, it will automatically fast forward to the next track and begin to play.

Push the button a second time to turn off the skip feature.

ST (Stereo reception) display

Your radio automatically changes to stereo reception when a stereo broadcast is received. “ST” appears on the display. If the signal becomes weak, the radio reduces the amount of channel separation to prevent the weak signal from creating noise. If the signal becomes extremely weak, the radio switches from stereo to mono reception.

TAPE

Push “TAPE” to switch from radio or compact disc operation to cassette operation. If the audio system is off, you can turn on the cassette player by pushing “TAPE”. In both cases, a cassette must already be loaded in the player.

TREB (Treble)

This knob lets you adjust the treble level. Push “TREB/BASS” so that it pops out of its retracted position. Turn the knob to adjust the treble. Push the knob back into its retracted position.

TUNE

Tuning

Your Toyota has an electronic tuning radio (ETR).

Push and release the “∧” (up) or “v” (down) side of “TUNE” to step up or down the station band. (If you hear a beep, you held the button too long and the radio will go into the seek mode.)

Seeking

In the seek mode, the radio finds and plays the next station up or down the station band.

To seek a station, push and hold the “^” or “v” side of “TUNE” until you hear a beep. Do this again to find another station.

—Anti–theft system (type 1–3 and 2 only)

The anti–theft system prevents the audio system from working after it has been disconnected. To activate the system, you must set a three–digit security code. After the system is set, “SEC” will appear in the display each time the ignition is turned form “LOCK” or “ACC” or “ON”. Also, the anti–theft light flashes every few seconds while the ignition key is in the “LOCK” position.

You will need to know your security code to reactivate your radio after electrical service is performed on your vehicle.

Choose a security code that is easy to remember and keep a copy of it (not in your Toyota).

NOTICE

If you pushed any wrong buttons on the anti–theft system, the following messages will appear on the display.

“Err”—You have pushed wrong buttons.

"1–9"—Indicates the number of errors you have made. You may make up to nine errors, but no more!

"HELP"—The number of error you can make was exceeded. The audio sytem is completely inoperable. Contact you Toyota dealer.

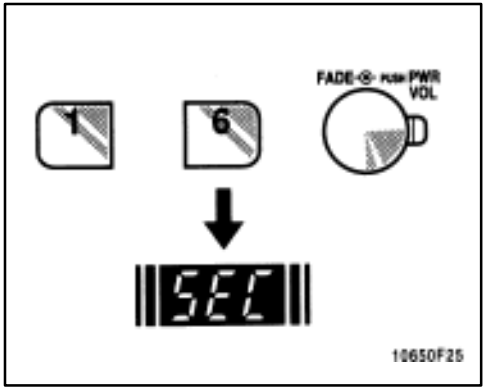

Setting a security code for the first time.

1. Turn off the audio system.

Turn the ignition key to "ACC".

Simultaneously push and hold in "1", "6", and "PWR/VOL" until "SEC" appears on the display.

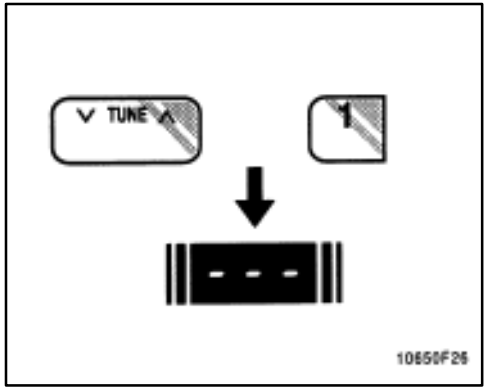

2. While you are holding in the "^" side of "TUNE", push "1".

The display will read "—".

On some modes, "▼" and "▲" will also turn on.

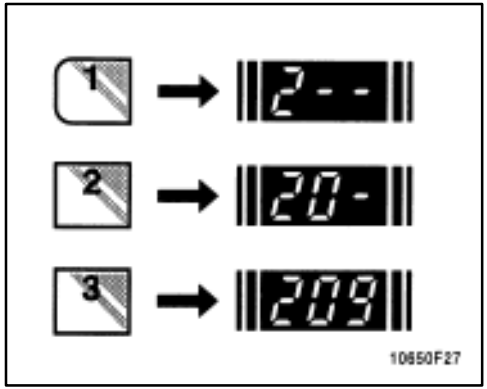

3. Input the three digit code.

You have 10 seconds to enter each digit.

For example, “209”:

To set the first digit: Push “1” until the digit you want appears on the display.

To set the second digit: Push “2” until the digit you want appears on the display.

To set the third digit: Push “3” until the digit you want appears on the display.

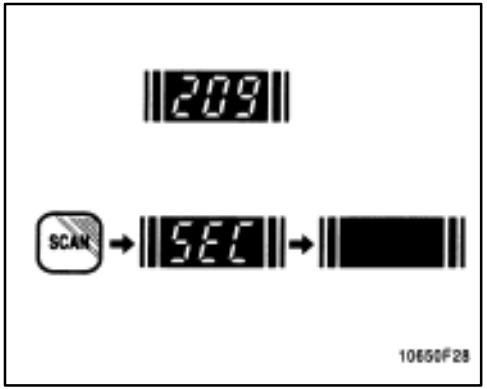

4. The three–digit code should be on the display.

Push and hold in “SCAN” until the display goes dark. (At first, “SEC” will appear on the display.)

If you pushed any wrong buttons, “Err” and the number of errors you have made will appear on the display before “SEC” does. Go back to step 2 and try again. If the display returns to “—“ while you are entering the code, go back to step 3.

To make sure the security code has been accepted, turn the ignition to “LOCK” and then back to “ACC.” “SEC” should appear on the display.

Choose a security code that is easy to remember and keep a copy of it (not in your Toyota).

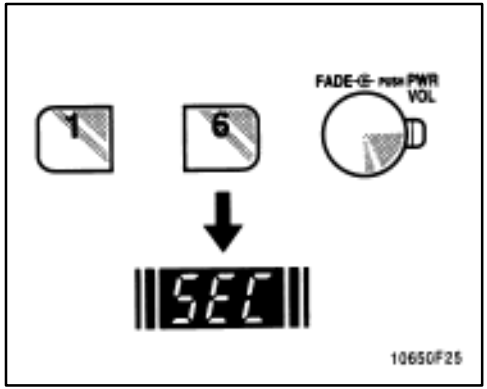

Changing the security code

1. Turn off the audio system.

Turn the ignition key to “ACC”.

Simultaneously push and hold in “1”, “6”, and “PWR/VOL” until “SEC” appears on the display.

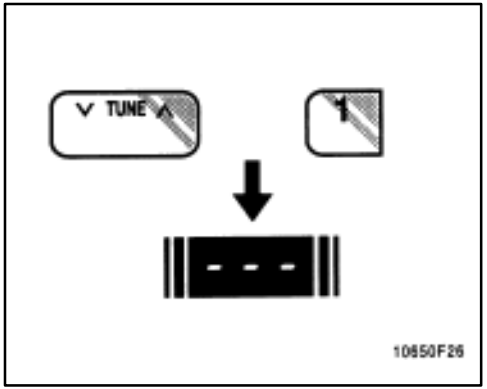

2. While you are holding in the “^” side of “TUNE” push “1”.

The display will read “—”.

On some models, “ ▼” and “▲” will also turn on.

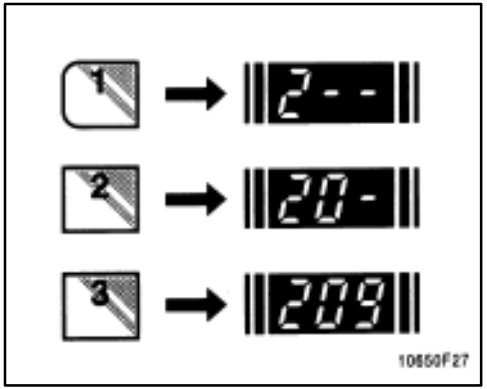

3. Input the existing three–digit code.

You have 10 seconds to enter each digit.

For example, “209”:

To set the first digit: Push “1” until the digit you want appears on the display.

To set the second digit: Push “2” until the digit you want appears on the display.

To set the third digit: Push “3” until the digit you want appears on the display.

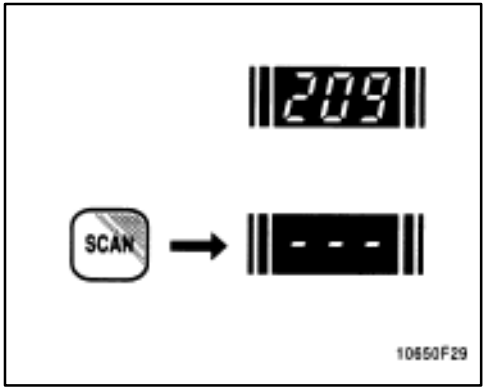

4. The three–digit code should be on the display.

Push “SCAN”.

5. Repeat steps 2 and 3, this time entering your new code. You can use digits “0” through “9”.

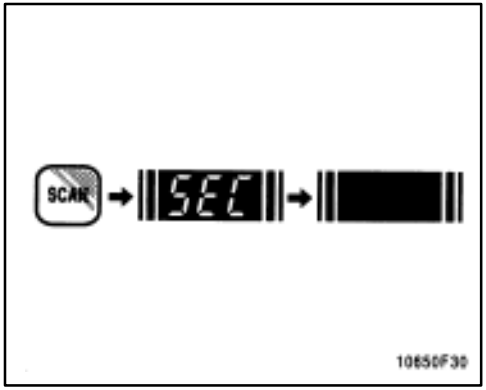

6. The new three–digit code should be on the display.

Push and hold in “SCAN” until the display goes dark. (At first, “SEC” will appear on the display.)

If you pushed any wrong buttons, “Err” and the number of errors you have made will appear on the display before “SEC” does. Go back to step 2 and try again. If the display returns to “—“ while you are entering the code, go back to step 3.

To make sure the security code has been accepted, turn the ignition to “LOCK” and then back to “ACC”. “SEC” should appear on the display.

NOTICE

A tenth error will activate the anti–theft system and “HELP” will appear on the display. The audio system will be completely inoperable. At this time, the anti–theft light also comes on. If this occurs, contact your Toyota dealer.

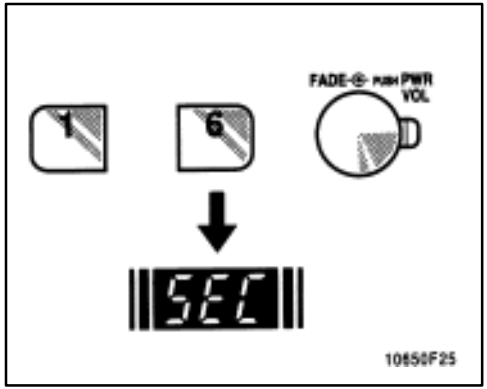

Cleaning the security code.

1. Turn off the audio system.

Turn the ignition key to “ACC”.

Simultaneously push and hold in “1”, “6”, and “PWR/VOL” until “SEC” appears on the display.

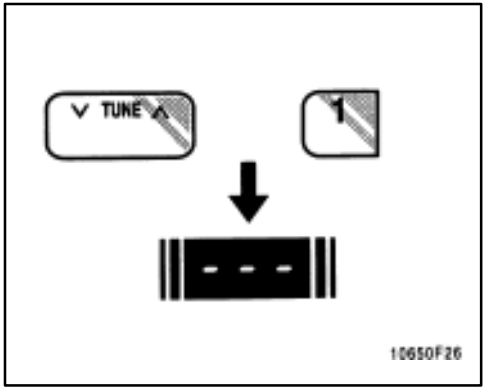

2. While you are holding in the “^” side of “TUNE”, push “1”.

The display will read “—“.

On some models, “▼” and “▲” will also turn on.

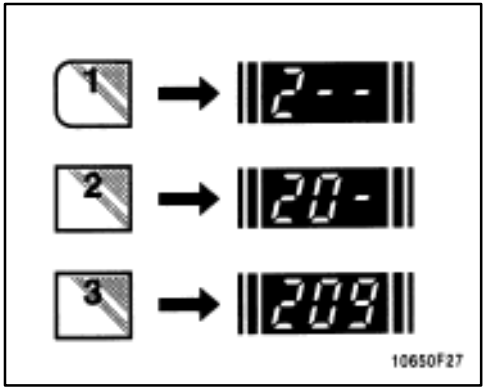

3. Input the existing three–digit code.

You have 10 seconds to enter each digit. For example, “209”:

To set the first digit: Push “1” until the digit you want appears on the display.

To set the second digit: Push “2” until the digit you want appears on the display.

To set the third digit: Push “3” until the digit you want appears on the display.

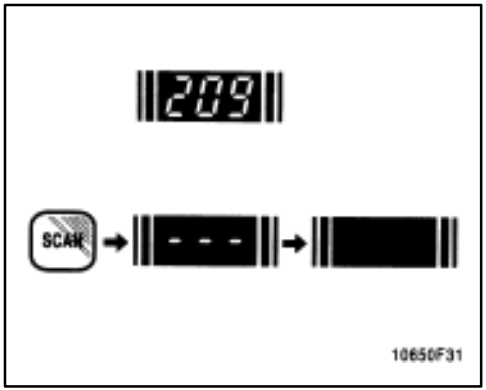

4. The three–digit code should be on the display.

Push “SCAN”.

The display will read “——“.

5. Wait for 10 seconds until the security system is deactivated and the display goes dark.

If you pushed any wrong buttons, “Err” and the number of errors you have made will appear on the display before “SEC” does. Go back to step 2 and try again. If the display returns to “–––“ while you are entering the code, go back to step 3.

NOTICE

A tenth error will activate the anti–theft system and “HELP” will appear on the display. The audio system will be completely inoperable. At this time, the anti–theft light also comes on. If this occurs, contact your Toyota dealer.

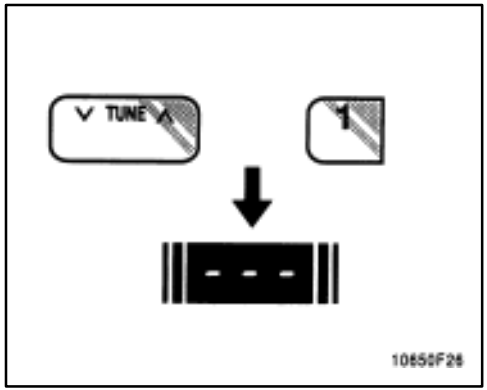

Reactivating a disabled audio system

1. Turn the ignition switch to “ACC”.
2. While you are holding in the “∧” side of “TUNE”, push “1”.

The dispay will read “——”.

On some models, “▼” and “▲” will also turn on.

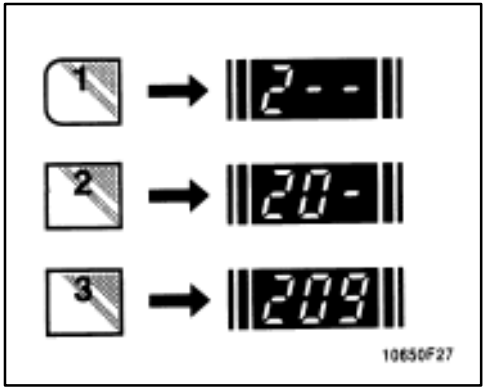

3. Input the existing three–digit code.

You have 10 seconds to enter each digit.

For example, “209”:

To set the first digit: Push “1” until the digit you want appears on the display.

To set the second digit: Push “2” until the digit you want appears on the display.

To set the third digit: Push “3” until the digit you want appears on the display.

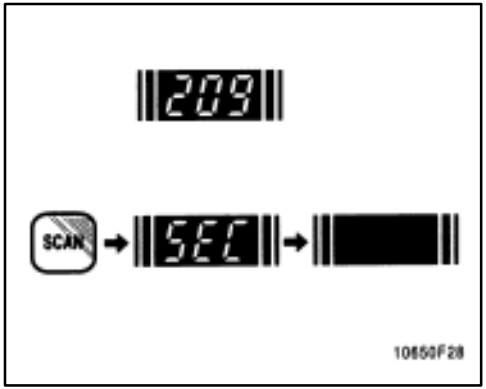

4. The three–digit code should be on the display.

Push and hold in “SCAN” until the display goes dark. (At first, “SEC” will appear on the display.)

If you pushed any wrong buttons, “Err” and the number of errors you have made will appear on the display before “SEC” does. Go back to step 2 and try again. If the display returns to “–––“ while you are entering the code, go back to step 3.

To make sure the security code has been accepted, turn the ignition to “LOCK” and then back to “ACC”. “SEC” should appear on the display.

NOTICE

A tenth error will activate the anti–theft system and “HELP” will appear on the display. The audio system will be completely inoperable. At this time, the anti–theft light also comes on. If this occurs, contact your Toyota dealer.

—Car audio system operating hints

NOTICE

To ensure the correct audio system operation:

Be careful not to spill beverages over the audio system.

Do not put anything other than a cassette tape or CD magazine into the cassette tape slot or CD changer.

ILLUMINATION CONTROL LOGIC

On some audio–units, when the instrument panel lights are on, the letters on operable buttons of the mode in current use light up together with the mode selection and eject buttons.

RADIO RECEPTION

Usually, a problem with radio reception does not mean there is a problem with your radio–it is just the normal result of conditions outside the vehicle.

For example, nearby buildings and terrain can interfere with FM reception. Power lines or telephone wires can interfere with AM signals. And of course, radio signals have a limited range, and the farther you are from a station, the weaker its signal will be. In addition, reception conditions change constantly as your vehicle moves.

Here are some common reception problems that probably do not indicate a problem with your radio:

FM

Fading and drifing stations—Generally, the effective range of FM is about 40 km (25 miles). Once outside this range, you may notice fading and drifting, which increase with the distance from the radio transmitter. They are often accompanied by distortion.

Multi–path—FM signals are reflective, making it possible for two signals to reach your antenna at the same time. If this happens, the signals will cancel each other out, causing a momentary flutter or loss of reception.

Static and fluttering—These occur when signals are blocked by buildings, trees, or other large objects. Increasing the bass level may reduce static and fluttering.

Station swapping—If the FM signal you are listening to is interrupted or weakened, and there is another strong station nearby on the FM band, your radio may tune in the second station until the original signal can be picked up again.

AM

Fading—AM broadcasts are reflected by the upper atmosphere–especially at night. These reflected signals can interfere with those received directly from the radio station, causing the radio station to sound alternately strong and weak.

Station interference—when a reflected signal and a signal received directly from a radio station are very nearly the same frequency, they can interfere with each other, making it difficult to hear the broadcast.

Static—AM is easily affected by external sources of electrical noise, such as high tension power lines, lightening, or electrical motors. This results in static.

CARING FOR YOUR CASSETTE PLAYER AND TAPES

For high performance from your cassette player and tapes:

Clean the tape head and other parts regularly.

A dirty tape head or tape path can decrease sound quality and tangle your cassette tapes. The easiest way to clean them is by using a cleaning tape. (A wet type is recommended.)

Use high–quality cassettes.

Low–quality cassette tapes can cause many problems, including poor sound, inconsistent playing speed, and constant auto–reversing. They can also get stuck or tangled in the cassette player.

Do not use a cassette if it has been damaged or tangled or if its label is peeling off.

Do not leave a cassette in the player if you are not listening to it, especially if it is hot outside.

Store cassettes in their cases and out of direct sunlight.

Avoid using cassettes with a total playing time longer than 100 minutes (50 minutes per side). The tape used in these cassettes is thin and could get stuck or tangled in the cassette player.

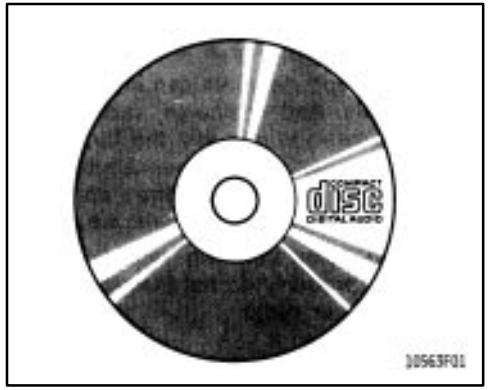

CARING FOR YOUR COMPACT DISC PLAYER AND DISCS

Use only compact discs labeled as shown.

Extremely high temperatures can keep your compact disc player from working. On hot days, use the air conditioning to cool the vehicle interior before you listen to a disc.

Bumpy roads or other vibrations may make your compact disc player skip.

If moisture gets into your compact disc player, you may not hear any sound even though your compact disc player appears to be working. Remove the disc from the player and wait until it dries.

Handle compact discs carefully, especially when you are inserting them. Hold them on the edge and do not bend them. Avoid getting fingerprints on them, particularly on the shiny side.

Dirt, scrapes, warping, pin holes, or other disc damage could cause the player to skip or to repeat a section of a track. (To see a pin hole, hold the disc up to the light.)

Remove discs from the compact disc player when you are not listening to them. Store them in their plastic cases away from moisture, heat, and direct sunlight.

To clean a compact disc: Wipe it with a soft, lint–free cloth that has been dampened with water. Wipe in a straight line from the center to the edge of the disc (not in circles). Dry it with another soft, lint–free cloth. Do not use a conventional record cleaner or anti–static device.

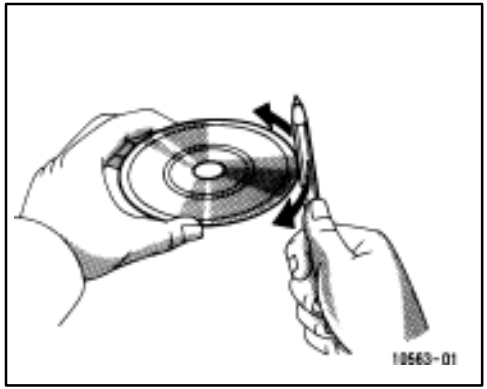

A new disc may have rough edges on its inner and outer perimeter. Remove the rough edges by pressing the side of a ball–point pen or pencil against the inner and outer perimeter of the disc as shown.

If you continue to play a disc with rough edges, flakes will fall on to the signal side of the disc and cause sound skipping or other problems.

! CAUTION

Compact disc players use invisible laser beam which could cause hazardous radiation exposure if directed outside the unit. Be sure to operate the player correctly as instructed.

Air conditioning system—
—Controls

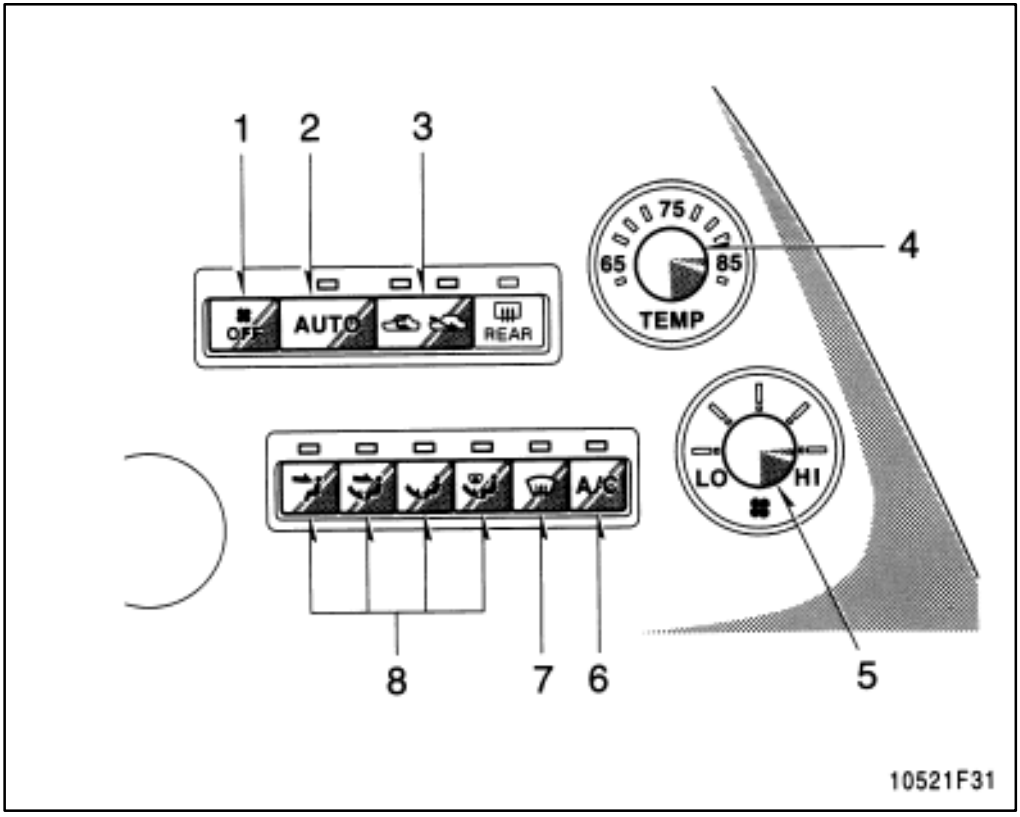

1. “OFF” Button
2. “AUTO” Button
3. Air Intake Selector
4. Temperature Selector
5. Fan Speed Selector
6. “A/C” Button
7. Windshield Air Flow Button
8. Air Flow Selector

“AUTO” button

For automatic operation of the air conditioning, press the “AUTO” button. An indicator light will illuminate to show that the automatic operation mode has been selected.

In the automatic operation mode, the air conditioning selects the most suitable air intake, fan speed and air flow according to the temperature.

You may use manual controls if you want to select your own settings.

To turn off the automatic operation, press the “OFF” button.

Fan speed selector

Turn the knob to adjust the fan speed—to the right to increase, to the left to decrease.

In automatic operation, you do not have to adjust the fan speed unless you desire another fan speed mode.

Temperature selector

Turn the knob to adjust the temperature—to the right to warm, to the left to cool.

“OFF” button

Push the button to turn off the air conditioning system.

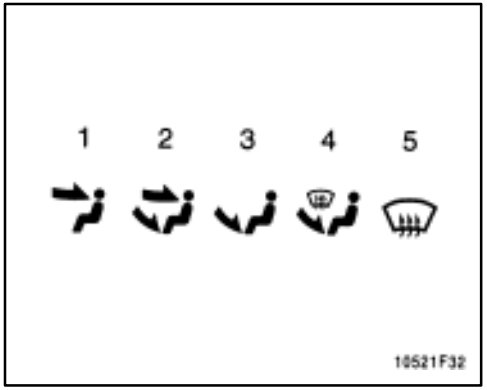

Air flow selector

Press the buttons to select the vents used for air flow.

In automatic operation, you do not have to select the air flow unless you desire another air flow mode.

1. **Panel—**Air flows mainly from the instrument panel vents.
2. **Bi–level—**Air flows from both the floor vents and the instrument panel vents.
3. **Floor—**Air flows mainly from the floor vents.
4. **Floor/Windshield—** Air flows mainly from the floor vents and windshield vents.
5. **Windshield—**Air flows mainly from the windshield vents.

Pressing the button once again returns the air flow mode to the last one used.

Pressing the windshield air flow button turns on the defroster–linked air conditioning. At this time, the “A/C” button indicator comes on regardless of whether or not the “A/C” button is pressed in. This is to clean up front view more quickly.

For details about air flow selector settings, see the illustration after “A/C” button.

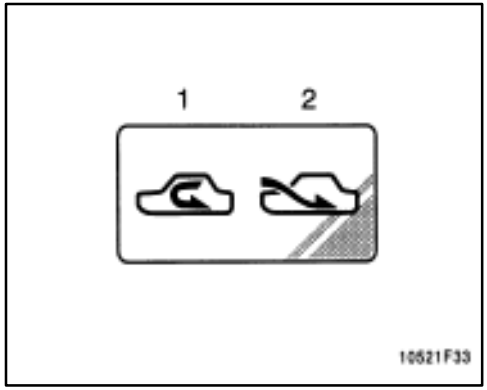

Air Intake selector

Press the button to select the air source.

1. **Recirculate—**Recirculates the air inside the vehicle.
2. **Fresh—**Draws outside air into the system.

In automatic operation, you do not have to select the air intake unless you desire another air intake mode.

“A/C” button

To turn on the air conditioning, press the “A/C” button. The “A/C” button indicator will come on. To turn the air conditioning off, press the button again.

If the “A/C” button indicator flashes, there is a problem in the air conditioning system and the air conditioning automatically shuts off. If this happens, take your vehicle to a Toyota dealer for service.

—Air flow selector settings

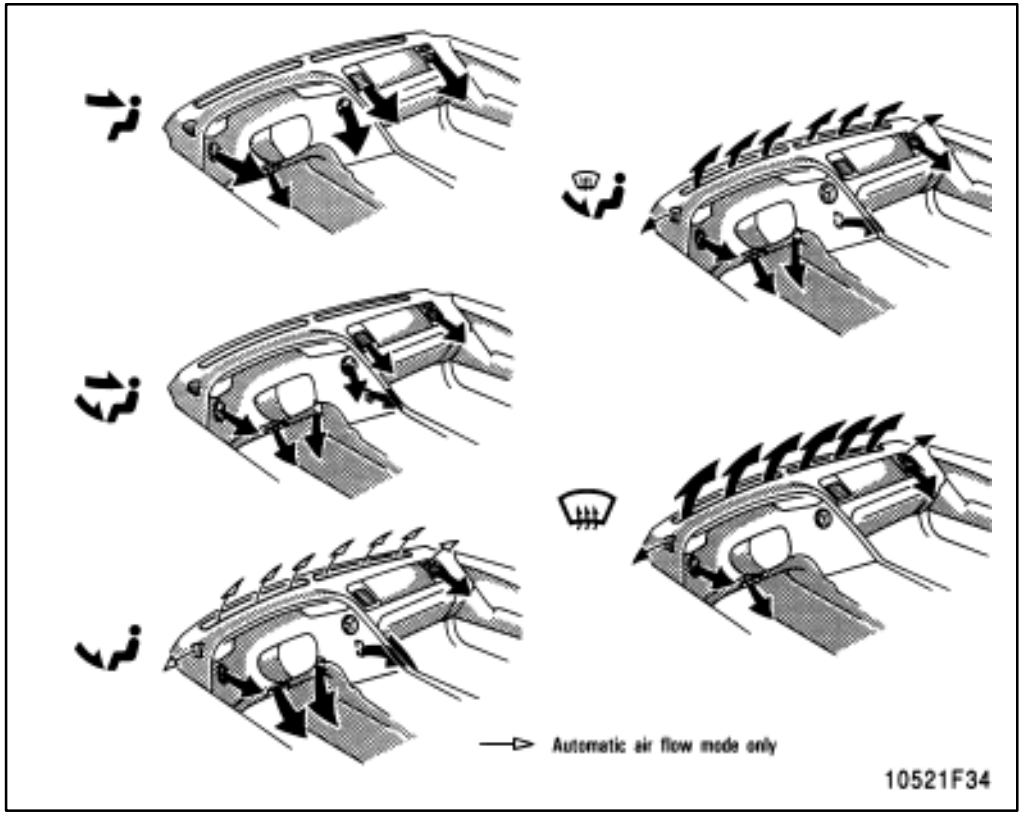

—Operating tips

- ® To cool off your Toyota after it has been parked in the hot sun, drive with the windows open for a few minutes. This vents the hot air, allowing the air conditioning to cool the interior more quickly.
- ® Make sure the air intake grilles in front of the windshield are not blocked (by leaves or snow, for example).
- ® On humid days, do not blow cold air on the windshield. The windshield could fog up because of the difference in air temperature on the inside and outside of the windshield.
- ® Keep the area under the front seats clear to allow air to circulate throughout the vehicle.
- ® On cold days, move the fan speed to “HI” for a minute to help clear the intake ducts of snow or moisture. This can reduce the amount of fogging on the windows.

Heating

For best results, set controls to:

For automatic operation—

Press in the "AUTO" button.
Temperature— To the desired temperature
Air conditioning—**OFF**

For manual operation—

Fan speed—To the desired fan speed
Temperature— To the desired temperature
Air intake—**FRESH** (outside air)
Air flow—**FLOOR**
Air conditioning—**OFF**

® For quick heating, select recirculated air for a few minutes. To keep the windows from fogging, select fresh after the vehicle interior has been warmed.

® Press the "A/C" button on for dehumidified heating.

® Choose floor/windshield air flow to heat the vehicle interior while defrosting the windshield.

Air conditioning

For best results, set controls to:

For automatic operation—

Press in the "AUTO" button.
Temperature— To the desired temperature
Air conditioning—**ON**

For manual operation—

Fan speed—To the desired fan speed
Temperature— To the desired temperature
Air intake—**FRESH** (outside air)
Air flow—**PANEL**
Air conditioning—**ON**

® For quick cooling, move the air intake selector to recirculate for a few minutes.

Ventilation

For best results, set controls to:

For automatic operation—

Press in the "AUTO" button.
Temperature— Towards low temperature
Air conditioning—**OFF**

For manual operation—

Fan speed—To the desired fan speed
Temperature— Towards low temperature
Air intake—**FRESH** (outside air)
Air flow—**PANEL**
Air conditioning—**OFF**

Defogging and defrosting

—The inside of the windshield

For best results, set controls to:

Temperature—	Towards high temperature to heat; low temperature to cool
Air intake—**FRESH** (outside air)	
Air flow—**WINDSHIELD**	

Pressing the windshield air flow button turns on the defroster–linked air conditioning. At this time, the “A/C” button indicator comes on regardless of whether or not the “A/C” button is pressed in. This is to clean up front view more quickly.

® On humid days, do not blow cold air on the windshield—the difference between the outside and inside temperatures could make the fogging worse.

—The outside of the windshield

For best results, set controls to:

Temperature—	Towards high temperature
Air intake—**FRESH** (outside air)	
Air flow—**WINDSHIELD**	

Pressing the windshield air flow button turns on the defroster–linked air conditioning. At this time, the “A/C” button indicator comes on regardless of whether or not the “A/C” button is pressed in. This is to clean up front view more quickly.

® To heat the vehicle interior while defrosting the windshield, choose floor/windshield air flow.

—Instrument panel vents

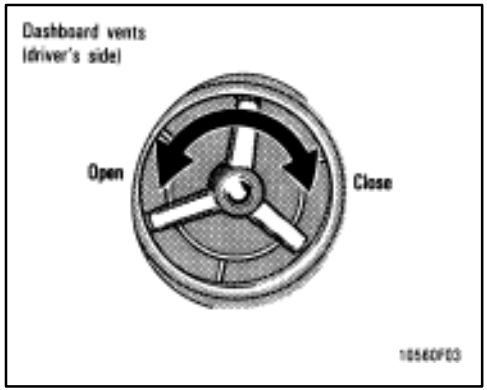

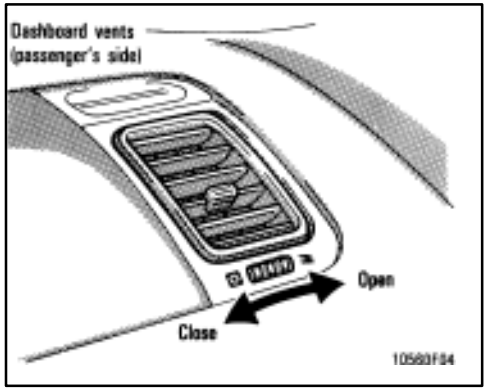

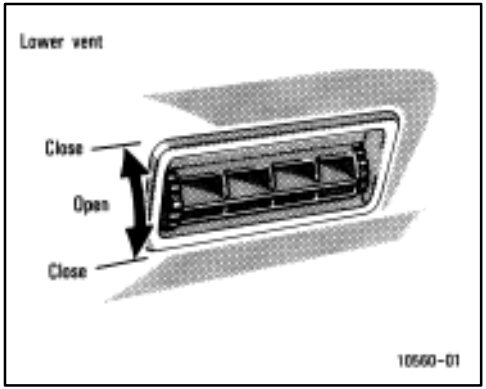

If air flow control is not satisfactory, check the instrument panel vents. The instrument panel vents may be opened or closed as shown.

Part 1

OPERATION OF INSTRUMENTS AND CONTROLS—

Chapter 1–8

Other equipment

- Ⓡ Clock
- Ⓡ Cigarette lighter and ashtray
- Ⓡ Glovebox
- Ⓡ Miscellany box
- Ⓡ Luggage cover
- Ⓡ Traction control system
- Ⓡ Floor mat

Clock

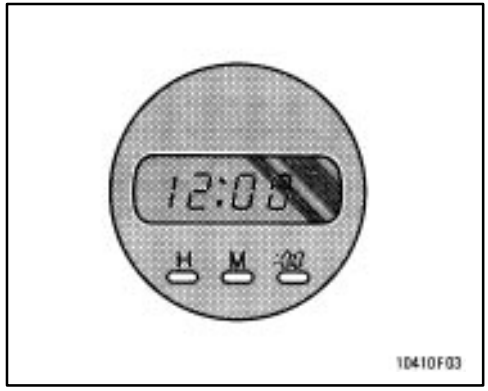

The digital clock indicates the time with the ignition key at the “ACC” or “ON” position. To reset the hour, depress the “H” button. To reset the minutes, depress the “M” button. To adjust the time to full hour, depress the “:00” button.

For example, if the “:00” button is depressed when the time is between 1:01—1:29, the time will change to 1:00. If the time is between 1:30—1:59, the time will change to 2:00.

When the instrument panel lights are turned on, the brightness of the time indication will be reduced.

Once the electrical power source has been disconnected from the clock, the time is automatically set to 1:00 (one o’clock).

Cigarette lighter and ashtray

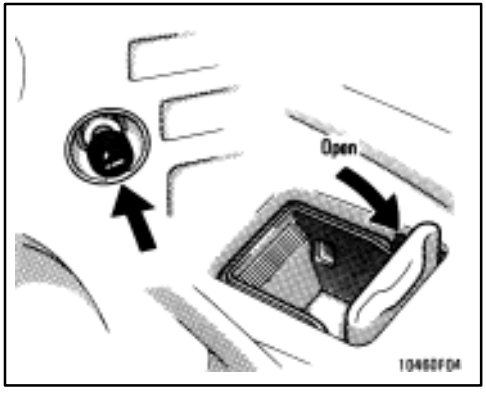

To operate the cigarette lighter, press it in. When it becomes heated, it automatically pops out ready for use.

If the engine is not running, the key must be in the “ACC” position.

Do not hold the cigarette lighter pressed in.

When finished with your cigarette, thoroughly extinguish it in the ashtray to prevent other cigarette butts from catching fire. After using the ashtray, close the ashtray cover completely.

To remove the ashtray, open the ashtray cover and pull it out.

Use a Toyota genuine cigarette lighter or equivalent for replacement.

CAUTION

To reduce the chance of injury in case of an accident or sudden stop while driving, always close the ashtray cover completely after using.

Glovebox

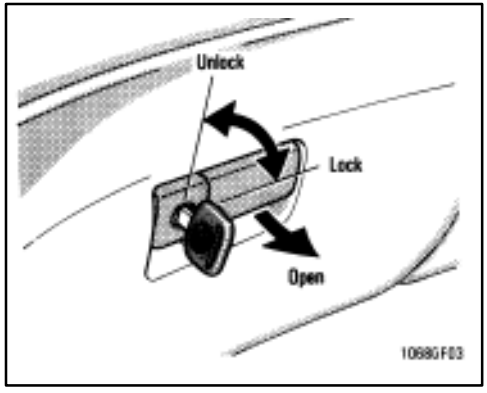

To open the glovebox door, pull the lever. To lock the glovebox door, insert the master key and turn it clockwise.

With the instrument panel lights on, the glovebox light will come on when the door is open.

CAUTION

To reduce the chance of injury in case of an accident or sudden stop, always keep the glovebox door closed while driving.

Miscellany box

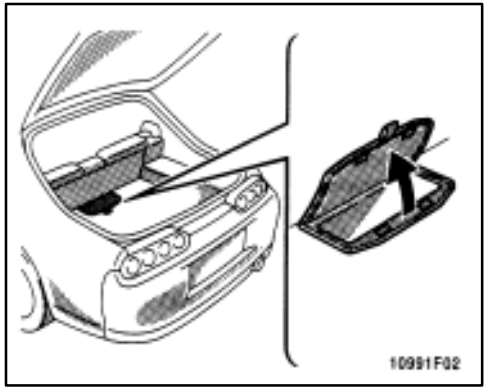

To open the box, pull up the strap.

Luggage cover

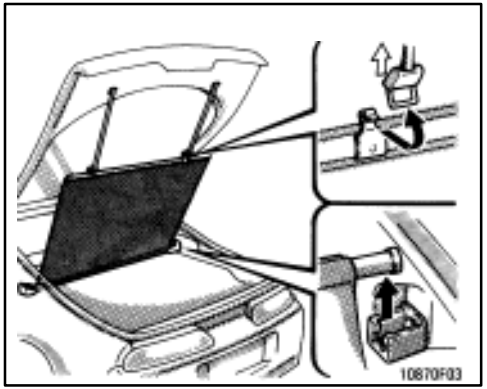

When you open the back door, the luggage cover tilt ups for easy access to the luggage area.

Traction control system

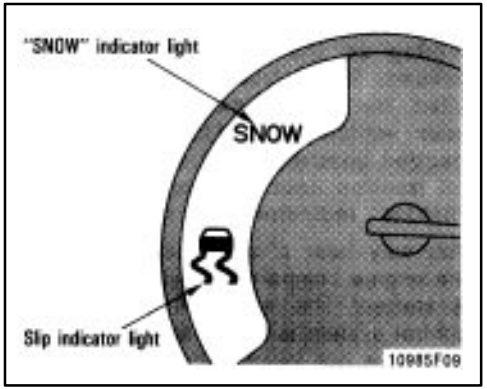

AUTOMATIC MODE

The traction control system automatically controls the spinning of the rear wheels which may occur when accelerating on slippery road surfaces, thus assisting driver control and driving power to the rear wheels. When you turn the ignition switch on, the traction control system always turns on automatically, and the slip indicator light and "SNOW" indicator light will come on. The indicator lights will go off after about 3 seconds.

Leave the system on during ordinary driving so that it can operate when needed. When traction control is applied, the slip indicator light blinks. If your vehicle still skids even though traction control is applied, more powerful traction control is applied and the "SNOW" indicator light comes on.

You may hear a slight clicking noise in the engine compartment when the engine is started. This means that the traction control system is in the self–check mode, and does not indicate malfunction. When the traction control system is operating, you may feel vibration of your vehicle, caused by operation of the brakes. This indicates the system is functioning properly.

When getting the vehicle out of mud or new snow, etc. the traction control system will operate to prevent the wheels from spinning. Even though the accelerator pedal is fully depressed, the engine speed will be restrained to a certain level.

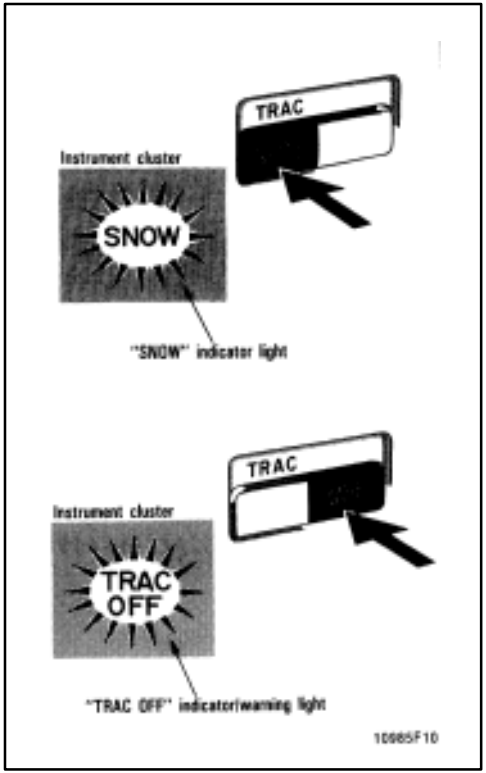

MANUAL SNOW OPERATION

You can select the snow mode by pushing the "SNOW" switch. The "SNOW" indicator light will come on.

To select the automatic mode, push the "OFF" switch. The "SNOW" indicator light will go off. If your vehicle still skids, the system automatically operates.

MANUAL TRACTION CONTROL OFF OPERATION

You can turn off the traction control system by pushing the "OFF" switch. The "TRAC OFF" indicator/warning light will come on. Pushing the "OFF switch a second time turns on the traction control system and the "TRAC OFF" indicator/warning light will go off.

If the "SNOW" indicator light is on, pushing the "OFF" switch once selects the automatic mode and pushing it a second time turns off the traction control system.

CAUTION

Under certain slippery road conditions, full stability of the vehicle and power to the rear wheels cannot be maintained, even though the traction control system is in operation. In situations where the road surface is covered with ice or snow, your vehicle should be fitted with snow tires or tire chains and driven at a more cautious pace.

Floor mat

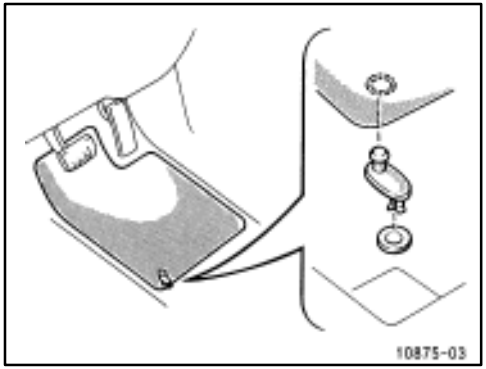

Use a floor mat of the correct size.

If the floor mat has a hole, then it is designed for use with a locking clip. Fix the floor mat and locking clip into the hole in the floor carpet.

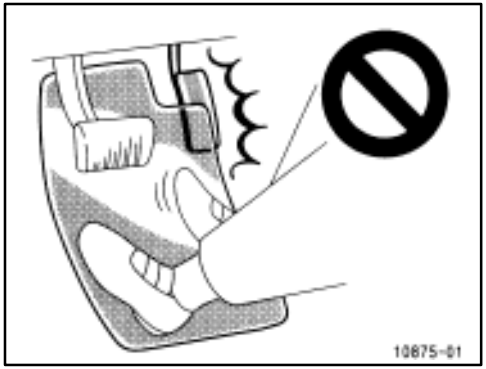

CAUTION

Make sure the floor mat is properly placed on the floor carpet. If the floor mat slips and interferes with the movement of the pedals during driving, it may cause an accident.

Part 2

INFORMATION BEFORE DRIVING YOUR TOYOTA

- Break–in period
- Fuel
- Operation in foreign countries
- Three–way catalytic converters
- Engine exhaust cautions
- Facts about engine oil consumption
- Brake system
- Brake pad wear limit indicators
- Luggage stowage precautions
- Limited–slip differential
- Your Toyota's identification
- Theft prevention labels
- Suspension and chassis
- Types of tires

Break-in period

Drive gently and avoid high speeds.

Your vehicle does not need an elaborate break–in. But following a few simple tips for the first 1600 km (1000 miles) can add to the future economy and long life of your vehicle:

- Do not drive over 88 km/h (55 mph).
- Do not run the engine over 4000 rpm. Maintain engine speed between 2000 and 4000 rpm.
- Avoid full–throttle starts.
- Try to avoid hard stops during the first 300 km (200 miles).
- Do not drive slowly with the manual transmission in a high gear.
- Do not drive for a long time at any single speed, either fast or slow.

Fuel

FUEL TYPE

Your new vehicle must use only unleaded gasoline.

To help prevent gas station mixups, your Toyota has a new smaller fuel tank opening. The special nozzle on pumps with unleaded fuel will fit it, but the larger standard nozzle on pumps with leaded gas will not.

NOTICE

Do not use leaded gasoline. Use of leaded gasoline will cause the three–way catalytic converter to lose its effectiveness and the emis–sion control system to function im–properly. Also, this can increase maintenance costs.

OCTANE NUMBER

Select premium unleaded gasoline with a Research Octane Number of 96 (Octane Rating 91) or higher for optimum engine performance. However, if such premium type cannot be obtained, you may temporarily use unleaded gasoline with an octane number as low as 91 (Octane Rating 87).

Use of unleaded fuel with an octane number or rating lower than stated above will cause persistent heavy knocking. If severe, this will lead to engine damage.

If your engine knocks...

If you detact heavy knocking even when using the recommended fuel, or if you hear steady knocking while holding a steady speed on level roads, consult your Toyota dealer.

However, now and then, you may notice light knocking for a short time while accelerating or driving up hills. This is no cause for concern.

GASOLINES CONTAINING DETERGENT ADDITIVES

Toyota recommends use of gasolines that contain detergent additives to avoid build–up of engine deposits.

For further details, ask your Toyota dealer or a local gasoline retailer..

GASOLINES CONTAINING MTBE

Gasolines that contain MTBE (Methyl Tertiary–Butyl Ether) are available in the market. If you use a gasoline mixed with MTBE, make certain that it does not contain more than 15% of MTBE.

If the use of gasolines containing MTBE causes poor driveability and/or poor fuel economy, you should discontinue the use of fuels containing MTBE.

GASOLINES CONTAINING ALCOHOL

If the use of gasohol in your Toyota, be sure that it is unleaded, has an octane rating no lower than 87 and does not contain more than 10% ethanol.

Gasohol is a mixture of gasoline and ethanol.

Toyota does not recommend the use of gasolines containing methanol. If you use gasoline containing methanol, use only gasoline meeting the requirements above and also containing less than 5% methanol with cosolvents and corrosion inhibitors for methanol.

NOTICE

- ***Do not use gasohol other than stated above. It will cause fuel system damage or vehicle performance problems.***
- ***If driveability problems are encountered (poor hot starting, vaporizing, engine knock, etc.), discontinue the use.***
- ***Take care not to spill gasohol during refueling. Gasohol may cause paint damage.***

FUEL TANK CAPACITY

70 L (18.5 gal., 15.4 Imp. gal)

Operation in foreign countries

If you plan to drive your Toyota in another country...

First, comply with the vehicle registration laws.

Second, confirm the availability of the correct fuel (unleaded and minimum octane number).

Three–way catalytic converters

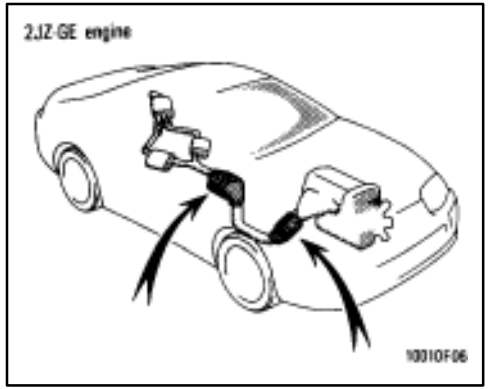

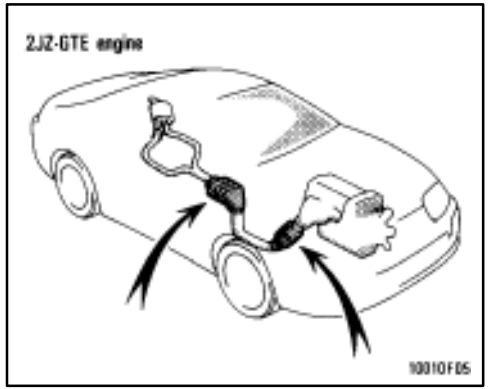

The three–way catalytic converter is an emission control device installed in the exhaust system.

Its purpose is to reduce pollutants in the exhaust gas.

⚠ CAUTION

®Keep people and combustible materials away from the exhaust pipe while the engine is running. The exhaust gas is very hot.

®Do not drive, idle or park your vehicle over anything that might burn easily such as grass, leaves, paper or rags.

NOTICE

A large amount of unburned gases flowing into the three–way catalytic converter may cause it to overheat and create a fire hazard. To prevent this and other damage, observe the following precautions:

◀Use only unleaded gasoline.

Engine Exhaust Cautions

- *Do not drive with an extremely low fuel level; running out of fuel could cause the engine to misfire, creating an excessive load on the three–way catalytic converter.*
- *Do not allow the engine to run at idle speed for more than 20 minutes.*
- *Avoid racing the engine.*
- *Do not push–start or pull–start your vehicle.*
- *Do not turn off the ignition while the vehicle is moving.*
- *Keep your engine in good running order. Malfunctions in the engine electrical system, electronic ignition system/distributor ignition system or fuel system could cause an extremely high three–way catalytic converter temperature.*
- *If the engine becomes difficult to start or stalls frequently, take your vehicle in for a check–up as soon as possible. Remember, your Toyota dealer knows your vehicle and its three–way catalytic converter system best.*

- *To ensure that the three–way catalytic converter and the entire emission control system operate properly, your vehicle must receive the periodic inspections required by the Toyota Maintenance Schedule. For scheduled maintenance information, refer to the separate "Owner's Manual Supplement/Maintenance Schedule".*

! CAUTION

- **Avoid inhaling the engine exhaust. It contains carbon monoxide, which is a colorless and odorless gas. It can cause unconsciousness or even death.**
- **Make sure the exhaust system has no holes or loose connections. The system should be checked from time to time. If you hit something, or notice a change in the sound of the exhaust, have the system checked immediately.**
- **Do not run the engine in a garage or enclosed area except for the time needed to drive the vehicle in or out. The exhaust gases cannot escape, making this a particularly dangerous situation.**
- **Do not remain for a long time in a parked vehicle with the engine running. If it is unavoidable, however, do so only in an unconfined area and adjust the heating or cooling system to force outside air into the vehicle.**

®Keep the back door closed while driving. An open or unsealed trunklid may cause exhaust gases to be drawn into the vehicle. If you must drive with the trunklid open to accommodate a large object, close the windows, open all the instrument panel vents and have the heating or cooling system deliver fresh air into the vehicle by turning the fan to high speed with the air intake control lever set at the OUTSIDE AIR position.

®To allow proper operation of your vehicle's ventilation system, keep the inlet grilles in front of the windshield clear of snow, leaves, or other obstructions.

®If you smell exhaust fumes in the vehicle, drive with the windows open and the back door closed. Have the cause immediately located and corrected.

Facts about engine oil consumption

FUNCTIONS OF ENGINE OIL

Engine oil has the primary functions of lubricating and cooling the inside of the engine, and plays a major role in maintaining the engine in proper working order.

ENGINE OIL CONSUMPTION

It is normal that an engine should consume some engine oil during normal engine operation. The causes of oil consumption in a normal engine are as follows.

® Oil is used to lubricate pistons, piston rings and cylinders. A thin film of oil is left on the cylinder wall when a piston moves downwards in the cylinder. High negative pressure generated when the vehicle is decelerating sucks some of this oil into the combustion chamber. This oil as well as some part of the oil film left on the cylinder wall is burned by the high temperature combustion gases during the combustion process.

® Oil is also used to lubricate the stems of the intake valves. Some of this oil is sucked into the combustion chamber together with the intake air and is burned along with the fuel. High temperature exhaust gases also burn the oil used to lubricate the exhaust valve stems.

The amount of engine oil consumed depends on the viscosity of the oil, the quality of the oil and the conditions the vehicle is driven under.

More oil is consumed by high–speed driving and frequent acceleration and deceleration.

A new engine consumes more oil, since its pistons, piston rings and cylinder walls have not become conditioned.

When judging the amount of oil consumption, note that the oil may become diluted and make it difficult to judge the true level accurately.

As an example, if a vehicle is used for repeated short trips, and consumes a normal amount of oil, the dipstick may not show any drop in the oil level at all, even after 1000 km (600 miles) or more. This is because the oil is gradually becoming diluted with the fuel or moisture, making it appear that the oil level has not changed.

The diluting ingredients evaporate out when the vehicle is then driven at high speeds, as on an expressway, making it appear that oil is excessively consumed after driving as high speeds.

IMPORTANCE OF ENGINE OIL LEVEL CHECK

One of the most important points in proper vehicle maintenance is to keep the engine oil at the optimum level so that oil function will not be impaired. Therefore, it is essential that the oil level be checked regularly. Toyota recommends that the oil level be checked every time you refuel the vehicle.

NOTICE

Failure to check the oil level regularly could lead to serious engine trouble due to insufficient oil.

For detailed information on the oil level check, see “Checking the engine oil level” in Chapter 7–2.

Brake system

TANDEM MASTER CYLINDER BRAKE SYSTEM

The tandem master cylinder brake system is a hydraulic system with two separate sub–systems. If either sub–system should fail, the other will still work. However, the pedal will be harder to press, and your stopping distance will be longer. Also, the brake system warning light may come on.

! CAUTION

Do not drive your vehicle with only a single brake system. Have your brakes fixed immediately.

BRAKE BOOSTER

The brake booster uses engine vacuum to power–assist the brakes. If the engine should quit while you are driving, you can bring the vehicle to a stop with normal pedal pressure. There is enough reserve vacuum for one or two stops – but no more!

! CAUTION

®Do not pump the brake pedal if the engine stalls. Each push on the pedal uses up your vacuum reserve.

®Even if the power assist is completely lost, the brakes will still work. But you will have to push the pedal hard—much harder than normal. And your braking distance will be longer.

ANTI–LOCK BRAKE SYSTEM

The anti–lock brake system is designed to automatically prevent lock–up of the wheels during sudden braking or braking on slippery road surfaces. This assists in providing directional stability and steering performance of the vehicle under these circumstances.

The anti–lock brake system becomes operative after the vehicle has accelerated to a speed in excess of approximately 10 km/h (6 mph). It stops operating when the vehicle decelerates to a speed below approximately 5 km/h (3 mph).

You may hear a sound in the engine compartment for a few seconds when the engine is started or just after the vehicle is started. This means that the anti–lock brake system is in the self check mode, and does not indicate a malfunction.

Effective way to press the “ABS” brake pedal:
When the anti–lock brake system function is in action, you may feel the brake pedal pulsating and hear a noise. In this situation, to let the anti–lock brake system work for you, just hold the brake pedal down more firmly. Do not pump the brake. This will result in reduced braking performance.

The brake pedal pulsation caused by the anti–lock brake system may indicate hazardous road surface conditions. Although the anti–lock brake system assists in providing vehicle control, it is still important to drive with all due care, because the anti–lock brake system cannot overcome the laws of physics that act on your vehicle:

- Braking capability is dependent on tire friction with the road surface.
- Even though the anti–lock brake system is operating, a driver cannot maintain full control on certain slippery road surfaces, when cornering at high speeds, or in violent maneuvers.
- Avoid high speeds on wet roads. The anti–lock brake system cannot eliminate the risk of hydroplaning and loss of tire friction.

Always maintain a safe distance from the vehicle in front of you. Compared with vehicles not fitted with an anti–lock brake system, your vehicle may require a longer stopping distance in the following cases:

- Driving on rough, gravel or snow–covered roads.
- Driving with tire chains installed.
- Driving on roads where the road surface is pitted or has other differences in surface height.

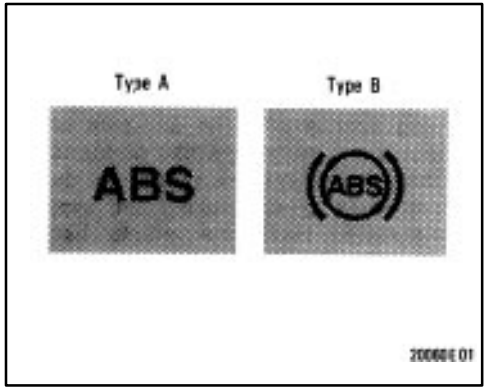

“ABS” warning light

This light comes on when the ignition key is turned to the “ON” position. After about 3 seconds, the light will go off.

If either of the following conditions occurs, this indicates a malfunction somewhere in the parts monitored by the warning light system. Contact your Toyota dealer as soon as possible to service the vehicle.

- The light does not come on as described above, or remains on.
- The light comes on while driving.

Even if the anti–lock brake system should fail, the brake system will still operate conventionally. However, when the ‘ABS’’ warning light is on (and the brake system warning light is off), the anti–lock brake system is not assisting brake performance so that the wheels can lock–up during sudden braking or braking on slippery road surfaces. Have your vehicle checked by your Toyota dealer as soon as possible

DRUM–IN–DISC TYPE PARKING BRAKE SYSTEM

Your vehicle has a drum–in–disc type parking brake system. This type brake system needs bedding–down of the brake shoes periodically or whenever the parking brake shoes and/or drums are replaced.

Have your Toyota dealer perform the bedding–down.

Brake pad wear limit indicators

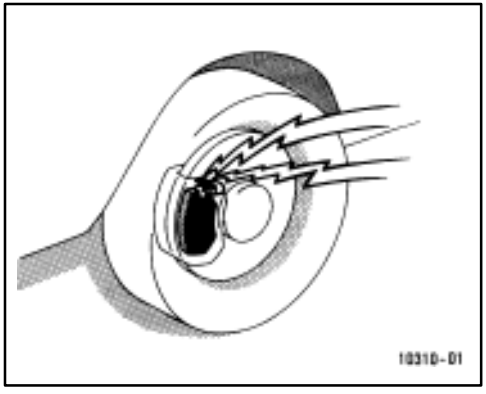

The brake pas wear limit indicators on your disc brakes give a warning noise when the brake pads are worn to where replacement is required.

If you hear a squealing or scraping noise while driving, have the brake pads checked and replaced by your Toyota dealer as soon as possible. Expensive rotor damage can result if the pads are not replaced when necessary.

Luggage storage precautions

When stowing luggage or cargo in or on the vehicle, observe the following:

- Put luggage or cargo in the luggage compartment when at all possible. Be sure all items are secured in place.
- Be careful to keep the vehicle balanced. Locating the weight as far forward as possible helps maintain balance.
- For better fuel economy, do not carry unneeded weight.

! CAUTION

To prevent luggage or packages from sliding forward during braking, do not stack anything in the luggage compartment higher than the seatbacks. Keep luggage or packages low, as close to the floor as possible.

Never allow anyone to ride in the luggage compartment. It is not designed for passengers. They should ride in their seats with their seat belts properly fastened. Otherwise, they are much more likely suffer serious bodily injury, in the event of sudden braking or a collision.

®**Do not place anything on the flattened seat, or it may slide forward during braking.**

®**Do not drive with objects left on top of the instrument panel. They may interfere with the driver's field of view. Or they may move during sharp vehicle acceleration or turning, and impair the driver's control of the vehicle. In an accident they may injure the vehicle occupants.**

NOTICE

◀***Do not load the vehicle beyond the vehicle capacity weight specified in Part 8.***

◀***If using a roof luggage carrier on sport roofs, avoid prolonged driving on rough roads with heavy items on the roof luggage carrier.***

Limited–slip differential

Some Toyotas are equipped with a limited–slip differential. If one rear wheel begins to spin, the limited–slip differential is designed to aid traction by automatically transmitting driving force to the other rear wheel. If you are not sure whether your vehicle is equipped with one, you can ask your Toyota dealer.

! CAUTION

Do not start or run the engine while your vehicle is supported by a jack. The vehicle could be driven off the jack and could pose a danger or result in serious injury.

NOTICE

Use only a spare tire of the same size, construction and load capacity as the original tires on your Toyota because damage to the limited–slip differential could possibly occur with another type.

Your Toyota's identification

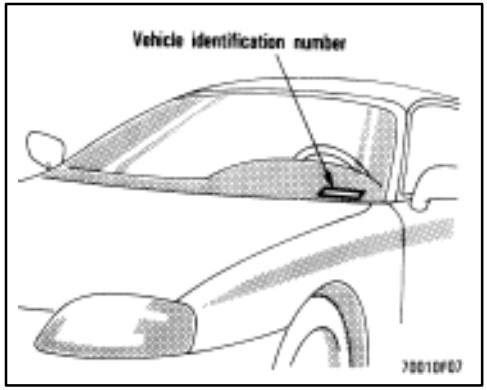

The vehicle identification number (VIN) is the legal identifier for your vehicle. This number is on the left top of the instrument panel, and can be seen through the windshield from outside.

The vehicle identification number (VIN) is also on the Certification Label.

This is the primary identification number for your Toyota. It is used in registering the ownership of your vehicle.

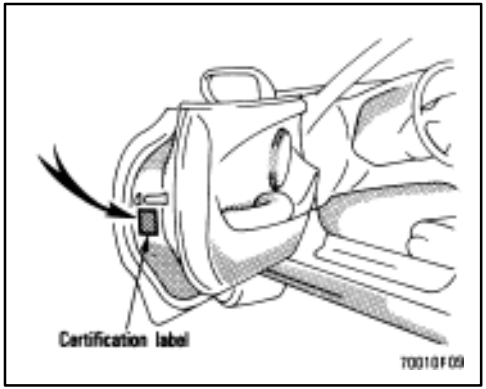

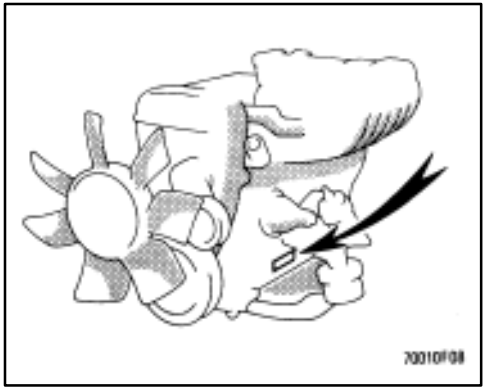

The engine number is stamped on the engine block as shown

Theft prevention labels (except for Canada)

Your new vehicle carries theft prevention labels which are approximately 56 mm (2.20 in.) by 16 mm (0.63 in.).

The purpose of these labels is to reduce the incidence of vehicle thefts by facilitating the tracing and recovery of parts from stolen vehicles. The label is designed so that once it is applied to a surface, any attempt to remove it will result in destroying the integrity of the label. Transferring these labels intact from one part to another, will be impossible.

NOTICE

You should not attempt to remove the theft prevention labels as it may violate certain state or federal laws.

Suspension and chassis

CAUTION

Do not modify the suspension/chassis with lift kits, spacers, springs, etc. It can cause dangerous handling characteristics resulting in loss of control.

Types of tires

Determine what kind of tires your vehicle is originally equipped with

1. Summer tires.

Summer tires are high–speed capability tires best suited to highway driving under dry conditions.

Since summer tires do not have the same traction performance as snow tires, summer tires are inadequate for driving on snow–covered or icy roads. For driving on snow–covered or icy roads, we recommend using snow tires. If installing snow tires, be sure to replace all four tires.

2. All season tires

All season tires are designed to provide better traction in snow and to be adequate for driving in most winter conditions, as well as for use all year round.

All season tires, however, do not have adequate traction performance compared with snow tires in heavy or loose snow. Also, all season tires fall short in acceleration and handling performance compared with summer tires in highway driving.

CAUTION

®Do not mix summer and all season tires on your vehicle as this can cause dangerous handling characteristics, resulting in loss of control.

®Do not use tires other than the manufacturer's designated tires, and do not mix tires or wheels of the sizes different from the original.

Part 3

STARTING AND DRIVING

- Ⓡ Before starting the engine
- Ⓡ How to start the engine
- Ⓡ Precautions for turning off engine with turbocharger
- Ⓡ Tips for driving in various conditions
- Ⓡ Winter driving tips
- Ⓡ Trailer towing
- Ⓡ How to save fuel and make your vehicle last longer, too

Before starting the engine

1. Check the area around the vehicle before entering it.
2. Adjust seat position, seatback angle and steering wheel angle.
3. Adjust inside and outside rear view mirrors.
4. Lock all doors.
5. Fasten seat belts.

How to start the engine— (a) Before cranking

1. Apply the parking brake firmly.
2. Turn off unnecessary lights and accessories.
3. **Manual transmission:** Press the clutch pedal to the floor and shift the transmission into neutral. Hold the clutch pedal to the floor until the engine is started. A starter safety device will prevent the starter from operating if the clutch pedal is not fully depressed.

   Automatic transmission: Put the selector lever in “P”. If you need to restart the engine while the vehicle is moving, put the selector lever in “N”. A starter safety device will prevent the starter from operating if the selector lever is in any drive position.
4. **Automatic transmission only:** Depress the brake pedal and hold it to the floor until driving off.

(b) Starting the engine

Before starting the engine, be sure to follow the instructions in “(a) Before cranking”.

Normal starting procedure

The multiport fuel injection system/sequential multiport fuel injection system in your engine automatically controls the proper air–fuel mixture for starting. You can start a cold or hot engine as follows:

1. With your foot off the accelerator pedal, crank the engine by turning the key to “START”. Release it when the engine starts.
2. After the engine runs for about 10 seconds, you are ready to drive.

If the weather is below freezing, let the engine warm up for a few minutes before driving.

If the engine stalls...

Simply restart it, using the correct procedure given in normal starting.

If the engine will not start–

See “If your vehicle will not start” in Part 4.

NOTICE

◀Do not crank for more than 30 seconds at a time. This may overheat the starter and wiring systems.

◀Do not race a cold engine.

◀If the engine becomes difficult to start or stalls frequently, have the engine checked immediately.

Precautions for turning off an engine with turbocharger (2JZ–GTE engine)

After high–speed or extended driving, etc., required a heavy engine load, the engine should be allowed to idle, as shown in the chart, before turning it off.

Driving condition and required idling time
Normal city driving Idling time—Not necessary
High–speed driving About 80 km/h (50 mph) Idling time—About 20 seconds About 100 km/h (63 mph) Idling time—About 1 minute
Steep mountain slopes or continued driving above 100 km/h (63 mph) Idling time—About 2 minutes

NOTICE

Never turn the engine off immediately after a heavy load. This may cause severe engine damage.

Tips for driving in various conditions

- Always slow down in gusty cross-winds. This will allow you much better control
- Drive slowly onto curbs and, if possible, at a right angle. Avoid driving onto high, sharp–edged objects and other road hazards. Failure to do so can lead to severe tire damage resulting in tire bursts.
- When parking on a hill, turn the front wheels until they touch the curb so that the vehicle will not roll. Apply the parking brake, and place the transmission in “P” (automatic) or in first or reverse (manual). If necessary, block the wheels.
- Washing your vehicle or driving through deep water may get the brakes wet. To see whether they are wet, check that there is no traffic near you, and then press the pedal lightly. If you do not feel a normal braking force, the brakes are probably wet. To dry them, drive the vehicle cautiously while lightly pressing the brake pedal with the parking brake pulled. If they still do not work safely, pull to the side of the road and call a Toyota dealer for assistance.

CAUTION

- Before driving off, make sure that the parking brake if fully released and the parking brake reminder light is off.
- Do not leave your vehicle unattended while the engine is running.
- Do not rest your foot on the brake pedal while driving. It can cause dangerous overheating, needless wear, and poor fuel economy.
- To drive down a long or steep hill, reduce your speed and downshift. Remember, if you ride the brakes excessively, they may overheat and not work properly.
- Be careful when accelerating, upshifting, downshifting or braking on a slippery surface. Sudden acceleration or engine braking, could cause the vehicle to spin or skid.

- Do not drive in excess of the speed limit. Even if the legal speed limit permits it, do not drive over 140 km/h (85 mph) unless your vehicle has high–speed capability tires. Driving over 140 km/h (85 mph) may result in tire failure, loss of control and possible injury. Be sure to consult a tire dealer to determine whether the tires on your vehicle are high–speed capability tires or not before driving at such speeds.
- Do not continue normal driving when the brakes are wet. If they are wet, your vehicle will require a longer stopping distance, and it may pull to one side when the brakes are applied. Also, the parking brake will not hold the vehicle securely.

Winter driving tips

Make sure you have ethylene–glycol antifreeze in the radiator.

NOTICE

Do not use alcohol type antifreeze.

Check the condition of the battery and cables.

Cold temperatures reduce the capacity of any battery, so it must be in top shape to provide enough power for winter starting. Chapter 7–3 tells you how to visually inspect the battery. Your Toyota dealer and most service stations will be pleased to check the level of charge.

Make sure the engine oil viscosity is suitable for the cold weather.

See Chapter 7–2 for recommended viscosity. Leaving a heavy summer oil in your vehicle during winter months may cause harder starting. If you are not sure about which oil to use, call your Toyota dealer–he will be pleased to help.

Keep the door locks from freezing.

Squirt lock de–icer or glycerine into the locks to keep them from freezing. To open a frozen lock, try heating the key before inserting it.

Use a washer fluid containing an antifreeze solution.

This product is available at your Toyota dealer and most auto parts stores. Follow the manufacturer's directions for how much to mix with water.

NOTICE

Do not use engine antifreeze or any other substitute as washer fluid because it may damage your vehicle's paint.

Do not use your parking brake when there is a possibility it could freeze.

When parking, put the transmission into "P" (automatic) or into first or reverse (manual) and block the rear wheels. Do not use the parking brake, or snow or water accumulated in and around the parking brake mechanism may freeze, making it hard to release.

Keep ice and snow from accumulating under the fenders.

Ice and snow built up under your fenders can make steering difficult. During bad winter driving, stop and check under the fenders occasionally.

Depending on where you are driving, we recommend you carry some emergency equipment.

Some of the things you might put in the vehicle are tire chains, window scraper, bag of sand or salt, flares, small shovel, jumper cables, etc.

Trailer towing

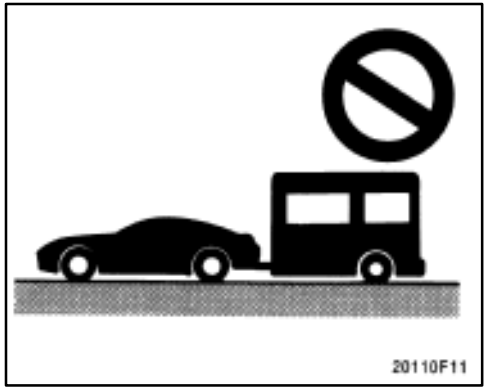

Toyota does not recommend towing a trailer with your Supra. It is not designed for trailer towing.

How to save fuel and make your vehicle last longer, too

Getting more kilometers/mileage from a liter/gallon of fuel is easy–just take it easy. It will help make your vehicle last longer, too. Here are some specific tips on how to save money on both fuel and repairs:

- **Keep your tires inflated at the correct pressure.** Underinflation causes tire wear and wastes fuel. See Chapter 7–2 for instructions.
- **Do not carry unneeded weight in your vehicle.** Excess weight puts a heavier load on the engine, causing greater fuel consumption.
- **Avoid lengthy warm–up idling.** Once the engine is running smoothly, begin driving—but gently. Remember, however, that on cold winter days this may take a little longer.
- **Accelerate slowly and smoothly.** Avoid jackrabbit starts. Get into high gear as quickly as possible.
- **Avoid long engine idling.** If you have a long wait and you are not in traffic, it is better to turn off the engine and start again later.
- **Avoid engine lug or overrevving.** Use a gear position suitable for the road on which you are travelling.
- **Avoid continuous speeding up and slowing down.** Stop–and–go driving wastes fuel.
- **Avoid unnecessary stopping and braking.** Maintain a steady pace. Try to time the traffic signals so you only need to stop as little as possible or take advantage of through streets to avoid traffic lights. Keep a proper distance from other vehicles to avoid sudden braking. This will also reduce wear on your brakes.
- **Avoid heavy traffic or traffic jams whenever possible.**
- **Do not rest your foot on the clutch or brake pedal.** This causes needless wear, overheating and poor fuel economy.
- **Maintain a moderate speed on highways.** The faster you drive, the greater the fuel consumption. By reducing your speed, you will cut down on fuel consumption.
- **Keep the front wheels in proper alignment.** Avoid hitting the curb and slow down on rough roads. Improper alignment not only causes faster tire wear but also puts an extra load on the engine, which, in turn, wastes fuel.

- **Keep the bottom of your vehicle free from mud, etc.** This not only lessens weight but also helps prevent corrosion.
- **Keep your vehicle tuned–up and in top shape.** A dirty air cleaner, improper valve clearance, dirty plugs, dirty oil and grease, brakes not adjusted, etc. all lower engine performance and contribute to poor fuel economy. For longer life of all parts and lower operating costs, keep all maintenance work on schedule, and if you often drive under severe conditions, see that your vehicle receives more frequent maintenance (For scheduled maintenance information, please refer to the separate "Owner's Manual Supplement/Maintenance Schedule").

CAUTION

Never turn off the engine to coast down hills. Your power steering and brake booster will not function without the engine running. Also, the emission control system operates properly only when the engine is running.

Part 4

IN CASE OF AN EMERGENCY

- If your vehicle will not start
- If your engine stalls while driving
- If your vehicle overheats
- If you have a flat tire
- If your vehicle needs to be towed
- If you cannot shift automatic transmission selector lever
- If you lose your keys

If your vehicle will not start—

(a) Simple checks

Before making these checks, make sure you have followed the correct starting procedure given in “How to start the engine” in Part 3 and that you have sufficient fuel.

If the engine is not turning over or is turning over too slowly—

1. Check that the battery terminals are tight and clean.
2. If the battery terminals are O.K., switch on the interior light.
3. If the light is out, dim or goes out when the starter is cranked, the battery is discharged. You may try jump starting. See “(c) Jump starting” for further instructions.

If the light is O.K., but the engine still will not start, it needs adjustment or repair. Call a Toyota dealer or qualified repair shop.

NOTICE

Do not pull— or push–start the vehicle. It may damage the vehicle or cause a collision when the engine starts. Also the three–way catalytic converter may overheat and become a fire hazard.

If the engine turns over at its normal speed but will not start—

1. 2JZ–GE engine only—Check that all the push–on connectors are tight. (For example, connections at the spark plugs, ignition coil and/or distributor)
2. If the connectors are O.K., the engine may be flooded because of repeated cranking. See “(b) Starting a flooded engine” for further instructions.

(b) Starting a flooded engine

If the engine will not start, your engine may be flooded because of repeated cranking.

If this happens, turn the key to “START” with the accelerator pedal held down. Keep the key and accelerator pedal so for 15 seconds and release them. Then try starting the engine with your foot off the accelerator pedal.

If the engine does not start after 15 seconds of cranking, release the key, wait a few minutes and try again.

If the engine still will not start, it needs adjustment or repair. Call a Toyota dealer or qualified repair shop for assistance.

NOTICE

Do not crank for more than 30 seconds at a time. This may overheat the starter and wiring systems.

(c) Jump starting

To avoid serious personal injury and damage to your vehicle which might result from battery explosion, acid burns, electrical burns, or damaged electronic components, these instructions must be followed precisely.

If you are unsure about how to follow this procedure, we strongly recommend that you seek the help of a competent mechanic or towing service.

! CAUTION

®Batteries contain sulfuric acid which is poisonous and corrosive. Wear protective safety glasses when jump starting, and avoid spilling acid on your skin, clothing, or vehicle.

®If you should accidentally get acid on yourself or in you eyes, remove any contaminated clothing and flush the affected area with water for at least 15 minutes. Then get immediate medical attention. If possible, continue to apply water with a sponge or cloth while en route to the medical office.

®The gas normally produced by a battery will explode if a flame or spark is brought near. Use only standardized cables and do not smoke or light a match while jump starting.

NOTICE

The battery used for boosting must be 12 V. Do not jump start unless you are sure that the booster battery is correct.

JUMP STARTING PROCEDURE

1. If the booster battery is installed in another vehicle, make sure the vehicles are not touching. Turn off all unnecessary lights and accessories.
2. If required, remove all the vent plugs from the booster and discharged batteries. Lay a cloth over the open vents on the batteries. (This helps reduce the explosion hazard, personal injuries and burns.)
3. If the engine in the vehicle with the booster battery is not running, start it and let it run for a few minutes. During jump starting, run the engine at about 2000 rpm with the accelerator pedal lightly depressed.

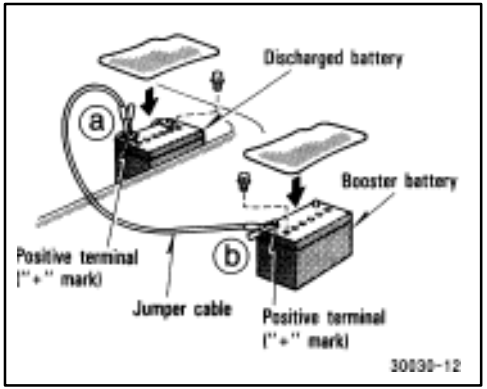

4. Make the cable connection in the order a, b, c, d.

a. Connect the clamp of the positive (red) jumper cable to the positive (+) terminal on the discharged battery.

b. Connect the clamp at the other end of the positive (red) jumper cable to the positive (+) terminal on the booster battery.

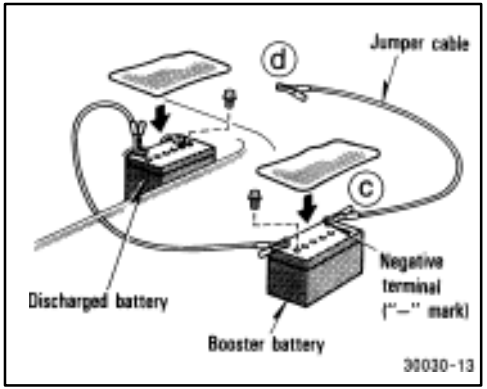

c. Connect the clamp of the negative (black) jumper cable to the negative (–) terminal on the booster battery.

d. Connect the clamp at the other end of the negative (black) jumper cable to a solid, stationary, unpainted, metallic point of the vehicle with the discharged battery.

The recommended connecting points are shown in the following illustrations:

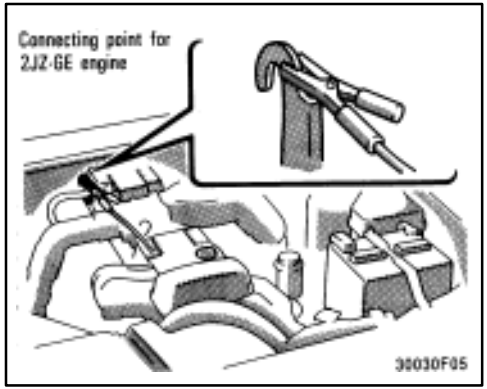

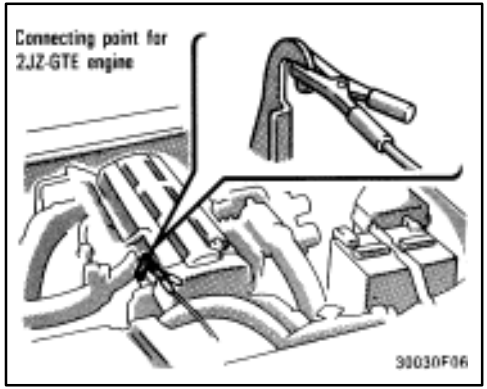

Do not connect the cable to or near any part that moves when the engine is cranked.

CAUTION

When making the connections, to avoid serious injury, do not lean over the battery or accidentally let the jumper cables or clamps touch anything except the correct battery terminals or the ground.

5. Start your engine in the normal way. After starting, run it at about 2000 rpm for several minutes with the accelerator pedal lightly depressed.
6. Carefully disconnect the cables in the exact reverse order: the negative cable and then the positive cable.
7. Carefully dispose of the battery cover cloths—they may now contain sulfuric acid.
8. If removed, replace all the battery vent plugs.

If the cause of your battery discharging is not apparent (for example, lights left on), you should have it checked.

If your engine stalls while driving

If your engine stalls while driving…

1. Reduce your speed gradually, keeping a straight line. Move cautiously off the road to a safe place.
2. Turn on your emergency flashers.
3. Try starting the engine again.

If the engine will not start, see “If your vehicle will not start”.

CAUTION

If the engine is not running, the power assist for the brakes and steering will not work so steering and braking will be much harder than usual.

If your vehicle overheats

If your engine coolant temperature gauge indicates overheating, if you experience a loss of power, or if you hear a loud knocking or pinging noise, the engine has probably overheated. You should follow this procedure…

1. Pull safely off the road, stop the vehicle and turn on your emergency flashers. Put the transmission in “P” (automatic) or neutral (manual) and apply the parking brake. Turn off the air conditioning if it is being used.
2. I coolant or steam is boiling out of the radiator or reservoir, stop the engine. Wait until the steam subsides before opening the hood. If there is no coolant boiling over or steam, leave the engine running.

CAUTION

To help avoid personal injury, keep the hood closed until there is no steam. Escaping steam or coolant is a sign of very high pressure.

3. Visually check to see if the engine drive belt (fan belt) is broken or loose. Look for obvious coolant leaks from the radioator, hoses, and under the vehicle. However, note that water draining from the air conditioning is normal if it has been used.

CAUTION

When the engine is running, keep hands and clothing away from the moving fan and engine drive belts.

4. If the engine drive belt is broken or the coolant is leaking, stop the engine immediately. Call a Toyota dealer for assistance.
5. If the engine drive belt is O.K. and there are no obvious leaks, you may help the engine cool down more quickly by running it at about 1500 rpm for a few minutes with the accelerator pedal lightly depressed.
6. Check the coolant reservoir. If it is dry, add coolant to the reservoir while the engine is running. Fill it about half full.

CAUTION

Do not attempt to remove the radiator cap when the engine and radiator are hot. Serious injury could result from scalding hot fluid and steam blown out under pressure.

7. After the engine coolant temperature has cooled to normal, again check the coolant level in the reservoir. If necessary, bring it up to half full again. Serious coolant loss indicates a leak in the system. You should have it checked as soon as possible at your Toyota dealer.

If you have a flat tire—

1. Reduce your speed gradually, keeping a straight line. Move cautiously off the road to a safe place well away from the traffic. Avoid stopping on the center divider of a highway. Park on a level spot with firm ground.
2. Stop the engine and turn on your emergency flashers.
3. Firmly set the parking brake and put the transmission in “P” (automatic) or reverse (manual).
4. Have everyone get out of the vehicle on the side away from traffic.
5. Read the following instructions thoroughly.

! CAUTION

When jacking, be sure to observe the following to reduce the possibility of personal injury:

- **Follow jacking instructions.**
- **Use a jack only for lifting your vehicle during wheel changing.**
- **Never get beneathe the vehicle when supported by a jack**
- **Do not start or run the engine while your vehicle is supported by a jack.**

NOTICE

Do not continue driving with a deflated tire. Driving even a short distance can damage a tire beyond repair.

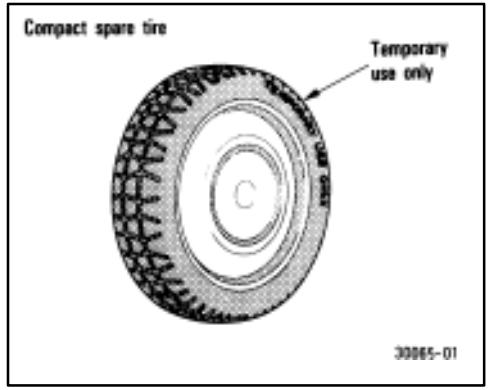

Compact spare tire

The compact spare tire is designed for temporary emergency use only.

The compact spare tire is identified by the distinctive wheel design and color and special wording “TEMPORARY USE ONLY” molded into the side wall of the tire.

The standard tire should be repaired and replaced as soon as possible.

To keep the compact spare tire noticeable, do not hide the wheel by a wheel cover or such.

The compact spare tire saves space in your luggage compartment, and its lighter weight helps to improve fuel economy and permits easier installation in case of a flat tire.

The compact spare tire can be used many times, if necessary. It has tread life of up to 4800 km (3000 miles) depending on road conditions and your driving habits. When tread wear indicators appear on the tire, replace the tire.

See also the tire section in Chapter 7–2 for details on the tread wear indicators and other service information.

CAUTION

®The compact spare tire was designed especially for your Toyota. Do not use it on any other vehicle.
®Do not exceed 80 km/h (50 mph) when driving with the compact spare tire.

NOTICE

Your ground clearance is reduced when the compact spare tire is installed so avoid driving over obstacles and drive slowl on rough, unpaved roads and speed bumps. Also, do not attempt to go through an automatic car wash as the vehicle may get cauthe, resulting in damage.

—Required tools and spare tire

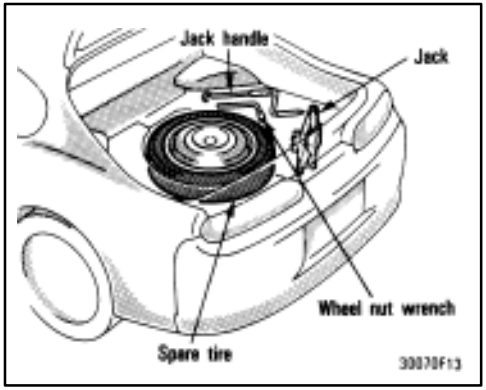

1. Get the wheel nut wrench, jack, jack handle and spare tire.

To prepare yourself for an emergency, you should familiarize yourself with the use of the jack, each of the tools and their storage locations.

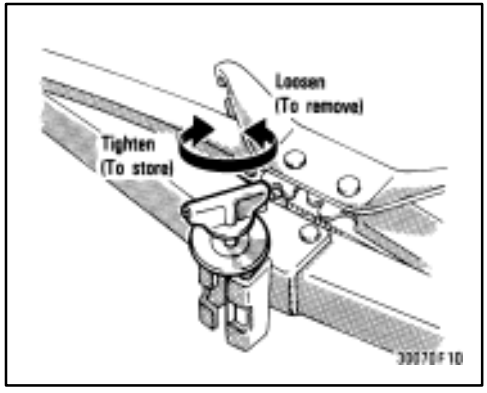

To remove the jack, loosen the bolt and remove it.

When storing the jack, secure it by following removal step in reverse order to prevent it from flying forward during a collision or sudden braking.

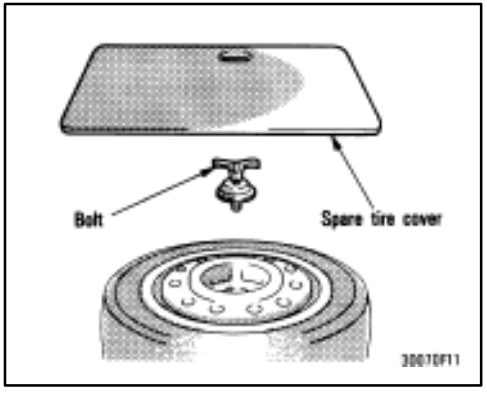

To remove the spare tire:

1. Remove the spare tire cover.
2. Loosen the bolt and remove it.

When storing the spare tire, put it in place with the outer side of the wheel facing up. Then secure the tire by repeating the above removal steps in reverse order to prevent it from flying forward during a collision or sudden braking.

—Blocking the wheel

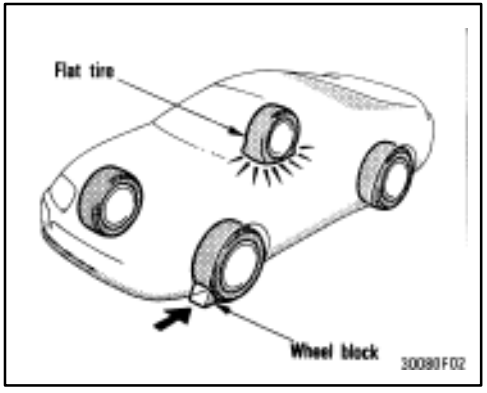

2. Block the wheel diagnoally opposite the flat tire to keep the vehicle from rolling when it is jacked up.

When blocking the wheel, place a wheel block from the front for the front wheels or from the rear for the rear wheels.

—Removing wheel ornament

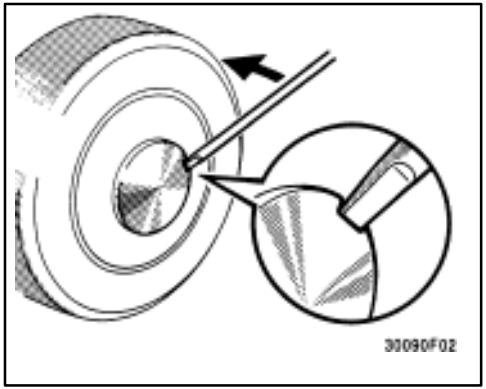

3. Remove the wheel ornament.

Pry off the wheel ornament, using the beveled end of the wheel nut wrench as shown.

! CAUTION

Do not try to pull the ornament by hand. Take due care in handling the ornament to avoid unexpected personal injury.

—Loosening wheel nuts

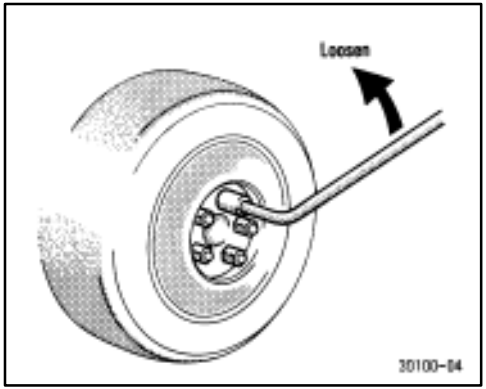

4. Loosen all the wheel nuts.

Always loosen the wheel nuts before raising the vehicle.

The nuts turn counterclockwise to loosen. To get maximum leverage, fit the wrench to the nut so that the handle is on the right side, as shown above. Grab the wrench near the end of the handle and pull up on the handle. Be careful that the wrench does not slip off the nut.

Do not remove the nuts yet—just unscrew them about one–half turn.

—Positioning the jack

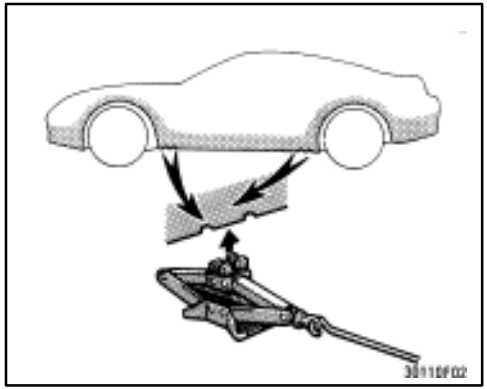

5. Position the jack at the correct jack points as shown

Make sure the jack is positioned on a level and solid place.

—Raising your vehicle

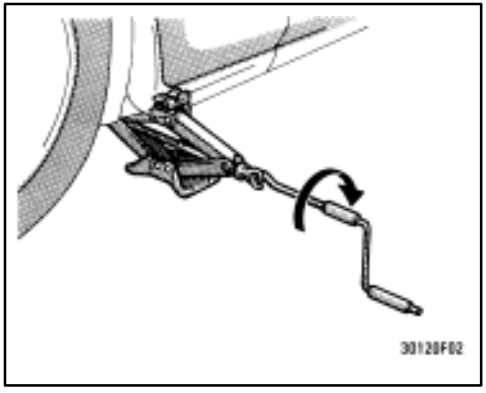

6. After making sure that no one is in the vehicle, raise it high enough so that the spare tire can be installed.

Remember you will need more ground clearance when putting in the spare tire than when removing the flat tire.

To raise the vehicle, insert the jack handle into the jack (it is a loose fit) and turn it clockwise. As the jack touches the vehicle and begins to lift, double–check that it is properly positioned.

! CAUTION

Never get under the vehicle when the vehicle is supported by the jack alone.

—Changing wheels

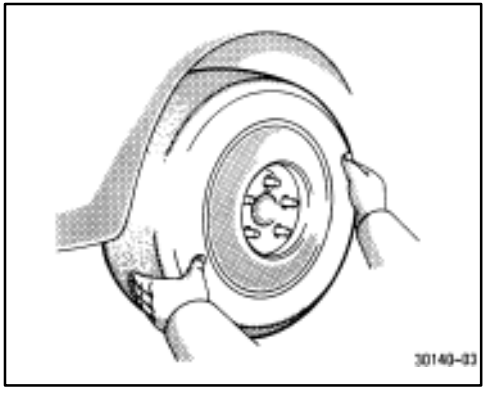

7. Remove the wheel nuts and change tires.

Lift the flat tire straight off and put it aside.

Roll the spare wheel into position and align the holes in the wheel with the bolts. Then lift up the wheel and get at least the top bolt started through its hole. Wiggle the tire and press it back over the other bolts.



Before putting on wheels, remove any corrosion on the mounting surfaces with a wire brush or such. Installation of wheels without good metal–to–metal contact at the mounting surface can cause wheel nuts to loosen and eventually cause a wheel to come off while driving. Therefore after the first 1600 km (1000 miles), check to see that the wheel nuts are tight.

—Reinstalling wheel nuts

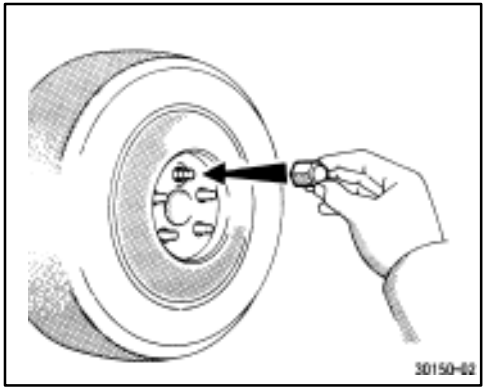

8. Reinstall all the wheel nuts finger tight.

Reinstall the wheel nuts and tighten them as much as you can by hand. Press back on the tire back and see if you can tighten them more.

—Lowering your vehicle

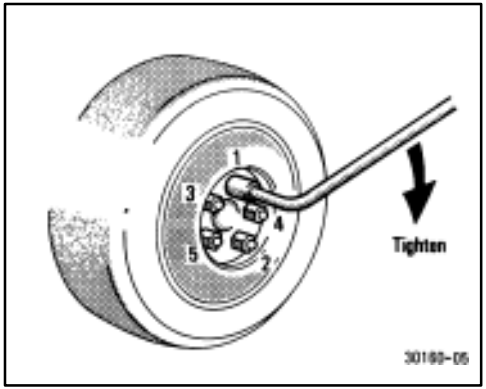

9. Lower the vehicle completely and tighten the wheel nuts.

Turn the jack handle counterclockwise to lower the vehicle.

Use only the wheel nut wrench to tighten the nuts. Do not use other tools or any additional leverage other than your hands, such as a hammer, pipe or your foot. Make sure the wrench is securely engaged over the nut.

Tighten each nut a little a time in the order shown. Repeat the process until all the nuts are tight.

—Reinstalling wheel ornament

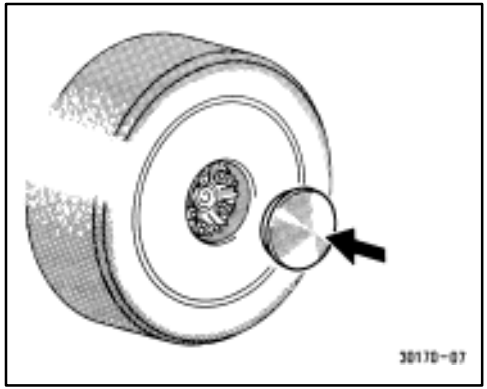

10. Reinstall the wheel ornament.

Put the wheel ornament into position and then tap it firmly with the side or heal of your hand to snap it into place.

! CAUTION

Take due care in handling the ornament to avoid unexpected personal injury.

—After changing wheels

11. Check the air pressure of the replaced tire.

Adjust the air pressure to the specification designated in Part 8. If the pressure is lower, drive slowly to the nearest service station and fill to the correct pressure.

Do not forget to reinstall the tire inflation valve cap as dirt and moisture could get into the valve core and possibly cause air leakage. If the cap is missing, have a new one put on as soon as possible.

12. Restow all the tools, jack and flat tire securely.

As soon as possible after changing wheels, tighten the wheel nuts to the torque specified in Part 8 with a torque wrench, have a technician repair the flat tire and replace the spare tire with it.

CAUTION

Before driving, make sure all the tools, jack and flat tire are securely in place in their storage location to reduce the possibility of personal injury during a collision or sudden braking.

If your vehicle needs to be towed—

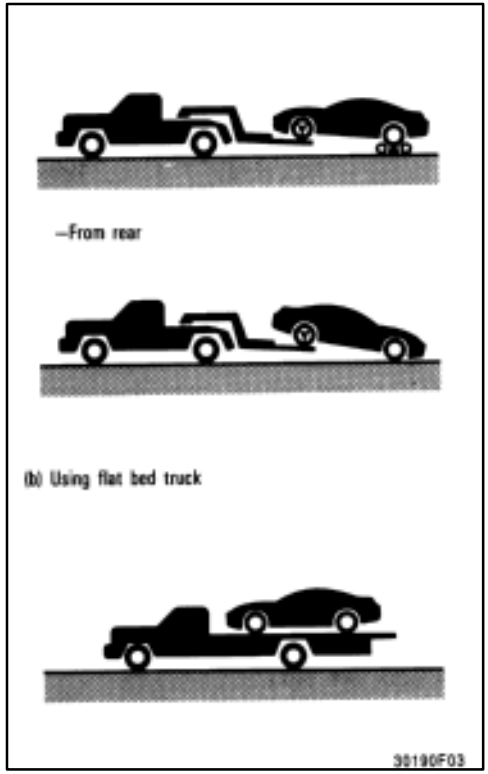

If towing is necessary, we recommend you to have it done by your Toyota dealer or a commercial tow truck service. In consultation with them, have your vehicle towed using either (a) or (b).

Only when you cannot receive a towing service from a Toyota dealer or commercial tow truck service, tow your vehicle carefully in accordance with the instructions given in "—Emergency towing" in this part.

Proper equipment will help ensure that your vehicle is not damaged while being towed. Commercial operators are generally aware of the state/provincial and local laws pertaining to towing.

Your vehicle can be damaged if it is towed incorrectly. Although most operators know the correct procedure, it is possible to make a mistake. To avoid damage to your vehicle, make sure the following few precautions are observed. If necessary, show this page to the tow truck driver.

TOWING PRECAUTIONS:

Use a safety chain system for all towing, and abide by the state/provincial and local laws. The wheels and axle on the ground must be in good condition. If they are damaged, use a towing dolly.

(a) Towing with wheel lift type truck

From front—

® Manual transmission:
We recommend using a towing dolly under the front wheels. If you do not use a towing dolly, place the ignition key in the “ACC” position and put the transmission in neutral.

® Automatic transmission:
Use a towing dolly under the front wheels.

NOTICE

Never tow a vehicle with an automatic transmission from the rear with the front wheels on the ground, as this may cause serious damage to the transmission.

From rear—Place the ignition key in the “ACC” position.

NOTICE

◀When lifting wheels, take care to ensure adequate ground clearance for towing at the opposite end of the raised vehicle. Otherwise, the bumper and/or underbody of the towed vehicle will be damaged during towing.

◀Do not tow with the key removed or in the “LOCK” position, as the steering lock mechanism is not strong enough to hold the front wheels straight while towing.

(b) Using flat bed truck

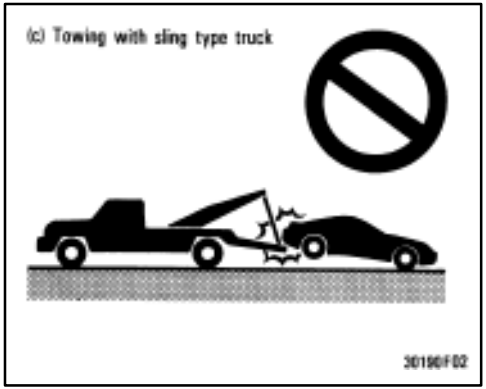

(c) Towing with sling type truck

NOTICE

Do not tow with sling type truck, either from the front or rear. This may cause body damage.

—Emergency towing

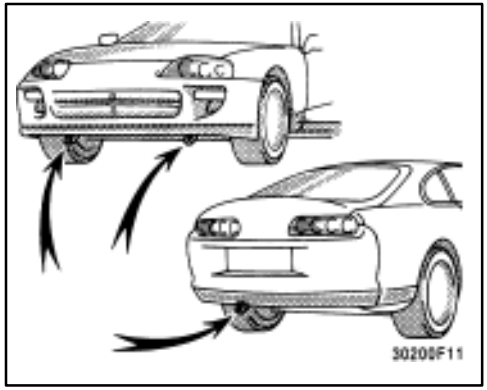

If towing is necessary, we recommend you to have it done by your Toyota dealer or a commercial tow truck service.

If towing service is not available in an emergency, your vehicle may be temporarily towed by a cable or chain secured to either emergency towing eyelet under the vehicle. Use extreme caution when towing vehicle.

A driver must be in the vehicle to steer it and operate the brakes.

Towing in this manner may be done only on hard–surfaced roads for a short distance and at low speeds. Also, the wheels, axles, drive train, steering and brakes must all be in good condition.

! CAUTION

Use extreme caution when towing vehicles. Avoid sudden starts or erratic driving maneuvers which would place excessive stress on the emergency towing eyelet and towing cable or chain. The eyelet and towing cable or chain may break and cause serious injury or damage.

NOTICE

Use only a cable or chain specifically intended for use in towing vehicles. Securely fasten the cable or chain to the towing eyelet provided.

Before towing, release the parking brake and put the transmission in neutral (manual) or “N” (automatic). The key must be in “ACC” (engine off) or “ON” (engine running).

! CAUTION

If the engine is not running, the power assist for the brakes and steering will not work so steering and braking will be much harder than usual.

If you cannot shift automatic transmission selector lever

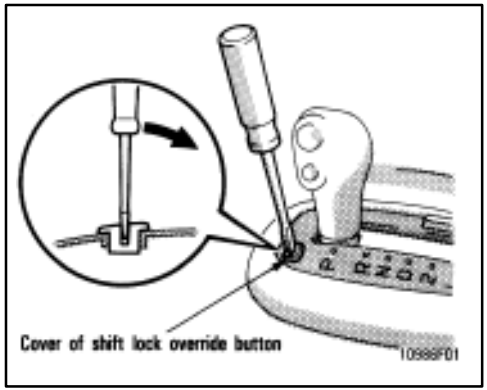

If you cannot shift the selector lever out of "P" position to other positions even though the brake pedal is depressed, use the shift lock override button as follows:

1. **Turn the ignition key to "LOCK" position. Make sure the parking brake is on.**
2. **Pry up the cover with a flat–bladed screwdriver or equivalent.**

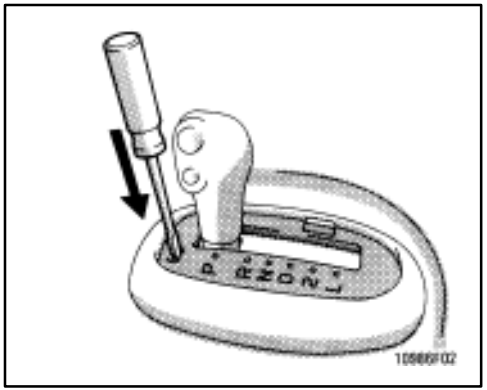

3. **Insert the screwdriver or equivalent into the hole to push down the shift lock override button. You can shift out of "P" position only while pushing the button.**
4. **Shift into "N" position.**
5. **Insert the cover.**
6. **Start the engine. For your safety, keep the brake pedal depressed.**

Be sure to have the system checked by your Toyota dealer as soon as possible.

If you lose your keys

Many Toyota dealers can make a new key if you can give them the key number.

See the suggestion given in "Keys" in Chapter 1–2.

If your keys are locked in the vehicle and you cannot get a duplicate, many Toyota dealers can still open the door for you, using their special tools. If you must break a window to get in, we suggest breaking the smallest side window because it is the least expensive to replace. Be extremely cautious to avoid cuts from the glass.

Part 5

CORROSION PREVENTION AND APPEARANCE CARE

® Protecting your Toyota from corrosion
® Washing and waxing your Toyota
® Cleaning the interior

Protecting your Toyota from corrosion

Toyota, through its diligent research, design and use of the most advanced technology available, has done its part to help prevent corrosion and has provided you with the finest quality vehicle construction. Now, it is up to you. Proper care of your Toyota can help ensure long–term corrosion prevention.

The most common causes of corrosion to your vehicle are:

® The accumulation of road salt, dirt and moisture in hard–to–reach areas under the vehicle.
® Chipping of paint, or undercoating caused by minor accidents or by stones and gravel.

Care is especially important if you live in particular areas or operate your vehicle under certain environmental conditions:

® Road salt or dust control chemicals will accelerate corrosion, as will the presence of salt in the air near the sea–coast or in areas of industrial pollution.
® High humidity accelerates corrosion especially when temperatures range just above the freezing point.
® Wetness or dampness to certain parts of your vehicle for an extended period of time, may cause corrosion even though other parts of the vehicle may be dry.
® High temperatures will cause corrosion to those components of the vehicle which are prevented from quick–drying due to lack of proper ventilation.

The above signifies the necessity to keep your vehicle, particularly the underside, as clean as possible and to repair any damage to paint or protective coatings as soon as possible.

To help prevent corrosion on your Toyota, follow these guidelines:

Wash your vehicle frequently: It is, of course, necessary to keep your vehicle clean by regular washing, but to prevent corrosion, the following points should be observed:

® If you drive on salted roads in the winter or if you live near the ocean, you should hose off the undercarriage at least once a month to minimize corrosion.

® High pressure water or steam is effective for cleaning the vehicle's underside and wheel housings. Pay particular attention to these areas as it is difficult to see all the mud and dirt. It will do more harm than good to simply wet the mud and debris without removing them. The lower edge of doors, rocker panels and frame members have drain holes which should not be allowed to clog with dirt as trapped water in these areas can cause corrosion.

® Wash the underside of the vehicle thoroughly when winter is over.

See "Washing and waxing your Toyota" for more tips.

Check the condition of your vehicle's paint and trim. If you find any chips or scratches in the paint, touch them up immediately to prevent corrosion from starting. If the chips or scratches have gone through the bare metal, have a qualified bodyshop make the repair.

Check the interior of your vehicle. Water and dirt can accumulate under the floor mats and could cause corrosion. Occasionally check under the mats to make sure the area is dry. Be particularly careful when transporting chemicals, cleansers, fertilizers, salt, etc; these should be transported in proper containers. If a spill or leak should occur, immediately clean and dry the area.

Use mud shields on your wheels. If you drive on salted or gravel roads, mud shields help protect your vehicle. Full–size shields, which come as near to the ground as possible, are the best. We recommend that the fittings and the area where the shields are installed be treated to resist corrosion. Your Toyota dealer will be happy to assist in supplying and installing the shields if they are recommended for your area.

Do not park your vehicle in a damp, poorly ventilated garage. If you wash your vehicle in the garage, or if you drive it in covered with water or snow, your garage may be so damp it will cause corrosion. Even if your garage is heated, a wet vehicle can corrode if the ventilation is poor.

Washing and waxing your Toyota

Washing your Toyota by hand

Work in the shade and wait until the vehicle body is not hot to the touch.

! CAUTION

When cleaning under floor or chassis, be careful not to injure your hands.

1. Rinse off loose dirt with a hose. Remove any mud or road salt from the underside of the vehicle or in the wheel wells.
2. Wash with a mild car–wash soap, mixed according to the manufacturer's instructions. Use a soft cotton mitt and keep it wet by dipping it frequently into the wash water. Do not rub hard–let the soap and water remove the dirt.

Aluminum wheels: Use only a mild soap or neutral detergent.

Plastic bumpers: Wash carefully. Do not scrub with abrasive cleaners. The bumper faces are soft.

Road tar: Remove with turpentine or cleaners that are marked safe for painted surfaces.

NOTICE

Do not use gasoline or strong solvents, which may be toxic or cause damage.

3. Rinse thoroughly — dried soap can cause streaking. In hot weather you may need to rinse each section right after you wash it.
4. To prevent water spots, dry the vehicle using a clean soft cotton towel. Do not rub or press hard — you might scratch the paint.

Automatic car wash

Your vehicle may be washed in an automatic car wash, but remember that the paint can be scratched by some type of brushes, unfiltered washing water, or the washing process itself. Scratching reduces paint durability and gloss, especially on darker colors. Also, automatic car wash equipment may interfer with a damage the rear spoiler if your vehicle is equipped with one. The manager of the car wash should be able to advise you whether the process is safe for the paint on your vehicle or the vehicle body itself.

NOTICE

To prevent damage to the antenna, make sure it is retracted before driving your Toyota through an automatic car wash.

Waxing your Toyota

Polishing and waxing is recommend–ed to maintain the original beauty of your Toyota's finish.

1. Always wash and dry the vehicle before you begin waxing, even if you are using a combined cleaner and wax.
2. Use a good quality polish and wax. If the finish has become extremely weathered, use a car–cleaning polish, followed by a separate wax. Carefully follow the manufacturer's instructions and precautions. Be sure to polish and wax the chrome trim as well as the paint.
3. Wax the vehicle again when water does not bead but remains on the surface in large patches.

NOTICE

Always remove the plastic bumpers if your vehicle is re–painted and placed in a high heat paint waxing booth. High temperatures could damage the bumpers.

Cleaning the interior

CAUTION

Do not wash the vehicle floor with water, or allow water to get into the floor when cleaning the vehicle interior or exterior. Water may get into audio components or other electrical components above or under the floor carpet (or mat) and cause a malfunction; and it may cause body corrosion.

Vinyl interior

The vinyl upholstery may be easily cleaned with a mild soap or detergent and water.

First vacuum over the upholstery to remove loose dirt. Then, using a sponge or soft cloth, apply the soap solution to the vinyl. After allowing it to soak in for a few minutes to loosen the dirt, remove the dirt and wipe off the soap with a clean damp cloth. If all the dirt does not come off, repeat the procedure. Commercial foaming–type vinyl cleaners are also available which work well. Follow the manufacturer's instructions.

NOTICE

Do not use solvent, thinner, gasoline or window cleaner on the interior.

Carpets

Use a good foam–type shampoo to clean the carpets.

Begin by vacuuming thoroughly to remove as much dirt as possible. Several types of foam cleaners are available' some are in aerosol cans and others are powders or liquids which you mix with water to produce a foam. To shampoo the carpets, use a sponge or brush to apply the foam. Rub in overlapping circles.

Do not apply water – the best results are obtained by keeping the carpet as dry as possible. Read the shampoo instructions and follow them closely.

Seat belts

The seat belts may be cleaned with mild soap and water or with lukewarm water.

Use a cloth or sponge. As you are cleaning, check the belts for excessive wear, fraying, or cuts.

NOTICE

Do not use dye or bleach on the belts–it may weaken them.

Windows

The windows may be cleaned with any household window cleaner.

NOTICE

When cleaning the inside of the windows, be careful not to scratch or damage the heater wires on the rear window.

Air conditioning control panel, car audio, instrument panel, console panel, and switches

Use a soft damp cloth for cleaning.

Soak a clean soft cloth in water or luke–warm water then lightly wipe off any dirt.

NOTICE

- ***Do not use organic substances (solvents, karosene, alcohol, gasoline, etc.) or alkaline or acidic solutions. These chemicals can cause discoloring, staining or peeling of the surface.***
- ***If you use cleaners or polishing agents, make sure their ingredients do not include the substances mentioned above.***
- ***If you use a liquid car freshener, do not apply the liquid onto the vehicle's interior surfaces. It may contain the ingredients mentioned above. Immediately clean any spill using the method mentioned above.***

Leather Interior

The leather uphostery may be cleaned with neutral detergent for wool.

Remove dirt using a soft cloth dampened with 5 % Solution of neutral detergent for woll. Then throughly wipe off all traces of detergent with a clean damp cloth.

After cleaning or whenever any part of the leather gets wet, dry with a soft clean cloth. Allow the leather to dry in a ventelated shaded area.

NOTICE

- ***If a stain should fail to come out with a neutral detergent, apply a cleaner that does not contain an organic solvent.***
- ***Never use organic substances such as benzine, alcohol or gasoline, or alkaline or acid solutions for cleaning the leather as these could cause discoloring.***
- ***Use of a nylon brush or synthetic fiber cloth, etc. may scratch the fine grained surface of the leather.***
- ***Mildew may develop on soiled leather upholstery. Be sepecially careful to avoid oil spots. Try to keep your upholstery always clean.***
- ***Long exposure to direct sunlight may cause the leather surface to harden a shrink. Keep your vehicle in a shaded area, especially in the summer.***
- ***The interior of your vehicle is apt to heat up on hot summer days, so avoid placing on the upholstery items made of vinyl or plastic or containing wax as these tend to stick to leather when warm.***

- ***Improper cleaning of the leather upholstery could result in discoloration or staining.***

If you have any questions about the cleaning of your Toyota, your local Toyota dealer will be pleased to answer them.

Part 6

VEHICLE MAINTENANCE AND CARE

® Maintenance requirements
® General maintenance
® Does your vehicle need repairing?

For scheduled maintenance information, please refer to the separate “Owner’s Manual Supplement/Maintenance Schedule”.

Maintenance requirements

Your Toyota vehicle has been designed for fewer maintenance requirements with longer service intervals to save both your time and money. However, each regular maintenance, as well as day–to–day care, is more important than ever before to ensure smooth, trouble–free, safe, and economical drivings.

It is the owner’s responsibility to make sure the specified maintenance, including general maintenance service, is performed. Note that both the new vehicle and emission control system warranties specify that proper maintenance and care must be performed. See Owner’s Guide, Owner’s Manual Supplement or Warranty Booklet for complete warranty information.

General maintenance

General maintenance items are those day–to–day care practices that are important to your vehicle for proper operation. It is the owner’s responsibility to ensure that the general maintenance items are performed regularly.

These checks or inspections can be done either by yourself or a qualified technician, or if you prefer, your Toyota dealer will be pleased to do them at a nominal cost.

Scheduled maintenance

The scheduled maintenance items listed in the “Owner’s Manual Supplement” are those required to be serviced at regular intervals.

For details of your maintenance Schedule, read the separate ”Owner’s Manual Supplement/Maintenance Schedule”.

It is recommended that any replacement parts used for maintenance or for the repair of the emission control system be Toyota supplied.

The owner may elect to use non–Toyota supplied parts for replacement purposes without invalidating the emission control system warranty. However, use of replacement parts which are not of equivalent quality may impair the effectiveness of the emission control systems.

You may also elect to have maintenance, replacement, or repair of the emission control devices and system performed by any automotive repair establishment or individual without invalidating this warranty. See Owner’s Guide, Owner’s Manual Supplement or Warranty Booklet for complete warranty information.

Where to go for service?

Toyota technicians are well–trained specialists and are kept up to date with the latest service information through technical bulletins, service tips, and in–dealership training programs. They learn to work on Toyotas before they work on your vehicle, rather than while they are working on it.

You can be confident that your Toyota dealer's service department performs the best job to meet the maintenance requirements on your vehicle—reliably and economically.

Your copy of the repair order is proof that all required maintenance has been performed for warranty coverage. And if any problems should arise with your vehicle while under warranty, your Toyota dealer will promptly take care of it. Again, be sure to keep a copy of the repair order for any service performed on your Toyota.

What about do–it–yourself maintenance?

Many of the maintenance items are easy to do yourself if you have a little mechanical ability and a few basic automotive tools. Simple instructions for how to perform them are presented in Part 7.

If you are a skilled do–it–yourself mechanic, the Toyota service manuals are recommended. Please be aware that do–it–yourself maintenance can affect your warranty coverage. See Owner's Guide, Owner's Manual Supplement or Warranty Booklet for the details.

General maintenance

Listed below are the general maintenance items that should be performed as frequently as specified. In addition to checking the items listed, if you notice any unusual noise, smell or vibration, you should investigate the cause or take your vehicle to your Toyota dealer or a qualified service shop immediately. It is recommended that any problem you notice be brought to the attention of your dealer or the qualified service shop for their advice.

! CAUTION

Make these checks only where adequate ventilation can be obtained if you run the engine.

OUTSIDE THE VEHICLE

Items listed below should be performed from time to time, unless otherwise specified.

Tire pressure

Check the pressure with a gauge every two weeks, or at least once a month. See Chapter 7–2 for additional information.

Tire surface and wheel nuts

Check the tires carefully for cuts, damage or excessive wear. See Chapter 7–2 for additional information. When checking the tires, make sure no nuts are missing, and check the nuts for looseness. Tighten them if necessary.

Fluid leaks

Check underneath for leaking fuel, oil, water or other fluid after the vehicle has been parked for a while. If you smell fuel fumes or notice any leak, have the cause found and corrected immediately.

Doors and engine hood

Check that all doors including back door operate smoothly and all latches lock securely. Make sure the engine hood secondary latch secures the hood from opening when the primary latch is released.

INSIDE THE VEHICLE

Items listed below should be checked regularly, e.g. while performing periodic services, cleaning the vehicle, etc.

Lights

Make sure the headlights, stop lights, tail lights, turn signal lights, and other lights are all working. Check headlight aim.

Service reminder indicators and warning buzzers

Check that all service reminder indicators and warning buzzers function properly.

Steering wheel

Be alert for changes in steering condition, such as hard steering or strange noise.

Seats

Check that all front seat controls such as seat adjusters, seatback recliner, etc. operate smoothly and that all latches lock securely in any position. For folding–down rear seatbacks, check that the latches lock securely. Make sure the front headrests are firmly secured.

Seat belts

Check that the seat belt system such as buckles, retractors and anchors operate properly and smoothly. Make sure the belt webbing is not cut, frayed, worn or damaged.

Accelerator pedal

Check the pedal for smooth operation and uneven pedal effort or catching.

Clutch pedal

Check the pedal for smooth operation.

Brake pedal

Check the pedal for smooth operation and that the pedal has the proper clearance. Check the brake booster function.

Brakes

At a safe place, check that the brakes do not pull to one side when applied.

Parking brake

Check that the lever has the proper travel and that, on a safe incline, your vehicle is held securely with only the parking brake applied.

Automatic transmission “Park” mechanism

Check the lock release button of the selector lever for proper and smooth operation. On a safe incline, check that your vehicle is held securely with the selector lever in ”P” position and all brakes released.

IN THE ENGINE COMPARTMENT

Items listed below should be checked from time to time , e.g. each time when refueling.

Washer fluid

Make sure there is sufficient fluid in the tank. See Chapter 7–3 for additional information.

Engine coolant level

Make sure the coolant level is between the ”FULL” and ”LOW” lines on the see–through reservoir when the engine is cold. See Chapter 7–2 for additional information.

Battery electrolyte level

Make sure the electrolyte level of all battery cells is correct. Add only distilled water when replenishing. See Chapter 7–3 for additional information.

Brake fluid level

Make sure the brake fluid level is correct. See Chapter 7–2 for additional information.

Engine oil level

Check the level on the dipstick with the engine turned off and the vehicle parked on a level spot. See Chapter 7–2 for additional information.

Power steering fluid level

Check the level on the dipstick. The level should be in the “HOT” or “COLD” range depending on the fluid temperature. See Chapter 7–2 for additional information.

Exhaust system

If you notice any change in the sound of the exhaust or smell exhaust fumes, have the cause located and corrected immediately. (See engine exhaust cautions in Part 2.)

Does your vehicle need repairing?

Be on the alert for changes in performance, sounds, and visual tip–offs that indicate service is needed. Some important clues are as follows:

- Engine missing, stumbling, or pinging
- Appreciable loss of power
- Strange engine noises
- A leak under the vehicle (however, water dripping from the air conditioning after use is normal.)
- Change in exhaust sound (This may indicate a dangerous carbon monoxide leak. Drive with the windows open and have the exhaust system checked immediately.)
- Flat–looking tire; excessive tire squeal when cornering; uneven tire wear
- Vehicle pulls to one side when driving straight on a level road
- Strange noises related to suspension movement
- Loss of brake effectiveness; spongy feeling brake or clutch pedal; pedal almost touches floor; vehicle pulls to one side when braking
- Engine coolant temperature continually higher than normal

If you notice any of these clues, take your vehicle to your Toyota dealer as soon as possible. It probably needs adjustment or repair.

CAUTION

Do not continue driving with the vehicle unchecked. It could result in serious vehicle damage and possibly personal injury.

Part 7

DO–IT–YOURSELF MAINTENANCE—

Chapter 7–1

Introduction

- Engine compartment overview
- Fuse locations
- Do–it–yourself service precautions
- Parts and tools

Engine compartment overview (2JZ–GE engine)

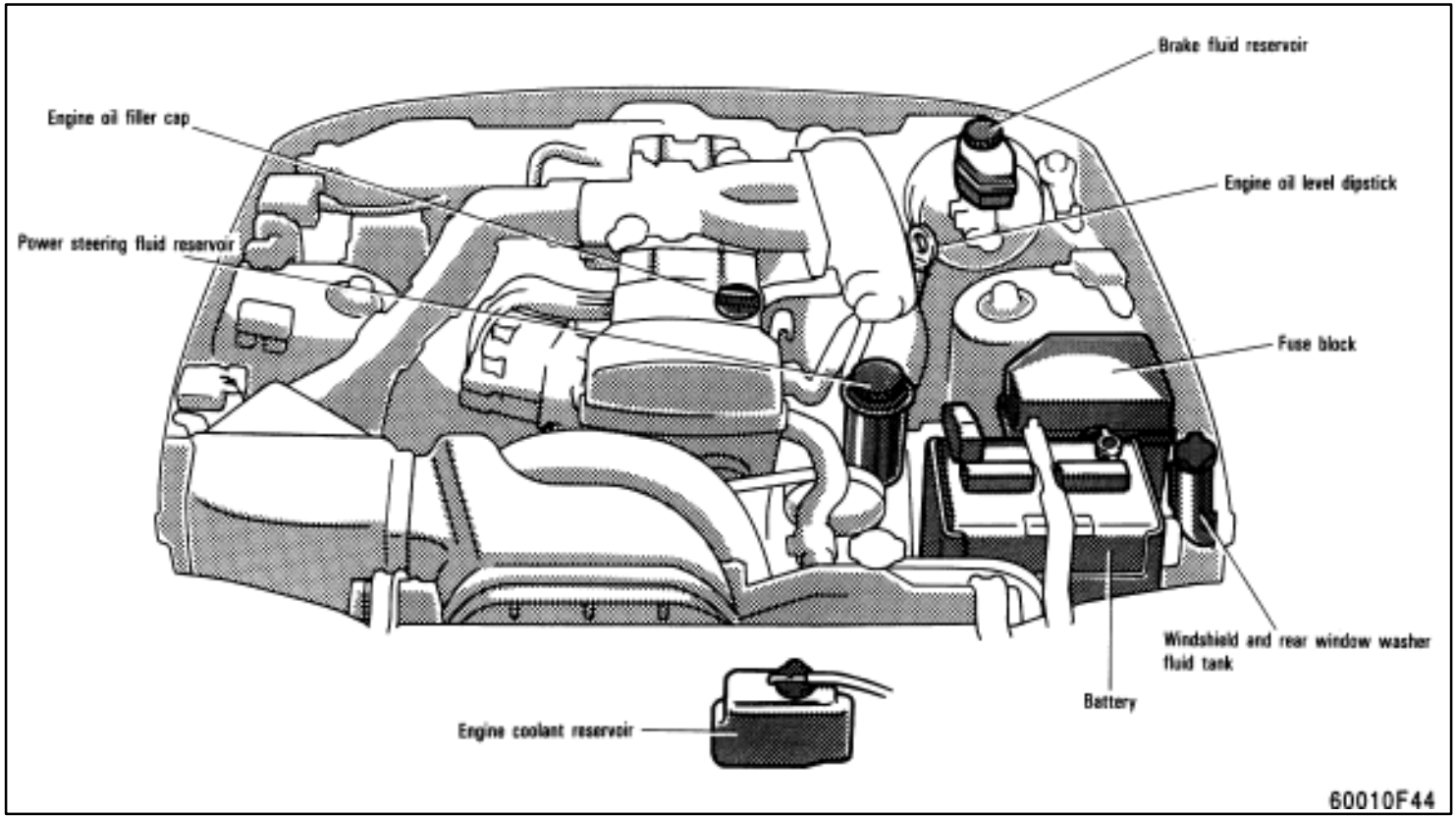

Engine compartment overview (2JZ–GTE engine)

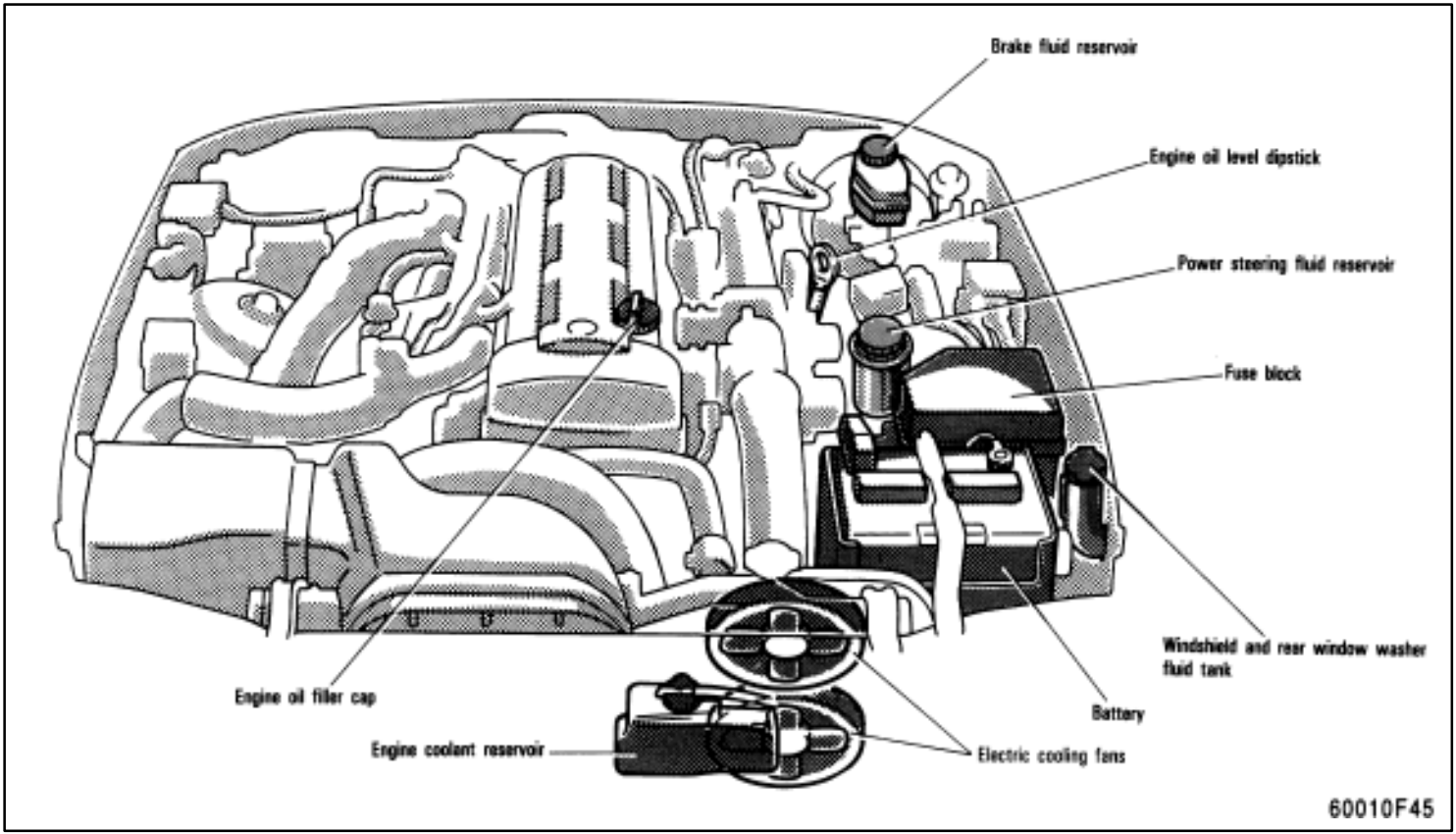

Fuse locations

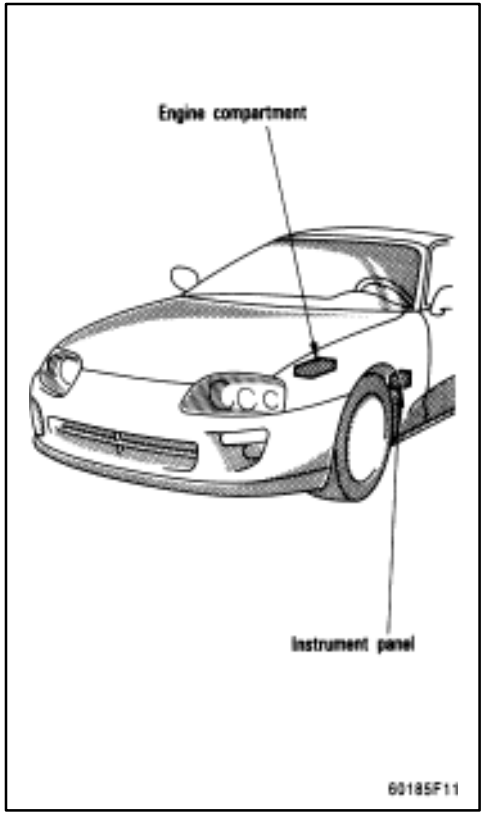

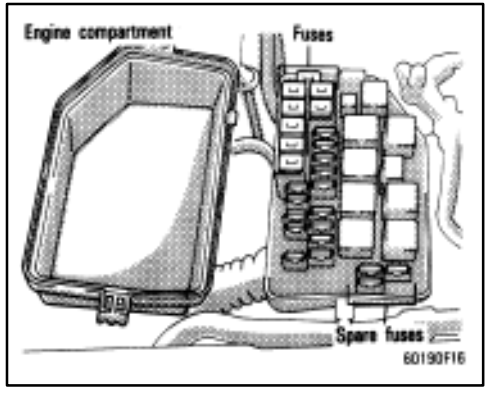

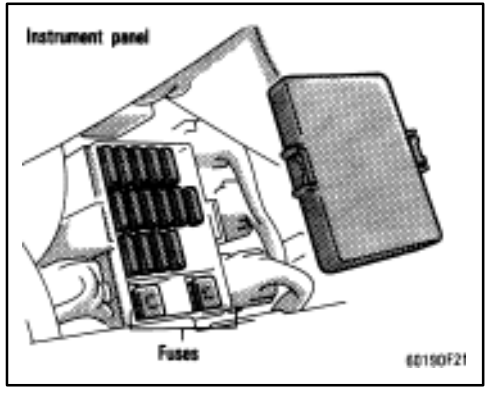

Do–it–yourself service precautions

If you perform maintenance by yourself, be sure to follow the correct procedure given in this part.

You should be aware that improper or incomplete servicing may result in operating problems.

Performing do–it–yourself maintenance during the warranty period may affect your warranty coverage. Read the separate Toyota Warranty statement for details and suggestions.

This part gives instructions only for those items that are relatively easy for an owner to perform. As explained in Part 6, there are still a number of items that must be done by a qualified technician with special tools.

For information on tools and parts for do–it–yourself maintenance, see “Parts and tools”.

Utmost care should be taken when working on your vehicle to prevent accidental injury. Here are a few precautions that you should be especially careful to observe:

⚠ CAUTION

- **®When the engine is running, keep hands, clothing, and tools away from the moving fan and engine drive belts. (Removing rings, watches, and ties is advisable.)**
- **®Right after driving, the engine compartment—the engine, radiator, exhaust manifold, power steering fluid reservoir and spark plug boots, etc.—will be hot. So be careful not to touch them. Oil, fluids and spark plugs may also be hot.**
- **®If the engine is hot, do not remove the radiator cap or loosen the drain plugs to prevent burning yourself.**
- **®Do not smoke, cause sparks or allow open flames around fuel or the battery. Their fumes are flammable.**
- **®Be extremely cautious when working on the battery. It contains poisonous and corrosive sulfuric acid.**
- **®Do not get under your vehicle with just the body jack supporting it. Always use automotive jack stands or other solid supports.**
- **®Be sure that the ignition is off if you work near the electric cooling fans or radiator grille. With the ignition on, the electric cooling fans will automatically start to run if the engine coolant temperature is high and/or the air conditioning is on.**
- **®Use eye protection whenever you work on or under you vehicle where you may be exposed to flying or falling material, fluid spray, etc.**
- **®Used engine oil contains potentially harmful contaminants which may cause skin disorders such as inflammation or skin cancer, so care should be taken to avoid prolonged and repeated contact with it. To remove used engine oil from your skin, wash thoroughly with soap and water.**
- **®Do not leave used oil within the reach of children.**
- **®Dispose of used oil and filter only in a safe and acceptable manner. Do not dispose of used oil and filter in household trash, in sewers or onto the ground. Call your dealer or a service station for information concerning recycling or disposal.**

NOTICE

- ***◀Remember that battery and ignition cable carry high currents or voltages. Be careful of accidentally causing a short circuit.***
- ***◀Add only demineralized or distilled water to fill the radiator. And if you spill some of the coolant, be sure to wash it off with water to prevent it from damaging the parts or paint.***
- ***◀Do not overfill automatic transmission fluid, or the transmission could be damaged.***
- ***◀Do not drive with the air cleaner filter removed, or excessive engine wear could result. Also backfiring could cause a fire in the engine compartment.***

◀***Be careful not to scratch the glass surface with the wiper frame.***

◀***When closing the engine hood, check to see that you have not forgotten any tools, rags, etc.***

Parts and tools

Here is a list of parts and tools you will need on performing do–it–yourself maintenance. Remember all Toyota parts are designed in metric sizes, so your tools must be metric.

Checking the engine oil level

Parts (if level is low):

® Engine oil API SH, “Energy–Conserving II” multigrade or ILSAC multigrade having viscosity proper for your climate

Tools:

® Rag or paper towel

® Funnel (only for adding oil)

Checking the engine coolant level

Parts (if level is low):

® Ethylene–glycol antifreeze

® Demineralized or distilled water

Tools:

® Funnel (only for adding coolant)

Checking brake fluid

Parts (if level is low):

® SAE J1703 or FMVSS No. 116 DOT 3 brake fluid

Tools:

® Rag or paper towel

® Funnel (only for adding fluid)

Checking power steering fluid

Parts (if level is low):

® Automatic transmission fluid DEXRON®II or III

Tools:

® Rag or paper towel

® Funnel (only for adding fluid)

Checking battery condition

Non–maintenance batteries—

Tools:

® Warm water

® Baking soda

® Grease

® Conventional wrench (for terminal clamp bolts)

Maintenance type batteries—

Parts (if level is low):

® Distilled water

Tools:

® Warm water

® Baking soda

® Grease
® Conventional wrench (for terminal clamp bolts)
® Coin (for vent plugs)
® Funnel (only for adding distilled water)

Checking and replacing fuses

Parts (if replacement is necessary):

® Fuse with same amperage rating as original

Adding washer fluid

Parts:

® Water
® Washer fluid containing antifreeze (for winter use)

Tools:

® Funnel

Replacing light bulbs

Parts:

® Bulb with same number and wattage rating as original (See charts in “Replacing light bulbs” in Chapter 7–3.)

Tools:

® Screwdriver

Part 7
DO–IT–YOURSELF MAINTENANCE—

Chapter 7–2
Engine and Chassis

◀ Checking the engine oil level
◀ Checking the engine coolant level
◀ Checking brake fluid
◀ Checking power steering fluid
◀ Checking tire pressure
◀ Checking and replacing tires
◀ Rotating tires
◀ Installing snow tires and chains
◀ Replacing wheels
◀ Aluminum wheel precautions

Checking the engine oil level

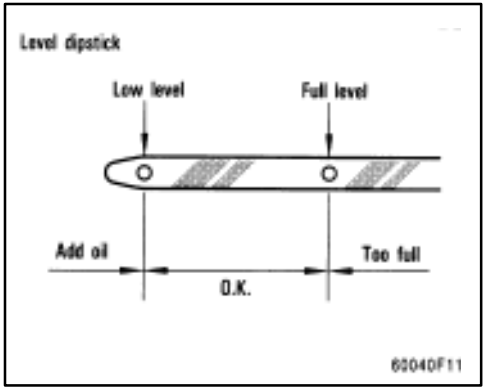

With the engine at operating temperature and turned off, check the oil level on the dipstick.

1. To get a true reading, the vehicle should be on a level spot. After turning off the engine, wait a few minutes for the oil to drain back into the bottom of the engine.
2. Pull out the dipstick, and wipe it clean with a rag.
3. Reinsert the dipstick—push it in as far as it will go, or the reading will not be correct.
4. Pull the dipstick out and look at the oil level on the end.

If the oil level is below or only slightly above the low level, add engine oil of the same type as already in the engine.

Remove the oil filter cap and add engine oil in small quantities at a time, checking the dipstick.

The approximate quantity of oil needed to fill between the low level and the full level on the dipstick is indicated below for reference.

When the level reaches within the correct range, install the filler cap hand–tight.

Oil quantity, L (qt., Imp. qt.): 1.5 (1.6, 1.3)

NOTICE

- ***Avoid overfilling, or the engine could be damaged.***
- ***Check the oil level on the dipstick once again after adding the oil.***

ENGINE OIL SELECTION

2JZ–GE engine—Use API SH, “Energy–Conserving II” multigrade engine oil or ILSAC multigrade engine oil.

Recommended viscosity (SAE):

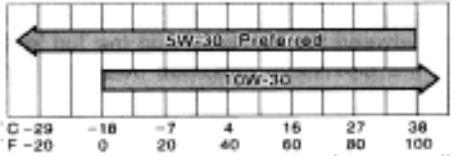

SAE 5W–30 is the best choice for your vehicle, for good fuel economy, and good starting in cold weather.

If you use SAE 10W–30 engine oil in extremely low temperatures, the engine may become difficult to start, so SAE 5W–30 engine oil is recommended.

2JZ–GTE engine—Use API SH, “Energy–Conserving II” multigrade engine oil or ILSAC multigrade engine oil.

Recommended viscosity (SAE):

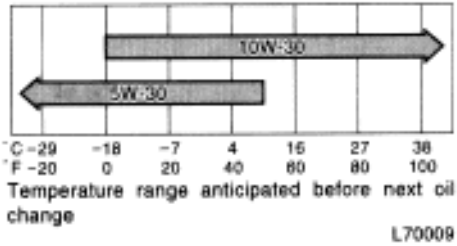

If you use SAE 10W–30 engine oil in extremely low temperatures, the engine may become difficult to start, so SAE 5W–30 engine oil is recommended.

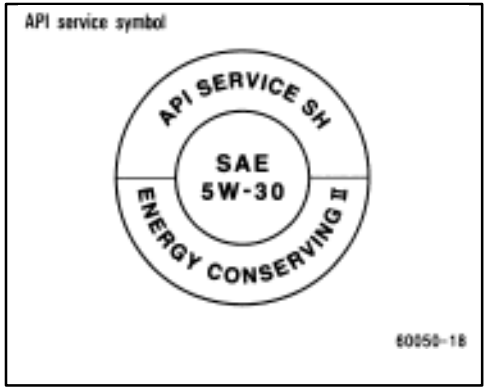

Oil identification marks

Either or both API registered marks are added to some oil containers to help you select the oil you should use.

The API Service Symbol is located anywhere on the outside of the container.

The top portion of the label shows the oil quality by API (American Petroleum Institute) designations such as SH. The center portion of the label shows the SAE viscosity grade such as SAE 5W–30. “Energy–Conserving II” shown in the lower portion, indicates that the oil has fuel–saving capabilities. Oils marked “Energy–Conserving II” will have higher fuel–saving capabilities than oil marked “Energy–Conserving”.

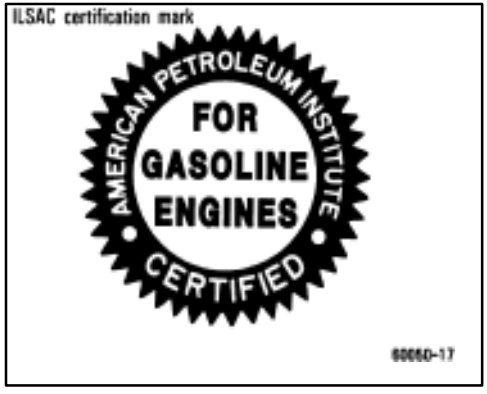

The ILSAC (International Lubricant Standardization and Approval Committee) Certification Mark is displayed on the front of the container.

Checking the engine coolant level

Look at the see–through coolant reservoir when the engine is cold. The coolant level is satisfactory if it is between the “FULL” and “LOW” lines on the reservoir. If the level is low, add ethylene–glycol type coolant.

The coolant level in the reservoir will vary with engine temperature. However, if the level is on or below the “LOW” line, add coolant. Bring the level up to the “FULL” line.

Use only ethylene–glycol type coolant. See information in the next column.

If the coolant level drops within a short time after replenishing, there may be a leak in the system. Visually check the radiator, hoses, radiator cap and drain cock and water pump.

If you can find no leak, have your Toyota dealer test the cap pressure and check for leaks in the cooling system.

CAUTION

To prevent burning yourself, do not remove the radiator cap when the engine is hot.

Coolant type selection

Your coolant must contain ethylene–glycol antifreeze. In addition to preventing freezing and subsequent damage to the engine, this will also prevent corrosion. Further supplemental inhibitors or additives are neither needed nor recommended.

Read the antifreeze container for information on freeze protection. Follow the manufacturer’s directions for how much to mix with water. The total capacity of the cooling system is given in Part 8. We recommend 50% solution be used for your Toyota, or a sufficient quantity to provide protection to about –35▼C (–31▼C).

NOTICE

Do not use alcohol type antifreeze or plain water alone.

Checking brake fluid

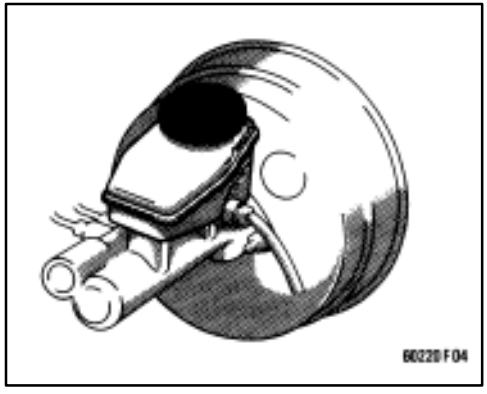

To check the fluid level, simply look at the see through reservoir. The level should be between the "MAX" and "MIN" lines on the reservoir.

It is normal for the brake fluid level to go down slightly as the brake pads wear. So be sure to keep the reservoir filled.

If the reservoir needs frequent refilling, it may indicate a serious mechanical problem.

If the level is low, add SAE J1703 or FMVSS No. 116 DOT 3 brake fluid to the brake reservoir.

Remove and replace the reservoir cover by hand. Fill the brake fluid to the dotted-line. This brings the fluid to the correct level when you put the cover back on.

Use only newly opened brake fluid. Once opened, brake fluid absorbs moistuire from the air, and excess moisture can cause a dangerous loss of braking.

⚠ CAUTION

Take care when filling the reservoir because brake fluid can harm your eyes and damage painted surfaces. If fluid gets in your eyes, flush your eyes with clean water.

NOTICE

If you spill the fluid, be sure to wash it off with water to prevent it from damaging the parts or paint.

Checking power steering fluid

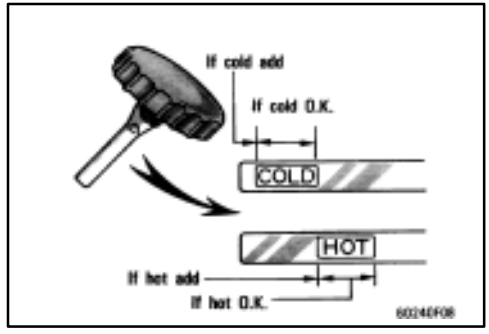

Check the fluid level on the dipstick. If necessary, add automatic transmission fluid DEXRON®II or III.

If the vehicle has been driven around 80 km/h (50 mph) for 20 minutes (a little more in frigid temperatures), the fluid is hot (60▼C—80▼C or 140▼F—175▼F). You may also check the level when the fluid is cold (about room temperature, 10▼C—30▼C or 50▼F—85▼F) if the engine has not been run for about five hours.

a. Cleann all dirt from outside of the reservoir tank.

b. Remove the filler cap by turning it counterclockwise and wipe the dipstick clean.

c. Reinstall the filter cap.

d. Remove the filter cap again and look at the fluid level. If the fluid is cold, the level should be in the “COLD“ range on the dipstick. Similarity, if it is hot, the fluid level should be in the “HOT“ range. If the level is at the low side of either range, add automatic transmission fluid DEXRON®II or III to bring the level within the range.

e. After replacing the filter cap, visually check the steering box case., vane pump and hose connections for leaks or damage.

CAUTION

The reservoir tank may be hot so be careful not to burn yourself.

NOTICE

Avoid overfilling, or the power steering could be damaged.

Checking tire pressure

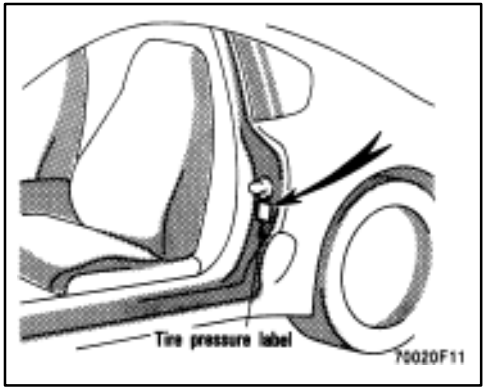

Keep your tire pressures at the proper level.

The recommended cold tire pressures, tire size and the vehicle capacity weight are also given in Part 8. They are also on the tire pressure as label shown.

You should check the tire pressures every two weeks, or at least once a month. And don’t forget the spare!

Incorrect tire pressure can reduce tire life and make your vehicle less safe to drive.

Low tire pressure results in excessive wear, poor handling, reduced fuel economy, and the possibility of blowouts from overheated tires. Also, low tire pressure can cause poor sealing of the tire bead. If the tire pressure is excessively low, there is the possibility of wheel deformation and/or tire separation.

High tire pressure produces a harsh ride, handling problems, excessive wear at the center of the tire tread, and a greater possibility of tire damage from road hazards.

If a tire frequently needs refilling, have it checked by your Toyota dealer.

The following instructions for checking tire pressure should be observed:

- **The pressure should be checked only when the tires are cold.** If your vehicle has been parked for at least 3 hours and has not been driven for more than 1.5 km or 1 mile since , you will get an accurate cold tire pressure reading.
- **Always use a tire pressure gauge.** The appearance of a tire can be misleading. Besides, the presures that are even just a few pounds off can degrade handling and ride.

Checking and replacing tires

- **Take special care when adding air to the compact spare tire.** The smaller tire size can gain pressure very quickly. Add compressed air in small quantities and check the pressure often until it reaches the specified pressure.
- **Do not bleed or reduce tire pressure after driving.** It is normal for the tire pressure to be higher after driving
- **Never exceed the vehicle capacity weight.** The passenger and luggage weight should be located so that the vehicle is balanced.
- **Be sure to reinstall the tire inflation valve caps.** Without the valve caps, dirt or moisture could get into the valve core and cause air leakage. If the caps have been lost, have new ones put on as soon as possible.

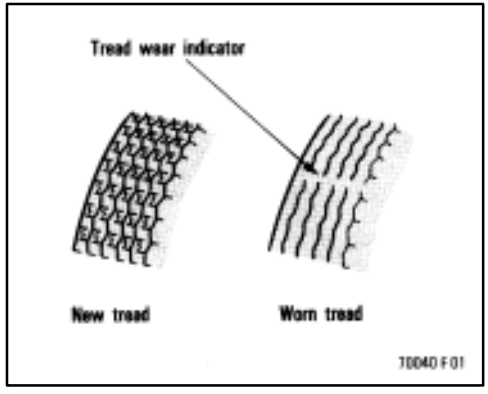

CHECKING YOUR TIRES

Check the tire tread for the tread wear indicators. If the indicators show, replace the tires.

The tires on your Toyota have built–in tread wear indicators to help you know when the tires need replacement. When the tread depth wears to 1.6 mm (0.06 in.) or less, the indicators will appear. If you can see the indicators in two or more adjacent grooves, the tire should be replaced. The lower the tread, the higher the risk of skidding.

Your Supra has been fitted with specially developed tires which provide exceptional dynamic performance under general road conditions. However, you may also notice that your tyires wear more rapidly than standard tires as a result of their superior performance.

The effectiveness of snow tires is lost if the tread wears down below 4 mm (0.16 in.).

Check the tires regularly for damage such as cuts, splits and cracks. If any damage is found, consult with a technician and have the tire repaired or replaced.

Even if the damage does not appear serious, a qualified technician should examine the damage. Objects which have penetrated the tire may have caused internal damage.

Any tires which are over six years old must be checked by a qualified technician even if damage is not obvious.

Tires deteriorate with age even if they have never or seldom been used.

This also applies to the spare tire and tires stored for future use.

REPLACING YOUR TIRES

When replacing a tire, use only the same size and construction as originally installed and with the same or greater load capacity.

Using any other size or type of tire may seriously affect handling, ride, speedometer/odometer calibration, ground clearance, and clearance between the body and tires or snow chains

CAUTION

- **Do not mix radial, bias belted, or bias–ply tires on your vehicle. It can cause dangerous handling characteristics, resulting in loss of control.**
- **Do not use tire or wheels other than the manufacturer's recommended size.**

Toyota recommends all four tires, or at least both of the front or rear tires be replaced at a time as a set.

See "If you have a flat tire" in Part 4 for tire change procedure.

When a tire is replaced, the wheel should always be balanced.

An unbalanced wheel may affect vehicle handling and tire life. Wheels can get out of balance with regular use and should therefore be balanced occasionally.

When replacing a tubeless tire, the air valve should also be replaced with a new one.

Rotating tires

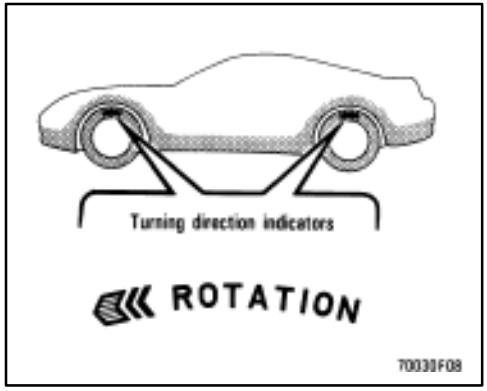

Do not perform rotation of the tires, from front to rear or from left to right, or using the compact spare tire. Performing such tire rotation may result in the tires interfering with the body or in uneven wear of the tires, so that steerability of the vehicle is impaired.

Tires with turning direction indicator—
The tire is a uni–directional type and cannot be used for tire rotation. Using the tire on the opposite side to the designated side will impair the tire performance.

The compact spare tire—

The tire is designed for temporary use only and cannot be used for tire rotation.

Installing snow tires and chains

WHEN TO USE SNOW TIRES OR CHAINS

Snow tires or chains are recommended when driving on snow or ice.

On wet or dry roads, conventional tires provide better traction than snow tires.

SNOW TIRE SELECTION

If you need snow tires, select tires of the same size, construction and load capacity as the original tires on your Toyota.

Do not install studded tires without first checking local regulations for possible restrictions.

SNOW TIRE INSTALLATION

Snow tires should be installed on all wheels.

Installing snow tires on the front wheels only can lead to an excessive difference in road grip capability between the front and rear tires which would cause loss of vehicle control.

When storing removed tires, you should store them in a cool dry place.Mark the direction of rotation and be sure to install

Mark the direction of rotation and be sure to install them in the same direction when replacing.

CAUTION

◀Do not drive with the snow tires incorrectly inflated.

◀Never drive over 120 km/h (75 mph) with any type of snow tires.

TIRE CHAIN SELECTION

Use the tire chains of correct size and type.

Use SAE Class “S” type radial tire chains except radial cable chains or V–bar type chains.

Regulations regarding the use of tire chains vary according to location or type of road, so always check them before installing chains.

NOTICE

Do not install tire chains on the 255/40zr17 tires, as this could damage the vehicle body.

CHAIN INSTALLATION

Install the chains on the rear tires as tightly as possible. Do not use tire chains on the rear tires. Retighten chains after driving 0.5—1.0 km (1/4—1/2 mile).

When installing chains on your tires, carefully follow the instructions of the chain manufacturer.

If wheel covers are used, they will be scratched by the chain band, so remove the covers before putting on the chains.

CAUTION

◀Do not exceed 50 km/h (30 mph) or the chain manufacturer’s recommended speed limit, whichever is lower.

◀Drive carefully avoiding bumps, holes, and sharp turns, which may cause the vehicle to bounce.

◀Avoid sharp turns or locked–wheel braking, as use of chains may adversely affect vehicle handling.

NOTICE

Do not attempt to use a tire chain on the compact spare tire, as it may result in damage to the vehicle as well as the tire.

Replacing wheels

WHEN TO REPLACE YOUR WHEELS

If you have wheel damage such as bending, cracks or heavy corrosion, the wheel should be replaced.

If you fail to replace damaged wheels, the tire may slip off the wheel or they may cause loss of handling control.

WHEEL SELEC TION

When replacing wheels, care should be taken to ensure that the wheels are replaced by ones with the same load capacity, diameter, rim width, and offset.

This must be observed on compact spare tires, too.

Correcty replacement wheels are available at your Toyota dealer..

A wheel of a different size or type may adversely affect handling, wheel and bearing life, brake cooling, speedometer/ odometer calibration, stopping ability, headlight aim, bumper height, vehicle ground clearance, and tire or snow chain clearance to the body and chassis.

Replacement with used wheels is not recommended as they may have been subjected to rough treatyment or high mileage and could fail without warning. Also, bent wheels which have been straightened may have structural damage and therefore should not be used. Never use an inner tube in aleaking wheel which is designed for a tubeless tire.

Aluminum wheel precautions

- After driving your vehicle the first 1600 km (1000 miles), check that the wheel nuts are tight.
- If you have repaired or changed your tires, check that the wheel nuts are still tight after driving 1600 km (1000 miles).
- When using tire chians, be careful not to damage the aluminum wheels.
- Use only the Toyota wheel nuts and wrench designed for your aluminum wheels
- When balancing your wheels, use only Toyota balance weights or equivalent and a plastic or rubber hammer.
- As with any wheel, periodically check your aluminum wheels for damage. If damage, replace immediatly.

Part 7

DO–IT–YOURSELF MAINTENANCE—

Chapter 7–3

Electrical components

- Checking battery condition
- Battery recharging precautions
- Checking and replacing fuses
- Adding washer fluid
- Checking the headlight aim
- Replacing light bulbs

Checking battery condition——Precautions

CAUTION

BATTERY PRECAUTIONS

The battery produces flammable and explosive hydrogen gas.

- **Do not cause a spark from the battery with tools.**
- **Do not smoke or light a match near the battery.**

The electrolyte contains poisonous and corrosive sulfuric acid.

- **Avoid contact with eyes, skin or clothes.**
- **Never ingest electrolyte.**
- **Wear protective safety glasses when working near the battery.**
- **Keep children away from the battery.**

EMERGENCY MEASURES

- **If electrolyte gets in your eyes, flush your eyes with clean water for at least 15 minutes and get immediate medical attention. If possible, continue to apply water with a sponge or cloth while en route to the medical office.**
- **If electrolyte gets on your skin, thoroughly wash the contact area. If you feel pain or burning, get medical attention immediately.**
- **If electrolyte gets on your clothes, there is a possibility of its soaking through to your skin, so immediately take off the exposed clothing and follow the procedure above, if necessary.**
- **If you happen to swallow electrolyte, drink a large quantity of water or milk. Follow with milk of magnesia, beaten raw egg or vegetable oil. Then go immediately for emergency help.**

—Checking battery exterior

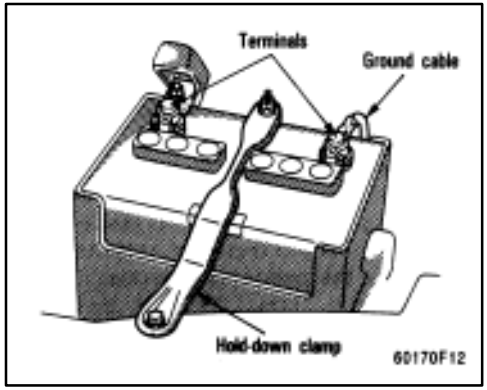

Check the battery for corroded or loose terminal connections, cracks, or loose hold–down clamp.

a. If the battery is corroded, wash it off with a solution of warm water and baking soda. Coat the outside of the terminals with grease to prevent further corrosion.

b. If the terminal connections are loose, tighten their clamp nuts–but do not overtighten.

c. Tighten the hold–down clamp only enough to keep the battery firmly in place. Overtightening may damage the battery case.

NOTICE

- ***Be sure the engine and all accessories are off before performing maintenance.***
- ***When checking the battery, remove the ground cable from the negative terminal (“–” mark) first and reinstall it last.***
- ***Be careful not to cause a short circuit with tools.***
- ***Take care no solution gets into the battery when washing it.***

—Checking battery fluid

There are two types of batteries: Maintenance type and non–maintenance type.

A non–maintenance battery has “MAINTENANCE FREE BATTERY” on its top. A maintenance type battery does not have such indication.

Maintenance type battery—

Check the fluid condition by the fluid level lines on the side of the battery. Or if the battery has a hydrometer on its top, you can also check the hydrometer.

Non–maintenance battery—

Check the battery condition by the hydrometer on the top of the battery.

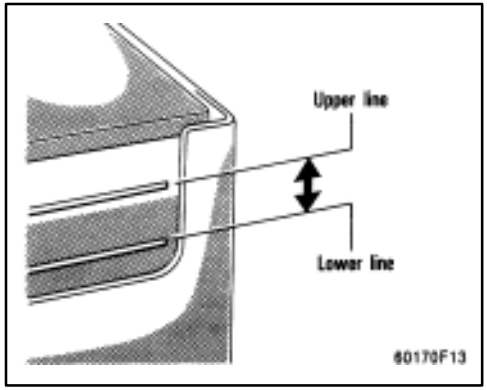

CHECKING BY THE FLUID LEVEL LINES (MAINTENANCE TYPE BATTERY ONLY)

The fluid (electrolyte) level must be between the upper and lower lines.

When checking the fluid level, look at all six cells, not just one or two.

If the level is lower than the lower line, add distilled water. (See “ADDING DISTILLED WATER”.)

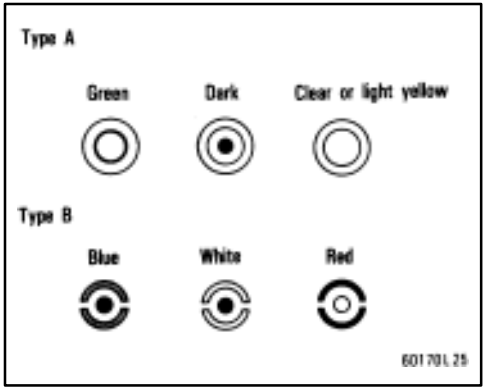

CHECKING BY THE HYDROMETER

Check the battery condition by the hydrometer color.

Hydrometer color		Condition
Type A	Type B	
GREEN	BLUE	Good
DARK	WHITE	Charging necessary. Have battery checked by your Toyota dealer.
CLEAR or LIGHT YELLOW	RED	Add distilled water*

*: See “ADDING DISTILLED WATER”.

Non–maintenance battery

Hydrometer color		Condition
Type A	Type B	
GREEN	BLUE	Good
DARK	WHITE	Charging necessary. Have battery checked by your Toyota dealer.
CLEAR or LIGHT YELLOW	RED	Have battery checked by your Toyota dealer.

NOTICE

Do not refill the battery with water.

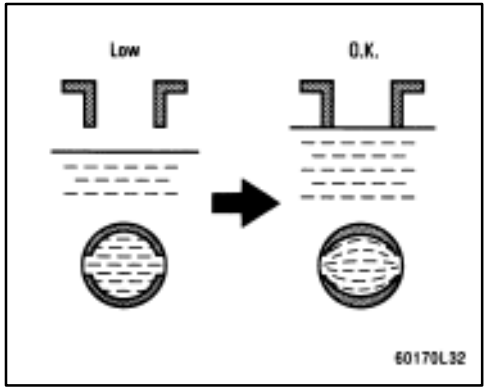

ADDING DISTILLED WATER (MAINTENANCE TYPE BATTERY ONLY)

1. Remove the vent plugs.
2. Add distilled water to cells needing fluid.

If the side of your battery is covered, check the water level by looking down directly above the cell as illustrated above.

3. Retighten the vent plugs securely

NOTICE

Do not overfill the cells. Excess electrolyte could squirt out of the battery during heavy charging, causing corrosion or damage.

Battery recharging precautions

During recharging, the battery is producing hydrogen gas.

Therefore, before recharging:

1. Maintenance type batteries—Remove the vent plugs.
2. If recharging with the battery installed on the vehicle, be sure to disconnect the ground cable.
3. Be sure the power switch on the recharger is off when connecting the charger cables to the battery and when disconnecting them.

⚠ CAUTION

®Always charge the battery in an unconfined area. Do not charge the battery in a garage or closed room where there is not sufficient ventilation.

®Non-maintenance batteries: Only do a slow charge (5A or less). Charging at a quicker rate is dangerous. The battery may explode, causing personal injuries.

Maintenance type batteries: Be sure to remove the vent plugs before recharging.

Checking and replacing fuses

NOTICE

Never recharge the battery while the engine is running. Also, be sure all accessories are turned off.

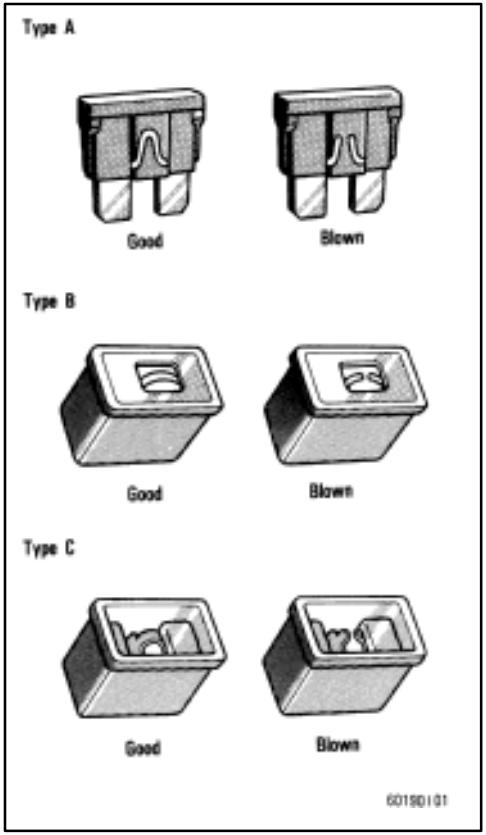

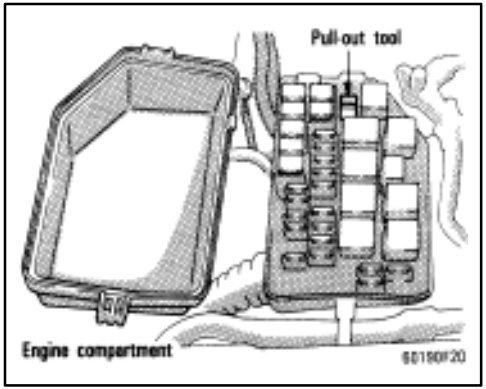

If the headlights or other electrical components do not work, check the fuses. If any of the fuses are blown, they must be replaced.

See “Fuse locations” in Chapter 7–1 for locations of the fuses.

Turn the ignition switch and inoperative component off. Pull a suspected fuse straight out and check it.

Determine which fuse may be causing the problem. The lid of the fuse box shows the name of the circuit for each fuse. See Part 8 of this manual for the functions controlled by each circuit.

Type A fuses can be pulled out by using the pull–out tool.

If you are not sure whether the fuse has blown, try replacing the suspected fuse with one that you know is good.

If the fuse has blown, push a new fuse into the clip.

Only install a fuse with the amperage rating designated on the fuse box lid.

If you do not have a spare fuse, in an emergency you can pull out the “CIG”, “RAD NO. 2”, “DOME” or “HTR” fuse, which may be dispensable for normal driving, and use it if its amperage rating is the same.

If you cannot use one of the same amperage, use one that is lower, but as close as possible to the rating. If the amperage is lower than that specified, the fuse might blow out again but this does not indicate anything wrong. Be sure to get the correct fuse as soon as possible and return the substitute to its original clip.

It is a good idea to purchase a set of spare fuses and keep them in your vehicle for emergencies.

If the new fuse immediately blows out, there is a problem with the electrical system. Have your Toyota dealer correct it as soon as possible.

CAUTION

Never use a fuse with a higher amperage rating, or any other object, in place of a fuse. This may cause extensive damage and possibly a fire.

Adding washer fluid

If any washer does not work, the washer tank may be empty. Add washer fluid.

You may use plain water as washer fluid. However, in cold areas where temperatures range below freezing point, use washer fluid containing antifreeze. This product is available at your Toyota dealer and most auto parts stores. Follow the manufacturer’s directions for how much to mix with water.

NOTICE

Do not use engine antifreeze or any other substitute because it may damage your vehicle’s paint.

Checking the headlight aim

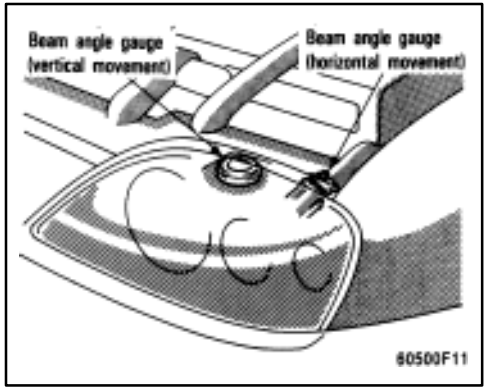

Before checking the headlight aim:

1. Be sure that the body around the headlight is not deformed.
2. Park the vehicle on a level spot.
3. The driver gets into the driver's seat and puts the vehicle in a state readying for a driving (with a full tank).
4. Bounce the vehicle several times

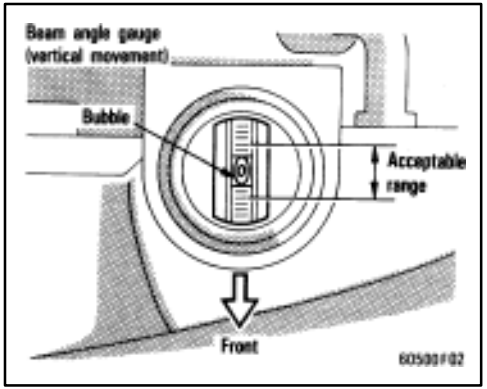

To check the headlight aim, check the vertical and horizontal gauges.

1. Look at the beam angle gauge (vertical movement). The bubble of the gauge should not deviate from the center of the gauge by more than two marks on either side of the gauge.

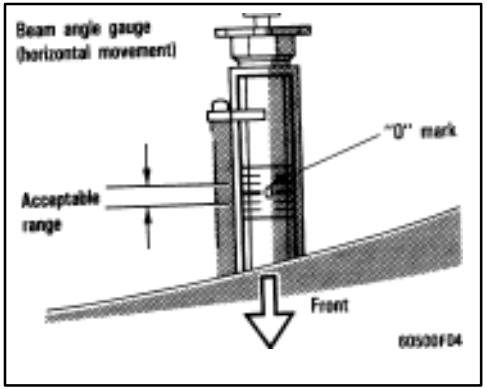

2. Look at the beam angle gauge (horizontal movement). The "0" mark should not deviate by more than one mark on either side of the gauge.

If the error is over the value specified above, take the vehicle to your Toyota dealer to adjust the headlight aim.

Replacing light bulbs—

The following illustrations show how to gain access to the bulbs. When replacing a bulb, make sure the ignition switch and light switch are off. Use bulbs with the wattage ratings given in the table.

CAUTION

Halogen bulbs have pressurized gas inside and require special handling. They can burst or shatter if scratched or dropped. Hold a bulb only by its plastic or metal case. Do not touch the glass part of a bulb with bare hands.

NOTICE

Only use a bulb of the listed type.

Light bulbs	Bulb No.	W	Type
Headlight (low beam)	9006	55	A
Headlight (high beam)	9005	65	B
Front fog lights	—	55	C
Parking lights	—	5	E
Front turn signal lights	7440	21	E
Front side marker lights	194	3.8	E
Rear side marker lights	194	3.8	E
Rear turn signal lights	7440	21	E
Stop and tail lights	7443	21/5	E
Back–up lights	7440	21	E
License plate light	—	5	E
Interior lights	—	8	D
Glovebox light	—	1.2	E
Luggage compartment light	—	5	F

A: HB4 halogen bulbs
B: HB3 halogen bulbs
C: H3 halogen bulbs
D: Single end bulbs
E: Wedge base bulbs
F: Double end bulbs

—Headlights (low beam)

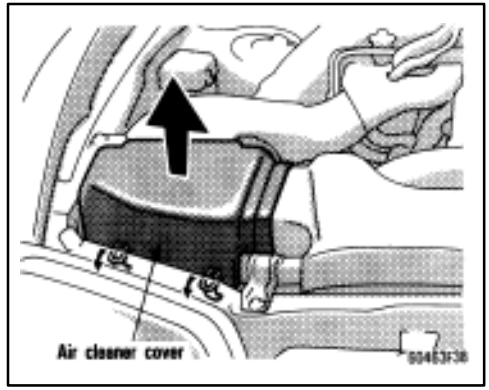

1. Open the hood.

RIGHT SIDE HEADLIGHT: Release the clips of the air cleaner and remove the air cleaner cover.

—Headlights (high beam)

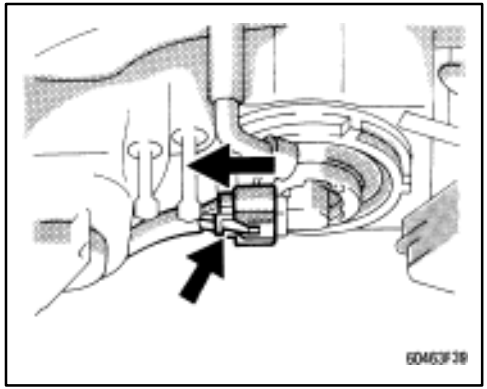

2. Unplug the connector while depressing the lock release.

If the connector is tight, wiggle it.

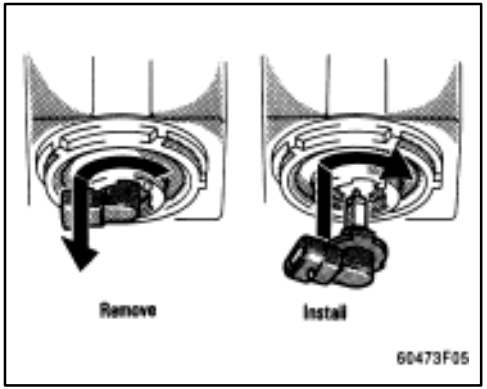

3. Turn the bulb clockwise and remove it. Install a new bulb, turn it counterclockwise, then plug in the connector.

To install a bulb, align the tab of the bulb socket with the cutouts of the mounting hole.

RIGHT SIDE HEADLIGHT: Install the air cleaner cover securely.

Aiming is not necessary after replacing the bulb. When aiming adjustment is necessary, contact your Toyota dealer.

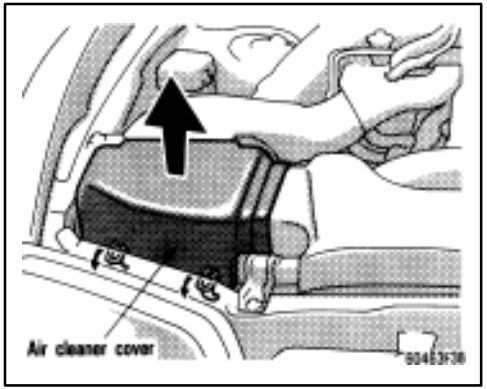

1. Open the hood.

RIGHT SIDE HEADLIGHT: Release the clips of the air cleaner and remove the air cleaner cover.

—Front fog lights

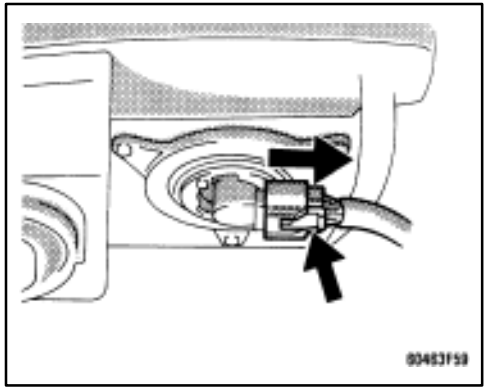

2. Unplug the connector while depressing the lock release.

If the connector is tight, wiggle it.

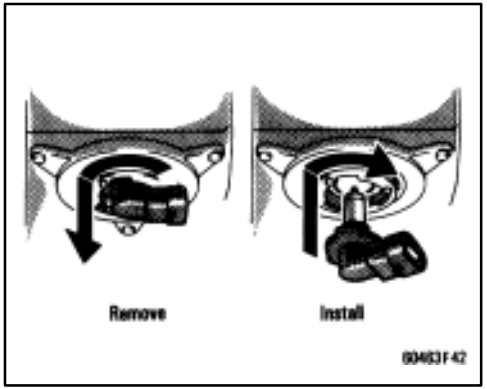

3. Turn the bulb counterclockwise and remove it. Install a new bulb, turn it clockwise, then plug in the connector.

To install a bulb, align the tab of the bulb socket with the cutouts of the mounting hole.

RIGHT SIDE HEADLIGHT: Install the air cleaner cover securely.

Aiming is not necessary after replacing the bulb. When aiming adjustment is necessary, contact your Toyota dealer.

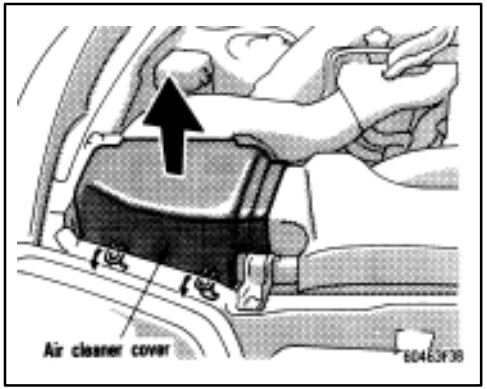

1. Open the hood.

RIGHT SIDE HEADLIGHT: Release the clips of the air cleaner and remove the air cleaner cover.

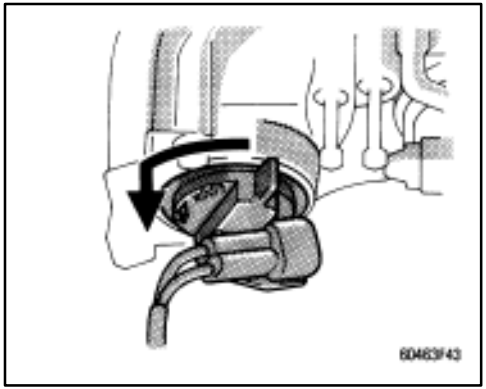

2. Turn the cover counterclockwise and remove it.

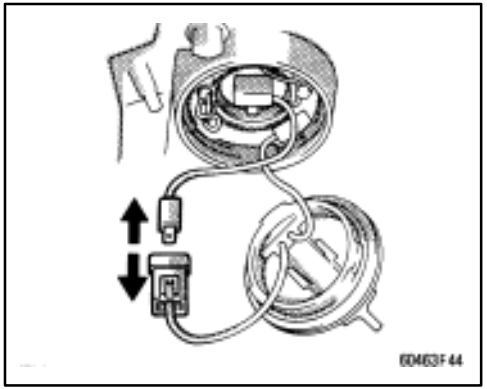

3. Disconnect the cords.

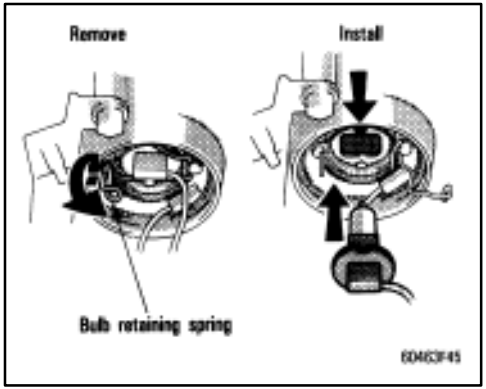

4. Release the bulb retaining spring and remove the bulb. Install a new bulb and the bulb retaining spring.

To install the bulb, align the cutouts of the bulb with the protrusions of the mounting hole.

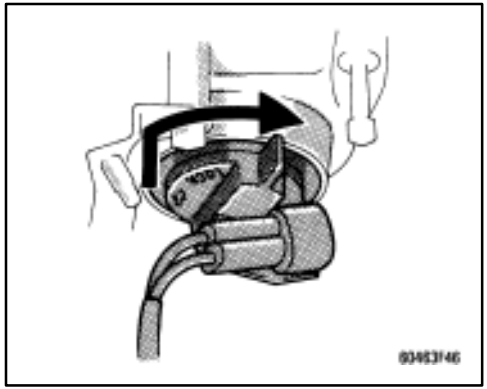

5. Connect the cords and install the cover by turning it clockwise.

RIGHT SIDE HEADLIGHT: Install the air cleaner cover securely.

—Parking lights

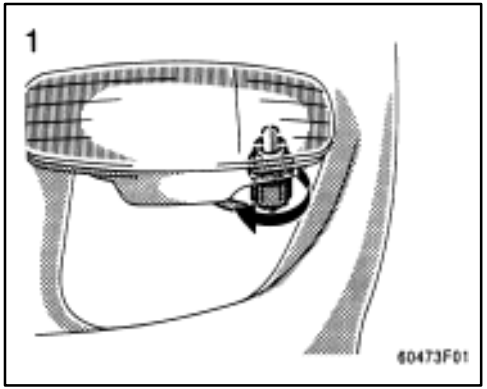

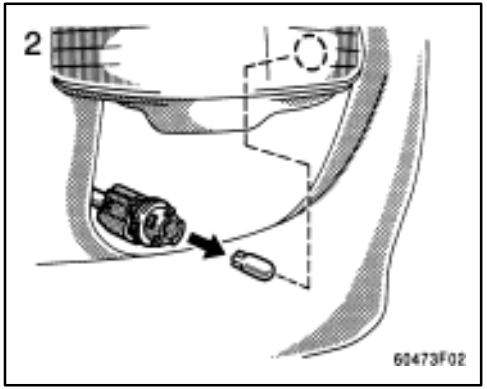

—Front turn signal lights

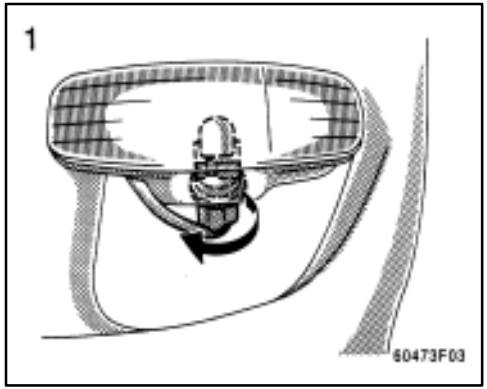

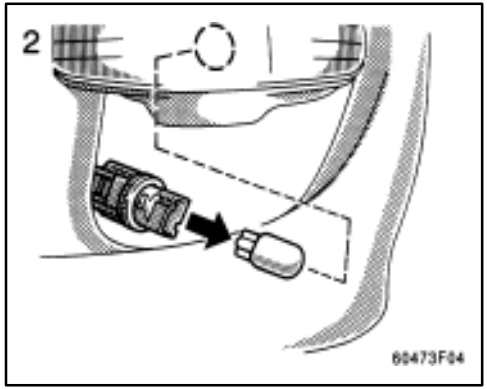

—Front side marker lights

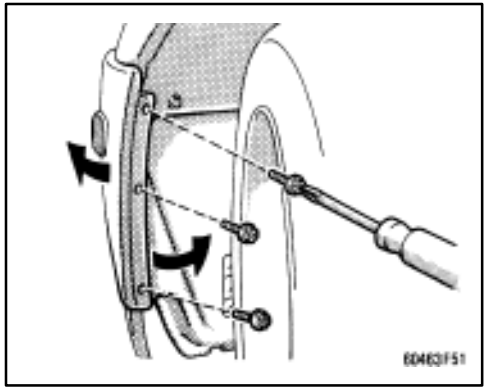

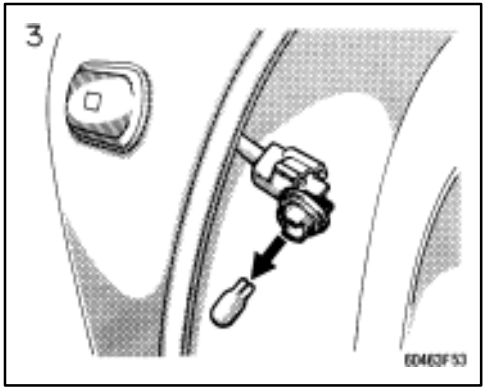

Use a Phillips–head screw driver

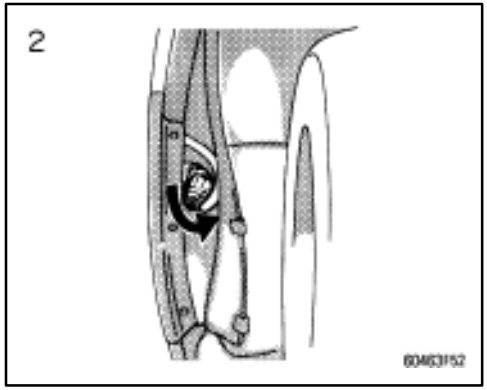

—Rear side marker lights

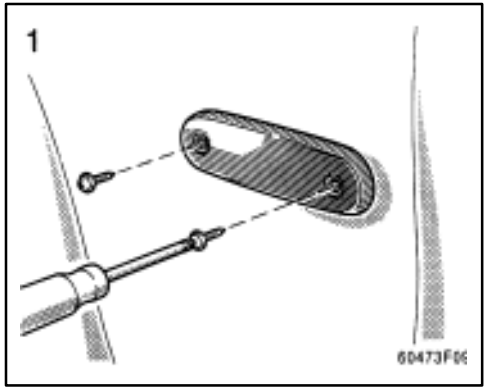

Use a Phillips–head screwdriver.

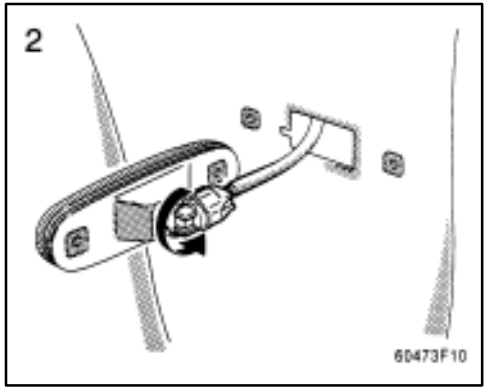

—Rear turn signal, stop and tail, and back–up lights

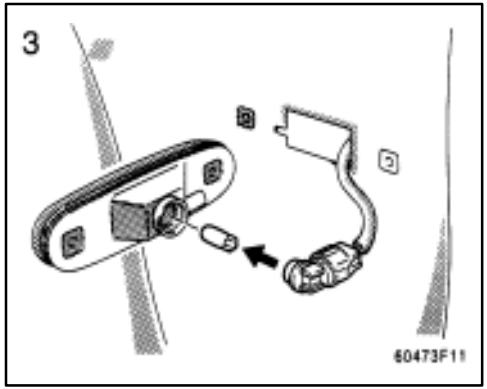

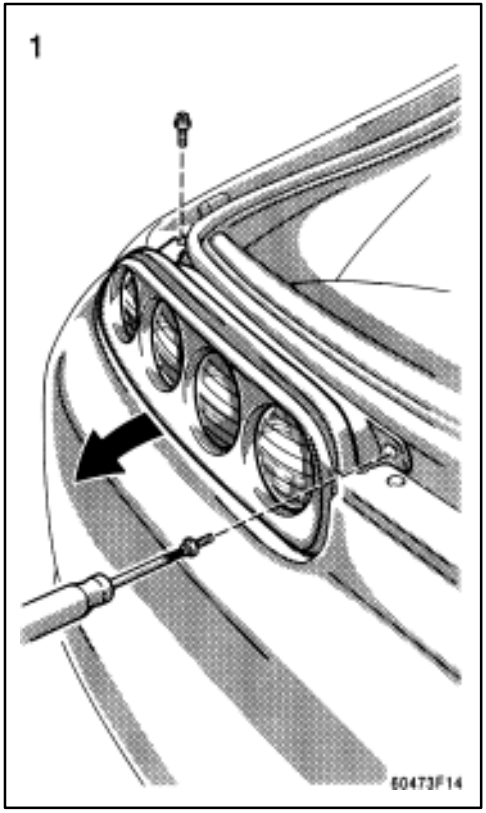

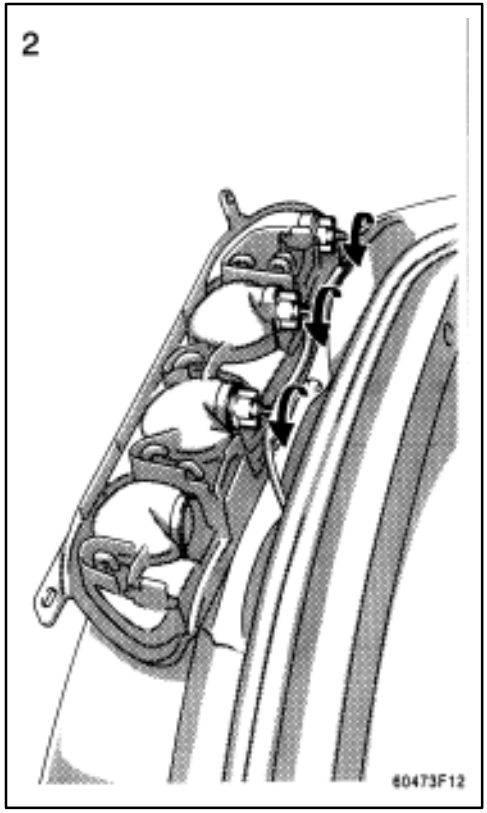

Use a Phillips–head screwdriver.

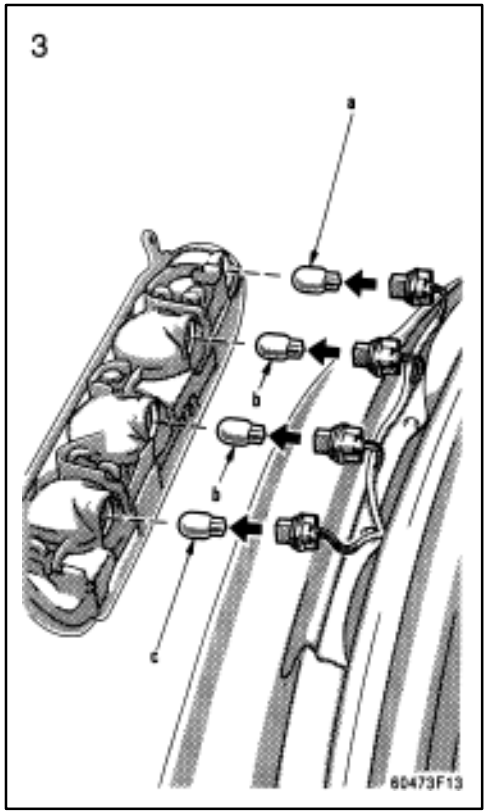

a: Rear turn signal light
b: Stop and tail light
c: Back–up light

—License plate lights

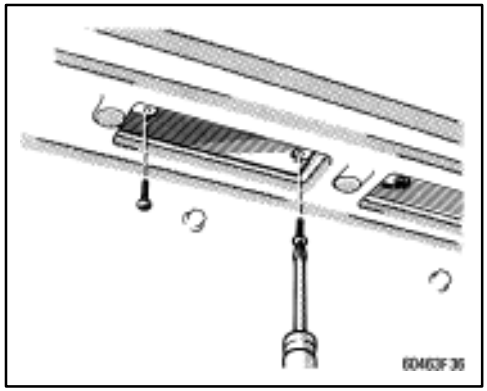

Use a Phillips–head screwdriver.

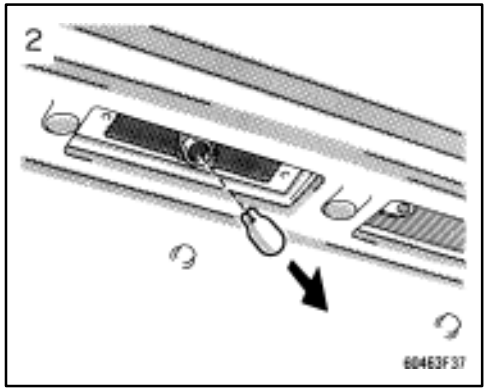

Part 8

SPECIFICATIONS

- Dimensions and weight
- Engine
- Fuel
- Service specifications
- Tires
- Fuses

Dimensions and weight

Overall length	mm (in.)	4515 (177.7)
Overall width	mm (in.)	1810 (71.3)
Overall height	mm (in.)	1275 (50.2)*
Wheelbase	mm (in.)	2550 (100.4)
Front tread	mm (in.)	1520 (59.9)
Rear tread	mm (in.)	1525 (60.1)
Vehicle capacity weight (occupants + luggage)	kg (lb.)	330 (725)

*: Unladen vehicle

Engine

Model:
- 2JZ–GE and 2JZ–GTE

Type:
- 2JZ–GE engine
  - 6 cylinder in line, 4 cycle, gasoline
- 2JZ–GTE engine
  - 6 cylinder in line, 4 cycle, gasoline (with turbocharger)

Bore and stroke, mm (in.):
- 86.0 x 86.0 (3.39 x 3.39)

Displacement, cm^3 (cu. in.):
- 2997 (182.9)

Fuel

Fuel type:

Premium unleaded gasoline, Research Octane Number 96 (Octane Rating 91) or higher

Fuel tank capacity, L (gal., Imp. gal.):

70 (18.5, 15.4)

Service specifications

ENGINE

Valve clearance (engine cold), mm (in.):

Intake	0.15—0.25 (0.006—0.010)
Exhaust	0.25—0.35 (0.010—0.014)

Spark plug type:

2JZ–GE engine	
NIPPONDENSO	PK16R11
NGK	BKR5EP11
2JZ–GTE engine	
NIPPONDENSO	PK20R11
NGK	BKR6EP11

Spark plug gap, mm (in.):

1.1 (0.043)

ENGINE LUBRICATION

Oil capacity (drain and refill), L (qt., Imp. qt.):

2JZ–GE engine	
With filter	5.2 (5.5, 4.6)
Without filter	4.9 (5.2, 4.3)
2JZ–GTE engine	
With filter	5.0 (5.3, 4.4)
Without filter	4.7 (5.0, 4.1)

Oil grade:

API SH, “Energy–Conserving II” multigrade engine oil or ILSAC multigrade engine oil

Recommended oil viscosity (SAE):

2JZ–GE engine

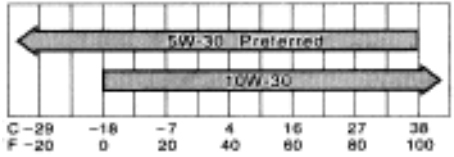

Temperature range anticipated before next oil change.

L70010

2JZ–GTE engine

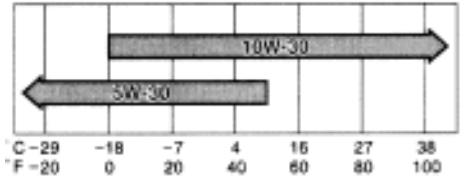

Temperature range anticipated before next oil change.

L70009

COOLING SYSTEM

Total capacity, L (qt., Imp. qt.):

2JZ–GE engine

With manual transmission

7.3 (7.7, 6.4)

With automatic transmission

8.3 (8.8, 7.3)

2JZ–GTE engine

With manual transmission

8.9 (9.4, 7.8)

With automatic transmission

8.8 (9.3, 7.7)

Coolant type:

With ethylene–glycol antifreeze

(Do not use alcohol type.)

BATTERY

Open voltage* at 20 ◀C (68 ◀F):

12.7 V Fully charged

12.3 V Half charged

11.9 V Discharged

*: Voltage that is checked 20 minutes after the key is removed with all the lights turned off

Charging rates:

5 A max.

CLUTCH

Pedal freeplay, mm (in.):

5—15 (0.2—0.6)

Fluid type:

SAE J1703 or FMVSS No. 116 DOT 3

MANUAL TRANSMISSION

Oil capacity, L (qt., Imp. qt.):

5–speed 2.6 (2.7, 2.3)

6–speed 1.8 (1.9, 1.6)

Oil type:

5–speed

Multipurpose gear oil API GL–4 or GL–5

6–speed

ESSO ATF DEXRON® D–21065, TOYOTA GEAR OIL V160 or equivalent

Recommended oil viscosity:

SAE 75W–90

AUTOMATIC TRANSMISSION

Fluid capacity (drain and refill),

L (qt., Imp. qt.):

2JZ–GE engine Up to 1.6 (1.7, 1.4)

2JZ–GTE engine Up to 1.9 (2.0, 1.7)

Fluid type:

2JZ–GE engine

Automatic transmission fluid D–II or DEXRON®III (DEXRON®II)

2JZ–GTE engine

Automatic transmission fluid TYPE T–II or equivalent

DIFFERENTIAL

Oil capacity, L (qt., Imp. qt.):

1.35 (1.43 1.19)

Oil type:

Hypoid gear oil API GL–5

Recommended oil viscosity:

Above –18°C (0°F)

SAE 90

Below –18°C (0°F)

SAE 80W or 80W–90

BRAKES

Minimum pedal clearance when depressed with the pressure of 490 N (50 kgf, 110 lbf) with the engine running, mm (in.):

2JZ–GE engine 72 (2.8)

2JZ–GTE engine 70 (2.8)

Pedal freeplay, mm (in.):
1—6 (0.04–0.24)
Pad wear limit, mm (in.):
1.0 (0.04)
Lining wear limit, mm (in.):
1.0 (0.04)
Parking brake adjustment when pulled with the force of 196 N (20 kgf, 44 lbf):
5—8 clicks
Fluid type:
SAE J1703 or FMVSS No. 116 DOT 3

STEERING

Wheel freeplay:
Less than 30 mm (1.2 in.)
Power steering fluid type:
Automatic transmission fluid DEXRON®II or III

Tires

Tire size:

Spare tire
T145/70 R 17
Except spare tire
2JZ–GE engine
225/50R 16 92V (for front use only)
245/45R 16 94V (for rear use only)
2JZ–GTE engine
235/45ZR 17 (for front use only)
255/40ZR 17 (for rear use only)

Tire pressure, kPa (kgf/cm^2 or bar, psi):

Spare tire	420 (4.2, 60)
Except spare tire	230 (2.3, 33)

Wheel size:

225/50R 16 92V	16 x 8JJ
245/45R 16 94V	16 x 9JJ
235/45ZR 17	17 x 8JJ
255/40ZR 17	17 x 9.5JJ
T145/70R 17	17 x 4T

Wheel nut torque, N·m (kgf·m, ft·lbf):
103 (10.5, 76)

Fuses

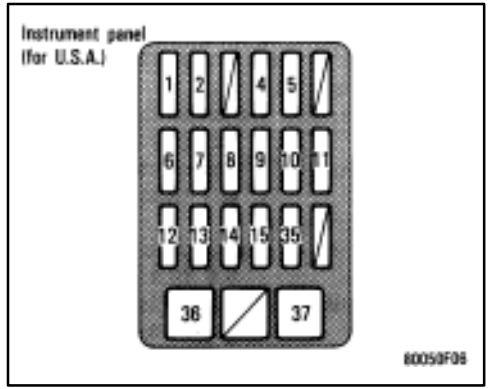

Fuses (type A)

1. **WIPER 20 A:** Windshield wipers and washer, rear window wiper and washer
2. **HTR 7.5 A:** Air conditioning system
3. **SEAT–HTR 15 A:** Seat heater
4. **ST 7.5 A:** Starter system
5. **IGN 7.5 A:** Charging system, discharge warning light, multiport fuel injection system/sequential multiport fuel injection system, SRS airbag system
6. **PANEL 10 A:** Instrument panel lights, instrument panel lights control
7. **MIR–HTR 10 A:** Mirror heaters
8. **TURN 7.5 A:** Turn signal lights

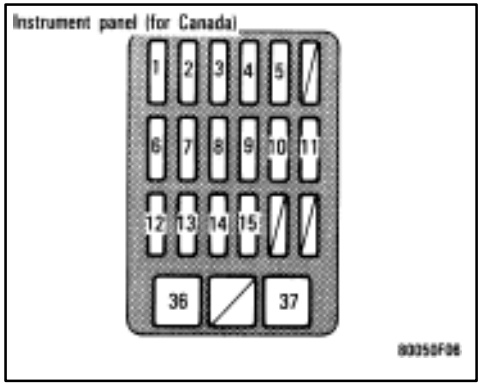

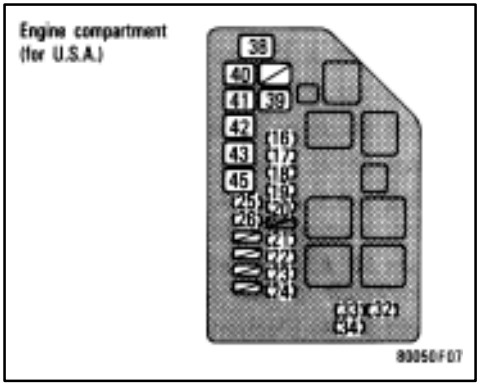

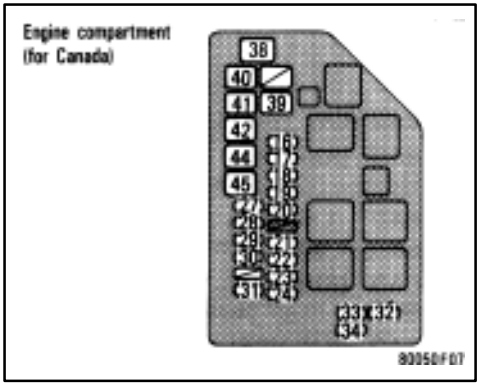

9. **STOP 15 A:** Stop lights, cruise control system cancel device
10. **CIG 15 A:** cigarette lighter, air conditioning system, SRS airbag system, theft deterrent system, shift lock control system
11. **RAD NO.2 7.5 A:** Radio, cassette tape player, power antenna
12. **TAIL 10 A:** Tail lights, parking lights, front side marker lights, rear side marker lights, licence plate lights
13. **ECU–IG 10A:** Cruise control system, anti–lock brake system, power steering, power antenna, theft deterrent system, shift lock control system, traction control system
14. **GAUGE 10A:** Gauges and meters, service reminder indicators and warning buzzers (except discharge and open door warning lights), rear window defogger, charging system, cruise control system, electronically controlled automatic transmission system, traction control system
15. **ECU–B 10 A:** Air conditioning system, cruise control system, anti–lock brake system, SRS airbag system, traction control system
16. **EFI NO.2 30 A):** Multiport fuel injection system/sequential multiport fuel injection system
17. **EFI NO.1 30A:** Multiport fuel injection system/sequential multiport fuel injection system
18. **AM2 30 A:** Starter system
19. **FOG 15 A:** Front fog lights
20. **HAZ–HORN 15 A:** Emergency flashers, horns
21. **TRAC 7.5 A:** Traction control system
22. **ALT–S 7.5 A:** Charging system
23. **DOME 7.5 A:** Interior lights, personal lights, door courtesy lights, luggage compartment light, ignition switch light, open door warning light, theft deterrent system, daytime running light system

24. **RAD NO.1 20 A:** Radio cassette tape player
25. **HEAD (RH) 15 A:** Right–hand headlight
26. **HEAD (LH) 15 A:** Left–hand headlight
27. **HEAD (RH–LWR) 15 A:** Right–hand headlight (low beam)
28. **HEAD (LH–LWR) 15 A:** Left–hand headlight (low beam)
29. **HEAD (RH–UPR) 15 A:** Right–hand headlight (high beam)
30. **HEAD (LH–UPR) 15 A:** Left–hand headlight (high beam)
31. **DRL 7.5 A:** Daytime running light system
32. **30 A:** Spare fuse
33. **7.5 A:** Spare fuse
34. **15 A:** Spare fuse
35. **OBD–II 7.5 A:** On–board diagnosis system

Fuses (type B)

36. **DOOR 30 A:** Power window, power door lock system, theft deterrent system
37. **DEFOG 30 A:** Rear window defogger

Fuses (type C)

38. **ALT 120 A:** Charging system
39. **MAIN 50 A:** Starter system, headlights
40. **HTR 50 A:** Air conditioning system
41. **FAN 30 A:** Electric cooling fan
42. **ABS NO.1 60 A:** Anti–lock brake system, traction control system
43. **AM1 50 A:** Electronic ignition system/ distributor ignition system
44. **AM1 60 A:** Electronic ignition system/ distributor ignition system
45. **POWER 60 A:** “PANEL”, “STOP”, “TAIL”, “ECU–B”, “DEFOG” and “DOOR” fuses

Part 9

REPORTING SAFETY DEFECTS FOR U.S. OWNERS AND UNIFORM TIRE QUALITY GRADING

® Reporting safety defects for U.S. owners

® Uniform tire quality grading

Reporting safety defects for U.S. owners

If you believe that your vehicle has a defect which could cause a crash or could cause injury or death, you should immediately inform the National Highway Traffic Safety Administration (NHTSA) in addition to notifying Toyota Motor Sales, U.S.A., Inc.

(Toll–free: 1–800–331–4331).

If NHTSA receives similar complaints, it may open a investigation, and if it finds that a safety defect exists in a group of vehicles, it may order a recall and remedy campaign. However, NHTSA cannot become involved in individual problems between you, your dealer, or Toyota Motor Sales, U.S.A., Inc.

To contact NHTSA, you may either call the Auto Safety Hotline tollfree at 1–800–424–9393 (or 366–0123 in Washington D.C. area) or write to: NHTSA. U.S. Department of Transportation. Washington D.C. 20590. You can also obtain other information about motor vehicle safety from the Hotline.

Uniform tire quality grading

This information has been prepared in accordance with regulations issued by the National Highway Traffic Safety Administration of the U.S. Department of Transportation. It provides the purchasers and/or prospective purchasers of Toyota vehicles with information on uniform tire quality grading.

Your Toyota dealer will help answer any questions you may have as you read this information.

DOT quality grades—All passenger vehicle tires must conform to Federal Safety Requirements in addition to these grades. These quality grades are molded on the sidewall.

Treadwear—The treadwear grade is a comparative rating based on the wear rate of the tire when tested under controlled conditions on a specified government test course. For example, a tire graded 150 would wear one and a half (1–1/2) times as well on the government course as a tire graded 100. The relative performance of tires depends upon the actual conditions of their use, however, and may depart significantly from the norm due to variations in driving habits, service practices and differences in road characteristics and climate.

Traction A, B, C—The traction grades, from highest to lowest, are A, B, and C, and they represent the tire's ability to stop on wet pavement as measured under controlled conditions on specified government test surfaces of asphalt and concrete. A tire marked C may have poor traction performance.

Warning: The traction grade assigned to this tire is based on braking (straight ahead) traction tests and does not include cornering (turning) traction.

Temperature A, B, C—The temperature grades are A (the highest), B, and C, representing the tire's resistance to the generation of heat and its ability to dissipate heat when tested under controlled conditions on a specific indoor laboratory test wheel. Sustained high temperature can cause the material of the tire to degenerate and reduce tire life, and excessive failure. The grade C corresponds to a level of performance which all passenger car tires must meet under the Federal Motor Vehicle Safety Standard No. 109. Grades B and A represent higher levels of performance on the laboratory test wheel than the minimum required by law.

Warning: The temperature grades for this tire are established for a tire that is properly inflated and not overloaded. Excessive speed, underinflation, or excessive loading, either separately or in combination, can cause heat buildup and possible tire failure.

Introduction

The scheduled maintenance information included in this supplement is provided as a guide to assist you in getting the greatest ownership value from your Toyota, while helping to maximize its performance, safety, and reliability. In addition to scheduled maintenance, your Toyota also requires ongoing general maintenance which includes checking fluid levels and simple visual inspections for potential signs of trouble. These items are explained separately in the "General Maintenance" section of your *Owner's Manual*.

How much scheduled maintenance **your** Toyota requires depends on how you drive, as well as the environmental conditions in which you drive. The demands on vehicles can vary significantly depending on the driver, driving conditions, and geographic location. The following pages will assist you in determining the proper amount of maintenance for your Toyota so that you won't have to pay for more maintenance than your Toyota needs. **Note:** Failure to properly maintain your vehicle can result in your warranty being voided either in whole or in part; please refer to the "New Vehicle Limited Warranty – Owner's Responsibilities" section of this supplement for details.

The Scheduled Maintenance Log beginning on page 34 of this supplement allows you to easily identify the maintenance requirements at each mileage (or month) interval, while also providing a convenient place to document your vehicle's maintenance history. Properly maintaining your Toyota and documenting its maintenance history can also help increase its resale value.

How to Use the Scheduled Maintenance Log

Oil Change Intervals

The Scheduled Maintenance Log has been designed to provide you with the flexibility to follow either **5,000**-mile or **7,500**-mile oil change intervals, depending on your circumstances.

- Use **5,000**-mile oil change intervals to help ensure proper engine lubrication under most driving conditions **or** for the following:
  - You **primarily** operate your Toyota under the "Special Operating Conditions" described on page 30 of this supplement.
  - Your Toyota is turbocharged.*
- Use **7,500**-mile oil change intervals if you **primarily** operate your **non**-turbocharged Toyota under light, non-commercial duty for distances greater than five miles in temperate climates (above freezing and below 90° F).

If you choose **5,000**-mile oil change intervals, simply follow the instructions printed in the non-shaded boxes as shown in this example:

5,000 MILES

If you choose **7,500**-mile oil change intervals, simply follow the instructions printed in the shaded boxes as shown in this example:

7,500 MILES

The **5,000**- and **7,500**-mile intervals coincide at 15,000-mile increments; therefore, both the shaded and non-shaded boxes are shown as in this example:

15,000 MILES
15,000 MILES

* **Note:** If a turbocharged Toyota is driven under the "Special Operating Conditions" described on page 30, then the oil change intervals should be further reduced to 2,500 miles.

Additional Maintenance Items for "Special Operating Conditions"

To assist you in getting the greatest ownership value from your Toyota, the Scheduled Maintenance Log separates the basic maintenance item requirements for most vehicles from the additional maintenance item requirements for vehicles that operate under more demanding "Special Operating Conditions."

For the majority of owners who operate their Toyotas for personal use under normal conditions, the basic maintenance items listed in the upper section of the maintenance box should provide all the maintenance your Toyota needs. If you operate your Toyota **primarily** in any of the more demanding "Special Operating Conditions" listed in the next column, you should have the additional maintenance items indicated in the maintenance box performed on your Toyota. If you only **occasionally** operate your vehicle under these conditions, it is **not** necessary to perform the additional maintenance items.

Note: If you meet the requirements for 7,500-mile oil change intervals as indicated in the previous section, your Toyota should **not** require the additional maintenance items.

Special Operating Conditions:

1. Towing a trailer or using a camper or car-top carrier.
2. Repeated short trips of less than five miles in temperatures below freezing.
3. Extensive idling or low-speed driving for long distances as in heavy commercial use, such as delivery, taxi, or patrol car.
4. Operating on rough, muddy, or salt-covered roads.
5. Operating on unpaved or dusty roads.

Note: Turbocharged vehicles that are driven under the "Special Operating Conditions" listed above should change their engine oil at 2,500-mile intervals. It is not necessary, however, to change the oil filter at 2,500-mile intervals. Both the engine oil and filter should be replaced at the 5,000-mile intervals.

Example:

- Change **engine oil only** at 2,500, 7,500, 12,500…miles.
- Change engine oil **and filter** at 5,000, 10,000, 15,000…miles.

Explanation of Scheduled Maintenance Items

The following explanations are provided to give you a greater awareness and understanding of the individual maintenance items that should be performed on your Toyota to help ensure long life and top operating condition. The Scheduled Maintenance Log in the next section of this supplement identifies which of these maintenance items should be performed at each mileage/month interval.

Engine Components and Emission Control Systems

Timing Belt

If the vehicle is operated under extensive idling or low-speed driving for long distances as in heavy commercial use such as delivery, taxi, or patrol car, replace the timing belt every 60,000 miles. A qualified technician should perform this operation.

Valve Clearance

Inspect for excessive tappet noise and/or engine vibration and adjust if necessary. A qualified technician should perform this operation.

Drive Belts

Inspect the drive belts for cracks, excessive wear, or oiliness. Replace the belts if damaged, and check the belt tension and adjust it if necessary. After inspection at 60,000 miles or 48 months, inspect every 15,000 miles or 12 months.

Engine Oil and Oil Filter

Change the engine oil and oil filter when scheduled. Use API SH, Energy-Conserving II multigrade engine oil or ILSAC multigrade engine oil. For recommended viscosity, please refer to your *Owner's Manual*.

Engine Coolant

Drain and flush the cooling system when scheduled. Refill only with an ethylene-glycol type coolant. A qualified technician should perform this operation.

Exhaust Pipes and Mountings

Visually inspect the exhaust pipes, muffler, and hangers for cracks, deterioration, or damage. Start the engine and listen carefully for any exhaust gas leakage. Tighten connections or replace parts as necessary.

Engine Air Filter

Replace the engine air cleaner filter when scheduled.

Fuel Lines and Connections, Fuel Tank Vapor Vent System Hoses, and Fuel Tank Band
Visually inspect the lines, connections, hoses, and tank band for corrosion, damage, cracks, and loose or leaking connections. Tighten connections or replace parts as necessary.

Fuel Tank Cap Gasket
Visually inspect the fuel tank cap gasket for cracks, deterioration, or damage, and replace if necessary.

Spark Plugs
Install new plugs of the same type as originally equipped. A qualified technician should perform this operation.

Charcoal Canister
Inspect for internal damage or clogging as scheduled. Clean with compressed air or replace if necessary. A qualified technician should perform this operation.

Chassis and Body

Tire Rotation
To equalize tire wear and help extend tire life, Toyota recommends that you rotate your tires every 5,000 to 7,500 miles. However, the most appropriate timing for tire rotation may vary according to your driving habits and road surface conditions.

Brake Linings (Shoes and Pads), Drums and Discs
Check the brake linings (shoes) and drums for scoring, burning, leaking fluid, broken parts, and excessive wear. Check the pads for excessive wear and discs for runout and wear, and leaking fluid. A qualified technician should perform this operation.

Brake Lines and Hoses
Visually check for proper installation. Check for chafing, cracks, deterioration, and any evidence of leaking. Replace any deteriorated or damaged parts immediately. A qualified technician should perform these operations.

Steering Linkage
With the vehicle stopped, check for excessive freeplay in the steering wheel. Check the linkage for bending or damage. Check the dust boots for deterioration, cracks, or damage. Replace any damaged parts.

SRS Air Bags
After initial inspection at 120 months from the manufacture date on the certification label, inspect every 24 months. A qualified technician should perform this operation.

Rack and Pinion Assembly
Inspect the rack and pinion assemblies for signs of leakage. If you discover any leakage, have it repaired immediately by a qualified technician.

Ball Joints and Dust Covers
Check the suspension and steering linkage ball joints for looseness or damage. Check all dust covers for deterioration or damage. A qualified technician should perform this operation.

Drive Shaft Boots
Check the drive shaft boots and clamps for cracks, deterioration, or damage. Replace any damaged parts and, if necessary, repack the grease. For Camry, Avalon, and Supra, also re-torque the flange bolts (drive shaft to differential or side gear shaft). A qualified technician should perform these operations.

Manual Transmission Oil
Inspect each component for signs of leakage when scheduled. If you discover any leakage, have it repaired by a qualified technician immediately. If the vehicle is operated under the "Special Operating Conditions" defined on page 30 of this supplement, change the oil when scheduled.

Automatic Transmission and Differential Oil
Inspect each component for signs of leakage when scheduled. If you discover any leakage, have it repaired by a qualified technician immediately. If the vehicle is operated under the "Special Operating Conditions" defined on page 30 of this supplement, change the oil when scheduled.

Limited-Slip Differential Oil
Inspect every 15,000 miles or 12 months. Replace every 30,000 miles or 24 months. A qualified technician should perform this operation.

Wheel Bearing Grease
Repack the wheel bearings with wheel bearing grease.

Bolts and Nuts on Chassis and Body
If the vehicle is operated under the "Special Operating Conditions" defined on page 30 of this supplement, re-tighten the seat mounting bolts and front and rear suspension member retaining bolts to specified torque.

MAINTENANCE LOG

5,000 Miles or 4 Months*

☐ Replace engine oil and oil filter
☐ Rotate tires

Additional Maintenance Items for Special Operating Conditions:
Please refer to page 30 of this supplement to determine if your Toyota requires the additional maintenance items.

☐ Inspect the following:

__ Air filter
__ Brake: linings, discs/drums
__ Steering linkages
__ Ball joints and dust covers
__ Drive shaft boots (re-torque flange bolts)
__ Body/chassis nuts and bolts

Dealer Service Verification

Date: _____

Mileage:_____

10,000 Miles or 8 Months*

☐ Replace engine oil and oil filter
☐ Rotate tires

Additional Maintenance Items for Special Operating Conditions:
Please refer to page 30 of this supplement to determine if your Toyota requires the additional maintenance items.

☐ Inspect the following:

__ Air filter
__ Brake: linings, discs/drums
__ Steering linkages
__ Ball joints and dust covers
__ Drive shaft boots (re-torque flange bolts)
__ Body/chassis nuts and bolts

Dealer Service Verification

Date: _____

Mileage:_____

7,500 Miles or 6 Months*

☐ Replace engine oil and oil filter
☐ Rotate tires

Dealer Service Verification

Date:_____

Mileage:_____

*Use the white background boxes to follow 5,000-mile oil change intervals or the shaded background boxes to follow 7,500-mile oil change intervals. Please refer to page 29 of this supplement for further information and to determine which interval is right for your driving circumstances.

5,000-Mile Oil Change Intervals

7,500-Mile Oil Change Intervals

15,000 Miles or 12 Months*

15,000 Miles or 12 Months*

☐ Replace engine oil and oil filter
☐ Rotate tires
☐ Inspect the following:

__ Exhaust pipes and mountings
__ Brake: linings, discs/drums, lines, hoses
__ Steering linkages
__ Rack and pinion assy. for leakage
__ Ball joints and dust covers
__ Drive shaft boots (re-torque flange bolts)
__ Automatic transmission and differential oil
__ Limited-slip differential oil (Supra)

Additional Maintenance Items for Special Operating Conditions:
Please refer to page 30 of this supplement to determine if your Toyota requires the additional maintenance items.

☐ Inspect air filter
☐ Replace automatic transmission and differential oil
☐ Inspect body/chassis nuts and bolts

Dealer Service Verification

Date: _____

Mileage:_____

MAINTENANCE LOG

20,000 Miles or 16 Months*

☐ Replace engine oil and oil filter
☐ Rotate tires

Additional Maintenance Items for Special Operating Conditions:
Please refer to page 30 of this supplement to determine if your Toyota requires the additional maintenance items.

☐ Inspect the following:

__ Air filter
__ Brake: linings, discs/drums
__ Steering linkages
__ Ball joints and dust covers
__ Drive shaft boots (re-torque flange bolts)
__ Body/chassis nuts and bolts

Dealer Service Verification

Date: _____

Mileage:_____

25,000 Miles or 20 Months*

☐ Replace engine oil and oil filter
☐ Rotate tires

Additional Maintenance Items for Special Operating Conditions:
Please refer to page 30 of this supplement to determine if your Toyota requires the additional maintenance items.

☐ Inspect the following:

__ Air filter
__ Brake: linings, discs/drums
__ Steering linkages
__ Ball joints and dust covers
__ Drive shaft boots (re-torque flange bolts)
__ Body/chassis nuts and bolts

Dealer Service Verification

Date: _____

Mileage:_____

22,500 Miles or 18 Months*

☐ Replace engine oil and oil filter
☐ Rotate tires

Dealer Service Verification

Date:_____

Mileage:_____

*Use the white background boxes to follow 5,000-mile oil change intervals or the shaded background boxes to follow 7,500-mile oil change intervals. Please refer to page 29 of this supplement for further information and to determine which interval is right for your driving circumstances.

5,000-Mile Oil Change Intervals

7,500-Mile Oil Change Intervals

30,000 Miles or 24 Months*

30,000 Miles or 24 Months*

- ☐ Replace engine oil and oil filter
- ☐ Rotate tires
- ☐ Replace engine air filter
- ☐ Replace non-platinum spark plugs[1] – Celica (7AFE), Corolla, Paseo, Tercel
- ☐ Replace engine coolant
- ☐ Repack rear wheel bearings (Tercel, Paseo)
- ☐ Replace limited-slip differential oil (Supra)

☐ Inspect the following:

- __ Fuel lines and connections, fuel tank vapor vent system hoses, fuel tank band
- __ Fuel tank cap gasket
- __ Exhaust pipes and mountings
- __ Brake: linings, discs/drums, lines, hoses
- __ Steering linkages
- __ Rack and pinion assy. for leakage
- __ Ball joints and dust covers
- __ Drive shaft boots (re-torque flange bolts)
- __ Transmission and differential oil

Additional Maintenance Items for Special Operating Conditions:

Please refer to page 30 of this supplement to determine if your Toyota requires the additional maintenance items.

- ☐ Replace transmission and differential oil
- ☐ Inspect body/chassis nuts and bolts

Dealer Service Verification

Date: _____

Mileage: _____

[1] Maintenance service is required under the terms of the Emission Control Warranty.

MAINTENANCE LOG

35,000 Miles or 28 Months*

☐ Replace engine oil and oil filter
☐ Rotate tires

Additional Maintenance Items for Special Operating Conditions:
Please refer to page 30 of this supplement to determine if your Toyota requires the additional maintenance items.

☐ Inspect the following:

__ Air filter
__ Brake: linings, discs/drums
__ Steering linkages
__ Ball joints and dust covers
__ Drive shaft boots (re-torque flange bolts)
__ Body/chassis nuts and bolts

Dealer Service Verification

Date: _____

Mileage:_____

40,000 Miles or 32 Months*

☐ Replace engine oil and oil filter
☐ Rotate tires

Additional Maintenance Items for Special Operating Conditions:
Please refer to page 30 of this supplement to determine if your Toyota requires the additional maintenance items.

☐ Inspect the following:

__ Air filter
__ Brake: linings, discs/drums
__ Steering linkages
__ Ball joints and dust covers
__ Drive shaft boots (re-torque flange bolts)
__ Body/chassis nuts and bolts

Dealer Service Verification

Date: _____

Mileage:_____

37,500 Miles or 30 Months*

☐ Replace engine oil and oil filter
☐ Rotate tires

Dealer Service Verification

Date:_____

Mileage:_____

*Use the white background boxes to follow 5,000-mile oil change intervals or the shaded background boxes to follow 7,500-mile oil change intervals. Please refer to page 29 of this supplement for further information and to determine which interval is right for your driving circumstances.

5,000-Mile Oil Change Intervals

7,500-Mile Oil Change Intervals

45,000 Miles or 36 Months*

45,000 Miles or 36 Months*

☐ Replace engine oil and oil filter
☐ Rotate tires
☐ Inspect the following:

__ Exhaust pipes and mountings
__ Brake: linings, discs/drums, lines, hoses
__ Steering linkages
__ Rack and pinion assy. for leakage
__ Ball joints and dust covers
__ Drive shaft boots (re-torque flange bolts)
__ Automatic transmission and differential oil
__ Limited-slip differential oil (Supra)

Additional Maintenance Items for Special Operating Conditions:
Please refer to page 30 of this supplement to determine if your Toyota requires the additional maintenance items.

☐ Inspect air filter
☐ Replace automatic transmission and differential oil
☐ Inspect body/chassis nuts and bolts

Dealer Service Verification

Date: _____

Mileage:_____

MAINTENANCE LOG

50,000 Miles or 40 Months*

☐ Replace engine oil and oil filter
☐ Rotate tires

Additional Maintenance Items for Special Operating Conditions:
Please refer to page 30 of this supplement to determine if your Toyota requires the additional maintenance items.

☐ Inspect the following:

__ Air filter
__ Brake: linings, discs/drums
__ Steering linkages
__ Ball joints and dust covers
__ Drive shaft boots (re-torque flange bolts)
__ Body/chassis nuts and bolts

Dealer Service Verification

Date: _____

Mileage:_____

55,000 Miles or 44 Months*

☐ Replace engine oil and oil filter
☐ Rotate tires

Additional Maintenance Items for Special Operating Conditions:
Please refer to page 30 of this supplement to determine if your Toyota requires the additional maintenance items.

☐ Inspect the following:

__ Air filter
__ Brake: linings, discs/drums
__ Steering linkages
__ Ball joints and dust covers
__ Drive shaft boots (re-torque flange bolts)
__ Body/chassis nuts and bolts

Dealer Service Verification

Date: _____

Mileage:_____

52,500 Miles or 42 Months*

☐ Replace engine oil and oil filter
☐ Rotate tires

Dealer Service Verification

Date:_____

Mileage:_____

*Use the white background boxes to follow 5,000-mile oil change intervals or the shaded background boxes to follow 7,500-mile oil change intervals. Please refer to page 29 of this supplement for further information and to determine which interval is right for your driving circumstances.

5,000-Mile Oil Change Intervals

7,500-Mile Oil Change Intervals

60,000 Miles or 48 Months*

60,000 Miles or 48 Months*

- ☐ Replace engine oil and oil filter
- ☐ Rotate tires
- ☐ Replace engine air filter
- ☐ Replace spark plugs[1]
- ☐ Replace engine coolant
- ☐ Repack rear wheel bearings (Tercel, Paseo)
- ☐ Replace limited-slip differential oil (Supra)

☐ Inspect the following:

- __ Valves (audible inspection), adjust if necessary
- __ Drive belts
- __ Fuel lines and connections, fuel tank vapor vent system hoses, fuel tank band
- __ Fuel tank cap gasket
- __ Charcoal canister (72 months)[2]
- __ Exhaust pipes and mountings
- __ Brake: linings, discs/drums, lines, hoses
- __ Steering linkages
- __ Rack and pinion assy. for leakage
- __ Ball joints and dust covers
- __ Drive shaft boots (re-torque flange bolts)
- __ Transmission and differential oil

Additional Maintenance Items for Special Operating Conditions:

Please refer to page 30 of this supplement to determine if your Toyota requires the additional maintenance items.

- ☐ Replace timing belt[3]
- ☐ Replace transmission and differential oil
- ☐ Inspect body/chassis nuts and bolts

Dealer Service Verification

Date: _____

Mileage: _____

[1] Maintenance service is required under the terms of the Emission Control Warranty.

[2] Non-maintenance item except for CA, MA, NY.

[3] Timing belt replacement only required for Special Operating Condition 3 as indicated on page 30 of this supplement.

MAINTENANCE LOG

65,000 Miles or 52 Months*

☐ Replace engine oil and oil filter
☐ Rotate tires

Additional Maintenance Items for Special Operating Conditions:
Please refer to page 30 of this supplement to determine if your Toyota requires the additional maintenance items.

☐ Inspect the following:

__ Air filter
__ Brake: linings, discs/drums
__ Steering linkages
__ Ball joints and dust covers
__ Drive shaft boots (re-torque flange bolts)
__ Body/chassis nuts and bolts

Dealer Service Verification

Date: _____

Mileage:_____

70,000 Miles or 56 Months*

☐ Replace engine oil and oil filter
☐ Rotate tires

Additional Maintenance Items for Special Operating Conditions:
Please refer to page 30 of this supplement to determine if your Toyota requires the additional maintenance items.

☐ Inspect the following:

__ Air filter
__ Brake: linings, discs/drums
__ Steering linkages
__ Ball joints and dust covers
__ Drive shaft boots (re-torque flange bolts)
__ Body/chassis nuts and bolts

Dealer Service Verification

Date: _____

Mileage:_____

67,500 Miles or 54 Months*

☐ Replace engine oil and oil filter
☐ Rotate tires

Dealer Service Verification

Date:_____

Mileage:_____

*Use the white background boxes to follow 5,000-mile oil change intervals or the shaded background boxes to follow 7,500-mile oil change intervals. Please refer to page 29 of this supplement for further information and to determine which interval is right for your driving circumstances.

5,000-Mile Oil Change Intervals

7,500-Mile Oil Change Intervals

75,000 Miles or 60 Months*

75,000 Miles or 60 Months*

☐ Replace engine oil and oil filter
☐ Rotate tires
☐ Inspect the following:

__ Exhaust pipes and mountings
__ Brake: linings, discs/drums, lines, hoses
__ Steering linkages
__ Rack and pinion assy. for leakage
__ Ball joints and dust covers
__ Drive shaft boots (re-torque flange bolts)
__ Automatic transmission and differential oil
__ Limited-slip differential oil (Supra)

Additional Maintenance Items for Special Operating Conditions:
Please refer to page 30 of this supplement to determine if your Toyota requires the additional maintenance items.

☐ Inspect air filter
☐ Replace automatic transmission and differential oil
☐ Inspect body/chassis nuts and bolts

Dealer Service Verification

Date: _____

Mileage:_____

MAINTENANCE LOG

80,000 Miles or 64 Months*

☐ Replace engine oil and oil filter
☐ Rotate tires

Additional Maintenance Items for Special Operating Conditions:
Please refer to page 30 of this supplement to determine if your Toyota requires the additional maintenance items.

☐ Inspect the following:
- __ Air filter
- __ Brake: linings, discs/drums
- __ Steering linkages
- __ Ball joints and dust covers
- __ Drive shaft boots (re-torque flange bolts)
- __ Body/chassis nuts and bolts

Dealer Service Verification

Date: _____

Mileage:_____

85,000 Miles or 68 Months*

☐ Replace engine oil and oil filter
☐ Rotate tires

Additional Maintenance Items for Special Operating Conditions:
Please refer to page 30 of this supplement to determine if your Toyota requires the additional maintenance items.

☐ Inspect the following:
- __ Air filter
- __ Brake: linings, discs/drums
- __ Steering linkages
- __ Ball joints and dust covers
- __ Drive shaft boots (re-torque flange bolts)
- __ Body/chassis nuts and bolts

Dealer Service Verification

Date: _____

Mileage:_____

82,500 Miles or 66 Months*

☐ Replace engine oil and oil filter
☐ Rotate tires

Dealer Service Verification

Date:_____

Mileage:_____

*Use the white background boxes to follow 5,000-mile oil change intervals or the shaded background boxes to follow 7,500-mile oil change intervals. Please refer to page 29 of this supplement for further information and to determine which interval is right for your driving circumstances.

5,000-Mile Oil Change Intervals

7,500-Mile Oil Change Intervals

90,000 Miles or 72 Months*

90,000 Miles or 72 Months*

- ☐ Replace engine oil and oil filter
- ☐ Rotate tires
- ☐ Replace engine air filter
- ☐ Replace non-platinum spark plugs[1] – Celica (7AFE), Corolla, Paseo, Tercel
- ☐ Replace engine coolant
- ☐ Repack rear wheel bearings (Tercel, Paseo)
- ☐ Replace limited-slip differential oil (Supra)

☐ Inspect the following:

- __ Drive belts
- __ Fuel lines and connections, fuel tank vapor vent system hoses, fuel tank band
- __ Fuel tank cap gasket
- __ Exhaust pipes and mountings
- __ Brake: linings, discs/drums, lines, hoses
- __ Steering linkages
- __ Rack and pinion assy. for leakage
- __ Ball joints and dust covers
- __ Drive shaft boots (re-torque flange bolts)
- __ Transmission and differential oil

Additional Maintenance Items for Special Operating Conditions:

Please refer to page 30 of this supplement to determine if your Toyota requires the additional maintenance items.

- ☐ Replace transmission and differential oil
- ☐ Inspect body/chassis nuts and bolts

Dealer Service Verification

Date: _____

Mileage:_____

[1] Maintenance service is required under the terms of the Emission Control Warranty.

MAINTENANCE LOG

95,000 Miles or 76 Months*

☐ Replace engine oil and oil filter
☐ Rotate tires

Additional Maintenance Items for Special Operating Conditions:
Please refer to page 30 of this supplement to determine if your Toyota requires the additional maintenance items.

☐ Inspect the following:

__ Air filter
__ Brake: linings, discs/drums
__ Steering linkages
__ Ball joints and dust covers
__ Drive shaft boots (re-torque flange bolts)
__ Body/chassis nuts and bolts

Dealer Service Verification

Date: _____

Mileage:_____

100,000 Miles or 80 Months*

☐ Replace engine oil and oil filter
☐ Rotate tires

Additional Maintenance Items for Special Operating Conditions:
Please refer to page 30 of this supplement to determine if your Toyota requires the additional maintenance items.

☐ Inspect the following:

__ Air filter
__ Brake: linings, discs/drums
__ Steering linkages
__ Ball joints and dust covers
__ Drive shaft boots (re-torque flange bolts)
__ Body/chassis nuts and bolts

Dealer Service Verification

Date: _____

Mileage:_____

97,500 Miles or 78 Months*

☐ Replace engine oil and oil filter
☐ Rotate tires

Dealer Service Verification

Date:_____

Mileage:_____

*Use the white background boxes to follow 5,000-mile oil change intervals or the shaded background boxes to follow 7,500-mile oil change intervals. Please refer to page 29 of this supplement for further information and to determine which interval is right for your driving circumstances.

5,000-Mile Oil Change Intervals

7,500-Mile Oil Change Intervals

105,000 Miles or 84 Months*

105,000 Miles or 84 Months*

☐ Replace engine oil and oil filter
☐ Rotate tires
☐ Inspect the following:

__ Drive belts
__ Exhaust pipes and mountings
__ Brake: linings, discs/drums, lines, hoses
__ Steering linkages
__ Rack and pinion assy. for leakage
__ Ball joints and dust covers
__ Drive shaft boots (re-torque flange bolts)
__ Automatic transmission and differential oil
__ Limited-slip differential oil (Supra)

Additional Maintenance Items for Special Operating Conditions:
Please refer to page 30 of this supplement to determine if your Toyota requires the additional maintenance items.

☐ Inspect air filter
☐ Replace automatic transmission and differential oil
☐ Inspect body/chassis nuts and bolts

Dealer Service Verification

Date: _____

Mileage:_____

MAINTENANCE LOG

110,000 Miles or 88 Months*

☐ Replace engine oil and oil filter
☐ Rotate tires

Additional Maintenance Items for Special Operating Conditions:
Please refer to page 30 of this supplement to determine if your Toyota requires the additional maintenance items.

☐ Inspect the following:
- __ Air filter
- __ Brake: linings, discs/drums
- __ Steering linkages
- __ Ball joints and dust covers
- __ Drive shaft boots (re-torque flange bolts)
- __ Body/chassis nuts and bolts

Dealer Service Verification

Date: _____

Mileage:_____

115,000 Miles or 92 Months*

☐ Replace engine oil and oil filter
☐ Rotate tires

Additional Maintenance Items for Special Operating Conditions:
Please refer to page 30 of this supplement to determine if your Toyota requires the additional maintenance items.

☐ Inspect the following:
- __ Air filter
- __ Brake: linings, discs/drums
- __ Steering linkages
- __ Ball joints and dust covers
- __ Drive shaft boots (re-torque flange bolts)
- __ Body/chassis nuts and bolts

Dealer Service Verification

Date: _____

Mileage:_____

112,500 Miles or 90 Months*

☐ Replace engine oil and oil filter
☐ Rotate tires

Dealer Service Verification

Date:_____

Mileage:_____

*Use the white background boxes to follow 5,000-mile oil change intervals or the shaded background boxes to follow 7,500-mile oil change intervals. Please refer to page 29 of this supplement for further information and to determine which interval is right for your driving circumstances.

5,000-Mile Oil Change Intervals

7,500-Mile Oil Change Intervals

120,000 Miles or 96 Months*

120,000 Miles or 96 Months*

- ☐ Replace engine oil and oil filter
- ☐ Rotate tires
- ☐ Replace engine air filter
- ☐ Replace spark plugs[1]
- ☐ Replace engine coolant
- ☐ Repack rear wheel bearings (Tercel, Paseo)
- ☐ Replace limited-slip differential oil (Supra)

☐ Inspect the following:

- __ Valves (audible inspection), adjust if necessary
- __ Drive belts
- __ Fuel lines and connections, fuel tank vapor vent system hoses, fuel tank band
- __ Fuel tank cap gasket
- __ Charcoal canister (144 months)[2]
- __ Exhaust pipes and mountings
- __ Brake: linings, discs/drums, lines, hoses
- __ Steering linkages
- __ Rack and pinion assy. for leakage
- __ Ball joints and dust covers
- __ Drive shaft boots (re-torque flange bolts)
- __ Transmission and differential oil

Additional Maintenance Items for Special Operating Conditions:

Please refer to page 30 of this supplement to determine if your Toyota requires the additional maintenance items.

- ☐ Replace timing belt[3]
- ☐ Replace transmission and differential oil
- ☐ Inspect body/chassis nuts and bolts

Dealer Service Verification

Date: _____

Mileage:_____

120 Months

120 Months

☐ Inspect SRS Air Bag

Dealer Service Verification

Date: _____

Mileage: _____

[1] Maintenance service is required under the terms of the Emission Control Warranty.

[2] Non-maintenance item except for CA, MA, NY.

[3] Timing belt replacement only required for Special Operating Condition 3 as indicated on page 30 of this supplement.

SERVICE MANUALS

50

Official Toyota Service Manuals

You may prefer to do some of your own service work on your Toyota. Or, you may want to be more knowledgeable when you talk about your Toyota with the service writer or service manager at the dealership. In either case, we have the service manuals with the information you need.

A complete line of Service Manuals is available for your Toyota, including the Repair Manual, Electrical Wiring Diagram, Automatic Transmission/Transaxle Repair Manual, and replacement *Owner's Manuals*, if needed.

For owners who wish to perform their own maintenance and light repair, a new Do-It-Yourself Repair Manual is available for Camry and Tacoma models.

Vehicle Repair Manual

These are the same service and repair manuals used by professional technicians in Toyota dealerships throughout the U.S. They are fully illustrated and cover each of your vehicle's systems in considerable detail.

- Tune-up instructions and specifications.
- Repair procedures for all vehicle mechanical systems, e.g., brakes, engine, transmission, and chassis.

Repair Manual Supplements

- Electrical Systems book provides detailed electrical wiring diagrams for each electrical system in your vehicle.
- Automatic Transmission/Transaxle Overhaul book covers procedures for overhaul of the automatic transmission/transaxle of your vehicle.

Do-It-Yourself Repair Manual

- Maintenance instructions.
- Light repair procedures for commonly performed owner repairs.

Ordering Procedures

If you wish to order one or more of the manuals, simply fill out both sides of the order form, cut it out, and mail it to us, or you can phone direct. If you are in any way dissatisfied with your order, return it within 10 days for a full refund.

If you wish to place a CREDIT CARD ORDER by telephone, please have your credit card handy when calling.

Only credit card orders can be accepted by phone.

Toyota Service Publications
1-800-622-2033

Service Manuals Order Form

Mail to:

TOYOTA SERVICE PUBLICATIONS
750 W. Victoria St.
Compton, CA 90220-5538

Name
Address
City State ZIP

Complete both sides of form.

Your Name (Print clearly) (Please, no currency)

☐ Money Order ☐ VISA
☐ MasterCard ☐ Check (Payable to: Toyota Service Publications)

Daytime Phone # (__ __ __) __ __ __ - __ __ __ __

Credit Card No.	
Expiration Date	
Signature (Required if using credit card)	

Credit card orders can be made toll-free from 7:00 a.m. to 4:30 p.m. PST by calling 1-800-622-2033.

SERVICE MANUALS

52

Model Year

Vehicle I.D. Number (see inside driver's door post)

† Call our "800" number for prices: 1-800-622-2033

*** SALES TAX IS REQUIRED *EXCEPT* IN THE STATES LISTED BELOW:**

DELAWARE
HAWAII
MONTANA
NEW HAMPSHIRE
OREGON

NOTE: Manuals shipped to Alaska, Puerto Rico, Virgin Islands, and Hawaii shipped air only.

	Price†	Quantity	Total
Repair Manuals Camry, Celica, Corolla, Land Cruiser, RAV4, Paseo, Previa, 4Runner, Supra, T100, Tacoma, Tercel, Avalon	†		
Electrical Systems Manual (Available in all models listed above)	†		
Automatic Transmission Manuals and Transaxle Service Manuals (Available in all models listed above)	†		
Owner's Manual (Available in all models listed above)	†		
Do-It-Yourself Repair Manual (Camry and Tacoma models only)	†		

Shipping and Handling**		
(Choose one)	Delivery time	Cost
Surface	2-3 weeks	6.00
Air 1***	2 days	20.00
Air 2***	3-4 days	12.00

Subtotal	
Sales Tax*	
☐ Surface ☐ Air 1 ☐ Air 2	$
Total Order	

** Shipping and handling costs reflect single manual orders only. For multiple manuals, please call for charges. Shipping and handling for a single *Owner's Manual* is $2.00 for surface delivery.

*** Air 1 and Air 2: No deliveries to P.O. Boxes or APO.

Foreign shipments shipped U.P.S. Air only. Applicable duty charges paid by customer.

VEHICLE IDENTIFICATION

Model Model Year

Body Style

Vehicle I.D. Number

In-Service Date

Mileage at Delivery

Key Number

Selling Dealer's Name

Dealer Code

SPEEDOMETER REPLACEMENT RECORD

Speedometer Replaced on (Date)

with Miles on the Odometer

Toyota Dealer Signature

OWNER IDENTIFICATION

Name

Address

City State ZIP

Telephone

NOTES:

NOTES:

NOTES:

NOTES:

TOYOTA



WE REALLY CARE ABOUT YOU – PLEASE BUCKLE UP.

Toyota has made a special effort to encourage use of seat belts.
Toyota belts are:

- Comfortable
- Easy to use
- Convenient

We encourage you to use your belts every time you drive.

00404-01997-CAR
Printed in U.S.A.
07/96

96-SPO-221

00404-01997-TRK
Printed in U.S.A.
07/96

00404-01997-CAR
Printed in U.S.A.
07/96

Table of Contents

In this manual you will find:

Warranty at a Glance	1
The Toyota Touch	2
How to Get Assistance	3
New Vehicle Limited Warranty	
• What Is Covered	4
• What Is Not Covered	6
• Owner's Responsibilities	7
Federal Emission Warranty	9
California Emission Control Warranty	13
Tire Limited Warranty	17
Arbitration	18
Seat Belt/Audio Systems	21
Extended Protection for Your Vehicle	22
Parts and Service	23
Toyota Parts Centers	24
Toyota Express Lube	25
Lifetime Guarantee Program	26
Genuine Toyota Fluids	27
Dealer Certificate	28
Scheduled Maintenance	29
Maintenance Log	34
Service Manuals	50
Vehicle Identification/ Owner Identification	53

1997 OWNER'S MANUAL SUPPLEMENT

PART 1

TOYOTA

Passenger Car

This Is a Supplement to Your Owner's Manual

- Keep this manual in your vehicle. In it you will find warranties and information about Toyota parts and service, as well as how to maintain your new Toyota.

- Warranty information is provided to protect your investment and outlines procedures for solving any problem you may have with your new Toyota. Your *Owner's Manual* also contains important information. Be sure to read it carefully.

- Maintenance information for your Toyota is provided in the **Scheduled Maintenance** section of this supplement. This section clearly indicates the minimum maintenance requirements for your Toyota based on your driving habits and operating conditions.

- The **Scheduled Maintenance** section of this supplement also includes a Maintenance Log which clearly identifies the specific maintenance requirements for each mileage interval while providing you with a convenient place to document your Toyota's maintenance history.

- All information is based on the latest data available at time of publication and is subject to change without notice, except the emissions warranty.

- Please be aware that any modification to your Toyota could affect its performance, safety, or durability, and may even violate government regulations.

- Please be aware that the failure to follow procedures specified in the Owner's Manual and this supplement could result in voiding the warranty in whole or in part.

- To further demonstrate our commitment to your satisfaction with your Toyota vehicle, there may be times when Toyota will establish a special policy adjustment for your particular vehicle model which will pay for all or part of the costs of certain repairs beyond normal warranty coverage.

For more details please call your dealership or call Toyota toll-free at 1-800-331-4331.

WARRANTY COVERAGE

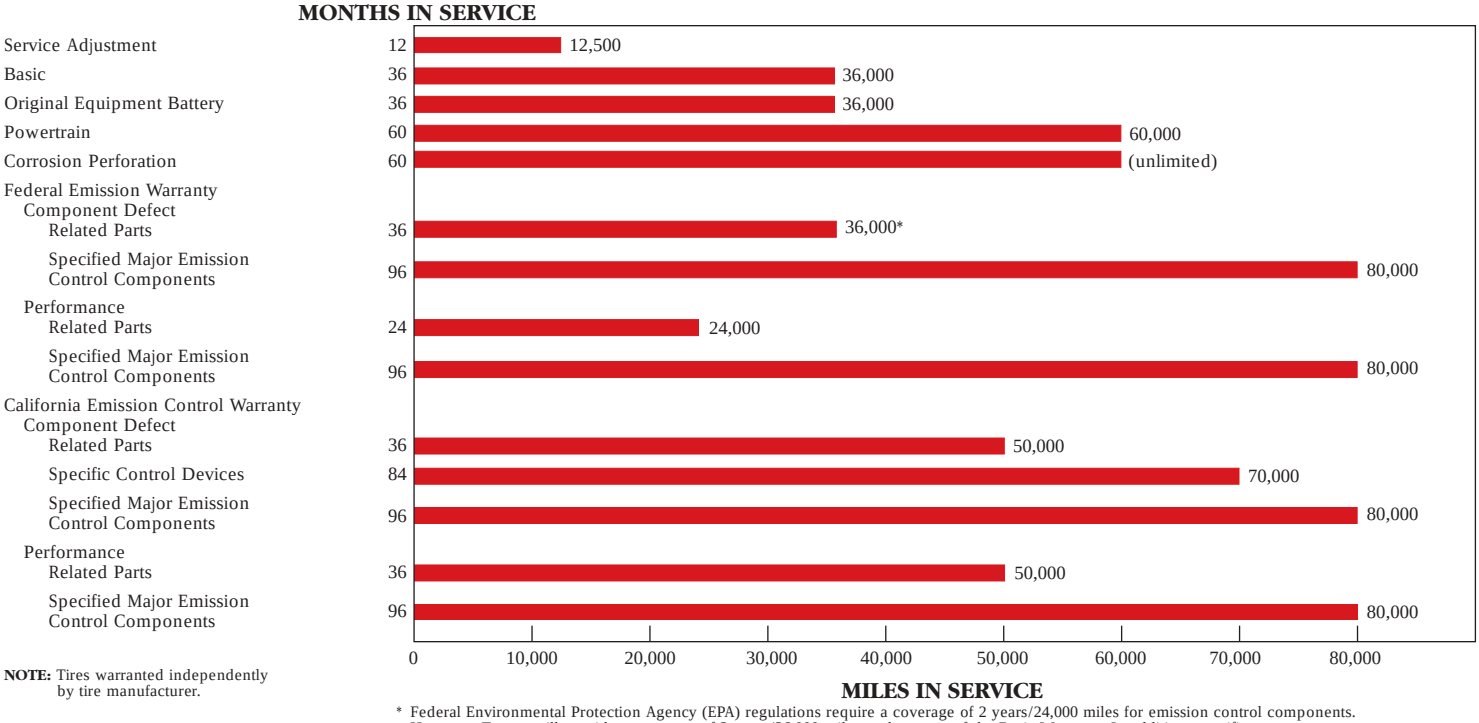

NOTE: Tires warranted independently by tire manufacturer.

* Federal Environmental Protection Agency (EPA) regulations require a coverage of 2 years/24,000 miles for emission control components. However, Toyota will provide a coverage of 3 years/36,000 miles under terms of the Basic Warranty. In addition, specific components may be entitled to additional coverage under terms of the Powertrain Warranty.

What Is the Toyota Touch?

It is our commitment to you. When you purchase a Toyota car, truck, sport utility vehicle, or van, we want you to derive even more satisfaction and receive even more value than you expect.

The Toyota Touch begins with design and engineering that leads the automobile industry in quality, innovation, economy, reliability, styling, and performance. Our 36 month/36,000 mile limited basic warranty coverage, with longer limited warranty coverage for specific components, further demonstrates this commitment to you—the customer. Throughout this lengthy warranty period, we are there to stand behind our product quality and YOU.

In addition to our lengthy limited warranty, the Toyota Touch is our commitment to treat you the way you want to be treated. It means that every step of the way, from your first visit or phone call to a Toyota dealer, through purchase and delivery, to after-sales service, we're committed to the spirit as well as the letter of courteous, fair, and reasonable treatment.

The Toyota Touch is our way of doing business with you. It's as simple as a smile, a handshake, and a promise kept.

HAVE A QUESTION OR PROBLEM?

Just ask for our

Customer Relations Manager.

YOUR SATISFACTION IS #1 WITH US.

THE TOYOTA TOUCH

To Our Customers

Toyota has a commitment to you and your satisfaction. From your first phone call or visit to the dealership, through the purchase and delivery of your new Toyota, to after-sales service, your satisfaction is Number One with us.

If you should experience a problem or concern, either within or outside of the warranty period, please follow these procedures in the sequence listed for the fastest possible response.

Step 1: Contact the Dealership Customer Relations Manager

If you have a question, concern, or complaint, just ask for the dealership Customer Relations Manager. This person has been specially trained to understand the customer's point of view when a question or problem arises.

The Customer Relations Manager has the responsibility to resolve most cases and will make every effort to conduct a fair review of your situation.

Note: For information regarding specific state regulations and notices, see the Toyota *Owner's Manual Supplement Part 2* in your vehicle glove box.

Step 2: Call the Toyota Customer Assistance Center

If for any reason you still need assistance after contacting the dealership Customer Relations Manager, please call Toyota's Customer Assistance Center toll-free at:

1-800-331-4331

For our hearing and/or speech impaired customers, please call toll-free at:

1-800-443-4999 (TDD)

A Toyota Customer Assistance Representative will review your request and help with any further questions or problems you may have regarding your vehicle warranty or any special policy adjustments.

Note: In order to give you the greatest assistance possible, please help us by providing the following information when you call:

- Vehicle Identification Number. (You will find this 17-digit number located on the driver's side corner of the dash under the window. It is also listed on your sales contract/invoice.)
- Current mileage on your Toyota (if applicable).
- Names of the selling and servicing dealerships.
- Your daytime and evening phone numbers.

Step 3: Arbitration

If you should experience a problem which has not been resolved to your satisfaction through Steps 1 and 2, Toyota offers additional assistance through the Council of Better Business Bureaus' (CBBBs') BBB AUTO LINE arbitration program. CBBB serves as the administrator of the BBB AUTO LINE program. All arbitrators and technical experts are employed through BBB AUTO LINE.

BBB AUTO LINE will resolve your complaint through arbitration — a process by which two or more parties authorize an independent third party to resolve the dispute.

This procedure is quick, easy to use, and offered to you at no cost.

Please refer to the New Vehicle Limited Warranty for additional information regarding the arbitration process.

Note: In Canada, assistance may be obtained from:
Toyota Customer Service Office
Toyota Canada Inc.
One Toyota Place
Scarborough, Ontario M1H1H9
Canada
1-800-263-7640 (Canada only)

What Is Covered

Warrantor

TOYOTA warrants each new 1997 vehicle. For the purpose of warranty in the mainland United States and Alaska, TOYOTA is Toyota Motor Sales, U.S.A., Inc. (a California corporation).

Warranty Application

This warranty is applicable to any vehicle registered and normally operated in the mainland United States, Alaska, and Canada only.

No Charge

Warranty repairs and adjustments (parts and/or labor) will be made at no charge.

Fully Transferable

Warranty coverage is fully transferable at no cost to subsequent vehicle owners.

Warranty Begins

The warranty period begins on the date the vehicle is first delivered or put into use (in-service date).

Any implied warranty of merchantability or fitness for a particular purpose applicable to this vehicle is limited to the duration of the written warranty. Some states do not allow limitations on how long an implied warranty lasts, so the above limitation may not apply to you.

Arbitration

In the unlikely event a dispute arises as to your warranty coverage, Toyota offers dispute resolution through arbitration provided by:

BBB AUTO LINE
4200 Wilson Blvd., Suite 800
Arlington, VA 22203

Arbitration is available to you free of charge. BBB AUTO LINE is designed to render a decision within 40 days from BBB AUTO LINE's receipt of your request for arbitration. BBB AUTO LINE's decision is binding on Toyota but not on you.

IMPORTANT: You *must* use BBB AUTO LINE prior to seeking remedies available to you through a court action pursuant to the Magnuson-Moss Warranty Act (the "Act"). In addition, you *must* use BBB AUTO LINE if you are required to do so prior to seeking remedies available under the "Lemon Law" of your state. See the appropriate page in the *Owner's Manual Supplement Part 2* in your vehicle glove box for specific requirements applicable in your state. However, if your state law permits and if you choose to seek remedies which are not created by the Act, you are not required to use BBB AUTO LINE, although that option is still available to you.

Please refer to pages 18–20 in this manual for additional information regarding the arbitration process.

Basic Coverage Period

This warranty covers repairs to any part that Toyota supplies that is defective in materials or workmanship under normal use, except those items listed under "What Is Not Covered," for a period of 36 months or 36,000 miles, whichever occurs first. Selected components are warranted for longer periods.

Exceptions

The items specified below are covered for periods different from the basic coverage.

- **Air Conditioner**
  Air conditioner refrigerant charge is covered for the first 12 months, regardless of mileage, unless done as part of a warranty repair.
- **Adjustments**
  Service adjustments — minor repairs not usually associated with the replacement of parts — are covered for the first 12 months or 12,500 miles, whichever occurs first. (**Note:** Adjustments required to pass an emissions test are subject to the applicable emission warranty coverage.)

Powertrain

Engine, transmission, front wheel drive, rear wheel drive, and restraint system components are warranted against defects in materials or workmanship under normal use, except those items listed under "What Is Not Covered," for a period of 60 months or 60,000 miles, whichever occurs first, from the vehicle's in-service date. Specific components covered by this warranty are as follows:

- **Engine:** Cylinder block, head, and all internal parts, intake manifold, timing gears and gaskets, timing gear chain/belt and cover, flywheel, valve covers, oil pan, oil pump, engine mounts, water pump, fuel pump, turbocharger housing and all internal parts, supercharger housing, and all internal parts, engine control computer, seals, and gaskets.
- **Transmission and Transaxle:** Case and all internal parts, torque converter, clutch cover, transmission mounts, transfer case, and all internal parts, engine control computer, seals, and gaskets.
- **Front Wheel Drive:** Final drive housing and all internal parts, axle shafts, drive shafts, constant velocity joints, front hub, and bearings, seals, and gaskets.
- **Rear Wheel Drive:** Axle housing and all internal parts, propeller shafts, U joints, axle shafts, drive shafts, bearings, supports, seals, and gaskets.
- **Restraint System:** Front seat belts, rear seat belts, and air bags.

For vehicles sold and registered in the state of Kansas, the warranty for seat belts and related components is 10 years, regardless of mileage.

Corrosion Perforation

Any body sheet metal found under normal use to have developed a perforation (hole through the body panel) from corrosion due to defects in materials or workmanship is warranted for 60 months, regardless of mileage. (Refer to page 8 for important information about protecting your vehicle.)

Towing

When your vehicle is inoperative due to a warranted part failure, towing service is covered to the nearest authorized dealership.

What Is Not Covered

Factors Beyond the Manufacturer's Control

- Repairs and adjustments required as a result of misuse (for example, racing, overloading), negligence, modification, alteration, tampering, disconnection, improper adjustments unless performed by a dealership during warranty repair work or repairs, accident, and use of add-on parts/materials are not covered.
- Cosmetic conditions or surface corrosion from stone chips or scratches in the paint are not covered.
- Damage or surface corrosion from the environment such as acid rain, airborne fallout (chemicals, tree sap, etc.), salt, hail, windstorms, lightning, floods, other acts of God, and the like is not covered.

Lack of Maintenance or Use of Wrong Fuel, Oil, Lubricants, or Fluids

- Repairs and adjustments caused by improper maintenance, lack of required maintenance, or the use of fluids other than fluids specified in the *Owner's Manual* are not covered.

Maintenance Is at Owner's Expense

- Engine tune-up, lubrication, cleaning and polishing, replacement of filters, coolant, fuses, worn wiper blades, and worn brake pads and linings or clutch linings are some of the normal maintenance services all vehicles require and are not covered. Required scheduled maintenance is explained in this supplement.

Normal Noise, Vibration, and Deterioration

- Normal noise, vibration, wear and tear, and deterioration such as discoloration, fading, deformation, or blur are not covered.

Altered Mileage

- Failure of a vehicle on which the odometer mileage has been altered or changed so that vehicle mileage cannot be readily ascertained is not covered.

Tires

- Tires are warranted under a separate warranty provided by the tire manufacturer. Refer to page 17 for tire manufacturer information and warranty details.

Scrapped or Salvaged Vehicles

- A vehicle which has been damaged to such an extent that the owner or the institution financing, leasing, or insuring the vehicle considers it uneconomical to repair it and, as a result, the vehicle is not repaired by or for the person who owns the vehicle at the time of the event resulting in the damage is not covered by the Toyota New Vehicle Limited Warranty, with the exception of any applicable Emission Warranty. This includes, but is not limited to, those vehicles which are currently or were previously titled as "scrap," "salvage," or "dismantled."

Extra Expenses and Damages

Toyota does not authorize any person to create for it any other obligation or liability in connection with this vehicle. ANY IMPLIED WARRANTY OF MERCHANTABILITY OR FITNESS FOR A PARTICULAR PURPOSE APPLICABLE TO THIS VEHICLE IS LIMITED TO THE DURATION OF THIS WRITTEN WARRANTY. The performance of repairs and needed adjustments is the exclusive remedy under this warranty or any implied warranty.

TOYOTA SHALL NOT BE LIABLE FOR INCIDENTAL OR CONSEQUENTIAL DAMAGES (FOR OTHER THAN INJURY TO THE PERSON) RESULTING FROM BREACH OF THIS WRITTEN WARRANTY OR ANY IMPLIED WARRANTY.

Some states do not allow limitations on how long an implied warranty lasts or the exclusion or limitation of incidental or consequential damages, so the above limitations may not apply to you.

This warranty gives you specific legal rights, and you may also have other rights which vary from state to state.

Owner's Responsibilities

Obtaining Warranty Service

You are responsible for delivering your vehicle to any authorized Toyota dealer in the mainland U.S. (excluding Hawaii), Alaska, and Canada in order to obtain warranty service.

Maintenance

You are responsible for properly operating, maintaining, and caring for your Toyota in accordance with the instructions contained in your *Owner's Manual* and this supplement.

If your vehicle is subject to use under severe driving conditions, you should follow the maintenance requirements specified accordingly in the Scheduled Maintenance section of this supplement.

Note: Your dealer may recommend more frequent intervals or may include items which are in addition to those listed in the Scheduled Maintenance section of this booklet. These additional services are not required to maintain your warranty coverage. Please see your dealer for an explanation of any maintenance recommendations which are not part of your vehicle's maintenance schedule.

Maintenance Records

You are responsible for keeping maintenance records since it may be necessary in some instances for you to show that the required maintenance has been performed.

The Maintenance Log in the Scheduled Maintenance section of this supplement provides a convenient way to track and record your vehicle's maintenance history.

Where to Go for Warranty Service

Your Toyota dealer will make the necessary repairs or adjustments using new or remanufactured parts. Repair or replacement of a part is at the discretion of the Toyota dealer. While any Toyota dealer in the mainland U.S., Alaska, and Canada will perform warranty service, Toyota recommends that you return to the dealership which sold you your vehicle because of their continued and personal interest in you.

Customer Assistance

Should you have any questions regarding your warranty coverages or wish to inquire about a special policy adjustment covering your vehicle, please contact the dealership or call Toyota toll-free at 1-800-331-4331.

Touring/Relocating Outside the Mainland United States, Alaska, and Canada

If you are touring or relocating outside the mainland U.S., Alaska, and Canada, and a problem arises, please consult a local Toyota dealer. Please note, however, that warranty service may not be provided by the local dealer because the local Toyota distributor may have no obligation to provide warranty service to your vehicle, and/or your Toyota may not comply with the regulatory and/or environmental requirements of such country.

What Can You Do to Help Protect Your Toyota Against Corrosion?

In order to help protect your vehicle against corrosion, it is important that you care for your vehicle regularly, following these suggestions:

- Wash regularly using cold, clean water and a mild vehicle wash soap.
- If insects, tar, or other similar deposits have accumulated on your vehicle, wash it as soon as possible.
- Wash your vehicle in the shade.
- Under certain conditions, special care should be taken to protect your Toyota against corrosion. If you drive on salted or dust-controlled roads, or if you drive near the ocean, hose off the undercarriage at least once a month.
- It is important that the drain holes in the lower edges of the doors and rocker panels be kept clear.
- If you detect any stone chips or scratches in the paint, touch them up immediately.
- If you do much driving on gravel roads, consider installing mud or stone shields behind each wheel.
- If you carry special cargo, such as chemicals, fertilizers, de-icer salt, etc., be sure that such materials are well-packaged and sealed.
- If your Toyota is damaged due to an accident or similar cause which destroys the paint and protective coating, have your vehicle repaired as soon as possible. The cost of such repairs is considered the responsibility of the owner.

This corrosion warranty does not cover non-genuine Toyota sheet metal parts or damage caused by the installation of such non-genuine Toyota sheet metal parts.

Application of additional rust-inhibiting materials is not necessary to protect your new Toyota, nor is it required in order to keep the five-year warranty coverage in effect.

Emission Defect Warranty

TOYOTA warrants to the retail purchaser and each subsequent purchaser that the Toyota vehicle:

- Was designed, built, and equipped so as to conform at the time of sale with regulations of the U.S. Environmental Protection Agency (EPA) as may be applicable.
- Is free from defects in materials and workmanship which may cause the vehicle to fail to conform with the above-mentioned applicable regulations.

EPA regulations require that the warranty is in effect for two years from the date the vehicle is first put into service or 24,000 miles, whichever occurs first. However, Toyota will provide you a coverage of three years or 36,000 miles, whichever occurs first, under the terms of the Basic Warranty. In addition, specific components may be entitled to additional coverage under terms of the Powertrain Warranty.

EPA regulations also require that the warranty for specified major emission control components designated by (*) is in effect for eight years or 80,000 miles, whichever occurs first.

The emission control parts covered by this warranty are listed on page 10.

Emission Performance Warranty

Some states and local jurisdictions have established periodic vehicle inspection and maintenance (I/M) programs to encourage proper maintenance of your vehicle. If an EPA-approved I/M program is in force in your area, you are eligible for emission performance warranty coverage.

EPA regulations require that Toyota make all necessary adjustments, repairs, or replacements at no cost to you if:

- Your vehicle fails to conform to applicable emission standards as determined in an EPA-approved emission test, and
- Such failure results or will result in your having to bear any penalty or other sanctions under local, state, or federal law.

EPA regulations require that the warranty is in effect for two years from the date the vehicle is first put into service or 24,000 miles, whichever occurs first.

In addition, EPA regulations require that the warranty for specified major emission control components designated by (*) is in effect for eight years or 80,000 miles, whichever occurs first.

The emission control parts covered by this warranty are listed on page 10 of this supplement.

Note: Vehicles equipped with a California Certified Emission Control System and registered and normally operated in the state of California or Massachusetts are also entitled to the California Emission Warranty. (See page 13 of this supplement.)

Warranty Parts List

AIR/FUEL METERING SYSTEM
- EFI Components
  - Airflow Sensor
  - Throttle Body
  - Engine Control Module*
  - Other Components
- Cold Start Enrichment System
- Deceleration Control
- Air/Fuel Ratio Feedback Control System

AIR INDUCTION SYSTEM
- Intake Manifold and Intake Air Surge Tank
- Turbocharger/Supercharger
- Charge Air Cooler

IGNITION SYSTEM
- Distributor and Internal Parts
- Spark Plugs**
- Ignition Coil and Ignitor
- Ignition Wires

POSITIVE CRANKCASE VENTILATION SYSTEM (PCV)
- PCV Valve or PCV Orifice
- Oil Filler Cap

EVAPORATIVE CONTROL SYSTEM
- Charcoal Canister
- Vapor Liquid Separator
- Fuel Tank
- Fuel Filler Cap

EGR SYSTEM
- EGR Valve
- Associated Parts

AIR INJECTION SYSTEM
- Air Injection Pump
- Airflow Control Valves
- Air Injection Manifold

CATALYST SYSTEM
- Catalytic Converter and Protector*
- Constricted Fuel Filler Neck
- Exhaust Manifold
- Exhaust Pipe (Manifold to Catalyst and/or Catalyst to Catalyst)

MISCELLANEOUS ITEMS USED IN ABOVE SYSTEMS
- Data Link Connector*
- Sensors, Switches, and Valves
- Hoses, Clamps, Fittings, Tubing, Sealing Gaskets or Devices, and Mounting Hardware
- Pulleys, Belts, and Idlers
- Bulbs for malfunctioning indicator (Engine system warning light)*

**Spark plugs warranted until first required maintenance only.

What Is Not Covered

Noncompliance caused by defective replacement parts not certified in accordance with the aftermarket parts certification regulations is not covered.

Noncompliance caused by the use of replacement parts not equivalent to original equipment parts is not covered.

Other provisions specified under the "What Is Not Covered" section in the New Vehicle Limited Warranty are also applicable to this warranty.

Facts About the Emission Warranty

Replacement Parts

The emission control systems of your vehicle were designed, built, and tested using Genuine Toyota Parts. Your vehicle is certified as conforming to applicable federal emission control regulations. Therefore, it is recommended that Genuine Toyota Parts be used as replacement parts.

Use of parts certified in accordance with aftermarket parts certification regulations for repairs and/or maintenance that are paid for by you will not affect the emission warranty coverage. However, use of replacement parts that are not of equivalent quality may impair the effectiveness of the emission control systems. Noncompliance caused by defective replacement parts not certified in accordance with aftermarket parts certification regulations or caused by the use of replacement parts not equivalent to original equipment parts is not covered.

Repairs and Maintenance

The use of any automotive repair establishment or individuals who regularly engage in the business of servicing automobiles for the performance of the maintenance, replacement, or repair of emission control devices and systems that are paid for by you does not affect the emission warranty.

Owner's Responsibility

It is your responsibility to ensure that the vehicle is maintained and operated in accordance with the written instructions for proper maintenance and use as specified in your *Owner's Manual* and this supplement.

In an emergency situation, or to rectify an unsafe condition where an authorized Toyota dealer is not reasonably available, you may perform the repair, or have the repair performed at any service establishment or by a person of your choosing. You will then be required to present the replaced parts and paid repair invoices to an authorized Toyota dealer for reimbursement of the reasonable emergency repair cost.

Maintenance records and receipts should be transferred to each subsequent owner. Toyota will not refuse warranty service based solely on the lack of maintenance or the lack of records showing the maintenance was performed, except when failures are caused by the lack of maintenance.

If you use certified replacement parts that have maintenance or replacement intervals different from those specified in this supplement, you must follow the maintenance and replacement schedule for the certified parts.

FEDERAL EMISSION WARRANTY

12

Filing a Claim With Toyota

A claim may be raised immediately upon the failure of an EPA-approved emission test by following these steps:

1. Take the failed vehicle to any authorized Toyota dealer and present a copy of the emission short test report as evidence of failure. Also, take your maintenance records in case they are needed.
2. The Toyota dealership will inspect your vehicle and determine the warranty applicability within a reasonable period of time (not to exceed 30 days) from your initial vehicle delivery date to any authorized Toyota dealership or within the time period required by local or state law.
3. If for any reason the claim is denied, a written explanation will be presented to you.
4. If Toyota fails to notify you of its decision within the time specified at left for reasons other than those listed below, Toyota shall be responsible for repairing the vehicle free of charge.
   - Delay is requested by you.
   - Delay is caused by factors beyond the control of Toyota or Toyota dealerships.
5. If you wish to obtain further information regarding the emission performance warranty, or if you have failed to receive satisfactory assistance from TOYOTA by following the problem resolution steps outlined in the “How to Get Assistance” section of this supplement, you may contact:

   Director, Field Operations and Support Division (EN 397F)
   Environmental Protection Agency
   401 M Street SW
   Washington, D.C. 20460

Your Warranty Rights and Obligations

The California Air Resources Board (CARB) and Toyota are pleased to explain the emission control system warranty on your 1997 vehicle. In California, new motor vehicles must be designed, built, and equipped to meet the state's stringent anti-smog standards. CARB regulations require that Toyota must warrant the emission control system on your vehicle for the periods of time listed below, provided there has been no abuse, neglect, or improper maintenance of your vehicle.

Your emission control system may include parts such as the fuel-injection system, the ignition system, catalytic converter, and engine computer. Also included may be hoses, belts, connectors, and other emission-related assemblies.

Where a warrantable condition exists, Toyota will repair your vehicle at no cost to you, including diagnosis, parts, and labor.

Manufacturer's Warranty Coverage

1. For 3 years or 50,000 miles, whichever occurs first:
   - If your vehicle fails a smog check inspection, all necessary repairs and adjustments will be made by Toyota to ensure that your vehicle passes the inspection. This is your emission control system PERFORMANCE WARRANTY.
   - If any emission-related part on your vehicle is defective, that part will be repaired or replaced by Toyota. This is your short-term emission control system DEFECTS WARRANTY. In addition, you may be entitled to additional coverage under terms of the powertrain warranty.
2. For seven years or 70,000 miles, whichever occurs first:
   - If an emission-related part listed in this supplement specially noted with coverage for seven years or 70,000 miles is defective, the part will be repaired or replaced by Toyota. This is your long-term emission control system DEFECTS WARRANTY.

Owner's Warranty Responsibilities

As the vehicle owner, you are responsible for the performance of the required maintenance listed in your *Owner's Manual* and this supplement. Toyota recommends that you retain all receipts covering maintenance on your vehicle, but Toyota cannot deny warranty solely for the lack of receipts or for your failure to ensure the performance of all scheduled maintenance.

You are responsible for presenting your vehicle to a Toyota dealer as soon as a problem exists. The warranty repairs should be completed in a reasonable amount of time, not to exceed 30 days.

As the vehicle owner, you should also be aware that Toyota may deny you warranty coverage if your vehicle or a part has failed due to abuse, neglect, improper maintenance, or unapproved modifications.

If you have any questions regarding your warranty rights and responsibilities, you should contact Toyota's Customer Assistance Center toll-free at 1-800-331-4331 or the California Air Resources Board at 9528 Telstar Avenue, El Monte, CA 91731.

Other Warranty Terms

- The warranty period begins on the date the vehicle is first delivered to the ultimate purchaser or on the date it is first placed in service as a "demonstrator" or "company" car.
- Parts that are scheduled for replacement as required maintenance are warranted up to their first replacement point.
- If you use a replacement part that has maintenance or replacement intervals different from those specified in this supplement, you must follow the maintenance and replacement schedule for the replacement part.
- Maintenance records and receipts should be transferred to each subsequent owner.
- After the three years or 50,000 miles emission performance warranty period has passed, a defect in a part which is warranted for seven years or 70,000 miles long-term emission defect warranty found during a smog check test failure is covered. In addition to the California emission performance warranty, Toyota would like to inform you that your vehicle is also subject to Federal emission performance warranty guidelines applicable to specified major emission control components for a period of eight years or 80,000 miles. See page 8 of this supplement for an explanation of this warranty coverage.
- The defect warranty covers any part on the vehicle which affects any regulated emissions.

What Is Not Covered

These warranty obligations will not apply:

- Should tampering, abuse, neglect, or improper maintenance be found as the direct cause of the need for repair, replacement, or adjustment.
- Should noncompliance be caused by the use of replacement parts not equivalent to original Toyota parts.

Other provisions specified under the "What Is Not Covered" section in the New Vehicle Limited Warranty are also applicable to these warranties.

Long-Term Emission System Defect Warranty Parts List

The parts on this list are covered for a period of seven years or 70,000 miles, whichever occurs first.

AIR/FUEL METERING SYSTEM

- Engine Control Module
- Throttle Body
- Volume Air Flow Sensor
- Mass Air Flow Sensor
- Manifold Absolute Pressure Sensor
- Idle Air Control Valve on Supra and Land Cruiser Wagon 4WD
- Injector on Supra equipped with 2JZ-GTE

AIR INDUCTION SYSTEM

- Intake Manifold and Intake Air Surge Tank
- Intake Manifold Gasket on RAV4 2WD, RAV4 4WD, Land Cruiser Wagon 4WD
- Charge Air Cooler
- Supercharger
- Turbocharger
- Intake Air Control Valve

IGNITION SYSTEM

- Distributor and Internal Parts
- Knock Sensor on Camry and Avalon equipped with 1MZ-FE; Previa, Previa All-Trac; T100 2WD, T100 4WD; Tacoma 2WD, Tacoma 4WD; 4Runner 2WD, 4Runner 4WD equipped with 5 Z-FE
- Ignitor on Avalon

CATALYST SYSTEM

- Exhaust Manifold on Supra equipped with 2JZ-GTE, Camry and Avalon equipped with 1MZ-FE
- Right Exhaust Manifold Gasket on Camry and Avalon equipped with 1MZ-FE
- Catalytic Converter (Warm-Up Three-Way Catalyst)

- Exhaust Front Pipe on Tercel, Paseo, Camry, Avalon, Supra, Previa, Previa All-Trac, Land Cruiser Wagon 4WD, 4Runner 2WD, 4Runner 4WD
- Exhaust Center Pipe on Previa, Previa All-Trac, T100 2WD, T100 4WD
- Turbine Outlet Elbow

EVAPORATIVE CONTROL SYSTEM

- Fuel Tank

EGR SYSTEM

- EGR Pipe on Land Cruiser Wagon 4WD

Facts About the Emission Warranty

Replacement Parts

The emission control systems of your vehicle were designed, built, and tested using Genuine Toyota Parts, and the vehicle is certified as being in conformity with applicable federal and California emission control regulations. Therefore, it is recommended that replacement parts used be Genuine Toyota Parts.

Use of parts that are equivalent to Genuine Toyota Parts for repairs and/or maintenance that are paid for by you will not affect the emission warranty coverage. However, use of replacement parts that are not of equivalent quality may impair the effectiveness of the emission control systems. If other than Genuine Toyota Parts are used for maintenance, replacement or repair of components affecting emission control, you should ensure that such parts are warranted by their manufacturers to be equivalent to Genuine Toyota Parts in calibration, performance, and durability.

Repairs and Maintenance

The performance of required scheduled maintenance by you or by a person of your choosing or the use of any automotive repair establishment or individuals who regularly engage in the business of servicing automobiles for the performance of the maintenance, replacement, or repair of emission control devices and systems that are paid for by you does not affect the emission warranty.

Emergency Repairs

In an emergency situation or to rectify an unsafe condition where an authorized Toyota dealer is not reasonably available, or a part is not available within 30 days, or a repair is not completed within 30 days, you may perform the repair, or you may have the repair performed at any service establishment or by a person of your choosing. Any replacement part may be used in an emergency situation; however, Toyota will not assume liability for subsequent failure caused by the use of non-equivalent parts unless you have taken steps to put the vehicle back in a conforming condition in a timely manner. You will then be required to present the replaced parts and copies of paid repair invoices to an authorized Toyota dealer for reimbursement of expenses, including diagnostic charges, not to exceed the manufacturer's suggested retail price for all warranted parts replaced and labor charges based on the manufacturer's recommended time allowance for the warranty repair and the geographically appropriate hourly labor rate.

CALIFORNIA EMISSION CONTROL WARRANTY

Filing a Claim With Toyota

To file a claim for a defect, bring your vehicle to any authorized Toyota dealer.

If your vehicle fails a California smog check test, a claim may be raised by following these steps:

1. Take the failed vehicle to any authorized Toyota dealer and present a copy of the emission test report as evidence of failure. Also, take your maintenance records in case they are needed.
2. If the repair is covered under warranty, the Toyota dealership will perform the repair within a reasonable period of time (not to exceed 30 days) from your initial vehicle delivery date to any authorized Toyota dealership or within the time period required by local or state law.
3. If for any reason the claim is denied, a written explanation will be presented to you.
4. If Toyota fails to notify you of its decision within the time specified above for reasons other than those listed below, Toyota shall be responsible for repairing the vehicle free of charge.
   - Delay is requested by you.
   - Delay is caused by factors beyond the control of Toyota or Toyota dealerships.
5. If you have failed to receive satisfactory assistance from TOYOTA by following the problem resolution steps outlined in the "How to Get Assistance" section of this supplement, you may contact:

California Air Resources Board
Mobile Source Division
9528 Telstar Avenue
El Monte, CA 91731
1-800-242-4450

Director, Field Operations and Support Division (EN397F)
Environmental Protection Agency
401 M Street SW
Washington, D.C. 20460

What Is Covered

Each tire supplied as original equipment on a new 1997 Toyota vehicle is warranted separately by the tire manufacturer. Please refer to the separate tire manufacturer's warranty statement in your vehicle glove box for exact coverage.

Obtaining Warranty Service

You are responsible for delivering the vehicle with the unserviceable tire to any authorized dealer of the tire manufacturer in order to obtain warranty service. For the location of authorized tire dealers, please refer to your local telephone directory. Your Toyota dealer may also assist you in obtaining warranty coverage from the tire manufacturer.

The Tire Warrantors

Detailed tire warranty information and regional customer service phone numbers (where applicable) can be obtained by contacting the tire warrantors listed on this page.

The Respective Tire Warrantors Are:

Bridgestone/Firestone, Inc.
One Bridgestone Park
Nashville, TN 37214
1-800-847-3272

Toyo Tire (USA) Corporation
6415 Katella Ave.
Cypress, CA 90630
1-800-442-TOYO
1-800-238-TOYO

Goodyear Tire and Rubber Company
1144 East Market Street
Akron, OH 44316
1-800-321-2136

Yokohama Tire Corporation
601 S. Acacia Ave.
P.O. Box 4550
Fullerton, CA 92631-4550
1-800-722-9888

Dunlop Tire Corporation
P.O. Box 1109
Buffalo, NY 14240
1-800-548-4714

Michelin North America
One Parkway South
P.O. Box 19001
Greenville, SC 29602-9001
1-800-847-3435

Ohtsu Tire and Rubber Co., Ltd.
2539 237th St., Unit-A
Torrance, CA 90505
1-800-468-5448

General Tire
One General Street
Akron, OH 44329-0007
1-800-847-3349

ARBITRATION

BBB AUTO LINE Arbitration

If you should experience a problem which has not been resolved to your satisfaction through the first two steps of Toyota's complaint handling process, Toyota offers additional assistance through the COUNCIL OF BETTER BUSINESS BUREAUS' (CBBBs') BBB AUTO LINE arbitration program.

What Is BBB AUTO LINE?

BBB AUTO LINE is comprised of local BBB professionals who are trained and experienced in arbitration. BBB will arbitrate your case by reviewing the facts, inspecting the vehicle, if necessary, and promptly rendering a fair and equitable decision.

What Types of Disputes Are Eligible?

BBB AUTO LINE arbitrates disputes involving Toyota's product reliability or warranty performance which arise during the greater of 1) three years or 36,000 miles from the vehicle's in-service date, whichever is earlier, or 2) the applicable provision of Toyota's New Vehicle Limited Warranty. However, BBB AUTO LINE will not arbitrate claims involving a vehicle used primarily for commercial purposes unless the "Lemon Law" of your state covers vehicles used for commercial purposes or claims that an air bag failed to deploy or deployed when it should not have. You must file a request for arbitration with BBB AUTO LINE within 60 days of the expiration of the eligibility period, provided the concern or alleged defect was brought to the attention of Toyota or one of its dealers during the eligibility period.

How Long Is the Arbitration Process?

The entire process, from the time BBB AUTO LINE receives your request for arbitration to the arbitrator's decision, is designed to take no more than 40 days. In some cases a decision may be delayed because of:

- Your failure to provide certain information required by BBB AUTO LINE or your failure to make the vehicle available for inspection by BBB AUTO LINE in a timely manner when an inspection is necessary.
- Your failure to contact Toyota about your dispute before requesting arbitration.

The letter from BBB AUTO LINE advising you of its decision will specify that Toyota must comply with the decision shortly, usually within 30 calendar days. CBBB will contact you to ensure that Toyota has complied in a timely manner.

How Much Will it Cost?

There is no charge to you for submitting your dispute to BBB AUTO LINE. You may obtain copies of your case for a nominal fee from CBBB.

When to Use BBB AUTO LINE

Because most situations can be resolved by our customer satisfaction network, we recommend that you request arbitration only after utilizing Toyota's Steps 1 and 2 of the customer assistance process described earlier on page 3.

You must use BBB AUTO LINE prior to seeking remedies available to you through a court action pursuant to the Magnuson-Moss Warranty Act (the "Act"). In addition, you must use BBB AUTO LINE if you are required to do so prior to seeking remedies available under the "Lemon Law" of your state. See the appropriate page in the *Owner's Manual Supplement Part 2* in your vehicle glove box for specific requirements applicable in your state. However, if your state law permits and if you choose to seek remedies which are not created by the Act, you are not required to use BBB AUTO LINE, although that option is still available to you.

How to Request Arbitration

Complete the BBB AUTO LINE Customer Claim form, available through Toyota's Customer Assistance Center (by calling toll-free at 1-800-331-4331) or found at the center of your Toyota *Owner's Manual Supplement Part 2*. You will need the following information:

- Vehicle year, make, model, vehicle identification number (VIN), mileage, date of purchase.
- A brief description of your complaint and actions you have taken to resolve it.
- Enclose copies of invoices with your request for arbitration if you are seeking reimbursement for repairs or related incidental expenses.
- What action or remedy would resolve your problem.

Send your request to:

BBB AUTO LINE
4200 Wilson Blvd., Suite 800
Arlington, VA 22203

How Does the Arbitration Process Work?

When BBB AUTO LINE receives your request, it will be forwarded to the Toyota regional office/private distributor for response.

After receiving and analyzing all pertinent documentation, if applicable, BBB AUTO LINE will schedule a technical evaluation. This may include an inspection of the vehicle with a Toyota representative present.

An oral hearing will be held prior to the decision being rendered if you request it.

At the oral hearing, all evidence is admissible. In an oral hearing, you and a Toyota representative will present both sides of the case to the BBB AUTO LINE arbitrator. Each of you will be allotted approximately 30 minutes to give testimony and provide documents. Then you and Toyota will be given approximately 10 minutes each for rebuttal.

A settlement satisfactory to all parties may be negotiated during the mediation/arbitration process prior to submission of the case to the arbitrator.

If a technical evaluation was made, the technical expert will forward the technical evaluation report to the BBB AUTO LINE program.

At the oral hearing, an arbitrator will listen to all testimony and review all of the information available and the applicable legal standards and render a decision within 10 days of hearing completion.

What Types of Decisions Are Rendered, and How Do I Know If Toyota Will Abide by BBB AUTO LINE's Decision?

BBB AUTO LINE's decisions are based on what it believes is fair and appropriate under the circumstances after applying the appropriate legal standards. Remedies include, but are not limited to, repairs; reimbursement for repair or incidental expenses, such as towing costs; or repurchase or replacement of your vehicle. BBB AUTO LINE's decision is binding on Toyota, but not on you, the customer. Toyota must comply with the decision shortly after it is rendered, usually within 30 days. CBBB will contact you within 10 working days of scheduled performance to ensure that Toyota has complied with the decision in a timely manner.

ARBITRATION

Are There Limits on the Scope of BBB AUTO LINE Decisions?

BBB AUTO LINE decisions will not include:

- Attorney Fees
- Punitive Damages
- Multiple Damages
- Consequential Damages other than incidental damages which you may be entitled to under law.

What Other Recourse Do I Have Available?

If you are dissatisfied with the arbitrator's decision or Toyota's performance, you may pursue any other legal remedies which you may have including small claims court. You should be aware that the arbitration findings are admissible as evidence in any subsequent legal proceedings concerning your dispute.

Is the BBB AUTO LINE Program Subject to Change?

The information about BBB AUTO LINE in this *Owner's Manual Supplement* was correct as of the date of printing. The program may, however, be changed without notice. Contact Toyota at 1-800-331-4331 or BBB AUTO LINE if you have any questions about BBB AUTO LINE.

The Experts Say, "Buckle Up!"

The importance of using seat belts cannot be overemphasized. The safety experts from government and private organizations say "Buckle Up!" Here are a few good reasons why:

- Properly adjusted seat belts can help reduce driving fatigue and help the driver maintain better vehicle control.
- Studies show that generally the safest place in a collision is inside your vehicle. Seat belts can help keep you there.
- Eight out of ten injury accidents occur at speeds under 40 mph, but even below 5 mph children can be injured during quick turns or sudden stops. Children who are too small to wear regular seat belts should always be provided with a Child Restraint System dynamically tested to meet federal standards.

In addition to seat belts, many Toyota vehicles are equipped with both driver's and passenger's side supplemental restraint systems (SRS air bags). Air bags have been designed to supplement the three-point seat belt by providing additional protection by restraining the forward motion in the event of a more serious frontal accident. **The SRS does not replace use of the seat belt.** To obtain maximum protection in an accident, the driver and all passengers in the vehicle should always wear their seat belts.

Get That Good Feeling

Familiarize yourself with the operation of your seat belts, as explained in your *Owner's Manual*. Wear them every time you drive your new Toyota, and encourage those who ride with you to do the same.

Remember: For peace of mind, buckle up … it's a good feeling!

Audio Systems

Your Toyota's original equipment radio and sound system components are covered under the terms of the Toyota New Vehicle Limited Warranty.

In the unlikely event your radio does require service, any authorized Toyota dealer is prepared to minimize inconvenience by exchanging your radio/sound system rather than sending it out for repair.

How it works:

- If the dealership determines that the radio cannot be repaired at the dealership, they will order a replacement radio and return your car to you.
- Once your replacement radio arrives at the dealership (usually within a few days), it will be installed in your vehicle at your convenience and you're on your way!

Note: In general, radio performance and particularly FM reception may be affected by such factors as natural terrain, man-made obstacles, and your distance from the radio station's transmitter. Please consult your *Owner's Manual* for further information on radio operation and performance.

EXTENDED PROTECTION FOR YOUR VEHICLE

Long-Term Commitment

Toyota is committed to your long-term satisfaction. It is our commitment to provide quality service for as long as you own your new Toyota, no matter how long that may be.

Today's marketplace has seen vehicle replacement costs accelerate, and many of our customers are deciding to keep their Toyotas longer. Consequently, many of you are concerned about the potential costs for major repairs as your Toyota ages. It is for this reason that more than 1,100 Toyota dealerships across the country now offer Toyota "Extra Care" or a similar service agreement for your vehicle.

Extended Protection

The Vehicle Service Agreement provides extended protection against unexpected repairs beyond the factory warranty on your Toyota. It helps you minimize the risk of these potential future costs.

Various service agreements are available to meet almost every vehicle protection need. Most plans offer additional service conveniences:

- Nationwide coverage
- Vehicle towing
- Substitute transportation
- Protection when you travel
- Transferability
- Easy claim service

Vehicle service agreements may be purchased directly through your local Toyota dealer. Each program is specific as to time, mileage, and component coverages. It is to your advantage to select a vehicle service agreement program that fully provides the extended coverage you desire. Your Toyota dealer can help you select the plan that is best for your protection needs.

TOYOTA EXTRA CARE

Preventive Service

Toyota is also aware that in today's market the cost of keeping a vehicle well maintained is ever increasing. Your Toyota dealer can help you manage service costs by offering you the option of pre-paying for vital services and inspections for your new Toyota. *Toyota Auto Care* or similar preventive service plans are offered by most Toyota dealers. These plans, like *Toyota Auto Care*, may include some of the following benefits:

- Engine oil and filter change
- Lubrication of key chassis parts
- 19-point inspection
- Emergency 24-hour roadside assistance
- Timed service reminders
- Computerized service history
- Transferability

Different intervals may be selected to meet your specific service needs. Ask your Toyota dealer about the many different plans available to help protect your vehicle for the years ahead.

AUTO CARE

WE SUPPORT

Toyota Quality Service

Part of the care that all vehicles require is regular replenishment of fluids, lubricants, and maintenance parts to guard against premature wear or failure. In addition, regular inspection of a vehicle's overall mechanical condition by trained technicians can provide the opportunity for minor repairs to be carried out quickly and economically before they lead to more extensive problems. Toyota's Recommended Maintenance Schedule provides factory-recommended guides for maintenance and inspection based on mileage, time, and the conditions under which the vehicle is regularly driven.

With proper maintenance, your Toyota will last longer and deliver maximum performance and reliability. Please see page 29 for your model's recommended maintenance schedule. Follow the schedule to help your Toyota serve you economically for many years to come.

Toyota Supports Technician Certification

The skill of the technician who actually services or repairs your Toyota is vitally important to your vehicle's operation and efficiency. To make sure your Toyota dealer gives you the best service available anywhere, Toyota created the Toyota Certified Technician Program. In addition, over 90 percent of all Toyota dealers participate in the technician certification program of the National Institute for Automotive Service Excellence (ASE).

Certified technicians are proven professionals. They have earned their certification by attending Toyota Technical Training classes and by passing a series of comprehensive written examinations. Next time you visit, ask your Toyota dealer to show you the technicians' credentials.

Genuine Toyota Parts

A network of more than 1,100 Toyota dealers throughout the U.S. is your guaranteed source for quality Genuine Toyota Parts. Genuine Toyota Parts are engineered and manufactured to the same high standards of quality and performance built into every Toyota product.

This extensive dealer network is dedicated to providing the parts you need to service your Toyota vehicle. Each dealer's parts inventory is further supplemented by a nationwide system of 11 electronically connected and strategically located Toyota Parts Distribution Centers. This comprehensive system provides the assurance that virtually any part from any Toyota vehicle in the U.S. is readily available to meet your parts and service needs.

TOYOTA PARTS CENTERS

Toyota Parts Centers

A network of over 430 Toyota dealerships throughout the U.S. offers one-stop shopping convenience for Toyota Do-It-Yourselfers. A Toyota Parts Center (TPC) is a parts store within the dealership that offers a full selection of automotive products. Included are Genuine Toyota maintenance and repair parts, Genuine Toyota Accessories, and a full line of brand name car-care products at competitive prices.

Most TPCs are open Saturdays and some evenings. Expert technical help is available to answer DIY parts questions. Also, "How To" brochures covering most common maintenance jobs and Toyota model-specific pocket application catalogs are available free of charge.

Stop by your local TPC and experience the service and value available to Toyota DIYers.

TOYOTA
PARTS CENTER



Toyota Express Lube

Toyota Express Lube dealers offer you a complete oil and filter change and 19-point inspection, in 29 minutes or less, *guaranteed,* or your next one's free! Toyota Express Lube combines all the convenience and value of a quick oil change with the quality and reliability of Genuine Toyota Parts and trained technicians that you've come to trust.

For a Toyota Express Lube oil change, no appointment is ever necessary. Just follow the signs and drive up to the Express Lube lane—you will be waited on promptly, and your guaranteed 29 minute oil and filter change will be done while you wait. And it's a great value too —Toyota Express Lube service is typically priced very competitively with franchised quick lube centers.

Call Toyota's Customer Assistance Center at 1-800-331-4331 for the nearest Toyota Express Lube location, and *"Catch the Express!"*





LIFETIME GUARANTEE PROGRAM

A Commitment to Quality and Customer Satisfaction

Toyota guarantees you'll only have to pay once! That's right; if replacement is ever necessary, for as long as you own the vehicle, Toyota provides complete parts *and* labor coverage for mufflers, exhaust pipes, shock absorbers, struts, and strut cartridges when you purchase these items and have them installed by your authorized Toyota dealer. This Lifetime Guarantee is our way of demonstrating to you Toyota's commitment to quality and customer satisfaction.

Remember, these top-quality Genuine Toyota Parts are manufactured to meet Toyota's high standards for fit and function. So don't compromise; when replacement time comes, count on your Toyota dealer for a lifetime!

Toyota mufflers, exhaust pipes, shocks, struts, and strut cartridges are guaranteed to the original purchaser for the life of the vehicle when installed by an authorized Toyota dealer. See dealer for full details.

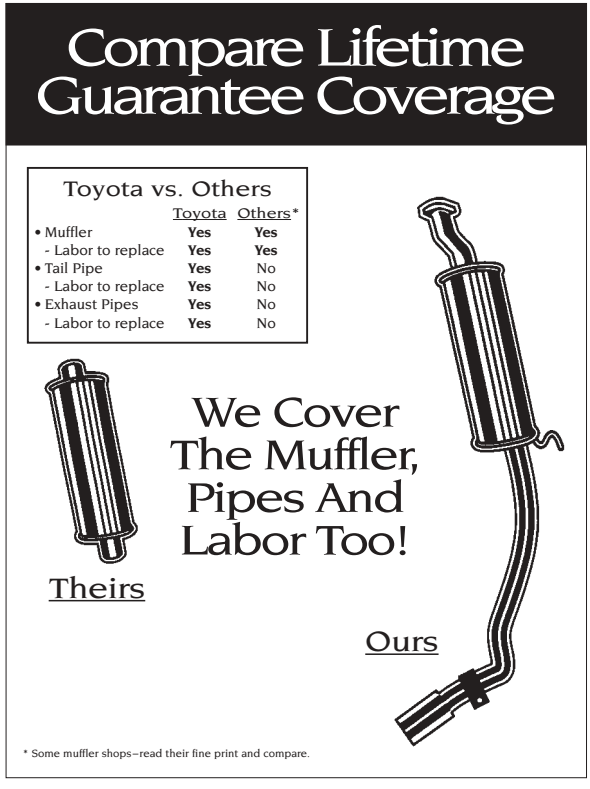

Genuine Toyota Chemicals

The Toyota Chemical Line is engineered to serve your car care needs. Formulated specifically for use with Toyota vehicles, this quality lineup includes everything for the care and maintenance of Toyota cars and trucks.

The Toyota Chemical Line includes appearance products, such as Liquid Car Wash and Fabric Spot Remover, and service items such as Rust Penetrants, Brake Cleaner, and EFI Injector Cleaner. All products are produced to meet or exceed Toyota's warranty requirements.

Toyota Antifreeze/Coolant

- Helps provide excellent long-term corrosion protection.
- Does not contain silicates that may harm water pump seals.
- Is specially formulated for Toyota engine cooling systems.
- Is tested and approved by Toyota.
- Is produced to meet or exceed Toyota's warranty requirements.



Toyota Motor Oils

- Are specially formulated for Toyota gasoline engines.
- Are tested and approved by Toyota.
- Are produced to meet or exceed Toyota's warranty requirements.
- Are approved for Toyota turbocharged engines.
- Are formulated to help save gas by reducing engine friction.

DEALER CERTIFICATE

28

We (the Dealer) want you to know that at the time your new _____ is being delivered that:

1. Based upon written notification furnished by TOYOTA, we have knowledge that this vehicle is covered by an Environmental Protection Agency (EPA) Certificate of Conformity.
2. We have made a visual inspection limited to those emission control devices or portions thereof which are visible without removal or adjustment of any components or systems of the vehicle, whether emission-related or otherwise. Based upon such visual inspection, there are no apparent deficiencies in the installation of emission control devices by TOYOTA. ("Emission control device" is limited for purposes of this certificate to all devices installed on a vehicle for the sole or primary purpose of controlling vehicle emissions and which were not in general use prior to 1968.)
3. We have performed all emission control system preparations required by TOYOTA prior to the sale of the vehicle, as set forth in the current predelivery service manual provided by TOYOTA.
4. Except as may be provided in Paragraph 5 below, if this vehicle fails an EPA-approved emission test prior to the expiration of three months or 4,000 miles (whichever comes first) from the date or mileage at the time of delivery to the ultimate purchaser, and the vehicle has been maintained and used in accordance with the written instructions for proper maintenance and use, then TOYOTA shall remedy the nonconformity free of charge to the vehicle owner under the terms of TOYOTA's emission performance warranty.
5. Check if the vehicle is a company car or demonstrator and complete the following:

   The vehicle with which this statement was delivered was placed in service as a demonstrator or company car prior to delivery. TOYOTA's emission performance warranty period commenced on the date the vehicle was first placed in service, namely on _____

Note: The dealer makes no representation or warranty that the emission control system or any part thereof is without defect nor that the system will properly perform. TOYOTA's emission performance warranty referred to above furnished with the vehicle is solely that of the manufacturer.

This statement is required by section 207 of the Clean Air Act (42 U.S.C. 7541) and the EPA regulations issued thereunder.

_____

(Dealership Name)

EVV

NAME/ADDRESS INFORMATION FORM

Check One:

- ☐ Same Owner, Name and/or Address Changed
- ☐ Same Owner, Additional Driver
- ☐ New Owner
- ☐ No Longer Have Vehicle—Sold or Traded to Individual Listed Below

Vehicle Identification Number (VIN)

Effective Date of This Information — Mo. / Day / Year

☐ Mr. ☐ Mrs. ☐ Ms. ☐ Miss ☐ Dr.

Individual OR Company:

First Name / M.I. / Last Name

Company Name

Address/P.O. Box

Apt./Suite Number

City / State / ZIP Code

Home Telephone Number / Ext. — Work Telephone Number / Ext.

Social Security Number/ Customer Reference

☐ Do not include on future mailings

FPO

FPO

NO POSTAGE
NECESSARY
IF MAILED
IN THE
UNITED STATES

BUSINESS REPLY MAIL

FIRST CLASS MAIL **PERMIT NO. 449** **TORRANCE, CA 90509**

POSTAGE WILL BE PAID BY ADDRESSEE

DIRECT RESPONSE DEPARTMENT A207
TOYOTA MOTOR SALES USA INC
PO BOX 2991
TORRANCE CA 90509-9941

FPO

EVV

NAME/ADDRESS INFORMATION FORM

Check One:

- ☐ Same Owner, Name and/or Address Changed
- ☐ Same Owner, Additional Driver
- ☐ New Owner
- ☐ No Longer Have Vehicle—Sold or Traded to Individual Listed Below

Vehicle Identification Number (VIN)

Effective Date of This Information — Mo. / Day / Year

☐ Mr. ☐ Mrs. ☐ Ms. ☐ Miss ☐ Dr.

Individual OR Company:

First Name / M.I. / Last Name

Company Name

Address/P.O. Box

Apt./Suite Number

City / State / ZIP Code

Home Telephone Number / Ext. — Work Telephone Number / Ext.

Social Security Number/ Customer Reference

☐ Do not include on future mailings

FPO

NO POSTAGE
NECESSARY
IF MAILED
IN THE
UNITED STATES

BUSINESS REPLY MAIL

FIRST CLASS MAIL PERMIT NO. 449 TORRANCE, CA 90509

POSTAGE WILL BE PAID BY ADDRESSEE

DIRECT RESPONSE DEPARTMENT A207
TOYOTA MOTOR SALES USA INC
PO BOX 2991
TORRANCE CA 90509-9941

FPO

SRS AIRBAG

RS06L-02

PRECAUTION

NOTICE:

- **The SUPRA is equipped with SRS, which comprises a driver airbag, front passenger airbag. Failure to carry out service operations in the correct sequence could cause the SRS to unexpectedly deploy during servicing, possibly leading to a serious accident. Further, if a mistake is made in servicing the SRS, it is possible that the SRS may fail to operate when required. Before performing servicing (including removal or installation of parts, inspection or replacement), be sure to read the following items carefully, then follow the correct procedures described in the repair manual.**
- **Malfunction symptoms of the SRS are difficult to confirm, so the DTCs become the most important source of information when troubleshooting. When troubleshooting the SRS, always inspect the DTCs before disconnecting the battery.**
- **Even in cases of a minor collision where the SRS does not deploy, the steering wheel pad, front passenger airbag assembly and airbag sensor assembly should be inspected (See page RS-9 , RS-22 and RS-34).**
- **Never use SRS parts from another vehicle. When replacing parts, replace them with new parts.**
- **Never disassemble and repair the steering wheel pad, front passenger airbag assembly or airbag sensor assembly in order to reuse it.**
- **If the steering wheel pad, front passenger airbag assembly or airbag sensor assembly has been dropped, or if there are cracks, dents or other defects in the case, bracket or connector, replace them with new ones.**
- **Use a volt/ohmmeter with high impedance (10 kΩ/V minimum) for troubleshooting the system's electrical circuits.**
- **Information labels are attached to the periphery of the SRS components. Follow the instructions on the notices.**
- **After work on the SRS is completed, perform the SRS warning light check (See page DI-557).**
- **If the vehicle is equipped with a mobile communication system, refer to the precaution in the IN section.**

CAUTION:

- **Work must be started after 90 seconds from when the ignition switch is turned to the "LOCK" position and the negative (-) terminal cable is disconnected from the battery.**
  (The SRS is equipped with a back-up power source so that if work is started within 90 seconds from disconnecting the negative (-) terminal cable of the battery, the SRS may be deployed.)
- **When the negative (-) terminal cable is disconnected from the battery, the memory of the clock and audio system will be canceled. So before starting work, make a record of the contents memorized in the audio memory system. When work is finished, reset the audio systems as they were before and adjust the clock. To avoid erasing the memory in each memory system, never use a back- up power supply from outside the vehicle.**
- **Before repairs, remove the airbag sensor if shocks are likely to be applied to the sensor during repairs.**
- **Do not expose the steering wheel pad, front passenger airbag assembly or airbag sensor assembly directly to hot air or flames.**

RS0OL-01

OPERATION

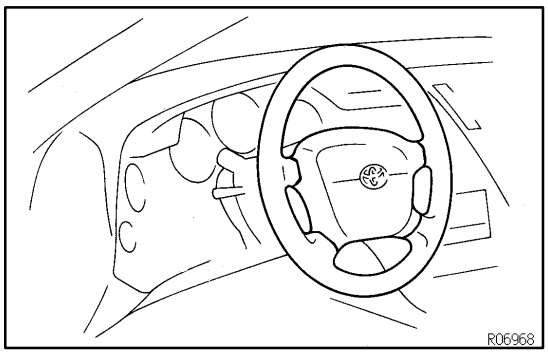

1. STEERING WHEEL PAD (with AIRBAG)

The inflater and bag of the SRS are stored in the steering wheel pad and cannot be disassembled. The inflater contains a squib, igniter charge, gas generant, etc., and inflates the bag when instructed by the airbag sensor assembly.

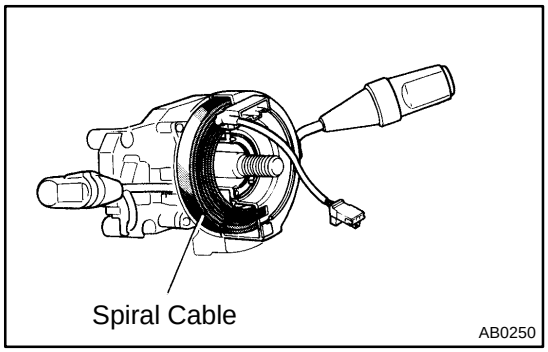

2. SPIRAL CABLE (in COMBINATION SWITCH)

A spiral cable is used as an electrical joint from the vehicle body side to the steering wheel.

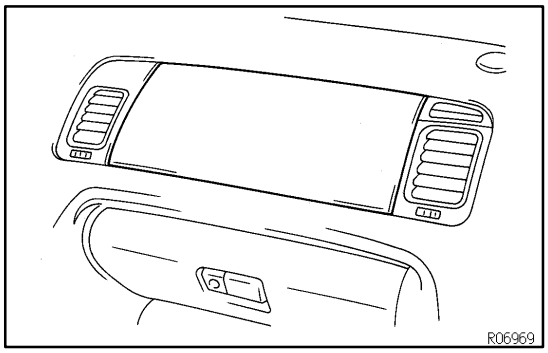

3. FRONT PASSENGER AIRBAG ASSEMBLY

The inflater and bag of the SRS are stored in the front passenger airbag assembly and cannot be disassembled. The inflater contains a squib, igniter charge and gas generant, etc., and inflates the bag when instructed by the airbag sensor assembly.

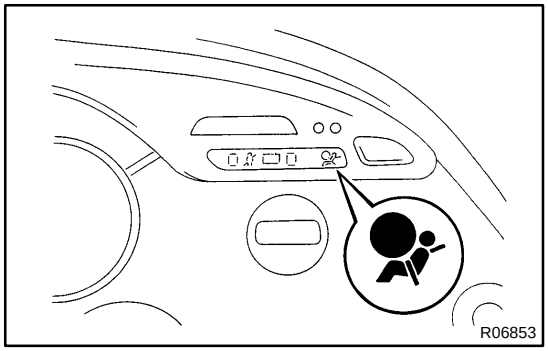

4. SRS WARNING LIGHT

The SRS warning light is located on the combination meter. It goes on to alert the driver of trouble in the system when a malfunction is detected in the airbag sensor assembly. In normal operation conditions when the ignition switch is turned to the ACC or ON position, the light goes on for about 6 seconds and then goes off.

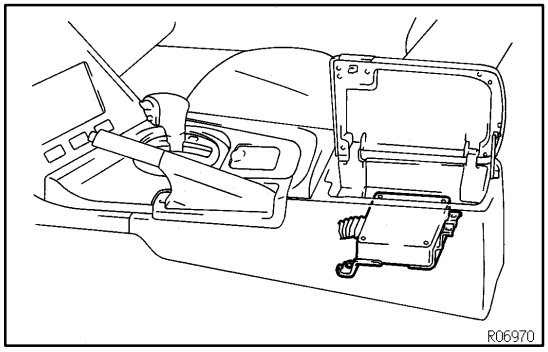

5. AIRBAG SENSOR ASSEMBLY

The airbag sensor assembly is mounted on the floor inside the lower center finish panel. The airbag sensor assembly consists of an airbag sensor, safing sensor, diagnosis circuit and ignition control, drive circuit, etc. It receives signals from the airbag sensor and judges whether the SRS must be activated or not.

6. SRS CONNECTORS

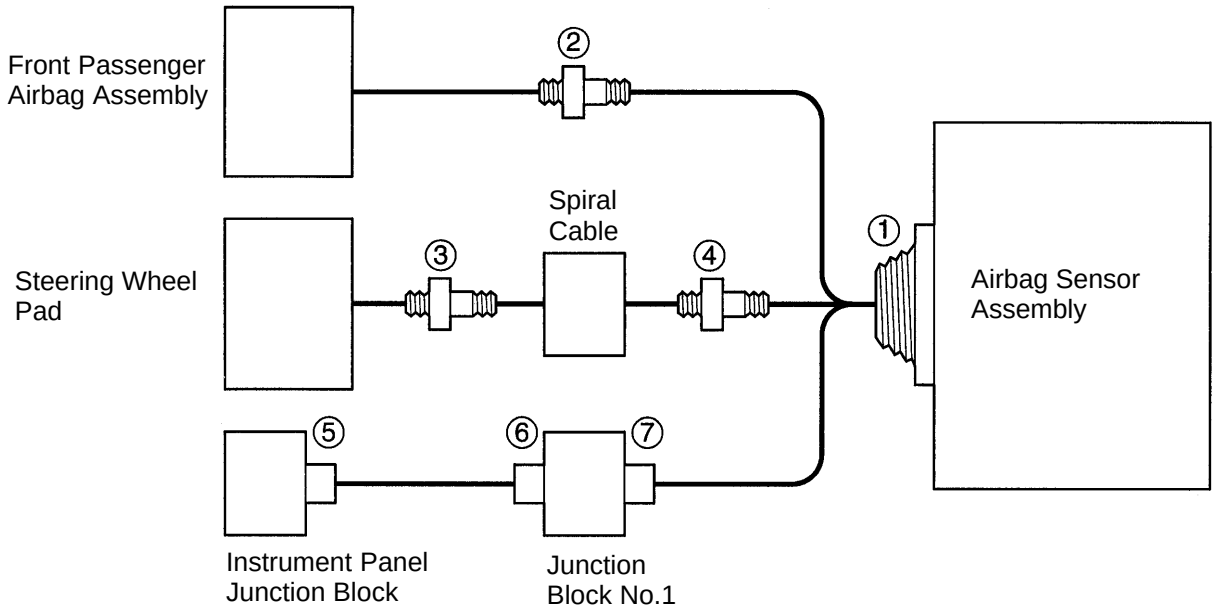

No.	Item	Application
(1)	Terminal Twin-Lock Mechanism	Connectors 1, 2, 3, 4, 5, 6, 7
(2)	Airbag Activation Prevention Mechanism	Connectors 1, 2, 3, 4
(3)	Electrical Connection Check Mechanism	Connectors 1
(4)	Connector Twin-Lock Mechanism	Connectors 4, 5, 6, 7

(a) All connectors in the SRS are colored in yellow to distinguish them from other connectors. Connectors having special functions and specifically designed for the SRS are used in the locations shown above to ensure high reliability. These connectors use durable gold-plated terminals.

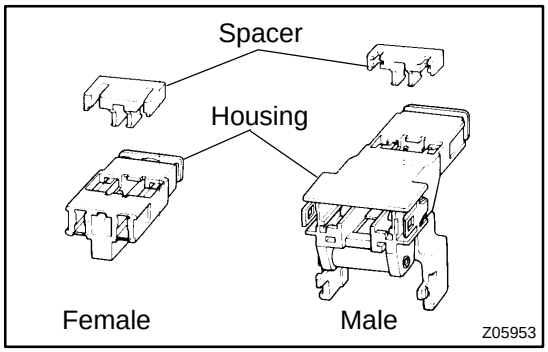

(1) Terminal Twin-Lock Mechanism
Each connector has a two-piece component consisting of a housing and a spacer. This design enables the terminal to be locked securely by two locking devices (the retainer and the lance) to prevent terminals from coming out.

(2) Airbag Activation Prevention Mechanism
Each connector contains a short spring plate. When the connector is disconnected, the short spring plate automatically connects the power source and grounding terminals of the squib.

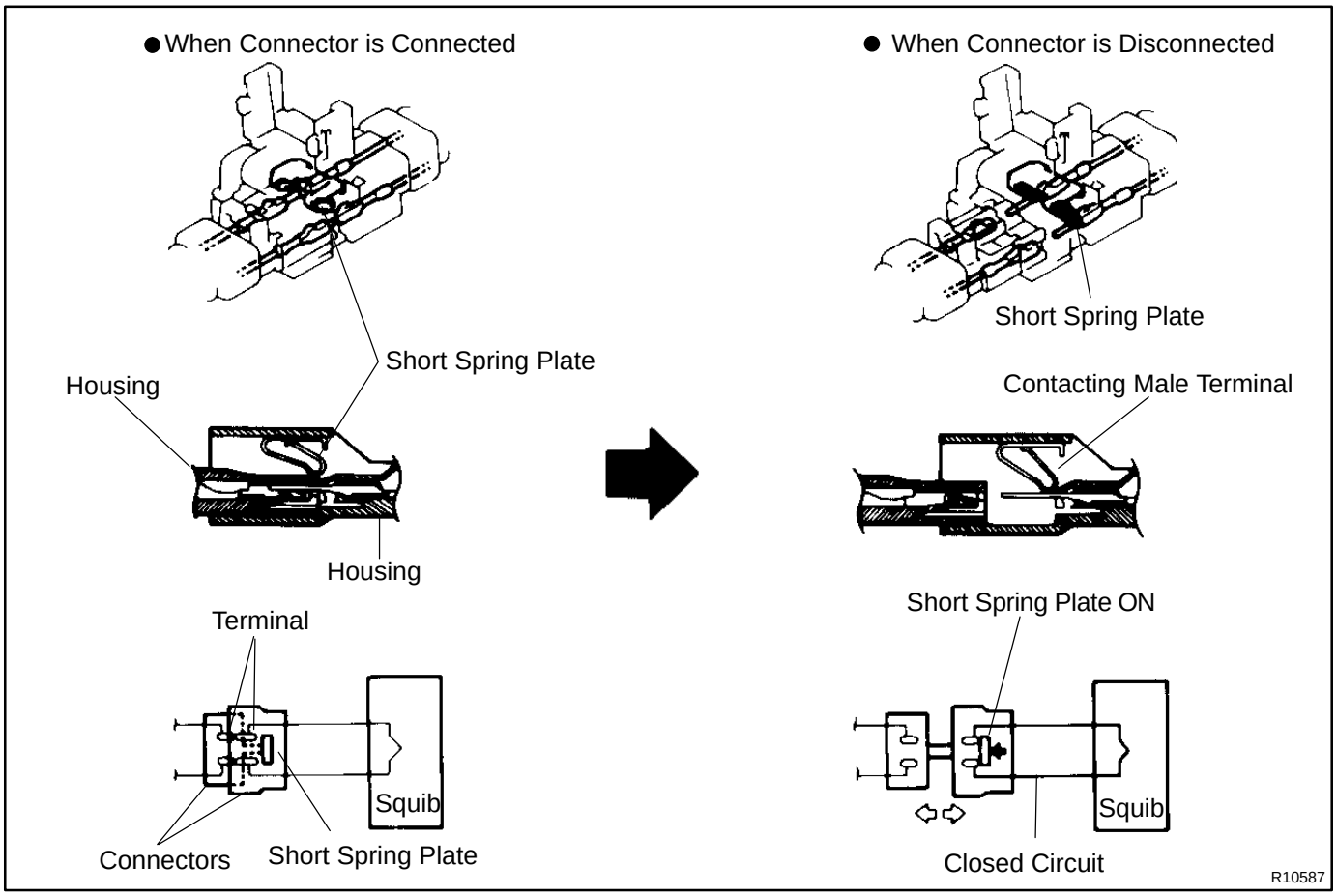

HINT:
The type of connector shown on the previous page is used for connectors ”2”, ”3” and ”4” in the diagram on the previous page. Terminal side, but the operating principle is the same.

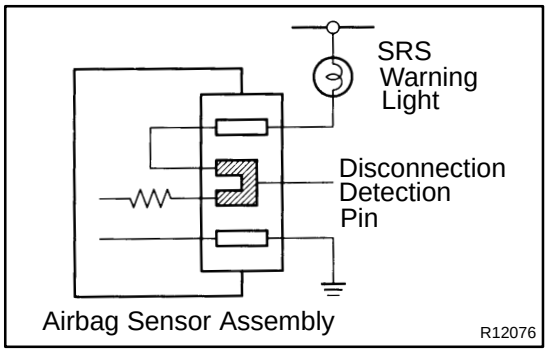

(3) Electrical Connection Check Mechanism
This mechanism electrically checks that connectors are connected correctly and completely. The electrical connection check mechanism is designed so that the disconnection detection pin connects with the diagnosis terminals when the connector housing lock is locked.

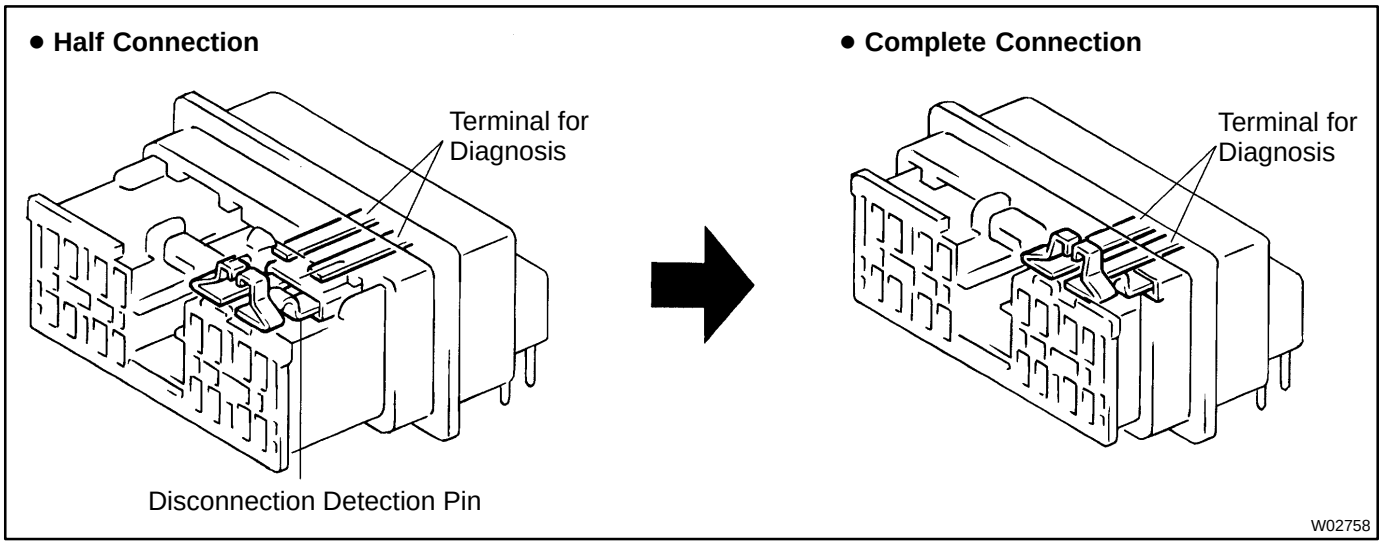

HINT:
The illustration shows connector ”1”, ”2”, ”3”.

(4) Connector Twin-Lock Mechanism
With this mechanism connectors (male and female connectors) are locked by 2 locking devices to increase the connection reliability. If the primary lock is incomplete, ribs interfere and prevent the secondary lock.

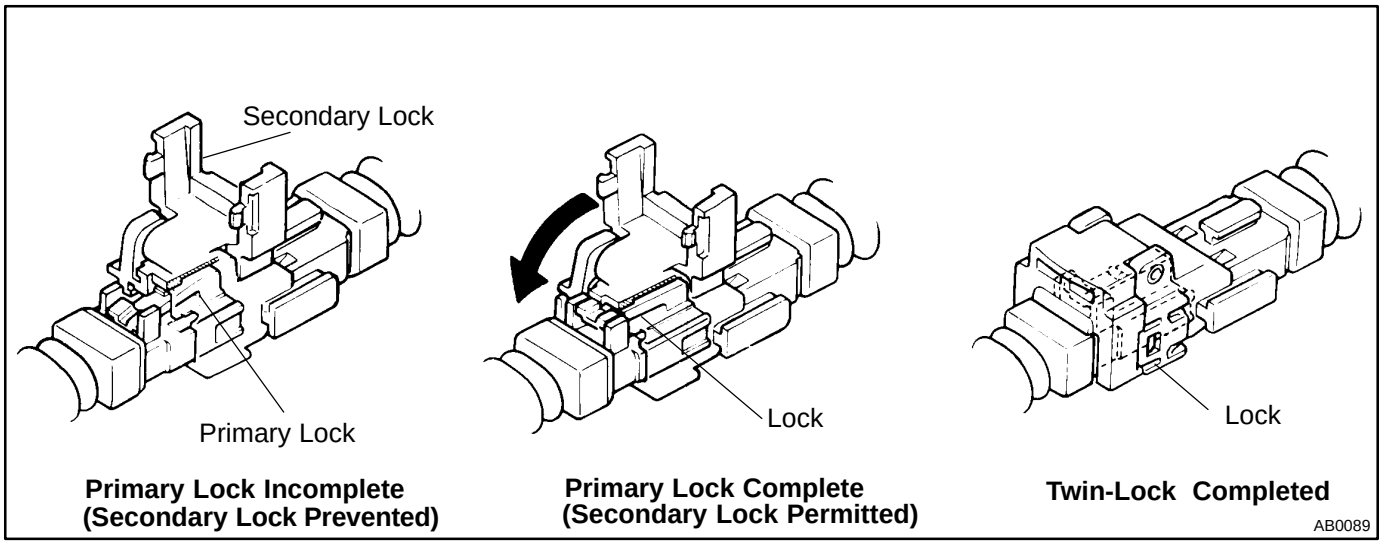

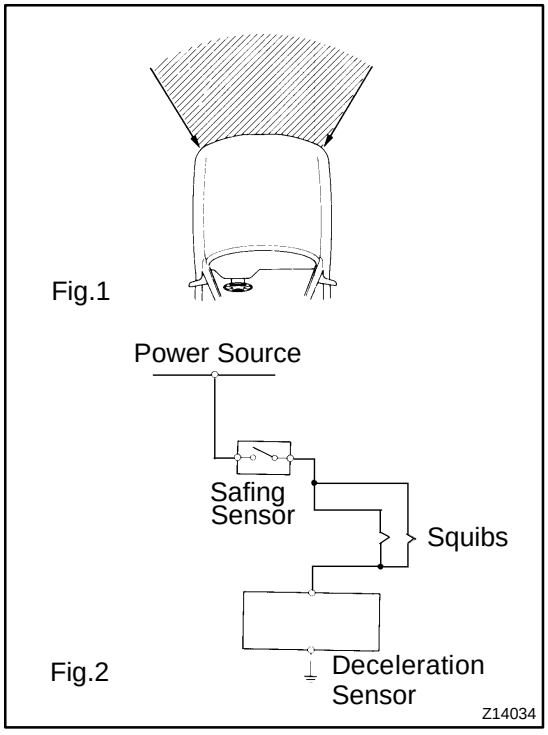

(b) When the vehicle is involved in a frontal collision in the hatched area (Fig. 1) and the shock is larger than the predetermined level, the SRS is activated automatically. A safing sensor is designed to go on at a smaller deceleration rate than the airbag sensor. As illustrated in Fig. 2, ignition is caused when current flows to the squib, which happens when a safing sensor and the deceleration sensor go on simultaneously. When a deceleration force acts on the sensors, 2 squibs in the driver airbag and front passenger airbag ignite and generate gas. The gas discharging into the driver airbag and front passenger airbag rapidly increases the pressure inside the bags, breaking open the steering wheel pad and instrument panel door. Bag inflation then ends, and the bags deflate as the gas is discharged through discharge holes at the bag's rear or side.

STEERING WHEEL PAD AND SPIRAL CABLE

RS06N-02

COMPONENTS

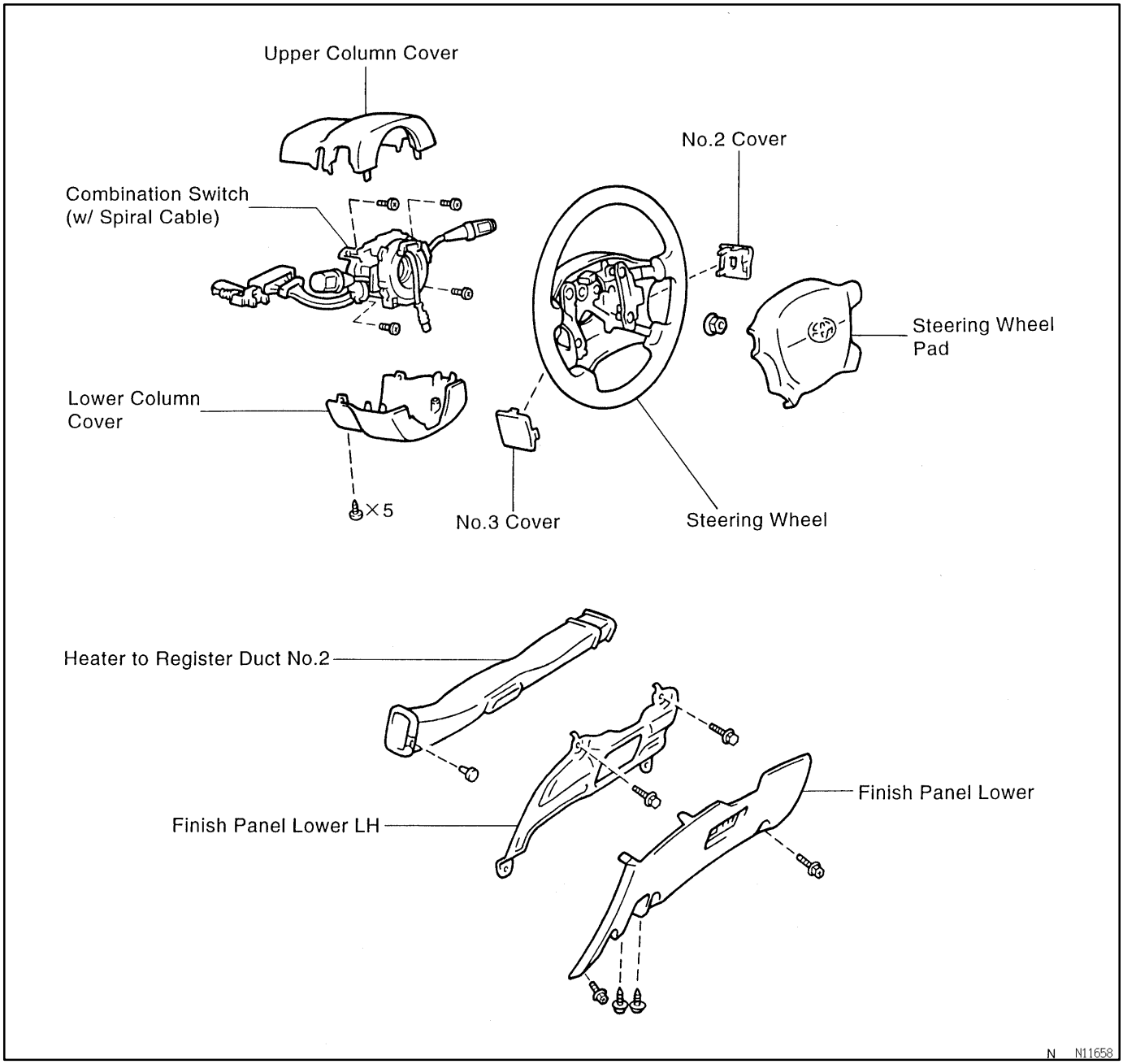

RS0OM-01

INSPECTION

1. VEHICLES NOT INVOLVED IN A COLLISION

(a) Do a diagnostic system check.
(See page DI-557)

(b) Do a visual check which includes the following items with the steering wheel pad (with airbag) installed in the vehicle.
Check cuts, minute cracks or marked discoloration on the steering wheel pad top surface and in the grooved portion.

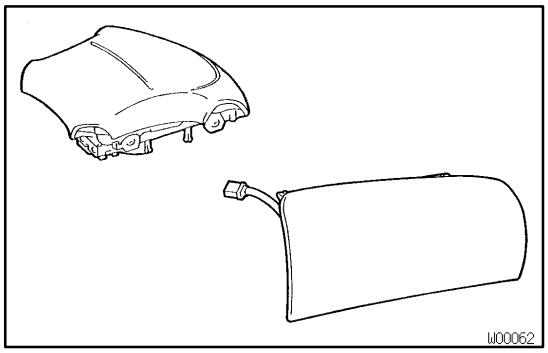

2. VEHICLE INVOLVED IN A COLLISION AND AIRBAG IS NOT DEPLOYED

(a) Do a diagnostic system check.
(See page DI-557)

(b) Do a visual check which includes the following items with the steering wheel pad (with airbag) removed from the vehicle.

- Check cuts minute cracks or marked discoloration on the steering wheel pad top surface and in the grooved portion.
- Check cuts and cracks in wire harness, and chipping in connectors.
- Check the deformation of the horn button contact plate of the steering wheel.

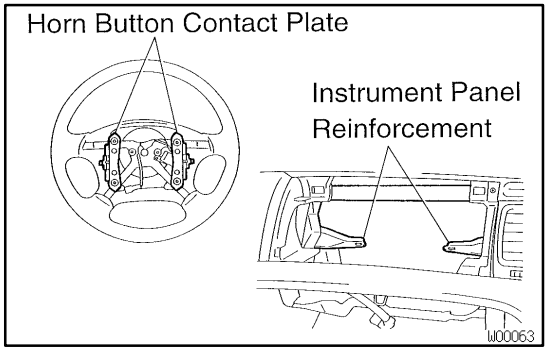

HINT:

- If the horn button contact plate of the steering wheel is deformed, never repair it. Always replace the steering wheel assembly with a new one.

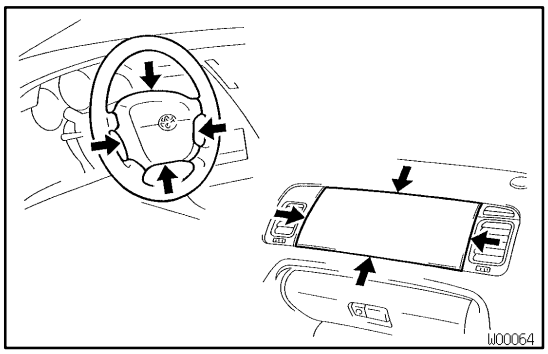

- There should be no interference between the steering wheel pad and steering wheel, and the clearance should be uniform all the way around when the new steering wheel pad is installed on the steering wheel.

CAUTION:
For removal and installation of the steering wheel pad, see page SR-1 1, SR-21 and be sure to follow the correct procedure.

3. VEHICLE INVOLVED IN A COLLISION AND AIRBAG IS DEPLOYED

(a) Do a diagnostic system check.
(See page DI-557)

(b) Do a visual check which includes the following items with the steering wheel pad (with airbag) removed from the vehicle.
- Check the deformation on the horn button contact plate of the steering wheel.
- Check the damage on the spiral cable connector and wire harness.

HINT:
- If the horn button contact plate of the steering wheel is deformed, never repair it. Always replace the steering wheel assembly with a new one.
- There should be no interference between the steering wheel pad and steering wheel, and the clearance should be uniform all the way around when the new steering wheel pad is installed on the steering wheel.

RS0ON-01

DISPOSAL

HINT:

When a scrapping vehicle equipped with an SRS or disposing of a steering wheel pad (with airbag), always first deploy the airbag in accordance with the procedure described below. If any abnormality occurs with the airbag deployment, contact the SERVICE DEPT. of TOYOTA MOTOR SALES, U.S.A., INC. When disposing of a steering wheel pad with an airbag deployed in a collision, follow the same procedure given in step 1-(g) in "DISPOSAL".

CAUTION:

- **Never dispose of a steering wheel pad which has an undeployed airbag.**
- **The airbag produces a sizeable exploding sound when it deploys, so perform the operation out-of-doors and where it will not create a nuisance to nearby residents.**

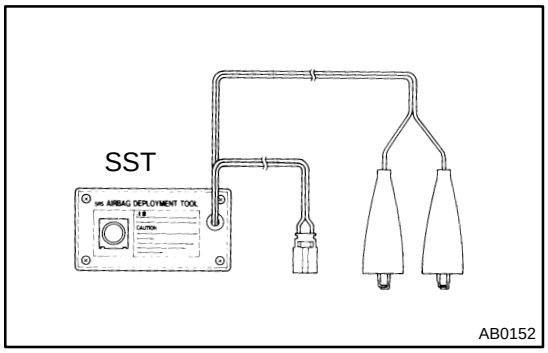

- **When deploying the airbag, always use the specified SST (SRS Airbag Deployment Tool). Perform the operation in a place away from electrical noise.**
  SST 09082-00700, 09082-00760
- **When deploying an airbag, perform the operation at least 10 m (33 ft) away from the steering wheel pad.**
- **The steering wheel pad is very hot when the airbag is deployed, so leave it alone for at least 30 minutes after deployment.**
- **Use gloves and safety glasses when handling a steering wheel pad with the deployed airbag.**
- **Always wash your hands with water after completing the operation.**
- **Do not apply water, etc. to a steering wheel pad with the deployed airbag.**

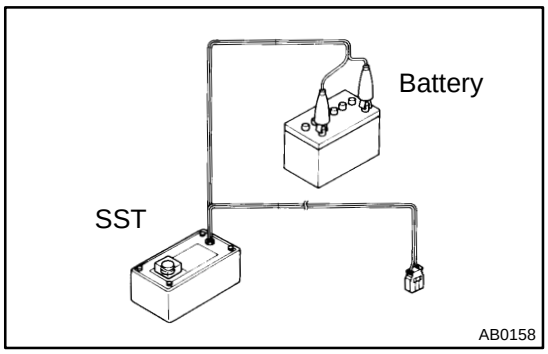

1. AIRBAG DEPLOYMENT WHEN SCRAPPING VEHICLE

HINT:
Have a battery ready as the power source to deploy the airbag.

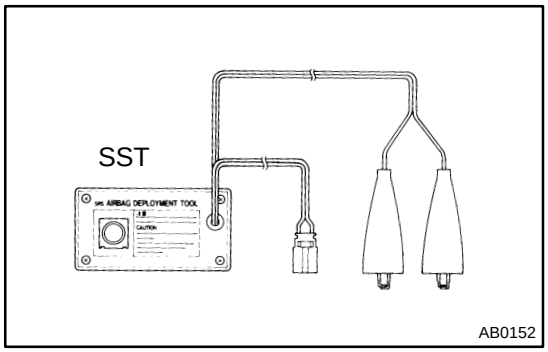

(a) Confirm functioning of the SST.

CAUTION:
When deploying the airbag, always use the specified SST: SRS Airbag Deployment Tool.

SST 09082-00700

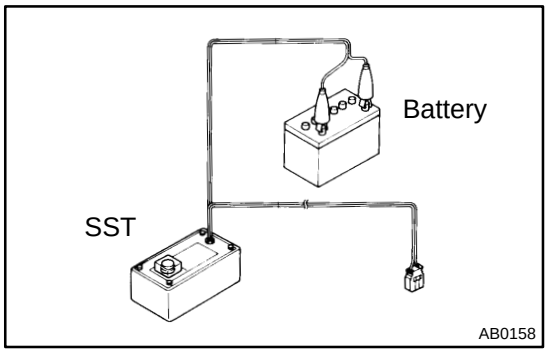

(1) Connect the SST to the battery.
Connect the red clip of the SST to the battery positive (+) terminal and the black clip to the battery negative (-) terminal.

HINT:
Do not connect the yellow connector which will be connected with the supplemental restraint system.

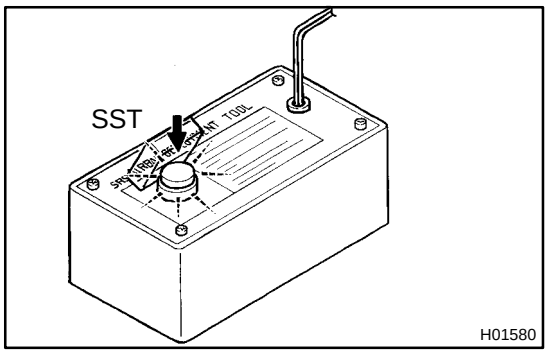

(2) Confirm functioning of the SST.
Press the SST activation switch, and check that the LED of the SST activation switch lights up.

CAUTION:
If the LED lights up when the activation switch is not being pressed, SST malfunction is probable, so definitely do not use the SST.

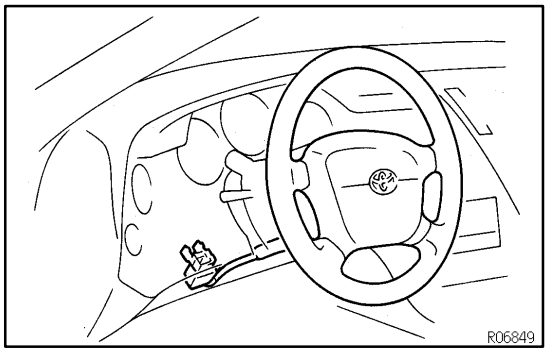

(b) Install the SST.

CAUTION:
Check that there is no looseness in the steering wheel and steering wheel pad.

(1) Remove the finish panel lower and finish panel lower LH.
(2) Remove the heater to register duct No. 2.
(3) Disconnect the airbag connector of the spiral cable.

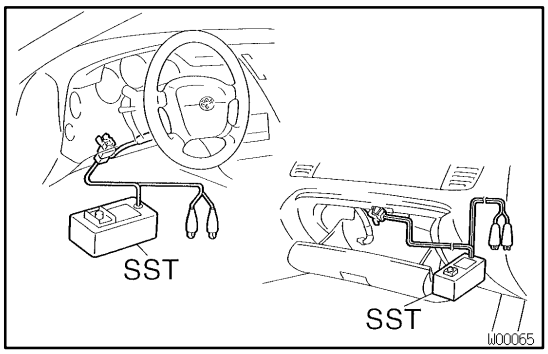

(4) Connect the SST connector to the airbag connector of the spiral cable.

SST 09082-00700

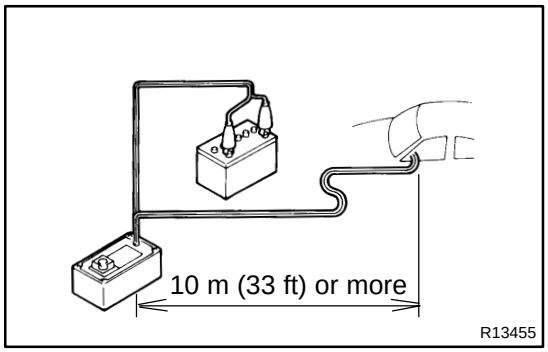

(5) Move the SST at least 10 m (33 ft) away from the front of the vehicle.

(6) Close all the doors and window of the vehicle.

NOTICE:

Take care not to damage the SST wire harness.

(7) Connect the SST red clip to the battery positive (+) terminal and the black clip to the negative (-) terminal.

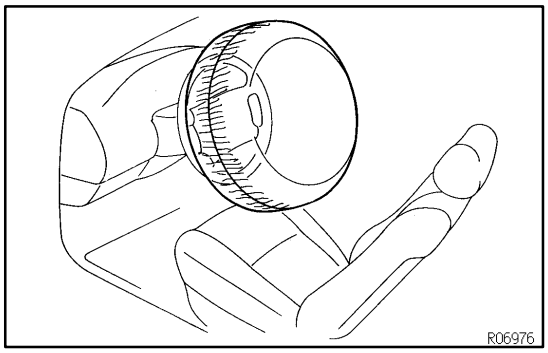

(c) Deploy the airbag.

(1) Confirm that no one is inside the vehicle or within 10 m (33 ft) area around the vehicle.

(2) Press the SST activation switch and deploy the airbag.

HINT:

The airbag deploys simultaneously as the LED of the SST activation switch lights up.

(d) Dispose of steering wheel pad (with airbag).

CAUTION:

- **The steering wheel pad is very hot when the airbag is deployed, so leave it alone for at least 30 minutes after deployment.**
- **Use gloves and safety glasses when handling a steering wheel pad with the deployed airbag.**
- **Always wash your hands with water after completing the operation.**
- **Do not apply water, etc. to a steering wheel pad with the deployed airbag.**

(1) When scrapping a vehicle, deploy the airbag and scrap the vehicle with the steering wheel pad still installed.

(2) When moving a vehicle for scrapping which has a steering wheel pad with deployed airbag, use gloves and safety glasses.

2. DEPLOYMENT WHEN DISPOSING OF STEERING WHEEL PAD ONLY

NOTICE:

- **When disposing of the steering wheel pad (with airbag) only, never use the customers vehicle to deploy the airbag.**
- **Be sure to follow the procedure given below when deploying the airbag.**

HINT:

Have a battery ready as the power source to deploy the airbag.

(a) Remove the steering wheel pad.
(See page SR-1 1)

CAUTION:

When storing the steering wheel pad, keep the upper surface of the pad facing upward.

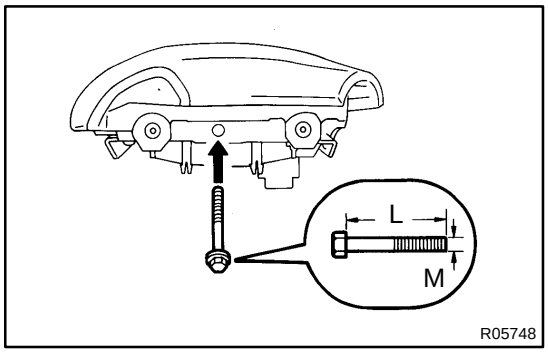

(b) Fix the steering wheel pad to the disc wheel with tire.
(1) Install the 2 bolts with washers in the 2 bolt holes on the steering wheel pad.

Bolt:
L: 35. mm (1.387 in.)
M: 6.0 mm (0.236 in.)
Pitch: 1.0 mm (0.039 in.)

NOTICE:

- **Tighten the bolts by hand until the bolts become difficult to turn.**
- **Do not tighten the bolts too much.**

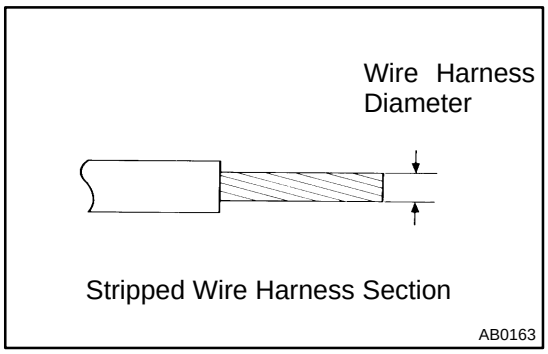

(2) Using a service-purpose wire harness tie down the steering wheel pad to the disc wheel.

Wire harness: Stripped wire harness section 1.25 mm^2 or more (0.0019 in^2. or more).

HINT:

To calculate the square of the stripped wire harness section:

Square - 3.14 x $(Diameter)^2$ divided by 4

CAUTION:

If a wire harness which is too thin or some other thing is used to tie down the steering wheel pad, it may be snapped by the shock when the airbag is deployed. This is highly dangerous. Always use a wire harness for vehicle use which is at least 1.25 mm^2 (0.0019 in^2).

(3) Using 3 wire harness, wrap the wire harness at least 2 times each around the bolts installed on the left and right sides of the steering wheel pad.

CAUTION:

- **Tightly wind the wire harness around the bolts so that there is no slack.**
- **If there is slackness in the wire harness, the steering wheel pad may come loose due to the shock when the airbag is deployed. This is highly dangerous.**

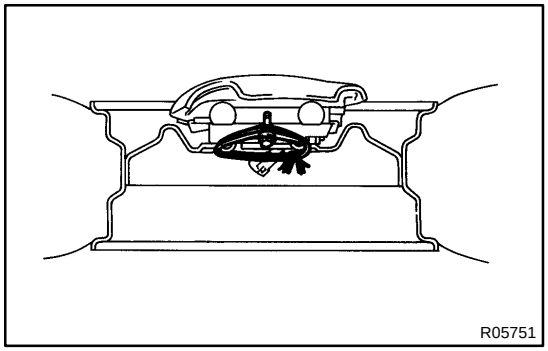

(4) Face the upper surface of the steering wheel pad upward. Separately tie the left and right sides of the steering wheel pad to the disc wheel through the hub nut holes. Position the steering wheel pad connector so that it hangs downward though a hub hole in the disc wheel.

CAUTION:

- **Make sure that the wire harness is tight. It is very dangerous when looseness in the wire harness results in the steering wheel pad coming free through the shock from the airbag deploying.**
- **Always tie down the steering wheel pad with the pad side facing upward. It is very dangerous if the steering wheel pad is tied down with the metal surface facing upward as the wire harness will be cut by the shock of the airbag deploying and the steering wheel pad will be thrown into the air.**

NOTICE:

The disc wheel will be marked by airbag deployment, so use the spare disc wheel.

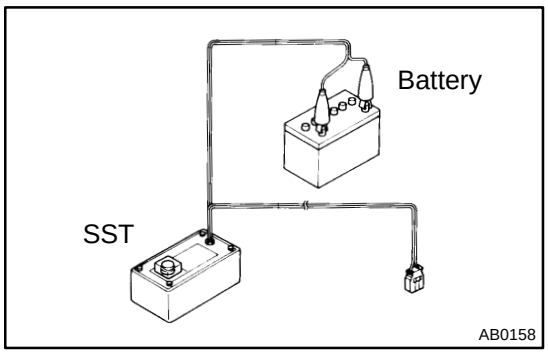

(c) Confirm functioning of the SST.
SST 09082-00700

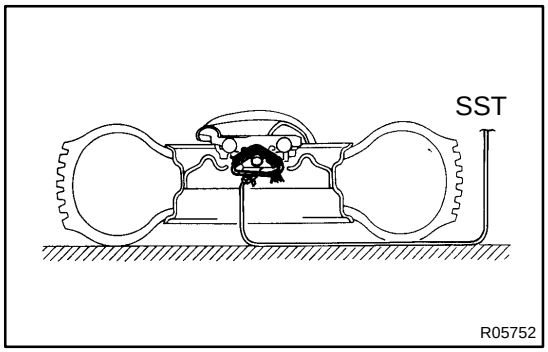

(d) Install the SST.

CAUTION:

Place the disc wheel on the level ground.

Connect the SST connector to the steering wheel pad connector.
SST 09082-00700

NOTICE:

To avoid damaging the SST connector and wire harness, do not lock the secondary lock of the twin lock. Also, secure some slack for the SST wire harness inside the disc wheel.

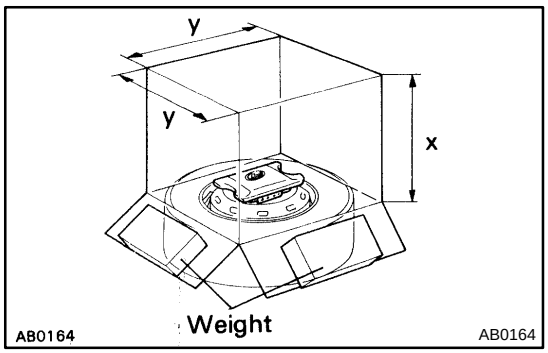

(e) Cover the steering wheel pad with cardboard box or tires.

- Covering method using cardboard box:
  Cover the steering wheel pad with the cardboard box and weight the cardboard box down in 4 places with at least 196 N (20 kg, 44 lb).

  Size of cardboard box:
  Must exceed the following dimensions:
  x=460 mm (18.11 in.)
  When dimension of the cardboard box exceeds the diameter of the disc wheel with tire to which the steering wheel pad is tied -
  x=460 mm (18.11 in.) + width of tire
  y= 650 mm (25.59 in.)

NOTICE:

If a cardboard box smaller than the specified size is used, the cardboard box will be broken by the shock from the airbag deployment.

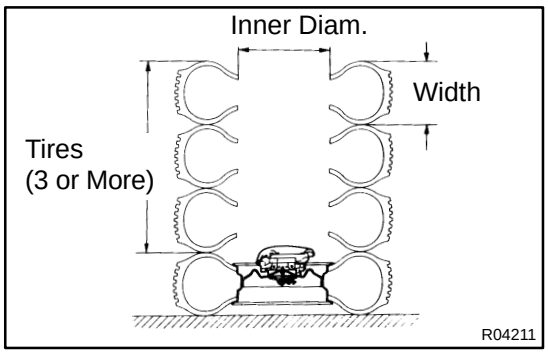

- Covering method using tires:
  Place at least 3 tires without disc wheel on top of the disc wheel with tire to which the steering wheel pad is tied.

Tire size: Must exceed the following dimensions-
Width: 185 mm (7.28 in.)
Inner diameter: 360 mm (14.17 in.)

CAUTION:
Do not use tires with disc wheels.
NOTICE:
The tires may be marked by the airbag deployment, so use the spare tires.

(f) Deploy the airbag.
  (1) Connect the SST red clip to the battery positive (+) terminal and the black clip to the battery negative (-) terminal.
  (2) Check that no one is within 10 m (33 ft) area around the disc wheel which the steering wheel pad is tied to.
  (3) Press the SST activation switch and deploy the airbag.

HINT:
The airbag deploys simultaneously as the LED of the SST activation switch lights up.

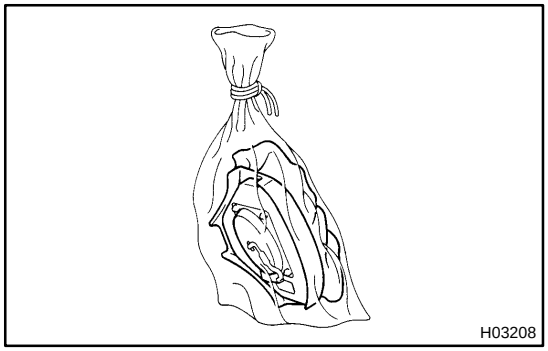

(g) Dispose of the steering wheel pad (with airbag).

CAUTION:
- **The steering wheel pad is very hot when the airbag is deployed, so leave it alone for at least 30 minutes after deployment.**
- **Use gloves and safety glasses when handling a steering wheel pad with deployed airbag.**
- **Always wash your hands with water after completing the operation.**
- **Do not apply water, etc. to a steering wheel pad with deployed airbag.**
  (1) Remove the steering wheel pad from the disc wheel.
  (2) Place the steering wheel pad in a vinyl bag, tie the end tightly and dispose of it in the same way as other general parts disposal.

RS06R-01

REPLACEMENT

REPLACEMENT REQUIREMENTS

In the following cases, replace the steering wheel pad, steering wheel or spiral cable.

- If the airbag has been deployed.
- If the steering wheel pad or spiral cable has been found to be faulty in troubleshooting.
- If the steering wheel pad, steering or spiral cable has been found to be faulty during the check in items. (See page RS-9)
- If the steering wheel pad has been dropped.

CAUTION:

For removal and installation of the steering wheel pad, see page SR-1 1 and SR-21 . Be sure to follow the correct procedure.

FRONT PASSENGER AIRBAG ASSEMBLY

RS06T-02

COMPONENTS

mm (in.)

Code	Shape	Size	Code	Shape	Size
Ⓐ	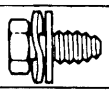	ø = 8 (0.32) L = 18 (0.71)	Ⓑ		ø = 6 (0.24) L = 22 (0.87)

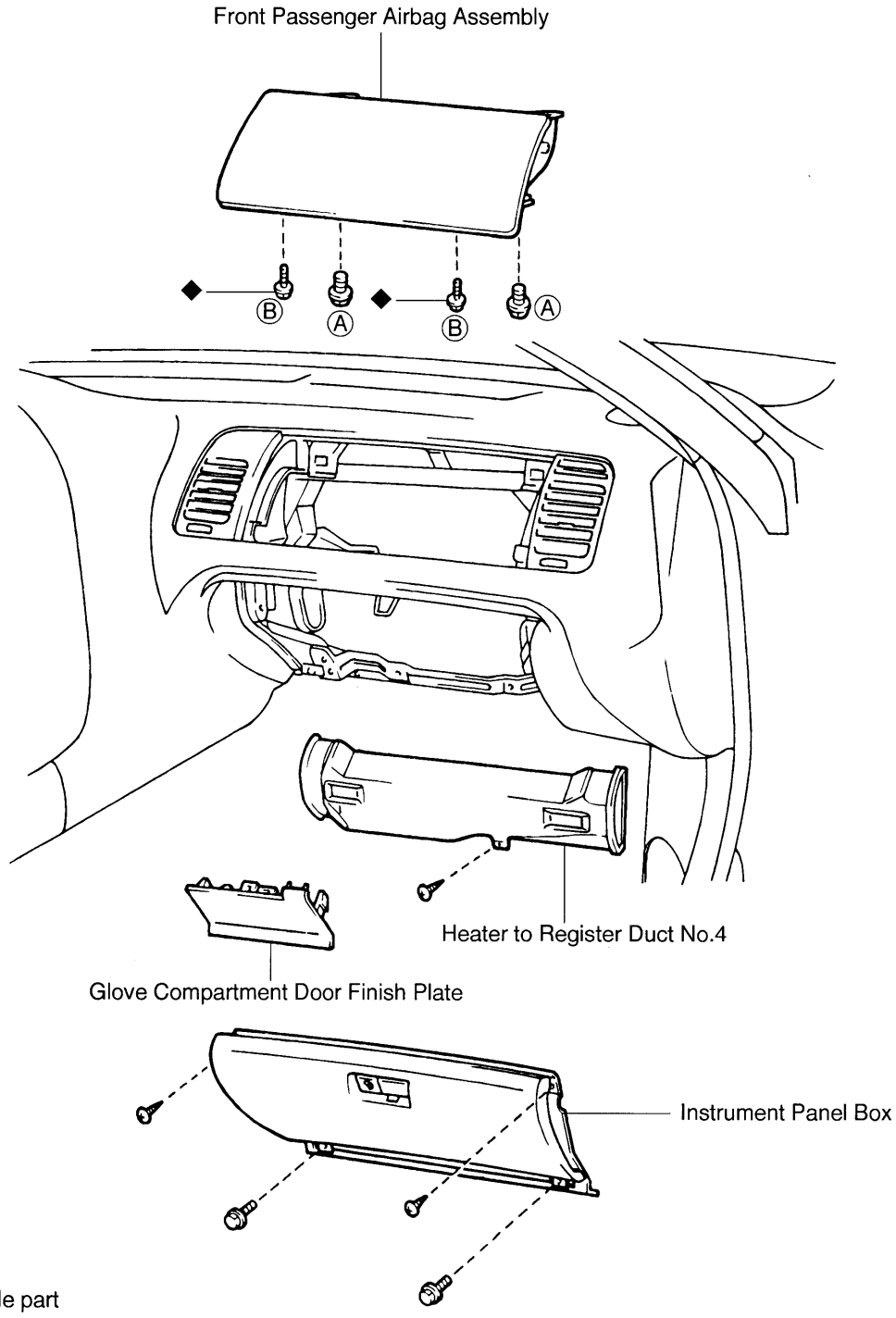

R06957

◆Non-reusable part

Z13613

RS0OO-01

REMOVAL

NOTICE:

- **If the wiring connector of the SRS is disconnected and the ignition switch is at ON or ACC position, DTCs will be recorded.**
- **Never use the airbag parts from another vehicle. When replacing parts, replace with new parts.**

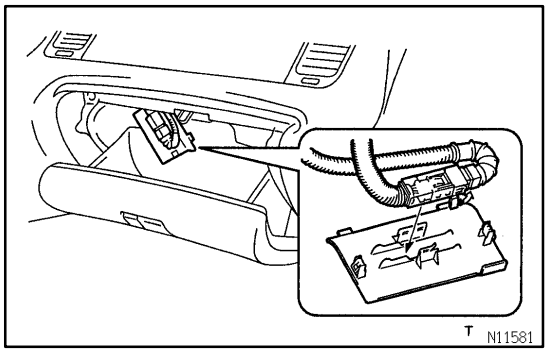

1. DISCONNECT AIRBAG CONNECTOR

(a) Remove the glove compartment door finish plate inside the instrument panel box.

NOTICE:

When handling the airbag connector, take care not to damage the airbag wire harness.

(b) Pull up the connector.

(c) Disconnect the front passenger airbag connector.

2. REMOVE THESE PARTS: (See page BO-50)

(a) Instrument panel box

(b) Heater to register duct No.4

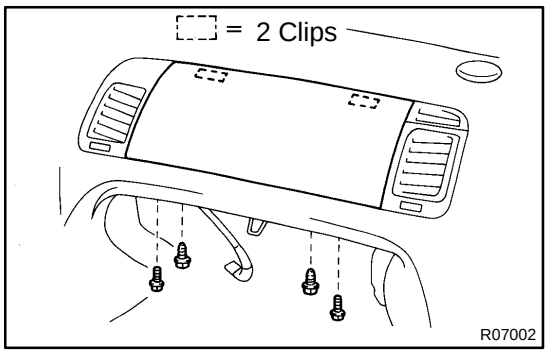

3. REMOVE FRONT PASSENGER AIRBAG ASSEMBLY

(a) Remove the 4 bolts.

(b) Pull the front passenger airbag assembly to remove it.

CAUTION:

- **Do not store the front passenger airbag assembly with the airbag deployment direction facing downward.**
- **Never disassemble the front passenger airbag assembly.**

RS0OP-01

INSPECTION

1. VEHICLES NOT INVOLVED IN A COLLISION

(a) Do a diagnostic system check.
(See page DI-557)

(b) Do a visual check which includes the following items with the front passenger airbag assembly installed in the vehicle.
Check cuts, minute cracks or marked discoloration on the front passenger airbag assembly and instrument panel.

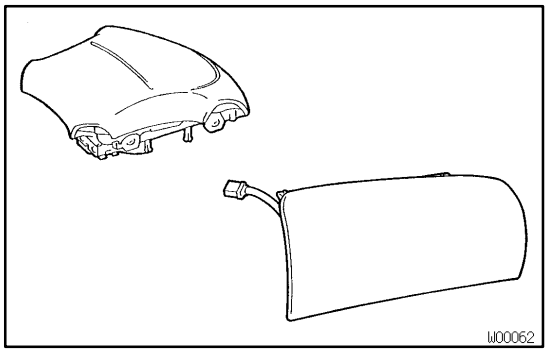

2. VEHICLE INVOLVED IN A COLLISION AND AIRBAG IS NOT DEPLOYED

(a) Do a diagnostic system check.
(See page DI-557)

(b) Do a visual check which includes the following items with the front passenger airbag assembly removed from the vehicle.

- Check cuts minute cracks or marked discoloration on the front passenger airbag assembly.
- Check cuts and cracks in wire harness, and for chipping in connectors.
- Check the deformation or cracks on the instrument panel and instrument panel reinforcement.

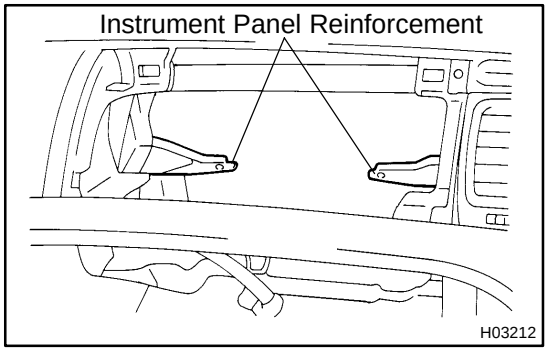

HINT:

- If the instrument panel or instrument panel reinforcement is deformed or cracked, never repair it. Always replace it with a new one.

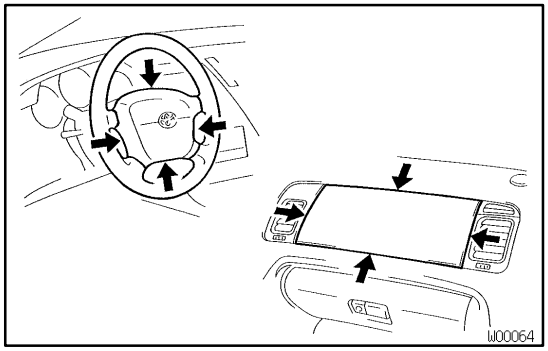

- There should be no interference between the instrument panel and the front passenger airbag assembly.

CAUTION:
For removal and installation of the front passenger airbag assembly, see page RS-21 , RS-31 and be sure to follow the correct procedure.

3. VEHICLE INVOLVED IN A COLLISION AND AIRBAG IS DEPLOYED

(a) Do a diagnostic system check.
(See page DI-557)

(b) Do a visual check which includes the following items with the front passenger airbag assembly removed from the vehicle.

- Check the deformation or cracks on the instrument panel and instrument panel reinforcement.
- Check the damage on the connector and wire harness.

HINT:

If the instrument panel or instrument panel reinforcement is deformed or cracked, never repair it. Always replace it with a new one.

RS0OQ-01

DISPOSAL

HINT:

When a scrapping vehicle equipped with an SRS or disposing of a front passenger airbag assembly, always first deploy the airbag in accordance with the procedure described below. If any abnormality occurs with the airbag deployment, contact the SERVICE DEPT. of TOYOTA MOTOR SALES, U.S.A., INC.

When disposing of a front passenger airbag assembly with an airbag deployed in a collision, follow the same procedure given in step 1-(e) in "DISPOSAL".

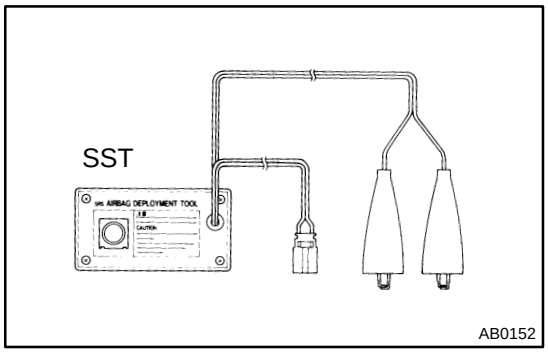

CAUTION:

- **Never dispose of a front passenger airbag assembly which has an undeployed airbag.**
- **The airbag produces a sizeable exploding sound when it deploys, so perform the operation out-of-doors and where it will not create a nuisance to nearby residents.**
- **When deploying the airbag, always use the specified SST (SRS Airbag Deployment Tool). Perform the operation in a place away from electrical noise.**
  SST 09082-00700
- **When deploying an airbag, perform the operation from at least 10 m (33 ft) away from the front passenger airbag assembly.**
- **The front passenger airbag assembly is very hot when the airbag is deployed, so leave it alone for at least 30 minutes after deployment.**
- **Use gloves and safety glasses when handling a front passenger airbag assembly with deployed airbag.**
- **Always wash your hands with water after completing the operation.**
- **Do not apply water, etc. to a front passenger airbag assembly with deployed airbag.**

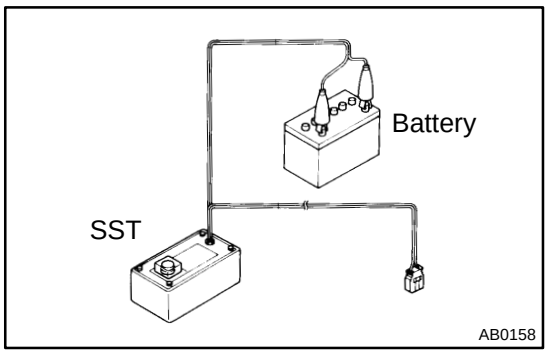

1. AIRBAG DEPLOYMENT WHEN SCRAPPING VEHICLE

HINT:
Have a battery ready as the power source to deploy the airbag.

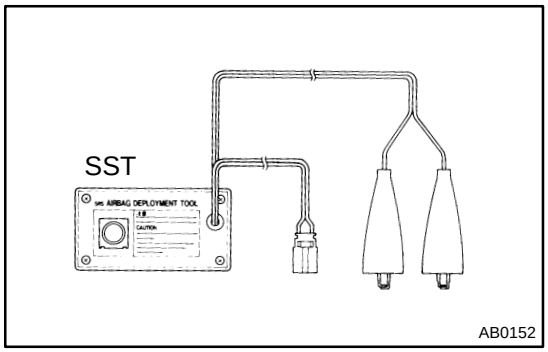

(a) Confirm functioning of the SST.

CAUTION:
When deploying the airbag, always use the specified SST: SRS Airbag Deployment Tool.

SST 09082-00700

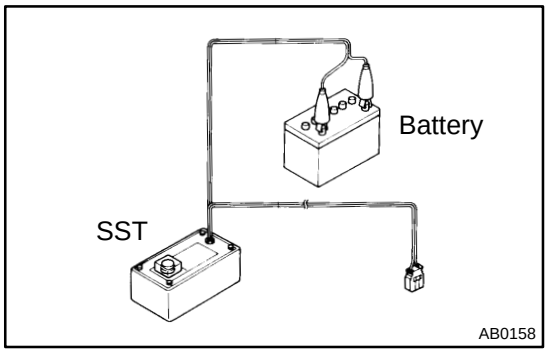

(1) Connect the SST to battery.
Connect the red clip of the SST to the battery positive (+) terminal and the black clip to the battery negative (-) terminal.

HINT:
Do not connect the yellow connector which will be connected with the supplemental restraint system.

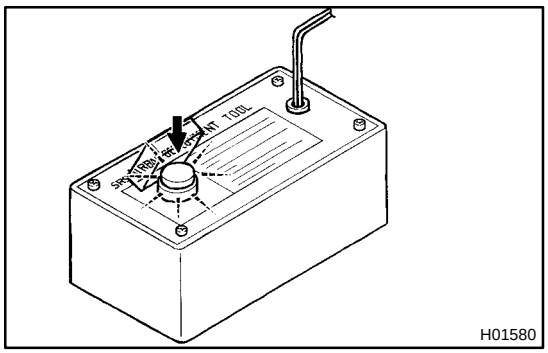

(2) Confirm functioning of the SST.
Press the SST activation switch, and confirm the LED of the SST activation switch lights up.

CAUTION:
If the LED lights up when the activation switch is not being pressed, SST malfunction is probable, so definitely do not use the SST.

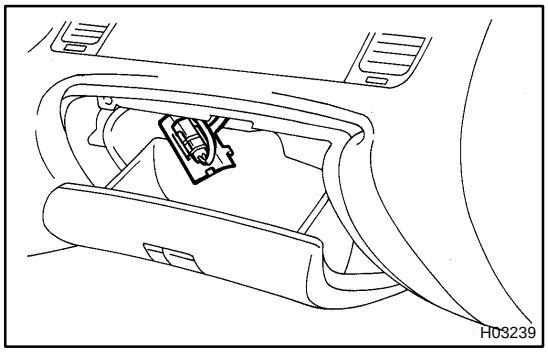

(b) Disconnect the airbag connector.
(1) Remove the glove compartment finish plate inside the instrument panel box.

NOTICE:
When handling the airbag connector, take care not to damage the airbag wire harness.

(2) Pull up the connector.
(3) Disconnect the airbag connector.

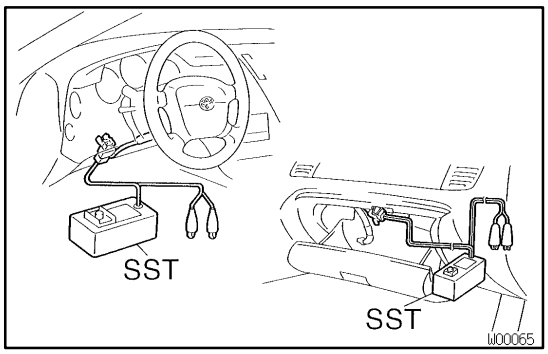

(c) Install the SST.

(1) Connect the connector of SST to the front passenger airbag assembly connector.

SST 09082-00700

NOTICE:

To avoid damaging the SST connector and wire harness, do not lock the secondary lock of the twin lock.

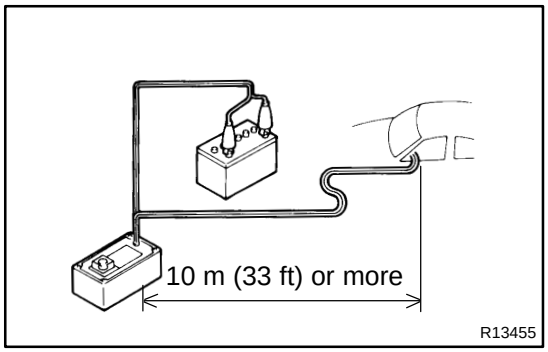

(2) Move the SST to at least 10 m (33 ft) from the front of the vehicle.

(3) Close all the doors and windows of the vehicle.

NOTICE:

Take care not to damage the SST wire harness.

(4) Connect the SST red clip to the battery positive (+) terminal and the black clip to the negative (+) terminal.

(d) Deploy the airbag.

(1) Confirm that no-one is inside the vehicle or within 10 m (33 ft) area around the vehicle.

(2) Press the SST activation switch and deploy the airbag.

HINT:

The airbag deploys simultaneously as the LED of the SST activation switch lights up.

(e) Dispose of the front passenger airbag assembly.

CAUTION:

- **The front passenger airbag assembly is very hot when the airbag is deployed, so leave it alone for at least 30 minutes after deployment.**
- **Use gloves and safety glasses when handling a front passenger airbag assembly with deployed airbag.**
- **Always wash your hands with water after completing the operation.**
- **Do not apply water, etc. to a front passenger airbag assembly with deployed airbag.**

(1) When scrapping a vehicle, deploy the airbag and scrap the vehicle with the front passenger airbag assembly still installed.

(2) When moving a vehicle for scrapping which has a front passenger airbag assembly with deployed airbag, use gloves and safety glasses.

2. DEPLOYMENT WHEN DISPOSING OF FRONT PASSENGER AIRBAG ASSEMBLY ONLY

NOTICE:

- **When disposing of the front passenger airbag assembly only, never use the customers vehicle to deploy the airbag.**
- **Be sure to follow the procedure given below when deploying the airbag.**

HINT:

Have a battery ready as the power source to deploy the airbag.

(a) Remove the front passenger airbag assembly.
(See page RS-21)

CAUTION:

- **When removing the front passenger airbag assembly, work must be started after 90 seconds from the time the ignition switch is turned to the "LOCK" position and the negative (-) terminal cable is disconnected from the battery.**
- **Store the front passenger airbag assembly with the airbag deployment direction facing upward.**

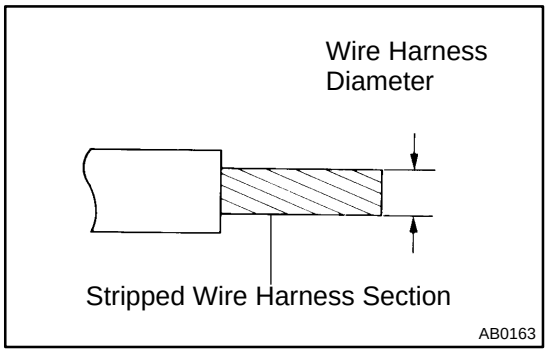

(b) Fix the front passenger airbag assembly to tire.

(1) Using a service-purpose wire harness for the vehicle, tie down the front passenger airbag assembly to the tire.

Wire harness: Stripped wire harness section 1.25 mm^2 or more (0.0019 $in.^2$ or more)

HINT:

To calculate the square of the stripped wire harness section:

Square = 3.14 X $(Diameter)^2$ divided by 4

CAUTION:

If a wire hsrness which is too thin or some other thing is used to tie down the front passenger airbag assembly it may be snapped by the shock when the airbag is deplayed. This is highly dangerous. Always use a wire harness for vehicle use which is at least 1.25 mm^2 (0.0019 in^2).

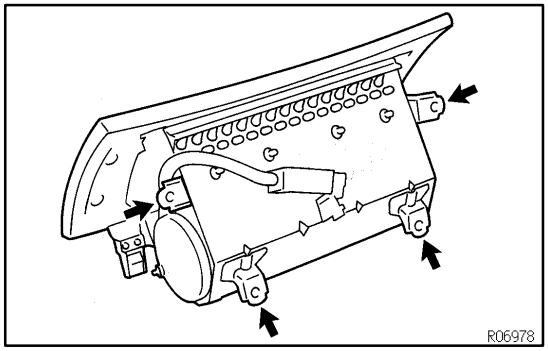

(2) Wrap the wire harness around the tire, passing the wire harness through the installation holes indicated by arrows in the installation.

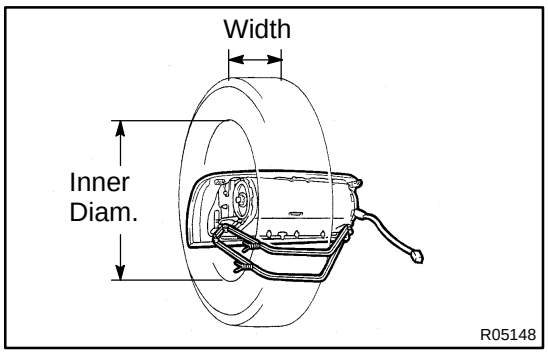

(3) Position the front passenger airbag assembly inside the tire with the airbag deployment direction facing inside.

Tire size: Must exceed the following dimensions-
Width: 185 mm (7.28 in.)
Inner diameter: 360 mm (14.17 in.)

CAUTION:

- **Make sure that the wire harness is tight. It is very dangerous if looseness in the wire harness results in the front passenger airbag assembly coming free due to the shock of the airbag deploying.**
- **Always tie down the front passenger airbag assembly with the airbag door facing inside.**

NOTICE:

The tire will be marked by the airbag deployment, so use a redundant tire.

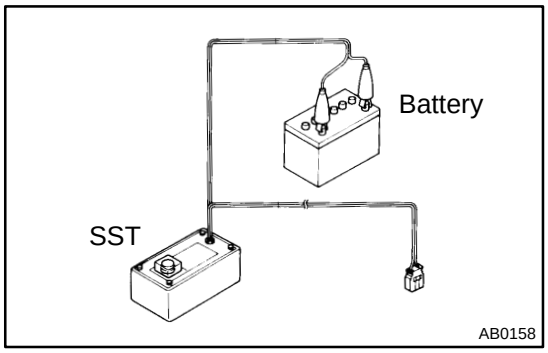

(c) Confirm functioning of the SST.
SST 09082-00700

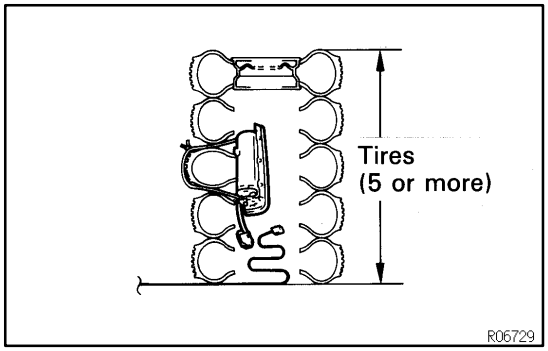

(d) Place tires.
(1) Place at least 2 tires under the tire to which the front passenger airbag assembly is tied.
(2) Place at least 2 tires over the tire to which the front passenger airbag assembly is tied. The top tire should have the wheel installed.
(3) Tie the tires together with 2 wire harnesses.

CAUTION:

Make sure that the wire harnesses are tight. It is very dangerous if loose wire harnesses result in the tires coming free due to the shock of the airbag deploying.

HINT:

Place the SST connector and wire harness inside tires. Provide at least 1 m (3 ft) of slack for the wire harness.

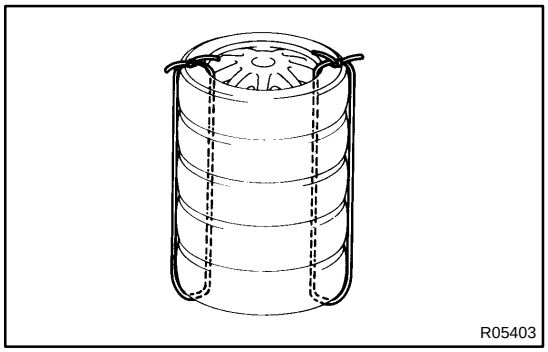

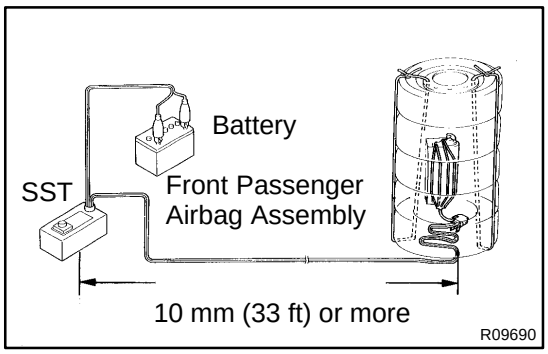

(e) Install the SST.
Connect the connector of SST to the front passenger airbag assembly connector.
SST 09082-00700

NOTICE:

To avoid damaging the SST connector and wire harness, do not lock the secondary lock of the twin lock.

(f) Deploy the airbag.
(1) Connect the SST red clip to the battery positive (+) terminal and the black clip to the battery negative (-) terminal.
(2) Confirm that no-one is within 10 m (33 ft) area around the tire which the front passenger airbag assembly is tied to.
(3) Press the SST activation switch and deploy the airbag.

HINT:
The airbag deploys simultaneously as the LED of the SST activation switch lights up.

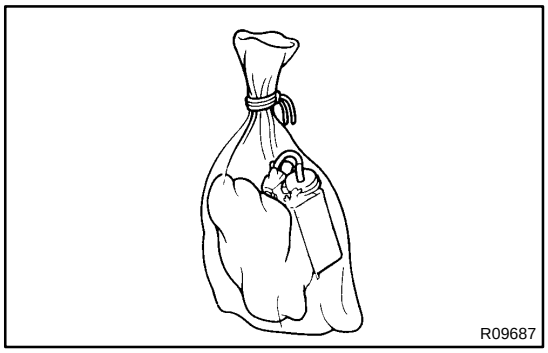

(g) Dispose of the front passenger airbag assembly.

CAUTION:

- **The front passenger airbag assembly is very hot when the airbag is deployed, so leave it alone for at least 30 minutes after deployment.**
- **Use gloves and safety glasses when handling a front passenger airbag assembly with deployed airbag.**
- **Always wash your hands with water after completing the operation.**
- **Do not apply water, etc. to a front passenger airbag assembly with deployed airbag.**

(1) Remove the front passenger airbag assembly from the tire.
(2) Place the front passenger airbag assembly in a vinyl bag, tie the end tightly and dispose of it in the same way as other general parts.

RS06X-01

REPLACEMENT

REPLACEMENT REQUIREMENTS

In the following cases, replace the front passenger airbag assembly, instrument panel or instrument panel reinforcement.

- If the airbag has been deployed.
- If the front passenger airbag assembly has been found to be faulty in troubleshooting.
- If the front passenger airbag assembly, instrument panel or instrument panel reinforcement has been found to be faulty during the check in items. (See page RS-22)
- If the front passenger airbag assembly has been dropped.

CAUTION:

For replacement of the front passenger airbag assembly, see page RS-21 and RS-31 . Be sure to follow the correct procedure.

RS06Y-02

INSTALLATION

NOTICE:

Never use airbag parts from another vehicle. When replacing parts, replace them with new parts.

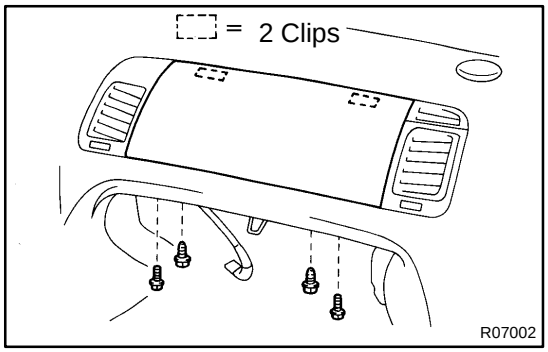

1. INSTALL FRONT PASSENGER AIRBAG ASSEMBLY

(a) Install the front passenger airbag assembly.

(b) Install the 2 bolts to instrument panel reinforcement.
Torque: 21 N·m (210 kgf·cm, 15 ft·lbf)

(c) Install the 2 bolts to instrument panel.
Torque: 8.8 N·m (90 kgf·cm, 78 in.·lbf)

NOTICE:

- **Make sure that no foreign objects are trapped between the airbag bag, and within the module.**
- **Do not damage the strap when installing the module.**

NOTICE:

If the front passenger airbag assembly has been dropped, or there are cracks, dents or other defects in the case or connector, replace the front passenger airbag assembly with a new one.

2. INSTALL THESE PARTS: (See page BO-50)

(a) Heater to register duct No.4

(b) Instrument panel box

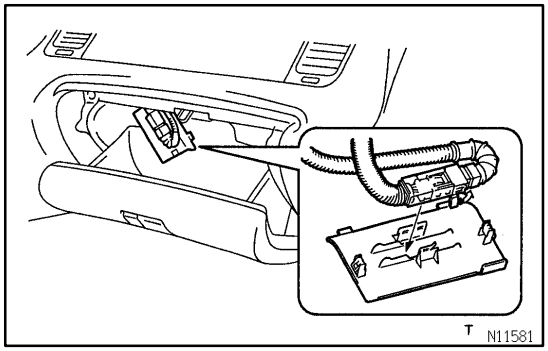

3. CONNECT AIRBAG CONNECTOR

(a) Connect the airbag connector.

(b) Put the connector on the glove compartment door finish plate.

(c) Install the glove compartment door finish plate to the instrument panel box.

AIRBAG SENSOR ASSEMBLY

COMPONENTS

RS06Z-02

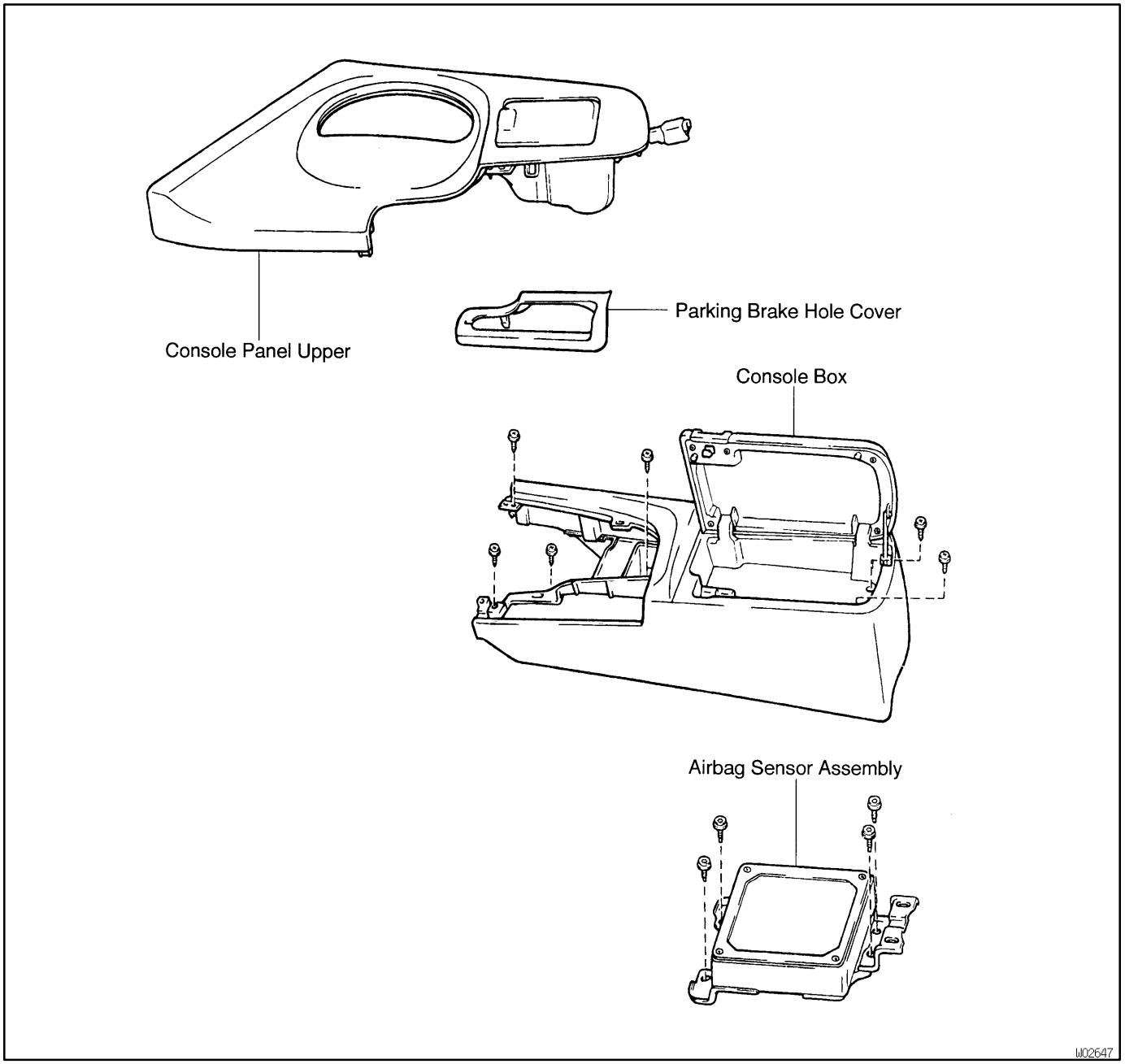

RS070-02

REMOVAL

NOTICE:

Do not open the cover or the case of the ECU and various electrical devices unless absolutely necessary.
(If the IC terminals are touched, the IC may be destroyed by static electricity.)

1. REMOVE THESE PARTS

(a) Console panel upper
(b) Parking brake hole cover
(c) Console box

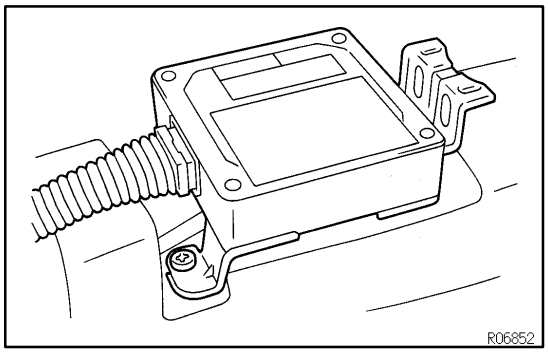

2. REMOVE AIRBAG SENSOR ASSEMBLY

(a) Disconnect the airbag sensor connectors.

NOTICE:

Remove the connectors with the sensor assembly installed.

(b) Using a torx wrench, remove the 4 screws and airbag sensor assembly.

Torx wrench: T40 (Part No.09042-00020 or locally manufactured tool)

RS073-02

INSTALLATION

NOTICE:

- **Never use SRS parts from another vehicle. When replacing parts, replace them with new parts.**
- **Never reuse the airbag sensor assembly involved in a collision when the airbag has deployed.**
- **Never repair a sensor in order to reuse it.**

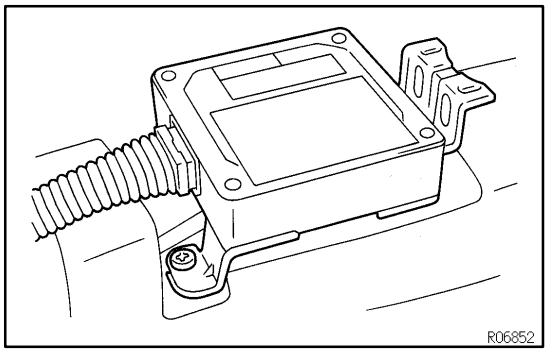

1. INSTALL AIRBAG SENSOR ASSEMBLY

(a) Using a torx wrench, install the airbag sensor assembly with 4 screws.

Torx wrench: T40 (Part No.09042-00020 or locally manufactured tool)

Torque: 21 N·m (210 kgf·cm, 15 ft·lbf)

(b) Connect the airbag sensor connectors.

NOTICE:

- **Installation of the connector is done after the sensor assembly has been installed.**
- **Make sure the sensor assembly is installed with the specified torque.**
- **If the sensor assembly has been dropped, or there are cracks, dents or other defects in the case, bracket or connector, replace the sensor assembly with a new one.**
- **When installing the senor assembly, take care that the SRS wiring does not interfere with other parts and is not pinched between other parts.**
- **After installing , shake the sensor assembly to check that there is no looseness.**

2. INSTALL THESE PARTS:

(a) Console box

(b) Parking brake hole cover

(c) Console panel upper

WIRE HARNESS AND CONNECTOR

RS074-02

LOCATION

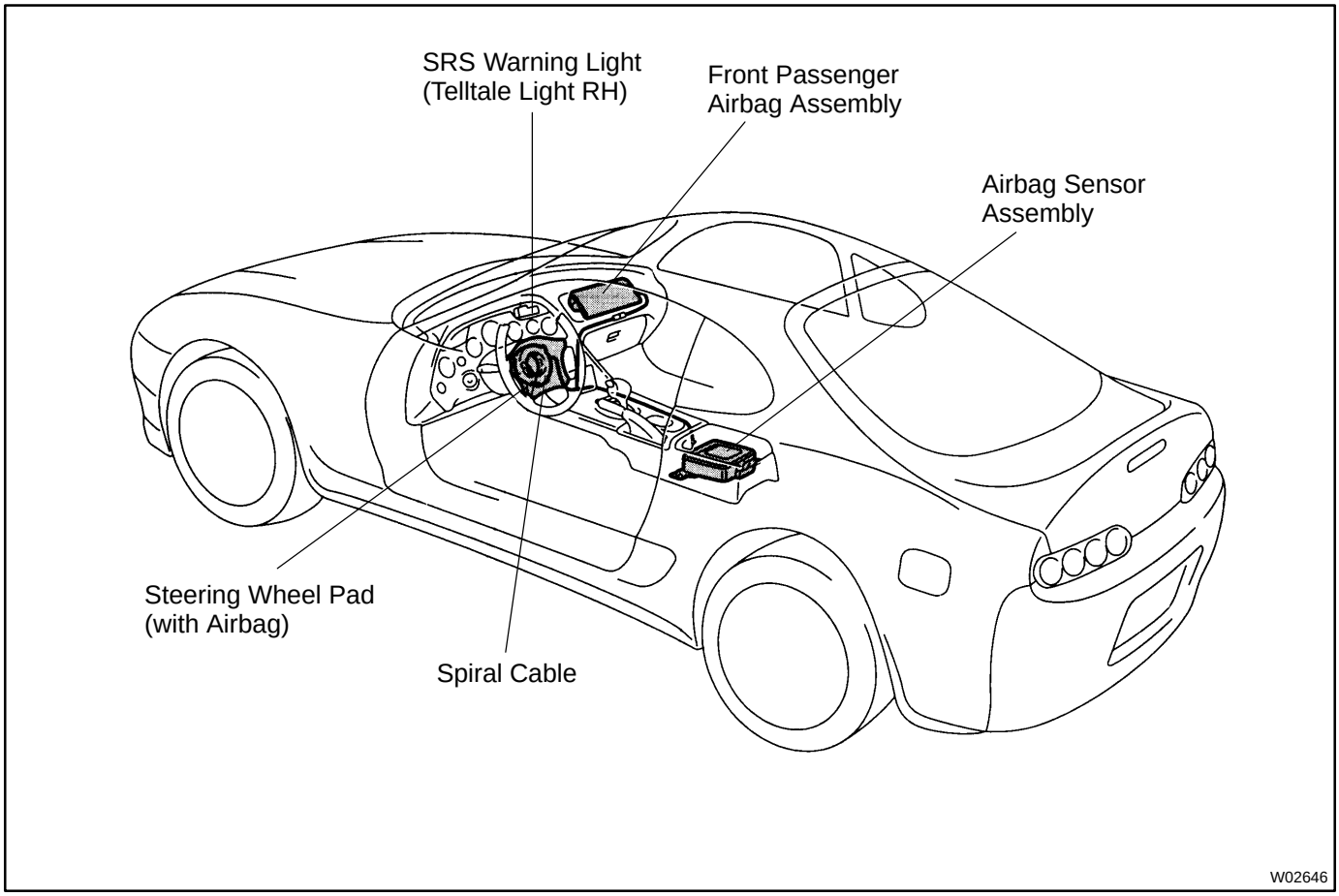

SFI SYSTEM

SF0GG-01

PRECAUTION

1. BEFORE WORKING ON FUEL SYSTEM, DISCONNECT NEGATIVE (-) TERMINAL CABLE FROM BATTERY.

HINT:

Any diagnostic trouble code retained by the computer will be erased when the negative (-) terminal cable is removed from the battery.

Therefore, if necessary, read the diagnosis before removing the terminal.

2. DO NOT SMOKE OR WORK NEAR AN OPEN FLAME WHEN WORKING ON FUEL SYSTEM.

3. KEEP GASOLINE AWAY FROM RUBBER OR LEATHER PARTS.

4. MAINTENANCE PRECAUTIONS

(a) In event of engine misfire, following precautions should be taken.
  (1) Check proper connection of battery terminals, etc.
  (2) After repair work, check that the ignition coil terminals and all other ignition system lines are reconnected securely.
  (3) When cleaning the engine compartment, be especially careful to protect the electrical system from water.

(b) Precautions when handling oxygen sensor.
  (1) Do not allow oxygen sensor to drop or hit against an object.
  (2) Do not allow the sensor to come into contact with water.

5. IF VEHICLE IS EQUIPPED WITH MOBILE RADIO SYSTEM (HAM, CB, ETC)

If the vehicle is equipped with a mobile communication system, refer to the precaution in the IN section.

6. AIR INDUCTION SYSTEM

(a) Separation of the engine oil dipstick, oil filler cap, PCV hose, etc. may cause the engine to run out of tune.

(b) Disconnection, looseness or cracks in the parts of the air induction system between the throttle body and cylinder head will allow air suction and cause the engine to run out of tune.

7. ELECTRONIC CONTROL SYSTEM

(a) Before removing SFI wiring connectors, terminals, etc., first disconnect the power by either turning the ignition switch OFF or disconnecting the negative (-) terminal cable from the battery.

HINT:

Always check the diagnostic trouble code before disconnecting the negative (-) terminal cable from the battery.

(b) When installing the battery, be especially careful not to incorrectly connect the positive (+) and negative (-) cables.
(c) Do not permit parts to receive a severe impact during removal or installation. Handle all SFI parts carefully, especially the ECM.
(d) Do not be careless during troubleshooting as there are numerous transistor circuits and even slight terminal contact can further troubles.
(e) Do not open the ECM cover.
(f) When inspecting during rainy weather, take care to prevent entry of water. Also, when washing the engine compartment, prevent water from getting on the SFI parts and wiring connectors.
(g) Parts should be replaced as an assembly.
(h) Care is required when pulling out and inserting wiring connectors.
  (1) Release the lock and pull out the connector, pulling on the connectors.
  (2) Fully insert the connector and check that it is locked.

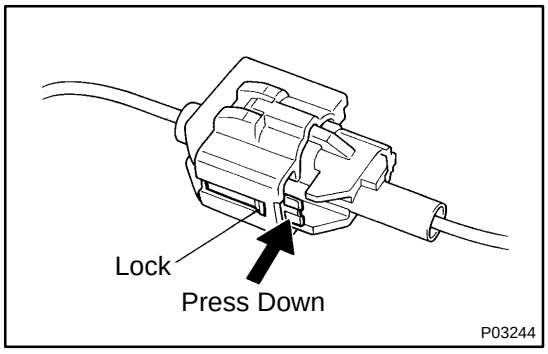

(i) When inspecting a connector with a volt/ohmmeter
  (1) Carefully take out the water-proofing rubber if it is a water-proof type connector.
  (2) Insert the test probe into the connector from the wiring side when checking the continuity, amperage or voltage.
  (3) Do not apply unnecessary force to the terminal.
  (4) After checking, install the water-proofing rubber on the connector securely.

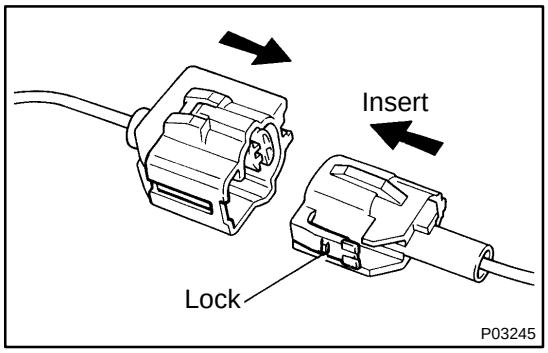

(j) Use SST for inspection or test of the injector or its wiring connector.
SST 09842-30060

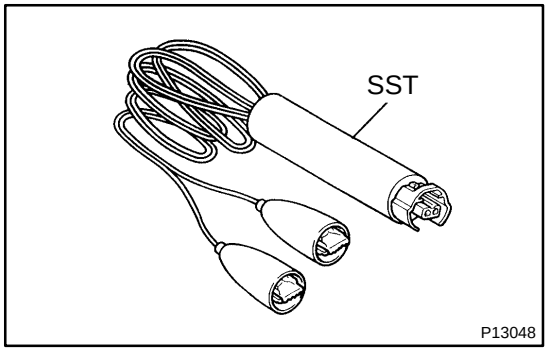

8. FUEL SYSTEM

(a) When disconnecting the high pressure fuel line, a large amount of gasoline will spill out, so observe the following procedures:
  (1) Disconnect the fuel pump connector.
  (2) Start the engine. After the engine has stopped on its own, turn off the ignition switch.

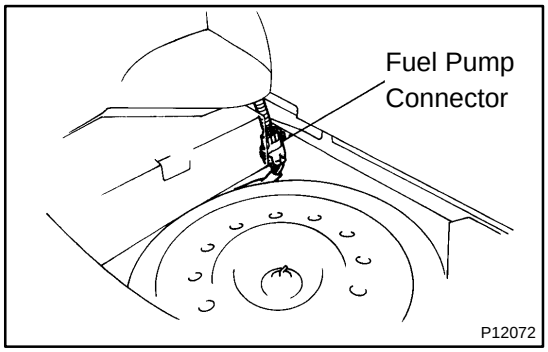

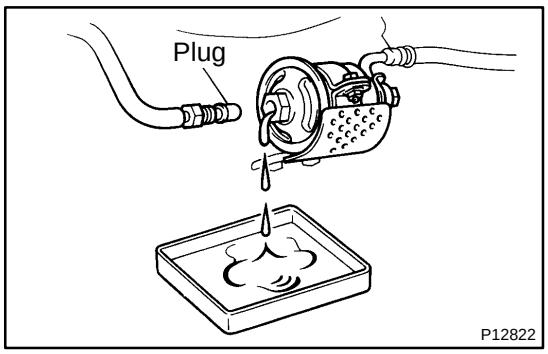

(3) Put a container under the connection.
(4) Slowly loosen the connection.
(5) Disconnect the connection.
(6) Plug the connection with a rubber plug.
(7) Reconnect the fuel pump connector.

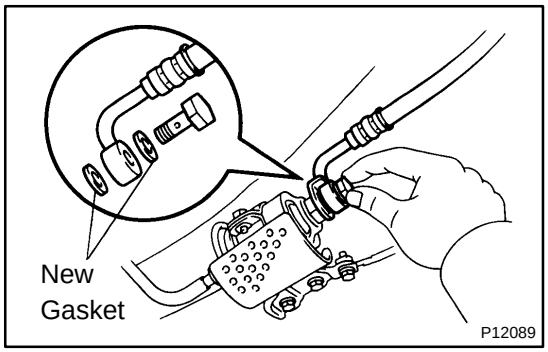

(b) When connecting the flare nut or union bolt on the high pressure pipe union, observe the following procedures:
(1) Union Bolt Type:
Always use a new gasket.
(2) Union Bolt Type:
Tighten the union bolt by hand.
(3) Union Bolt Type:
Tighten the union bolt to the specified torque.
Torque: 29 N·m (300 kgf·cm, 22 ft·lbf)

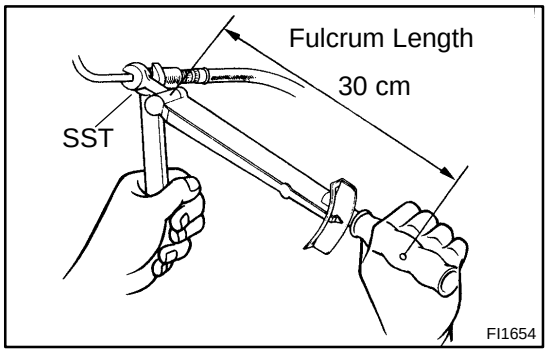

(4) Flare Nut Type:
Apply a light coat of engine oil to the flare nut and tighten the flare nut by hand.
(5) Flare Nut Type:
Using SST, tighten the flare nut to the specified torque.
SST 09631-22020
Torque: 30 N·m (310 kgf·cm, 22 ft·lbf)
HINT:
Use a torque wrench with a fulcrum length of 30 cm (11.81 in.).

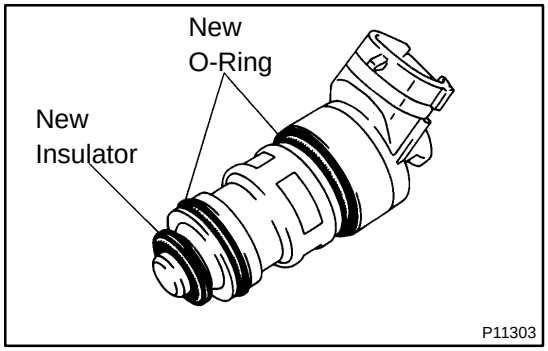

(c) Observe the following precautions when removing and installing the injectors.
(1) Never reuse the O-ring.
(2) When placing a new O-ring on the injector, take care not to damage it in any way.
(3) Coat a new O-ring with spindle oil or gasoline before installing-never use engine, gear or brake oil.

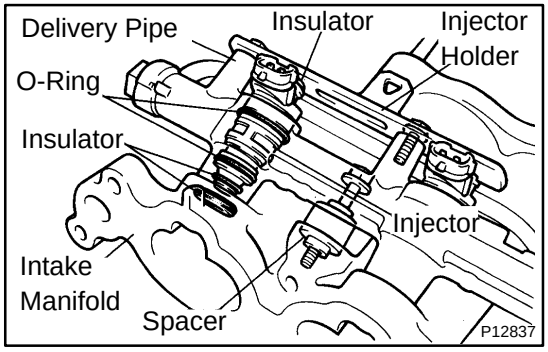

(d) Install the injector to the delivery pipe and intake manifold as shown in the illustration.

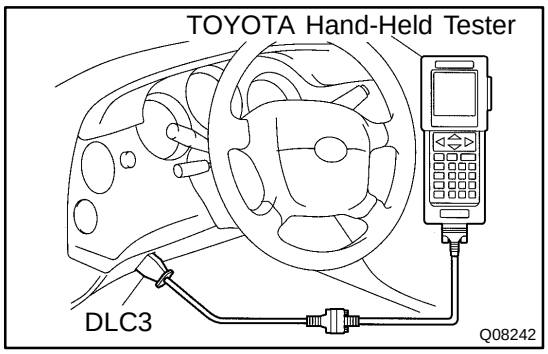

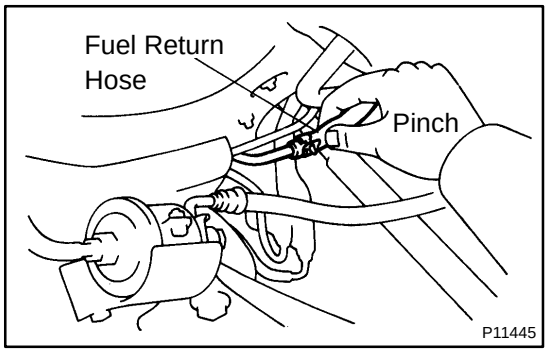

(e) Check that there are no fuel leaks after doing maintenance anywhere on the fuel system.
(1) Connect the TOYOTA hand- held tester to the DLC3.
(2) Turn the ignition switch ON and TOYOTA hand-held tester main switch ON.

NOTICE:
Do not start the engine.

(3) Select the active test mode on the TOYOTA hand-held tester.
(4) Please refer to the TOYOTA hand-held tester operator's manual for further details.
(5) If you have no TOYOTA hand-held tester, connect the positive (+) and negative (-) leads from the battery to the fuel pump connector.
(See page SF-5)
(6) Pinch the fuel return hose.
The pressure in the high pressure line will rise to approx. 392 kPa (4 kgf/cm^2, 57 psi). In this state, check to see that there are no leaks from any part of the fuel system.

NOTICE:
- **Always pinch the hose.**
- **Avoid bending as it may cause the hose to crack.**

(7) Turn the ignition switch to LOCK.
(8) Disconnect the TOYOTA hand-held tester from the DLC3.

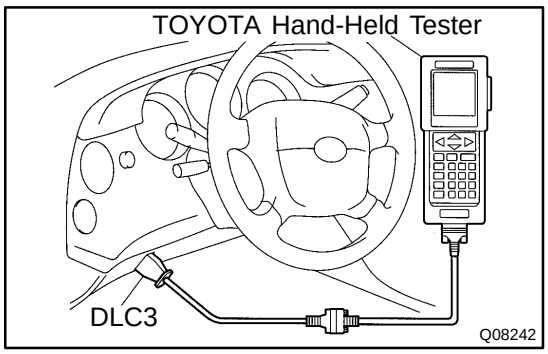

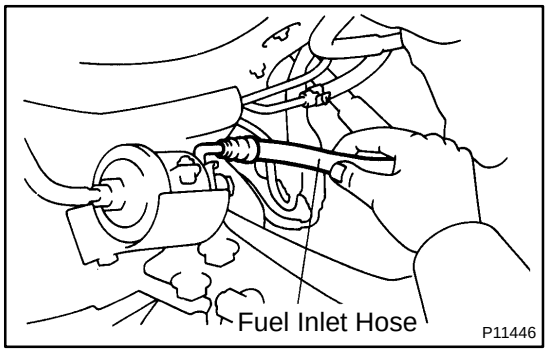

FUEL PUMP

SF0GH-01

ON-VEHICLE INSPECTION

1. CHECK FUEL PUMP OPERATION

(a) Connect the TOYOTA hand-held tester to the DLC3.

(b) Turn the ignition switch ON and TOYOTA hand-held tester main switch ON.

NOTICE:

Do not start the engine.

(c) Select the ACTIVE TEST mode on the TOYOTA hand-held tester.

(d) Please refer to the TOYOTA hand-held tester operator's manual for further details.

(e) If you have no TOYOTA hand-held tester, connect the positive (+) and negative (-) leads from the battery to the fuel pump connector.
(See step 8)

(f) Check that there is pressure in the fuel inlet hose from the fuel filter.

HINT:

If there is fuel pressure, you will hear the sound of fuel flowing.
If there is no pressure, check the following parts:

- Fuses
- EFI No.2 relay
- Fuel pump
- ECM
- Wiring connections

(g) Turn the ignition switch to LOCK.

(h) Disconnect the TOYOTA hand- held tester from the DLC3.

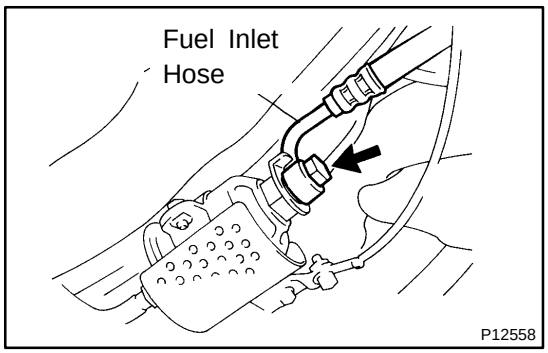

2. CHECK FUEL PRESSURE

(a) Check the battery voltage is above 12 V.

(b) Disconnect the negative (-) terminal cable from the battery.

(c) Remove the union bolt and 2 gaskets, disconnect the fuel inlet hose from the fuel filter.

CAUTION:

- **Put a suitable container or shop towel under the fuel filter.**
- **Slowly loosen the union bolt.**

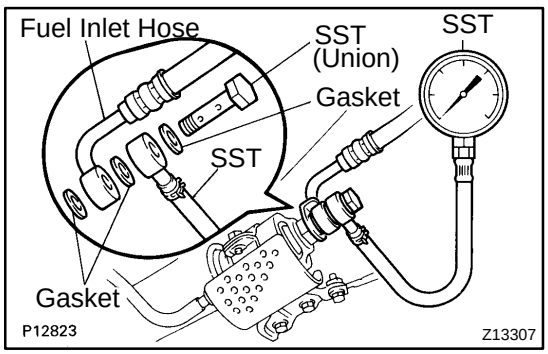

(d) Install the fuel inlet hose and SST (pressure gauge) to the fuel filter with the 3 gaskets and SST (union bolt).
SST 09268-45012
Torque: 29 N·m (300 kgf·cm, 22 ft·lbf)

(e) Wipe off any splattered gasoline.

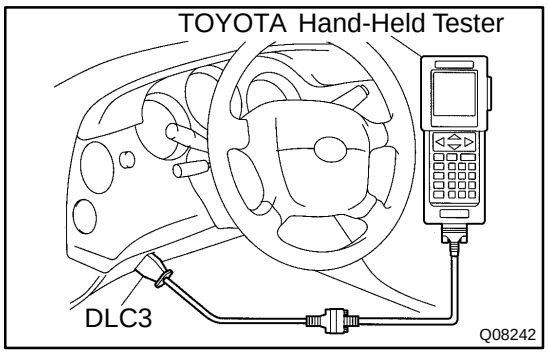

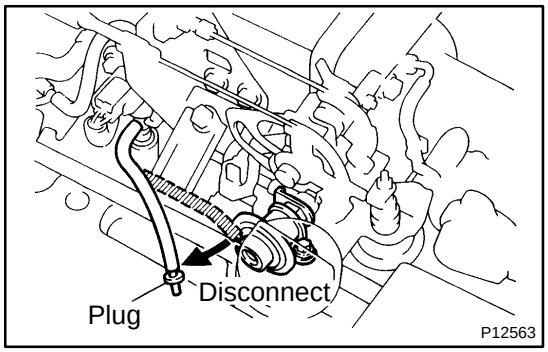

(f) Connect the TOYOTA hand-held tester to the DLC3. (See step 1 in check fuel pump operation (a) to (e).)
(g) Reconnect the negative (-) terminal cable to the battery.
(h) Turn the ignition switch ON.
(i) Measure the fuel pressure.
Fuel pressure:
226 - 275 kPa (2.3 - 2.8 kgf/cm^2, 33 - 40 psi)

If pressure is high, replace the fuel pressure regulator.
If pressure is low, check the following parts:
(1) Fuel hoses and connections
(2) Fuel pump
(3) Fuel filter
(4) Fuel pressure regulator

(j) Remove the TOYOTA hand-held tester from the DLC3.
(k) Start the engine.
(l) Disconnect the vacuum sensing hose from the fuel pressure regulator, and plug the hose end.
(m) Measure the fuel pressure at idle.
Fuel pressure:
226 - 275 kPa (2.3 - 2.8 kgf/cm^2, 33 - 40 psi)

(n) Reconnect the vacuum sensing hose to the fuel pressure regulator.
(o) Measure the fuel pressure at idle.
Fuel pressure:
167 - 216 kPa (1.7 - 2.2 kgf/cm^2, 24 - 31 psi)

If pressure is not as specified, check the vacuum sensing hose and fuel pressure regulator.
(p) Stop the engine.
(q) Check that the fuel pressure remains as specified for 5 minutes after the engine has stopped.
Fuel pressure:
147 kPa (1.5 kgf/cm^2, 21 psi) or more

If pressure is not as specified, check the fuel pump, pressure regulator and/or injectors.
(r) After checking fuel pressure, disconnect the negative (-) terminal cable from the battery and carefully remove the SST to prevent gasoline from splashing.
SST 09268-45012
(s) Reinstall the fuel inlet hose to the fuel filter with 2 new gaskets and the union bolt.
Torque: 29 N·m (300 kgf·cm, 22 ft·lbf)
(t) Reconnect the negative (-) terminal cable to the battery.
(u) Check for fuel leaks.

3. TAKE OUT FLOOR CARPET
4. REMOVE SPARE WHEEL COVER
5. REMOVE SPARE WHEEL
6. REMOVE SERVICE HOLE COVER
7. DISCONNECT FUEL PUMP & SENDER GAUGE CONNECTOR

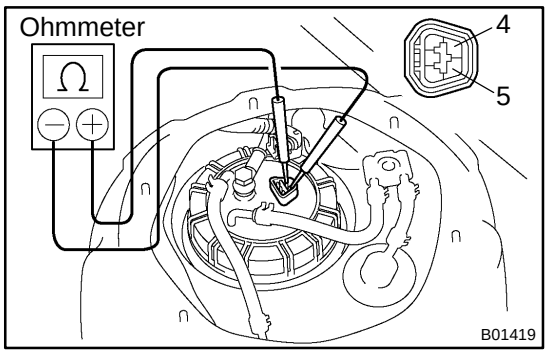

8. INSPECT FUEL PUMP RESISTANCE

Using an ohmmeter, measure the resistance between terminals 4 and 5.

Resistance: 0.1 - 3.0 Ω at 20˚C (68˚F)

If the resistance is not as specified, replace the fuel pump, lead wire or fuel pump bracket.

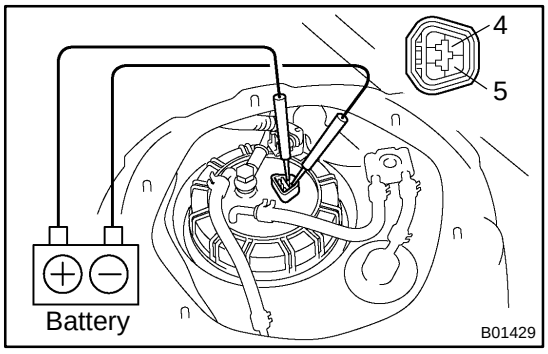

9. INSPECT FUEL PUMP OPERATION

Connect a tester lead from terminal 4 of the connector to the positive (+) terminal of the battery; connect another tester lead from terminal 5 of the connector to the negative (-) terminal of the battery.

NOTICE:

- **These tests must be performed quickly (within 10 seconds) to prevent the coil from burning out.**
- **Keep the fuel pump as far away from the battery as possible.**
- **Always connect or disconnect at the battery.**

If operation is not as specified, replace the fuel pump, lead wire or fuel pump bracket.

10. RECONNECT FUEL PUMP & SENDER GAUGE CONNECTOR

11. INSTALL SERVICE HOLE COVER

12. INSTALL SPARE WHEEL

13. INSTALL SPARE WHEEL COVER

14. INSTALL FLOOR CARPET

SF0GI-01

COMPONENTS

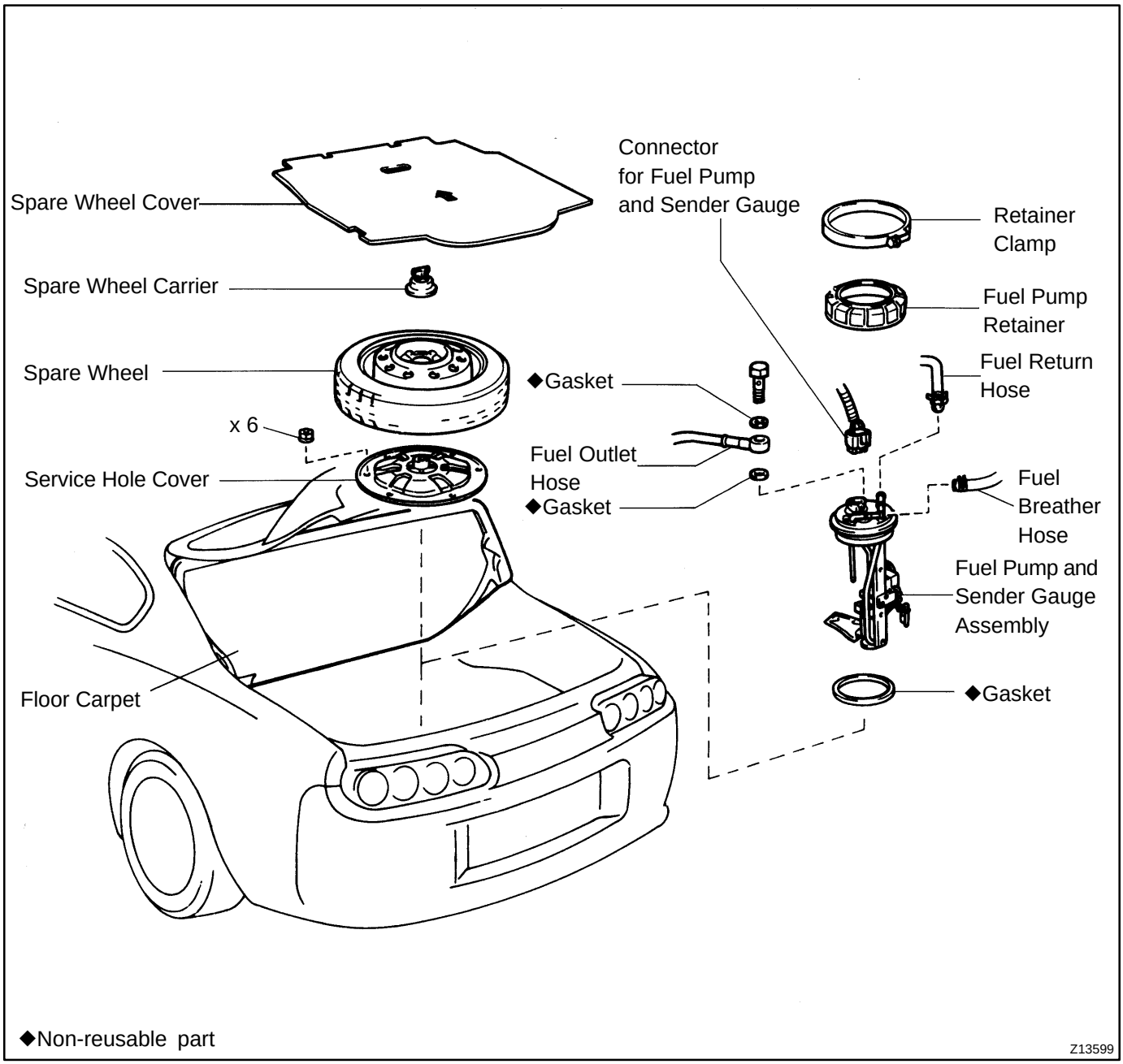

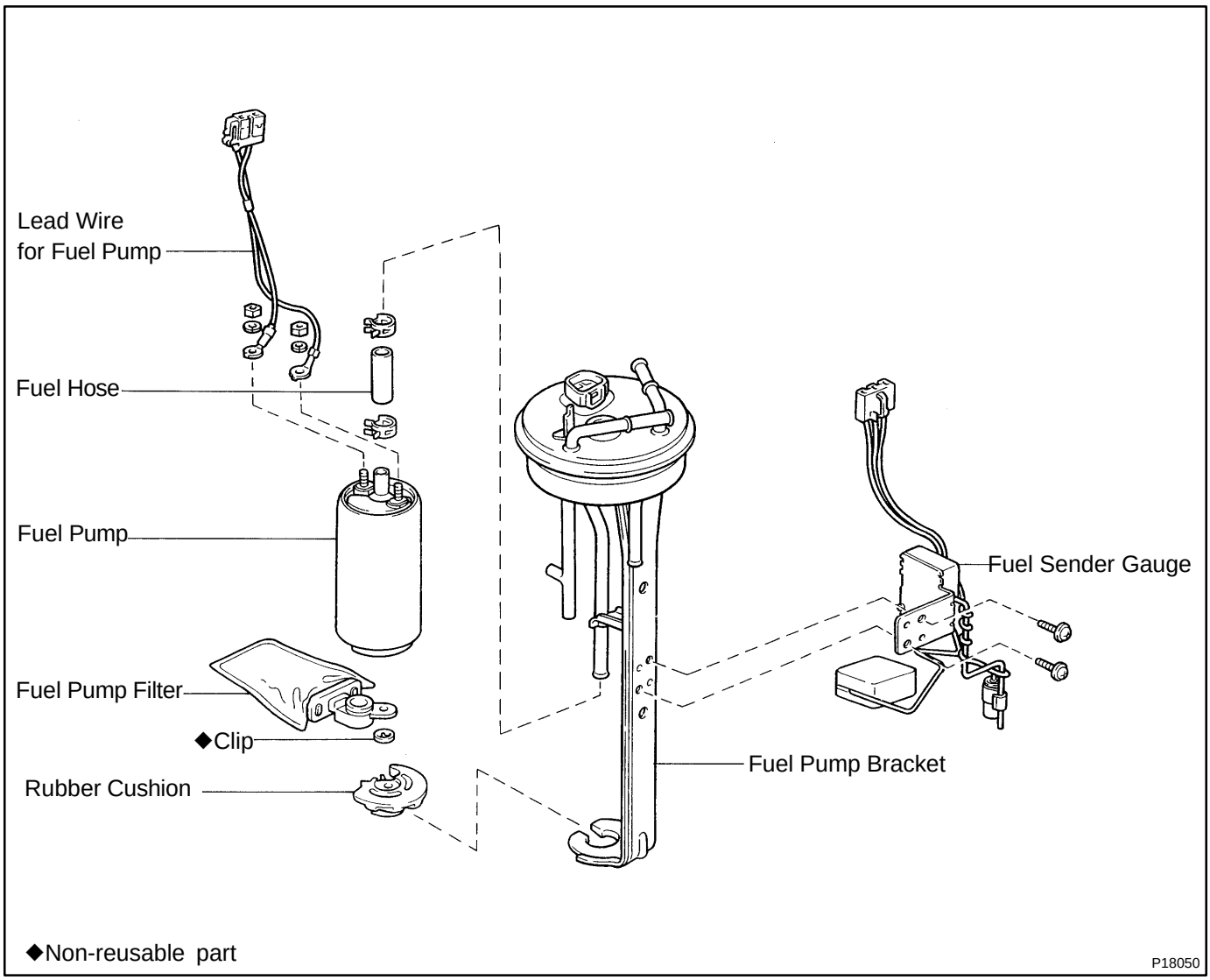
Lead Wire
for Fuel Pump
Fuel Hose
Fuel Pump
Fuel Pump Filter
◆Clip
Rubber Cushion
Fuel Sender Gauge
Fuel Pump Bracket
◆Non-reusable part
P18050

SF19Z-01

REMOVAL

CAUTION:

Do not smoke or work near an open flame when working on the fuel pump.

1. TAKE OUT FLOOR CARPET

2. REMOVE SPARE WHEEL COVER

3. REMOVE SPARE WHEEL

4. REMOVE SERVICE HOLE COVER

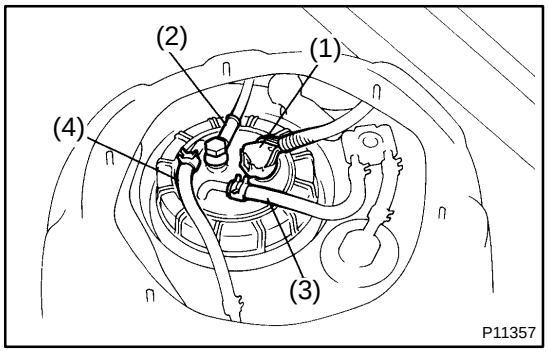

5. REMOVE FUEL PUMP AND SENDER GAUGE ASSEMBLY

(a) Disconnect the connector and hoses from the fuel pump bracket:

(1) Fuel pump connector

(2) Fuel outlet hose

Remove the union bolt and 2 gaskets, and disconnect the outlet hose.

(3) Fuel return hose

(4) Fuel breather hose

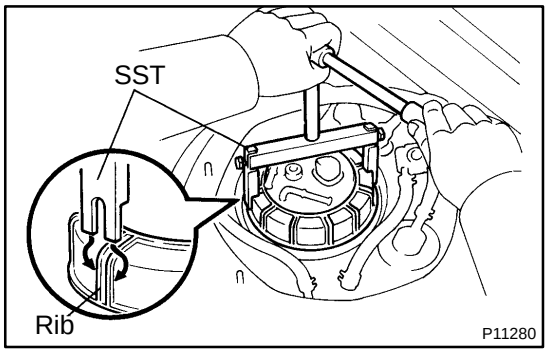

(b) Remove the retainer clamp.

(c) Using SST, loosen the retainer.

SST 09808-14010

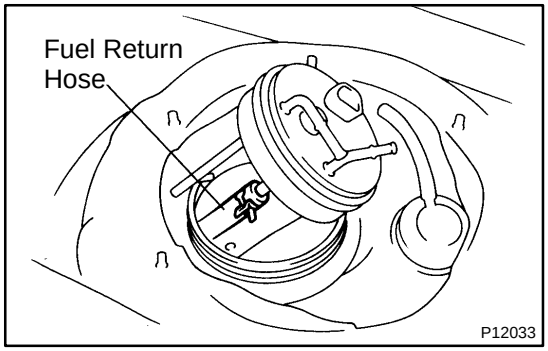

(d) Remove the retainer, and disconnect the fuel pump and sender gauge assembly from the fuel tank.

(e) Disconnect the fuel return hose from the return port of the fuel pump bracket.

(f) Remove the fuel pump, sender gauge assembly and gasket.

SF0GK-01

DISASSEMBLY

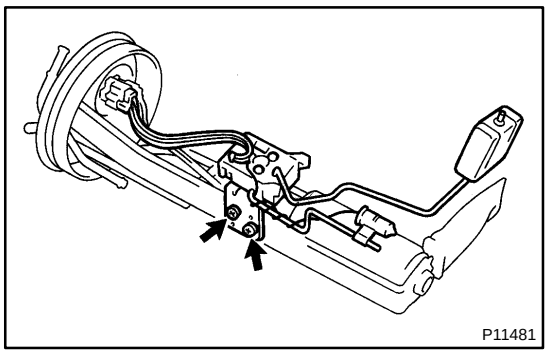

1. REMOVE FUEL SENDER GAUGE FROM FUEL PUMP BRACKET

(a) Disconnect the connector from the fuel pump bracket.
(b) Remove the 2 screws and sender gauge.

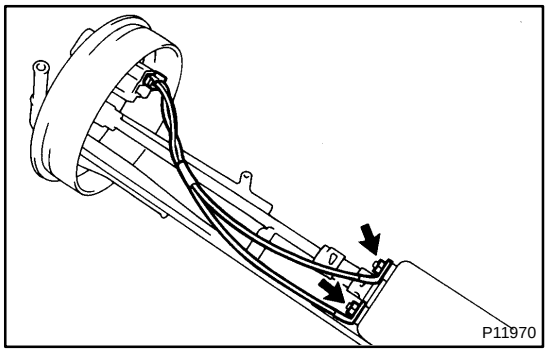

2. REMOVE FUEL PUMP FROM PUMP BRACKET

(a) Remove the lead wire.

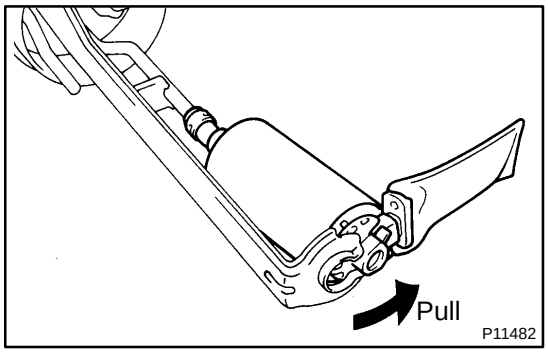

(b) Pull out the lower side of the fuel pump from the pump bracket.
(c) Remove the rubber cushion from the fuel pump.
(d) Disconnect the fuel hose from the fuel pump, and remove the fuel pump.

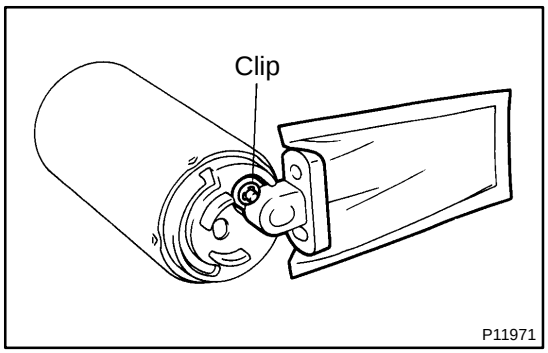

3. REMOVE FUEL PUMP FILTER FROM FUEL PUMP

(a) Using a small screwdriver, remove the clip.

HINT:

At the time of installation,please refer to the following items.

Use a new clip.

(b) Pull out the pump filter.

SF0GM-01

INSTALLATION

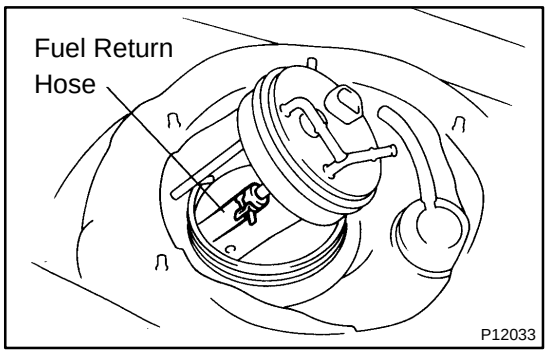

1. INSTALL FUEL PUMP AND SENDER GAUGE ASSEMBLY

(a) Install a new gasket to the fuel tank.

(b) Insert fuel pump and sender gauge assembly into the fuel tank.

(c) Connect the fuel return hose to the return port of the fuel pump bracket.

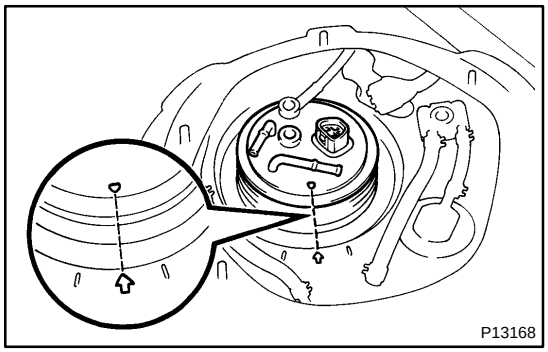

(d) Align the arrow marks of the fuel pump bracket and fuel tank.

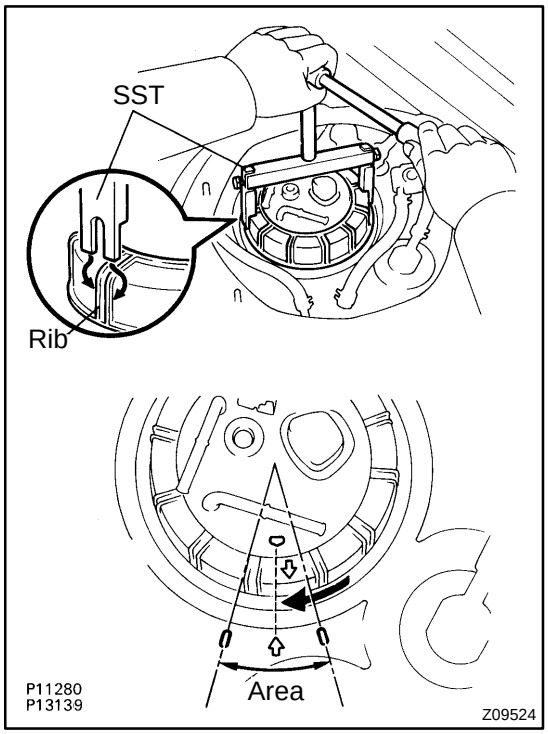

(e) Temporarily install the retainer.

(f) Using SST, tighten the retainer until the arrow mark on the retainer is within the lines on the fuel tank.
SST 09808-14010

(g) Check that the arrow marks of the fuel pump bracket and fuel tank are aligned.

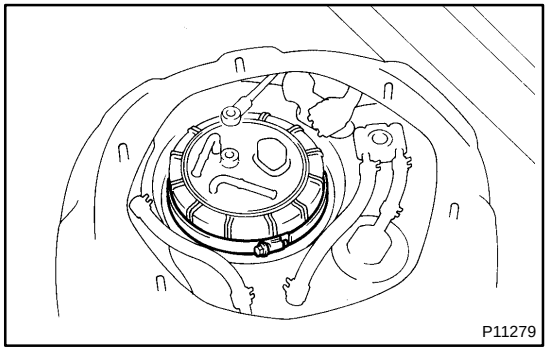

(h) Install the retainer clamp.

(i) Connect the connector and hoses to the fuel pump bracket:

- Fuel pump connector
- Fuel outlet hose

Connect the outlet hose with 2 new gaskets and the union bolt.

Torque: 29 N·m (300 kgf·cm, 22 ft·lbf)

- Fuel return hose
- Fuel breather hose

2. **INSTALL SERVICE HOLE COVER**
3. **INSTALL SPARE WHEEL**
4. **INSTALL SPARE WHEEL COVER**
5. **INSTALL FLOOR CARPET**
6. **CHECK FOR FUEL LEAKS**

FUEL PRESSURE REGULATOR

COMPONENTS

SF0GN-01

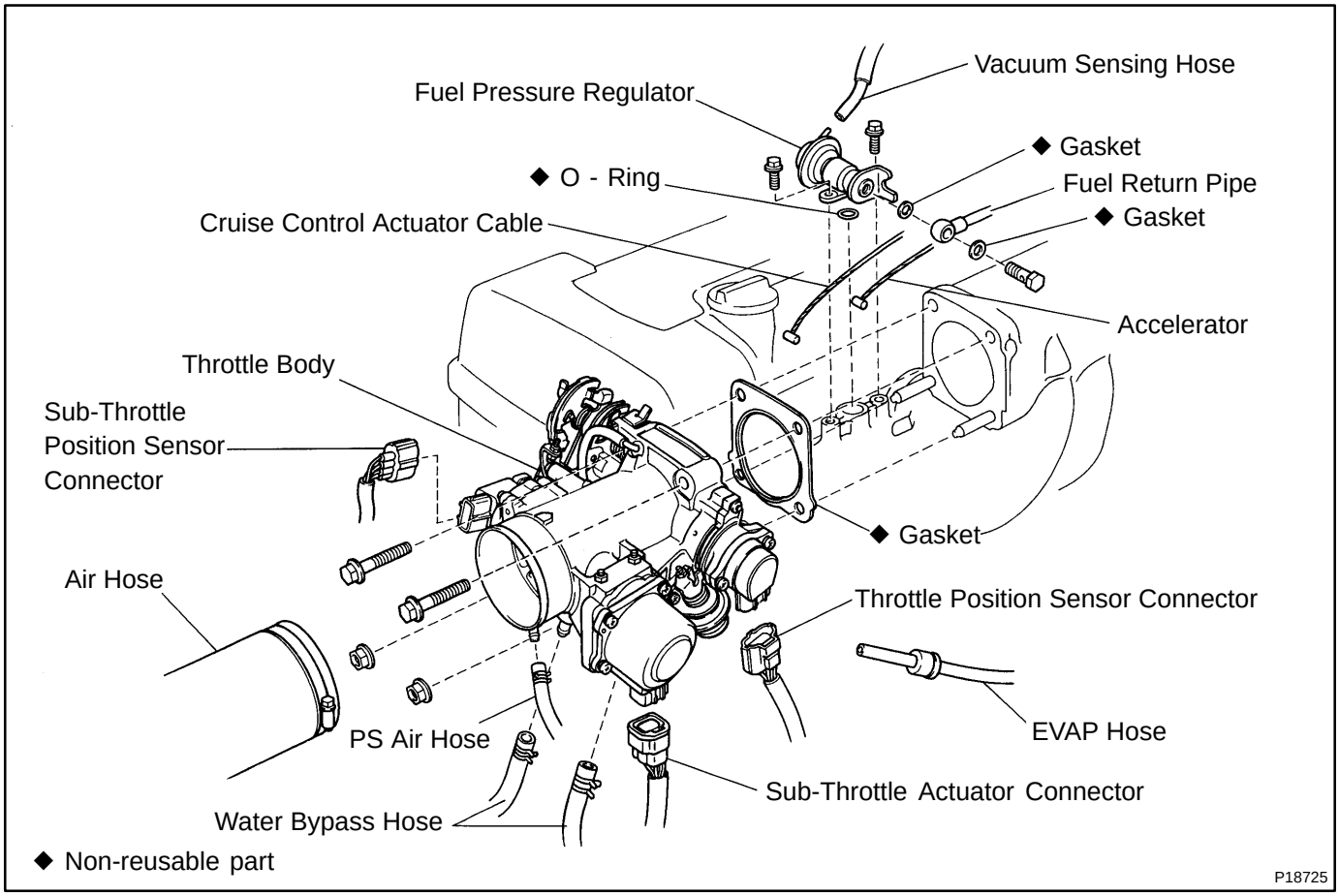

SF0GO-01

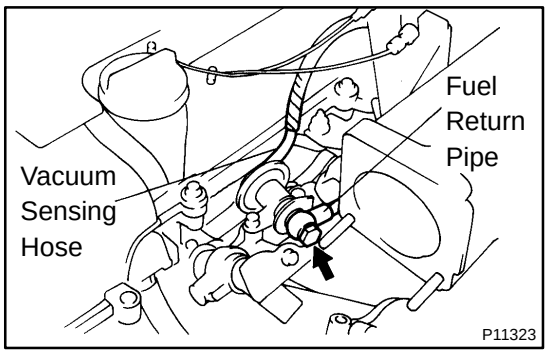

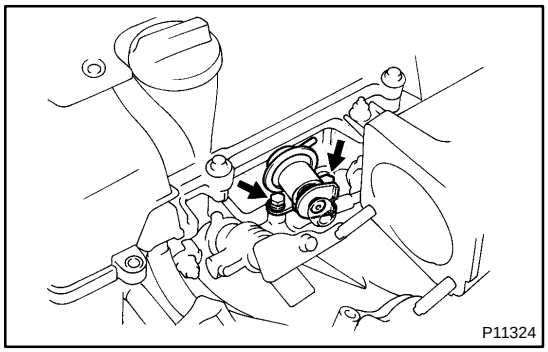

REMOVAL

1. REMOVE THROTTLE BODY
(See page SF-43)

2. DISCONNECT VACUUM SENSING HOSE FROM FUEL PRESSURE REGULATOR

3. DISCONNECT FUEL RETURN PIPE FROM FUEL PRESSURE REGULATOR

Remove the union bolt and 2 gaskets, and disconnect the return pipe from the pressure regulator.

CAUTION:

- **Put a shop rag under the pressure regulator.**
- **Slowly loosen the union bolt.**

4. REMOVE FUEL PRESSURE REGULATOR

(a) Remove the 2 bolts, and pull out the pressure regulator.

(b) Remove the O-ring from the pressure regulator.

SF0GP-01

INSTALLATION

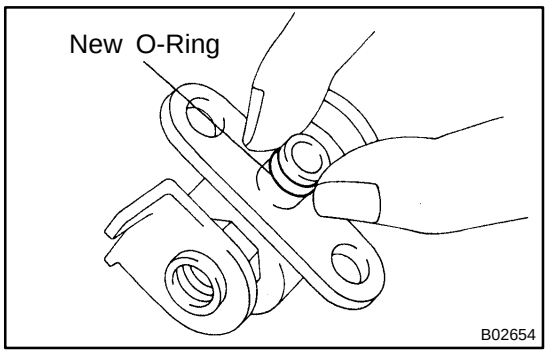

1. INSTALL FUEL PRESSURE REGULATOR

(a) Apply a light coat of gasoline to a new O-ring, and install it to the pressure regulator.

(b) Attach the pressure regulator to the delivery pipe.

(c) Check that the pressure regulator rotates smoothly.

NOTICE:

If it does not rotate smoothly, the O-ring may be pinched, so remove the pressure regulator and do steps (b) and (c) above again.

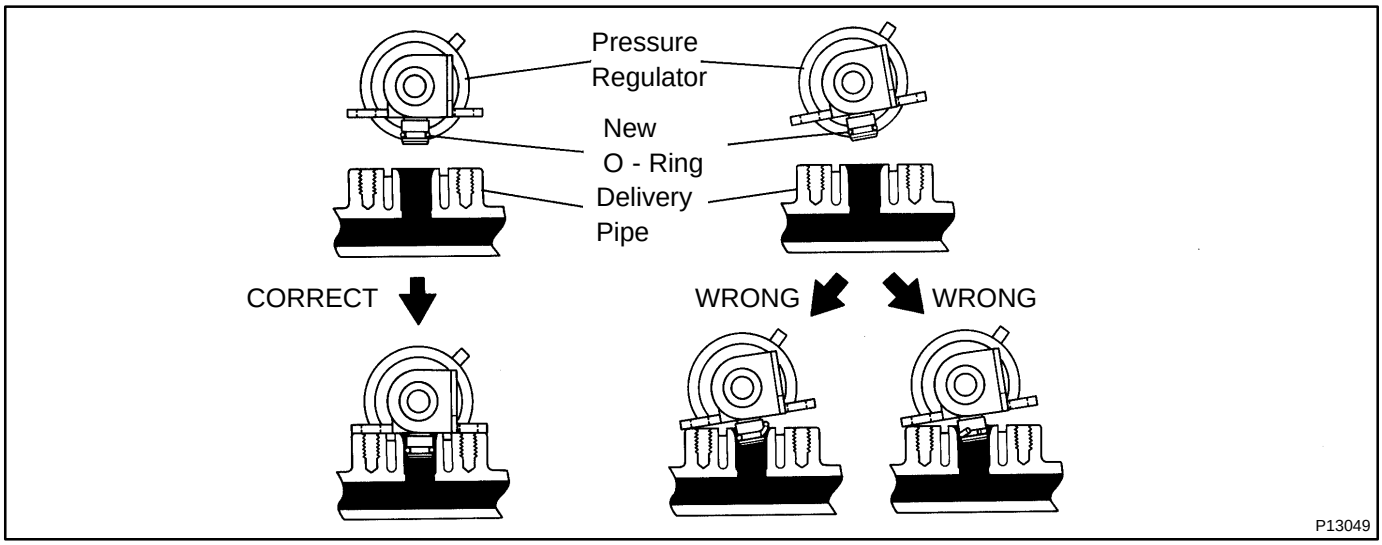

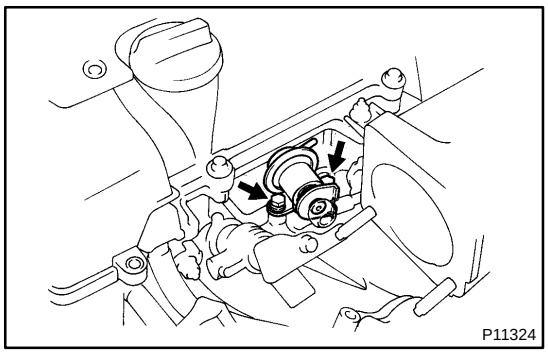

(d) Install the pressure regulator with the 2 bolts.
Torque: 9.0 N·m (90 kgf·cm, 80 in.·lbf)

2. CONNECT FUEL RETURN PIPE TO FUEL PRESSURE REGULATOR

Install the return pipe with 2 new gaskets and the union bolt.
Torque: 28 N·m (280 kgf·cm, 21 ft·lbf)

3. CONNECT VACUUM SENSING HOSE TO FUEL PRESSURE REGULATOR

4. INSTALL THROTTLE BODY
(See page SF-48)

5. CHECK FOR FUEL LEAKS
(See page SF-1)

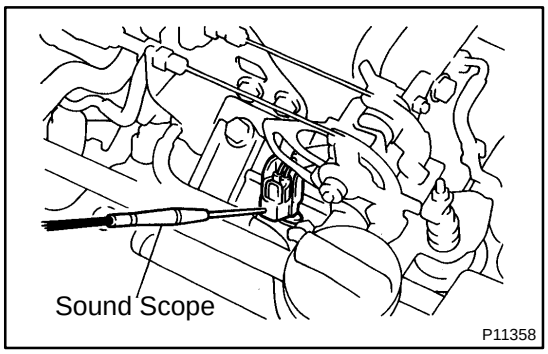

INJECTOR

SF0GQ-01

ON-VEHICLE INSPECTION

1. INSPECT INJECTOR OPERATION

Check operation sound from each injector.

(1) With the engine running or cranking, use a sound scope to check that there is normal operating noise in proportion to engine speed.

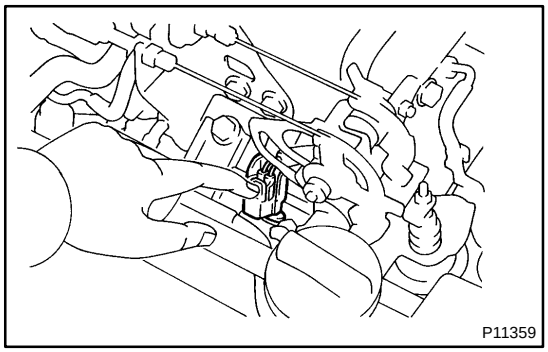

(2) If you have no sound scope, you can check the injector transmission operation with your finger.

If no sound is heard or unusual vibration is felt, check the wiring connector, injector or injection signal from the ECM.

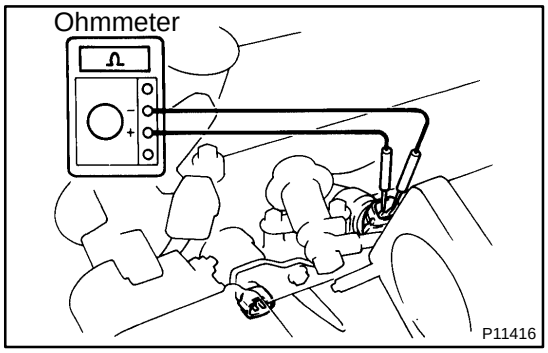

2. INSPECT INJECTOR RESISTANCE

(a) Disconnect the throttle body without disconnecting the water bypass hoses from the air intake chamber.
(See page SF-42)

(b) Disconnect the 6 injector connectors.

(c) Using an ohmmeter, measure the resistance between the injector terminals.

Resistance: Approx. 1.95 Ω at 20˚C (68˚F)

If the resistance is not as specified, replace the injector.

(d) Reconnect the 6 injector connectors.

(e) Reinstall the throttle body to the air intake chamber.
(See page SF-48)

SF0GR-01

COMPONENTS

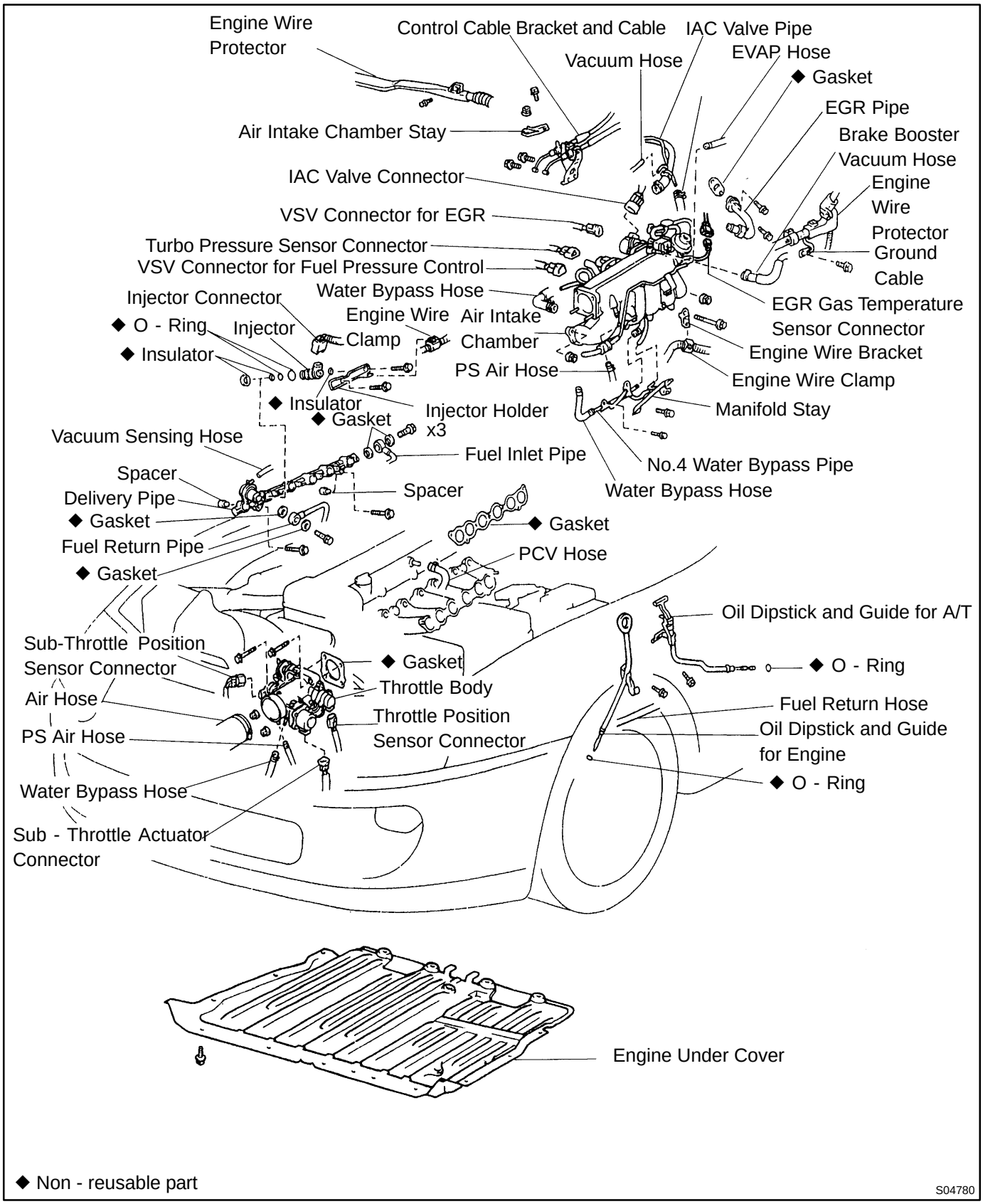

SF0GS-02

REMOVAL

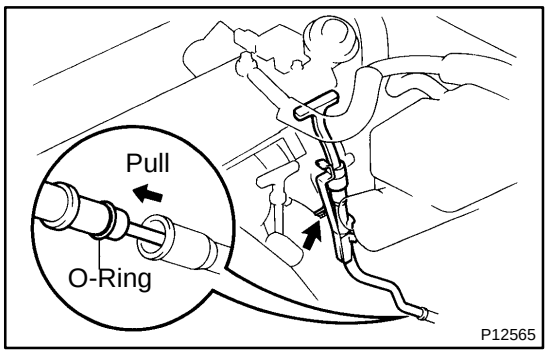

1. REMOVE ENGINE UNDER COVER

2. REMOVE THROTTLE BODY
(See page SF-43)

3. REMOVE OIL DIPSTICK AND GUIDE FOR A/T

(a) Remove the bolt.

(b) Pull out the dipstick guide together with the dipstick.

HINT:
At the time of installation, please refer to the following items.
Apply clean transmission oil to the O-ring, and push in the dipstick guide.

(c) Remove the O-ring from the dipstick guide.

HINT:
At the time of installation, please refer to the following items.
Use a new O-ring.

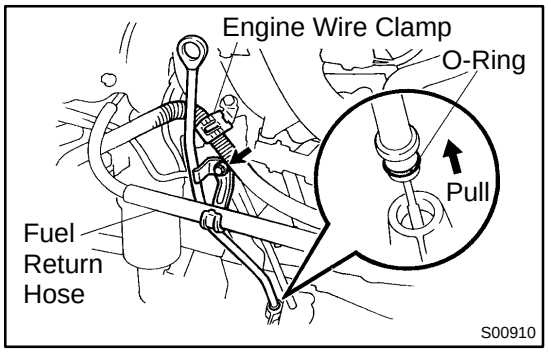

4. REMOVE OIL DIPSTICK AND GUIDE FOR ENGINE

(a) Disconnect the fuel return hose from the clamp of the dipstick guide.

(b) Remove the bolt.

(c) Pull out the dipstick guide together with the dipstick.

HINT:
At the time of installation, please refer to the following items.
Apply clean engine oil to the O-ring, and push in the dipstick guide.

(d) Remove the O-ring from the dipstick guide.

HINT:
At the time of installation, please refer to the following items.
Use a new O-ring.

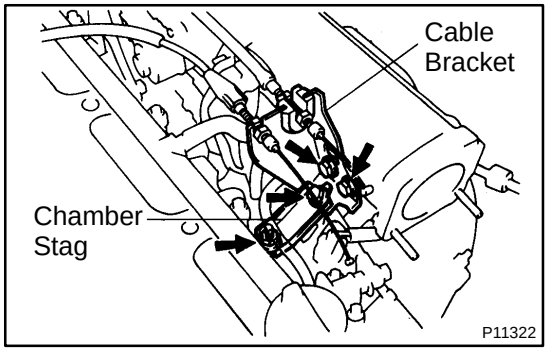

5. REMOVE AIR INTAKE CHAMBER STAY

Remove the bolt, nut and chamber stay.

Torque: 19 N·m (195 kgf·cm, 14 ft·lbf)

6. DISCONNECT CONTROL CABLE BRACKET FROM AIR INTAKE CHAMBER

Remove the 2 bolts, and disconnect the cable bracket from the air intake chamber.

Torque: 19 N·m (195 kgf·cm, 14 ft·lbf)

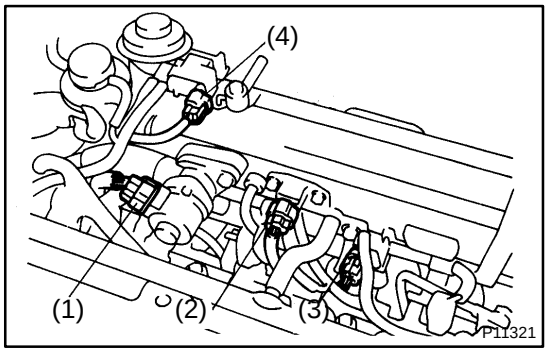

7. DISCONNECT CONNECTORS AND HOSES

(a) Disconnect these connectors:
- (1) IAC valve connector
- (2) Turbo pressure sensor connector
- (3) VSV connector for fuel pressure control
- (4) VSV connector for EGR

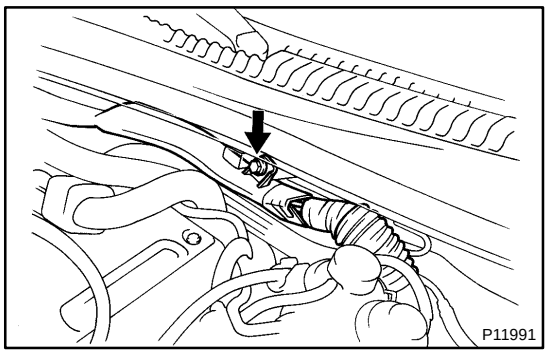

(b) Remove the bolt, and disconnect the engine wire protector from the body.

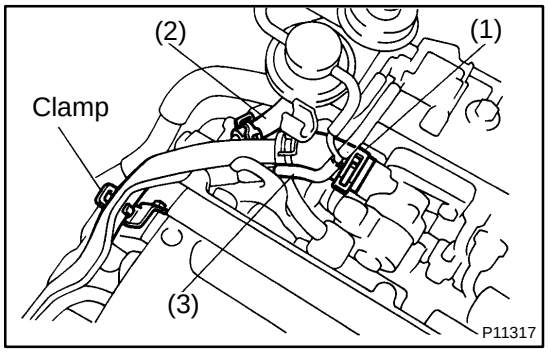

(c) Disconnect these hoses:
(1) Air hose from IAC valve
Disconnect the IAC valve pipe from the clamp on the cylinder head cover, and disconnect the air hose from the IAC valve.
(2) Air hose (from air intake chamber) from vacuum pipe on IAC valve pipe
(3) Air hose for EGR from valve pipe

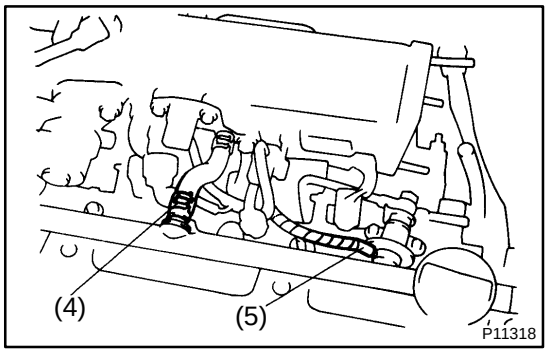

(4) PCV hose from PCV valve
(5) Vacuum sensing hose from fuel pressure regulator

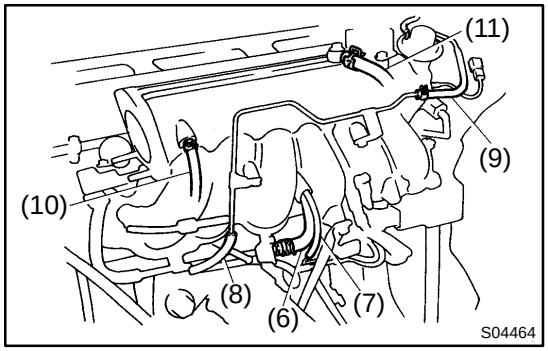

(6) Water bypass hose (from IAC valve) from No.4 water bypass pipe
(7) EVAP hose (from air intake chamber) from vacuum pipe on manifold stay
(8) EVAP hose (from vacuum pipe on No.4 water bypass pipe) from No.2 vacuum pipe
(9) EVAP hose (from charcoal canister) from No.2 vacuum pipe
(10) PS air hose from air intake chamber
(11) Brake booster vacuum hose from union on air intake chamber

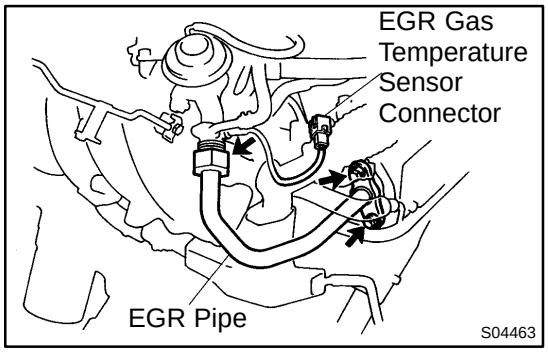

8. DISCONNECT EGR GAS TEMPERATURE SENSOR CONNECTOR

(a) Disconnect the connector from the No.2 vacuum pipe.
(b) Disconnect the sensor connector from the wiring connector.

9. REMOVE EGR PIPE

(a) Remove the union bolt holding the EGR pipe to the EGR valve.
Torque: 64 N·m (650 kgf·cm, 47 ft·lbf)

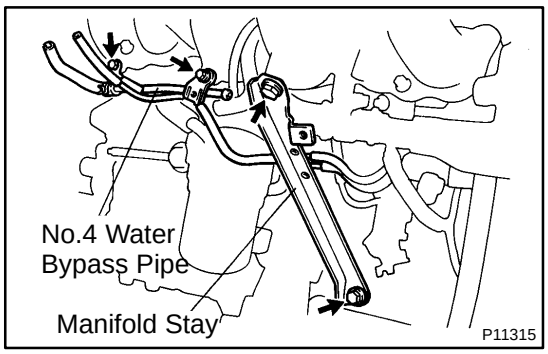

(b) Remove the 2 bolts, EGR pipe and gasket.

HINT:

At the time of installation, please refer to the following items.

Use a new gasket.

Torque: 27 N·m (280 kgf·cm, 20 ft·lbf)

10. REMOVE NO.4 WATER BYPASS PIPE

Remove the 2 bolts and water bypass pipe.

11. REMOVE MANIFOLD STAY

Remove the 2 bolts and manifold stay.

Torque: 39 N·m (400 kgf·cm, 29 ft·lbf)

12. REMOVE AIR INTAKE CHAMBER ASSEMBLY

(a) Remove the bolt, and disconnect the ground cable from the intake manifold.

(b) Remove the 2 bolts holding the engine wire protector to the intake manifold.

(c) Disconnect the 2 clamps of the engine wire protector from the brackets.

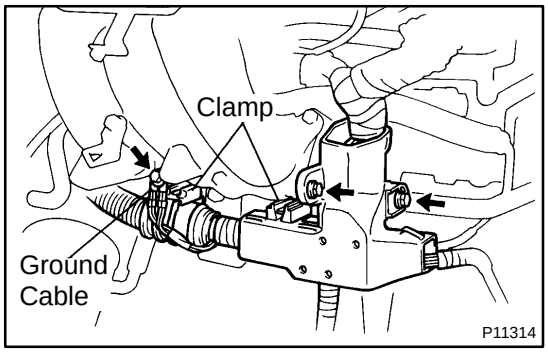

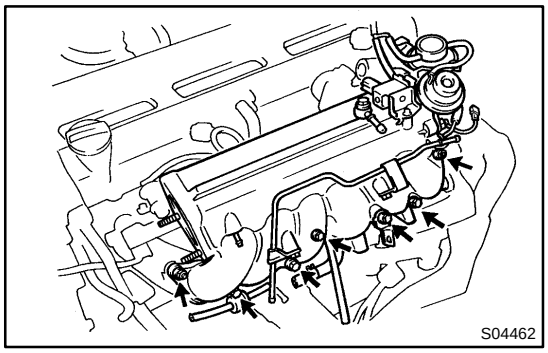

(d) Remove the 5 bolts, 2 nuts and engine wire bracket, and disconnect the air intake chamber assembly from the intake manifold.

HINT:

At the time of installation, please refer to the following items.

Uniformly tighten the bolts and nuts in several passes.

Torque: 27 N·m (280 kgf·cm, 20 ft·lbf)

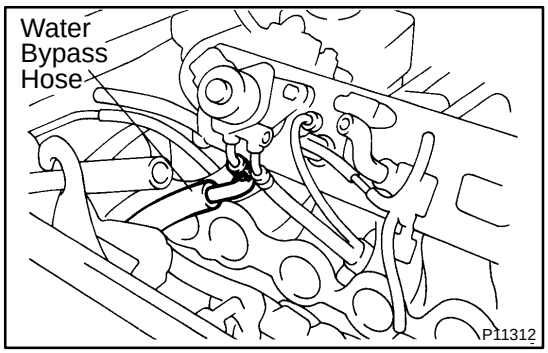

(e) Disconnect the water bypass hose from the IAC valve.

(f) Remove the gasket.

HINT:

At the time of installation, please refer to the following items.

Use a new gasket.

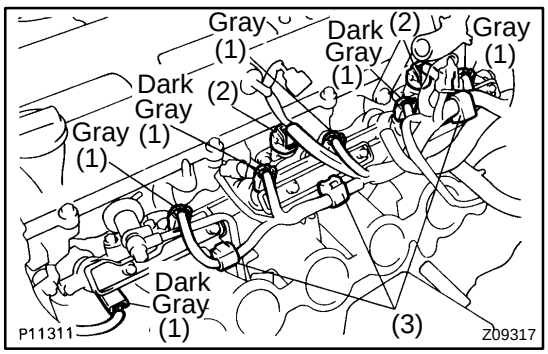

13. DISCONNECT WIRE CLAMPS AND CONNECTORS

Disconnect these connectors and clamps:

(1) 6 injectors connectors

HINT:

At the time of installation, please refer to the following items.

The No.1, No.3 and No.5 injector connectors are dark gray, and the No.2, No.4 and No.6 injector connectors are gray.

(2) 2 camshaft position sensor connectors

(3) 3 engine wire clamps from injector holders

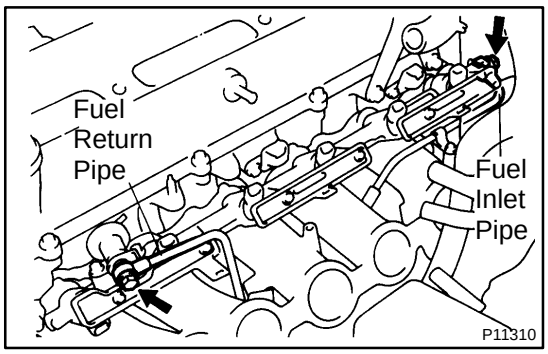

14. DISCONNECT FUEL INLET PIPE FROM DELIVERY PIPE

Remove the union bolt and 2 gaskets, and disconnect the inlet pipe from the delivery pipe.

HINT:

At the time of installation, please refer to the following items.

Use 2 new gaskets.

Torque: 41 N·m (420 kgf·cm, 30 ft·lbf)

CAUTION:

- **Put a shop towel under the delivery pipe.**
- **Slowly loosen the union bolt.**

15. DISCONNECT FUEL RETURN PIPE FROM FUEL PRESSURE REGULATOR

(See page SF-16)

16. REMOVE DELIVERY PIPE AND INJECTORS

(a) Remove the 6 bolts and 3 injector holders.

Torque: 7.8 N·m (80 kgf·cm, 69 in.·lbf)

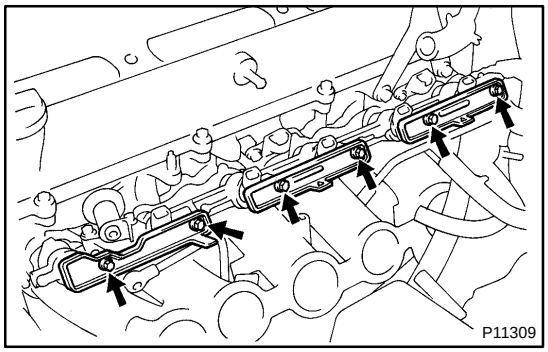

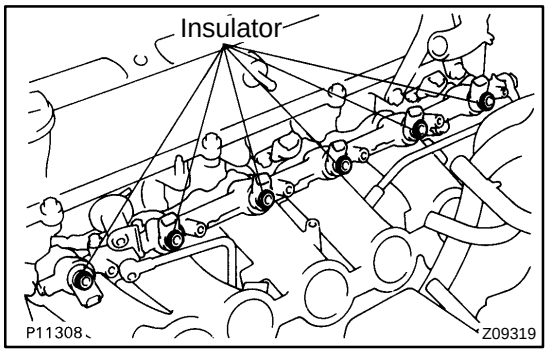

(b) Remove the 6 insulators from the injectors.

HINT:

At the time of installation, please refer to the following items.

Use 6 new insulators.

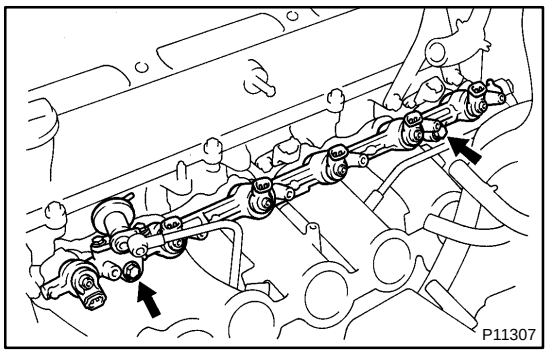

(c) Remove the 2 bolts, the delivery pipe and 6 injectors assembly.

Torque: 21 N·m (210 kgf·cm, 15 ft·lbf)

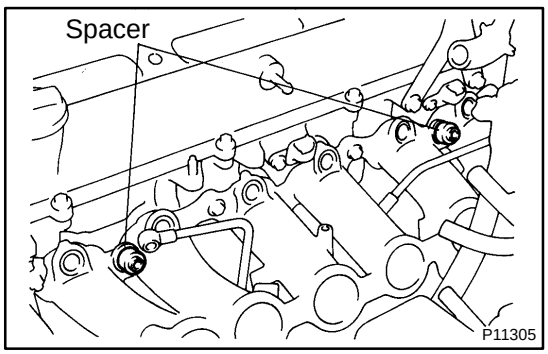

(d) Remove the 2 spacers from the intake manifold.

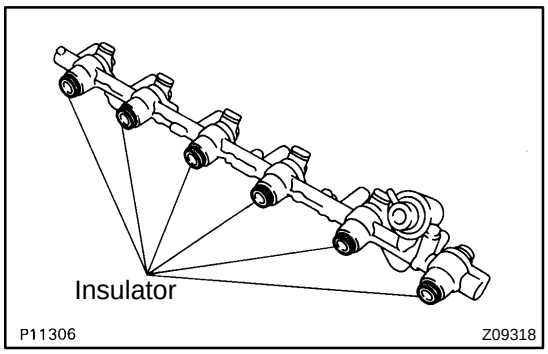

(e) Remove the 6 insulators from the delivery pipe.

HINT:

At the time of installation, please refer to the following items.

Use 6 new insulators.

SF0GT-02

INSPECTION

1. INSPECT INJECTOR INJECTION

CAUTION:

Keep injector clear of sparks during the test.

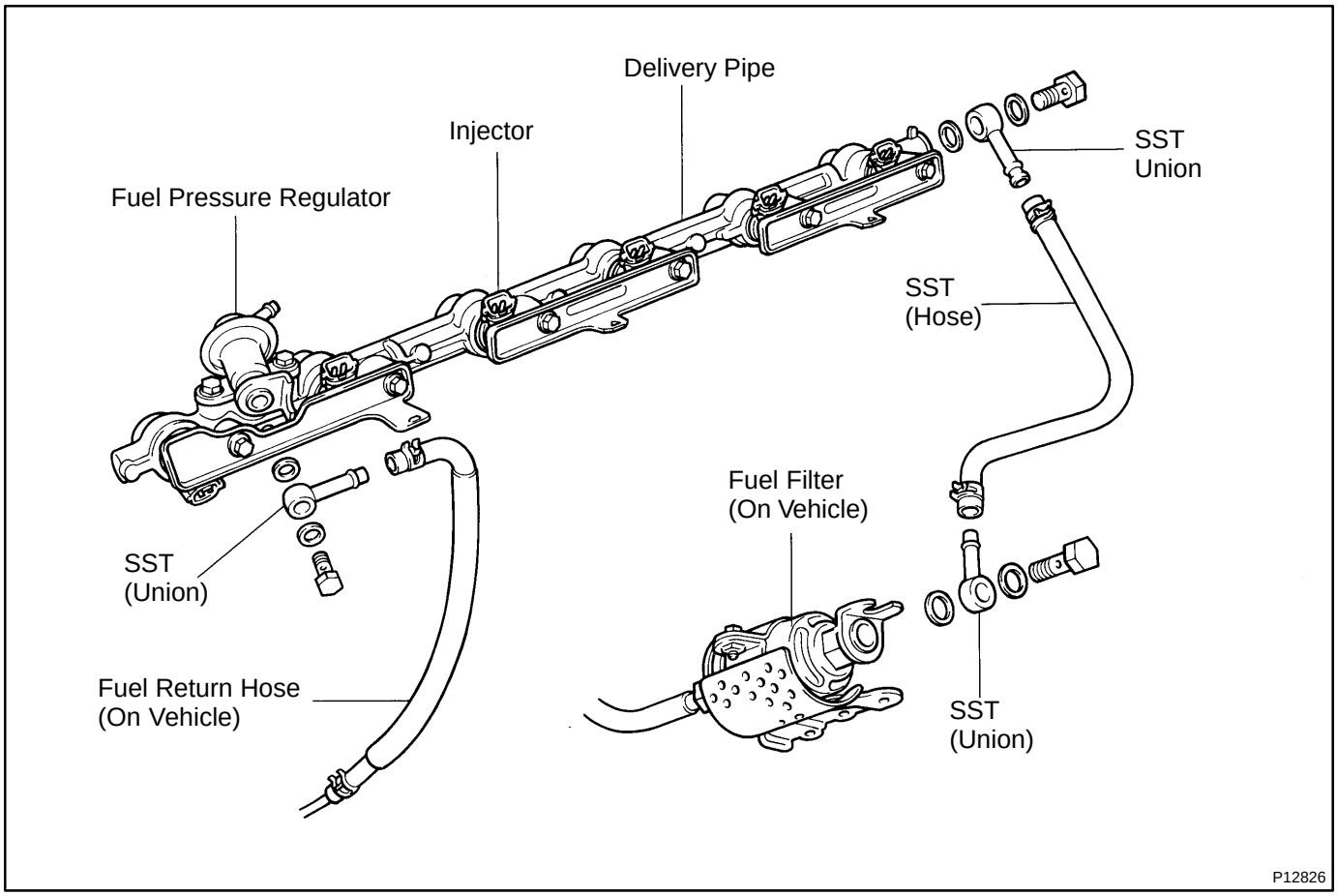

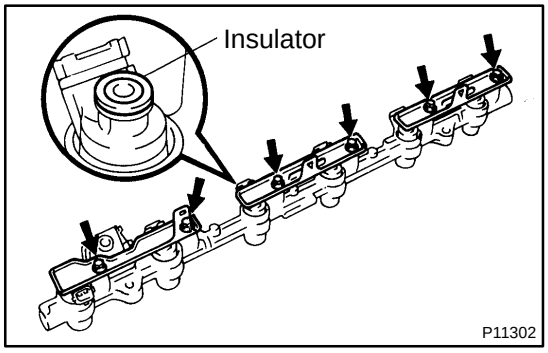

(a) Install the insulator to each injector.

(b) Install the 3 injector holders with the 6 bolts.
Torque: 7.8 N·m (80 kgf·cm, 69 in.·lbf)

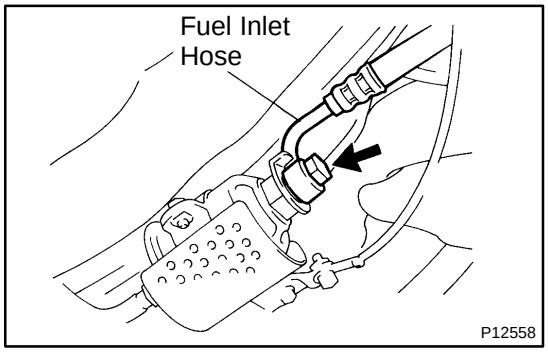

(c) Remove the union bolt and 2 gaskets, and disconnect the fuel inlet hose from the fuel filter outlet.

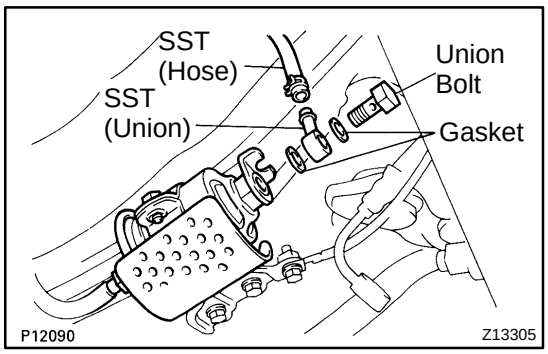

(d) Connect SST (hose) to the fuel filter outlet with SST (union), the 2 gaskets and union bolt.
SST 09268-41046 (90405-09015)
Torque: 29 N·m (300 kgf·cm, 22 ft·lbf)

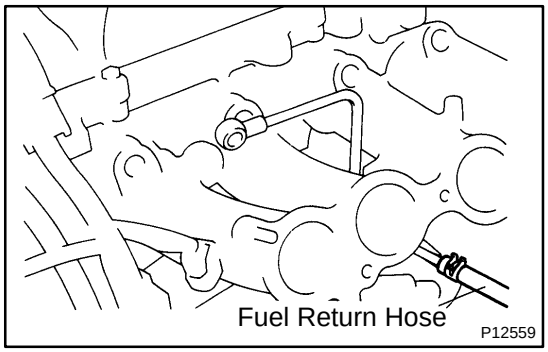

(e) Disconnect the fuel return hose from the fuel return pipe.

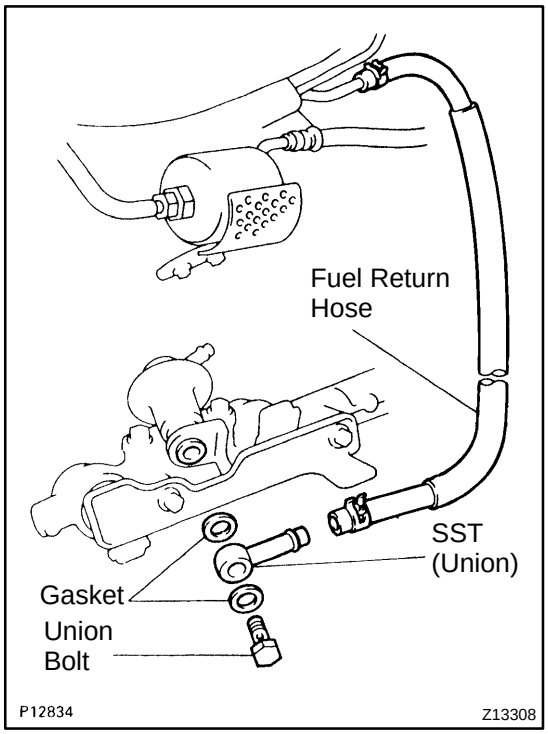

(f) Connect the fuel return hose to the fuel outlet of the pressure regulator on the delivery pipe with SST (union), the 2 gaskets and union bolt.
SST 09268-41046 (09268-41071)

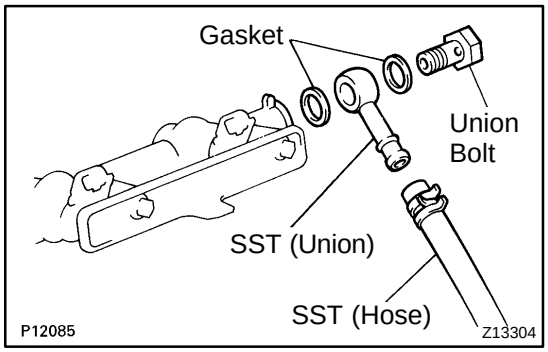

(g) Connect SST (hose) to the fuel inlet of the delivery pipe with SST (union), the 2 gaskets and union bolt.
SST 09268-41046 (90405-09015)

(h) Put the injector into the graduated cylinder.

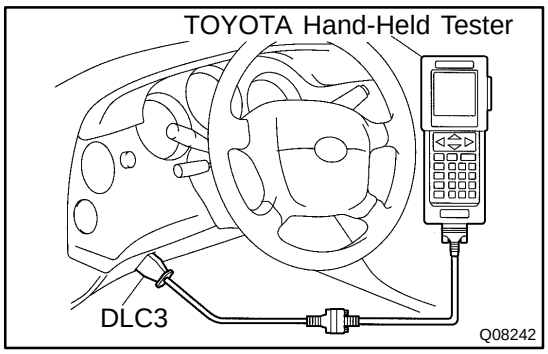

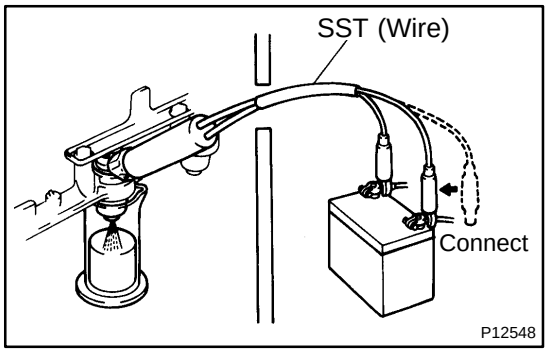

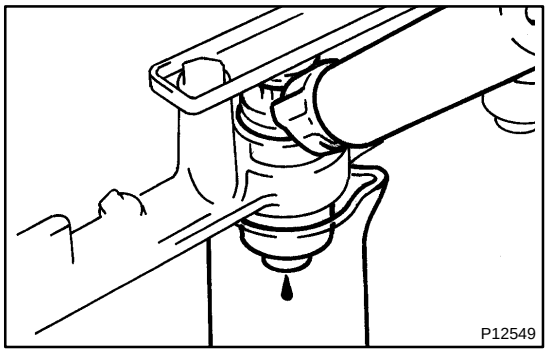

(i) Connect the TOYOTA hand-held tester to the DLC3.
(j) Turn the ignition switch ON and TOYOTA hand-held tester main switch ON.

NOTICE:

Do not start the engine.

(k) Select the active test mode on the TOYOTA hand-held tester.
(l) Please refer to the TOYOTA hand-held tester operator's manual for further details.
(m) If you have no TOYOTA hand-held tester, connect the positive (+) and negative (-) leads from the battery to the fuel pump connector.
(n) Connect SST (wire) to the injector and battery for 15 seconds, and measure the injection volume with a graduated cylinder. Test each injector 2 or 3 times.
SST 09842-30060
Injection volume:
111 - 141 cm^3 (6.8 - 8.6 cu in.) per 15 sec.
Difference between each injector:
10 cm^3 (0.6 cu in.) or less

If the injection volume is not as specified, replace the injector.

2. INSPECT LEAKAGE

(a) In the condition above, disconnect the tester probes of SST (wire) from the battery and check the fuel leakage from the injector.
SST 09842-30060
Fuel drop:
One drop or less per minutes
(b) Turn the ignition switch to LOCK.
(c) Disconnect the negative (-) terminal cable from the battery.
(d) Remove the SST.
SST 09268-41046
(e) Reconnect the fuel inlet hose to the fuel filter with 2 new gaskets and the union bolt.
Torque: 29 N·m (300 kgf·cm, 22 ft·lbf)
(f) Reconnect the fuel return hose to the fuel return pipe.
(g) Remove the 6 bolts, 3 injector holders and 6 insulators.
(h) Disconnect the TOYOTA hand- held tester from the DLC3.

SF0GU-01

REPLACEMENT

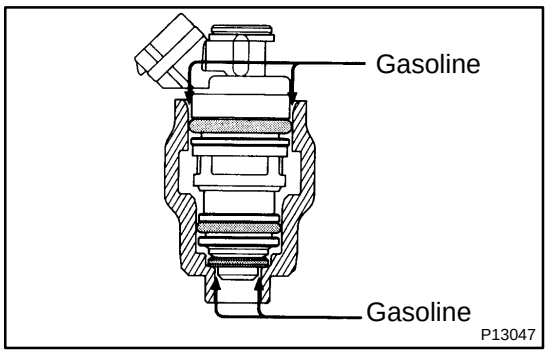

1. REMOVE INJECTORS

(a) Apply gasoline between the delivery pipe and injectors.

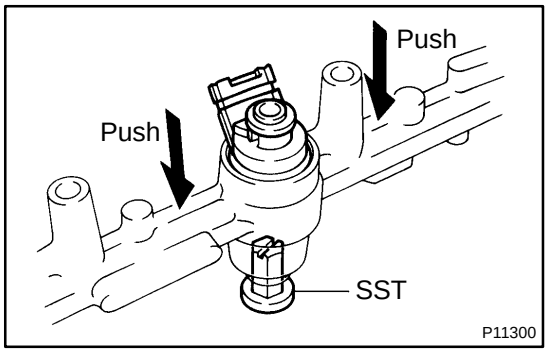

(b) Using SST, lift up the 6 injectors.
SST 09268-74010

(c) Remove the insulator and 2 O-rings from each injector.

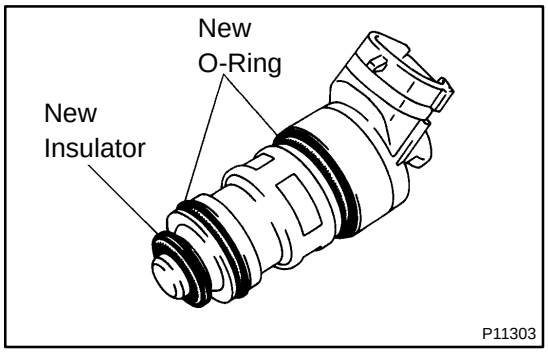

2. REINSTALL INJECTORS

(a) Apply a light coat of gasoline to 2 new O-rings.

(b) Install the 2 O-rings and new insulator to each injector.

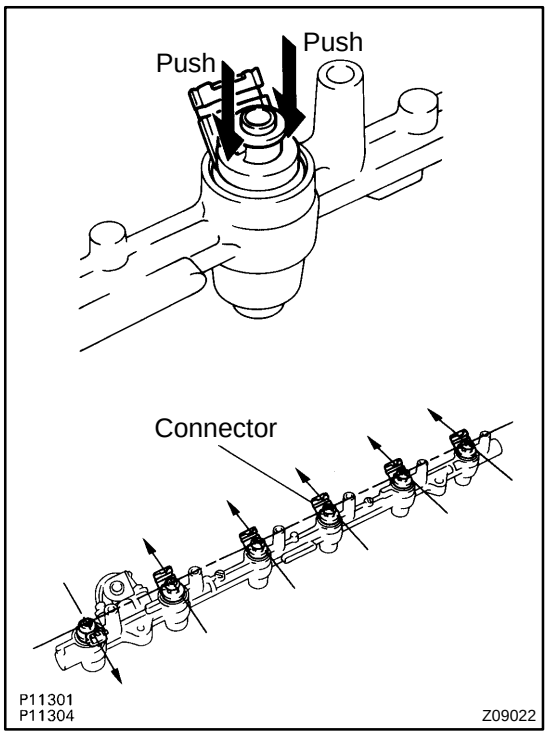

(c) Push in the 6 injectors so that the injector connectors are positioned as shown in the illustration.

FUEL PRESSURE PULSATION DAMPER

COMPONENTS

SF0GW-01

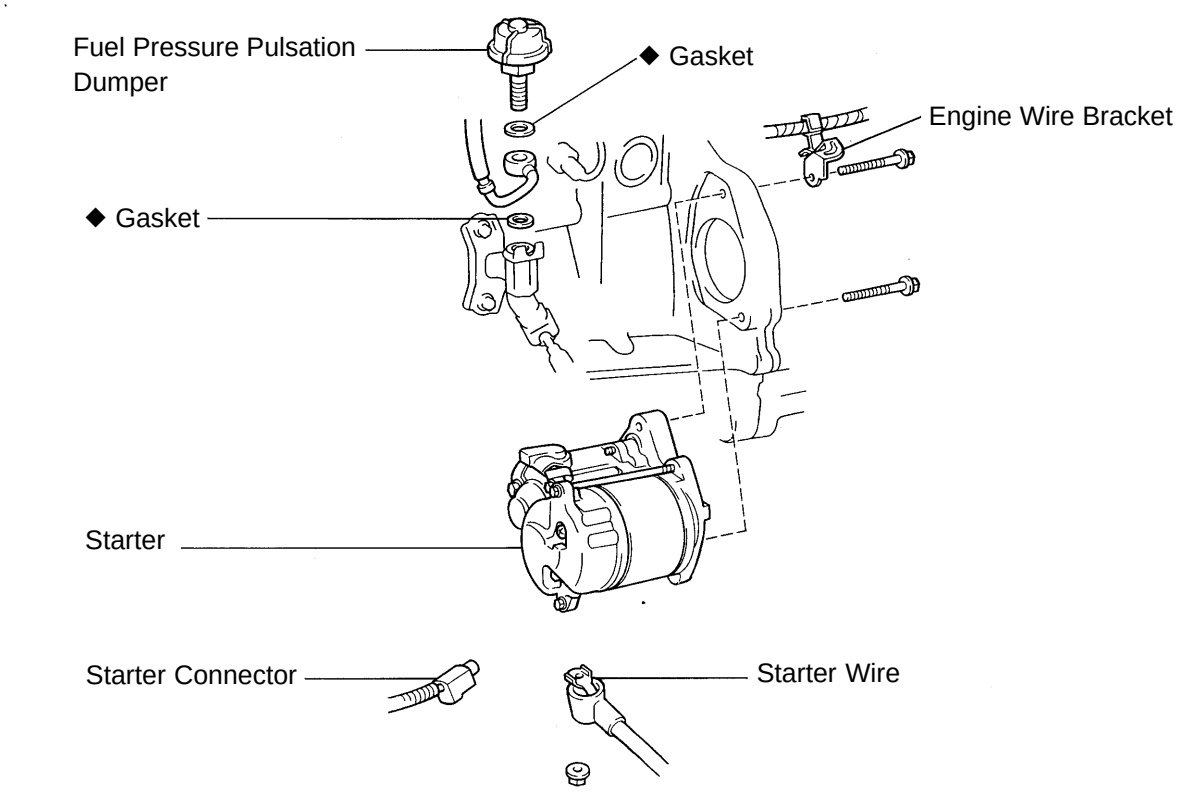

◆ Non-reusable part

P18730

SF0GX-01

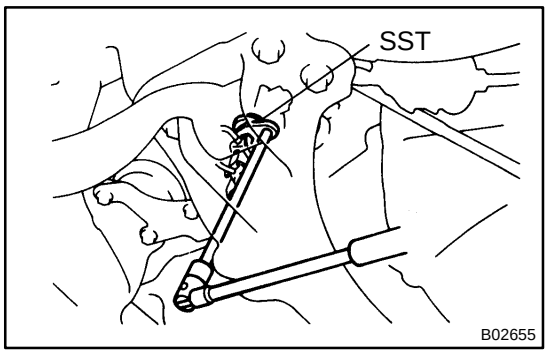

REMOVAL

1. REMOVE STARTER
(See page ST-4)

2. REMOVE FUEL PRESSURE PULSATION DAMPER

(a) Using SST, remove the pulsation damper and upper gasket.
SST 09612-24014 (09617-24011)

(b) Disconnect the fuel inlet pipe from the fuel pipe support, and remove the lower gasket.

SF0GY-02

INSTALLATION

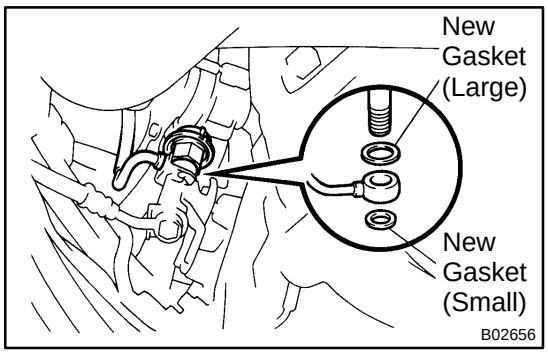

1. INSTALL FUEL PRESSURE PULSATION DAMPER

(a) Install the fuel inlet pipe and pulsation damper with 2 new gaskets.

HINT:

Different sized gaskets are used for the upper (large size) and lower (small size).

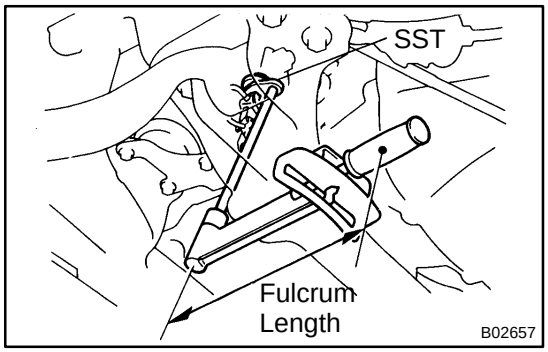

(b) Using SST, tighten the pulsation damper.

SST 09612-24014 (09617-24011)

Torque:

41 N·m (420 kgf·cm, 30 ft·lbf)

35 N·m (350 kgf·cm, 25 ft·lbf) for SST

HINT:

Use a torque wrench with a fulcrum length of 30 cm (11.81 in.).

2. INSTALL STARTER

(See page ST-15)

3. CHECK FOR FUEL LEAKS

(See page SF-1)

SF0H0-02

COMPONENTS

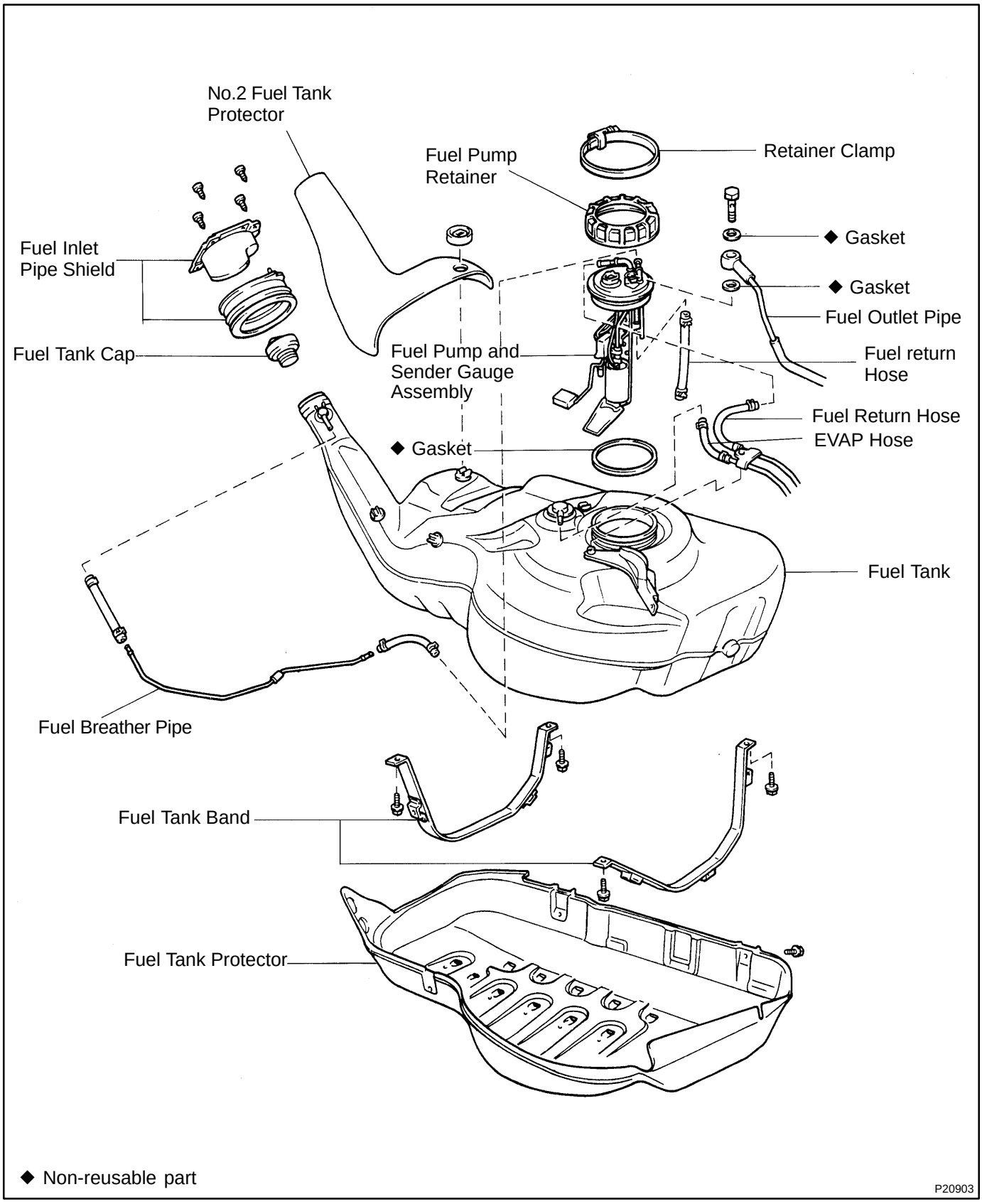

SF0H1-01

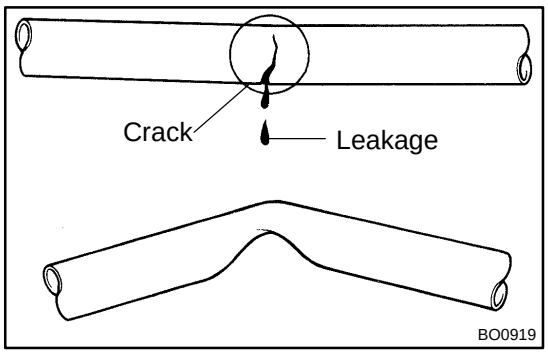

INSPECTION

INSPECT FUEL TANK AND LINE

(a) Check the fuel lines for cracks or leakage, and all connections for deformation.

(b) Check the fuel tank vapor vent system hoses and connections for looseness, sharp bends or damage.

(c) Check the fuel tank for deformation, cracks, fuel leakage or tank band looseness.

(d) Check the filler neck for damage or fuel leakage.

(e) Hose and tube connections are as shown in the illustration.

If a problem is found, repair or replace the part as necessary.

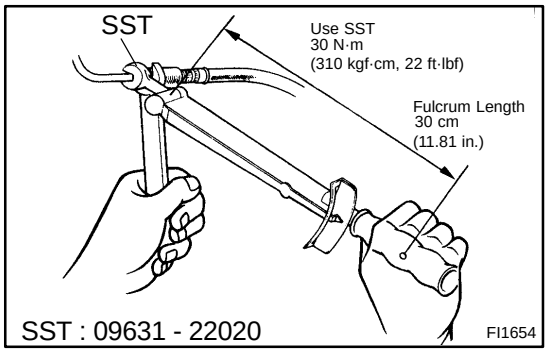

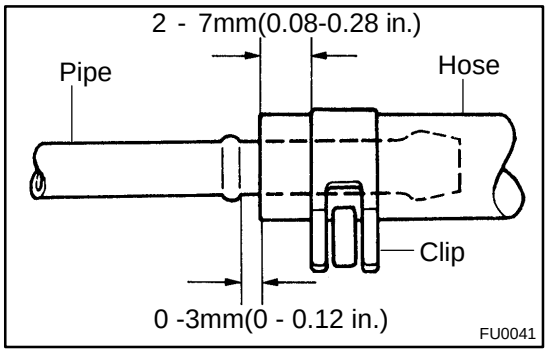

MASS AIR FLOW (MAF) METER

COMPONENTS

SF0H2-01

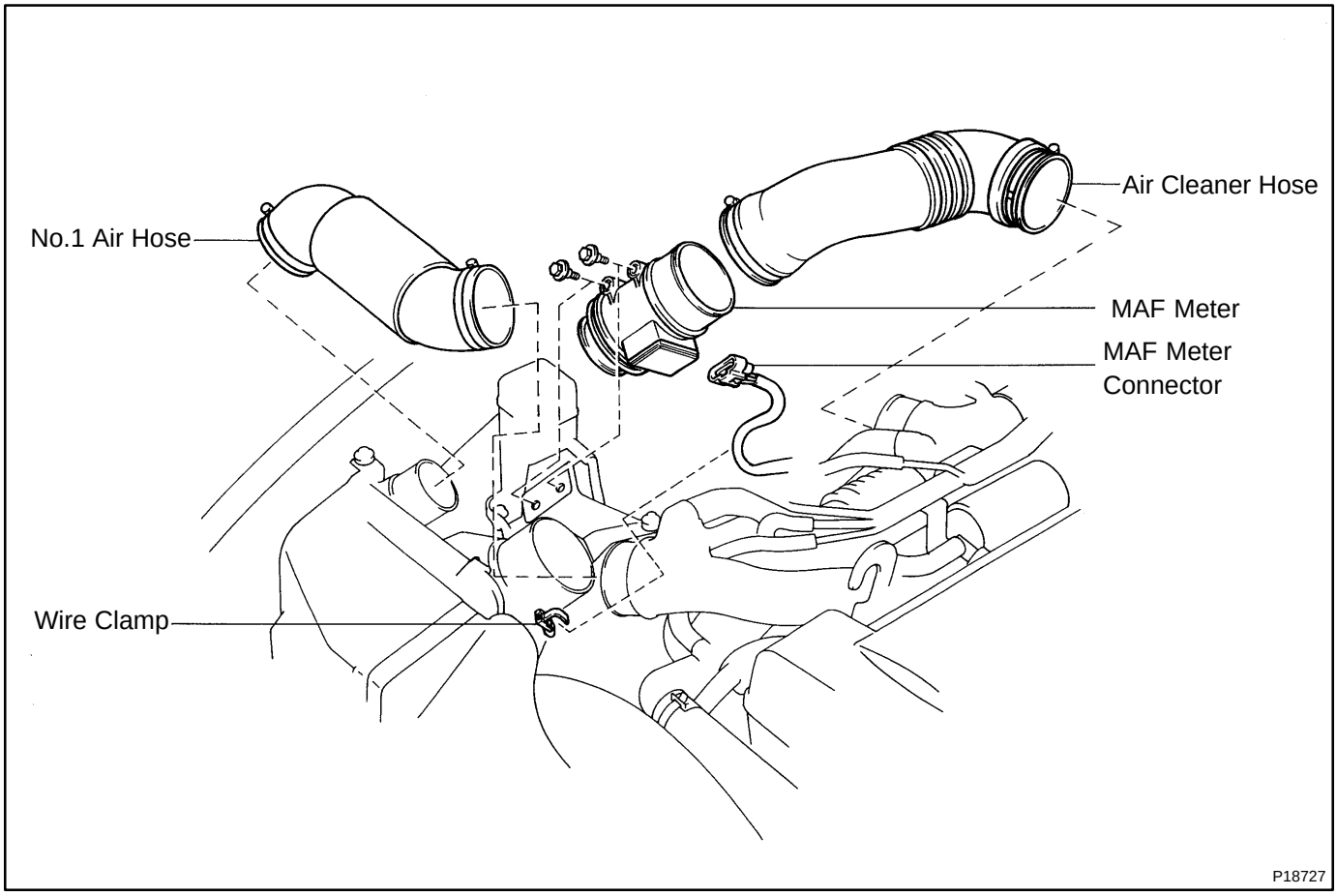

SF0H3-01

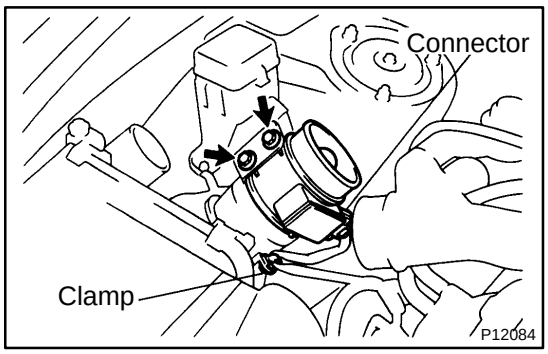

REMOVAL

1. REMOVE NO.1 AIR HOSE

2. REMOVE AIR CLEANER HOSE

3. REMOVE MAF METER

(a) Remove the 2 bolts, and disconnect the MAF meter from the air cleaner case.

Torque: 6.9 N·m (70 kgf·cm, 61 in.·lbf)

(b) Disconnect the MAF meter wire from the wire clamp on the air cleaner case.

(c) Disconnect the MAF meter connector, and remove the MAF meter.

SF0H4-01

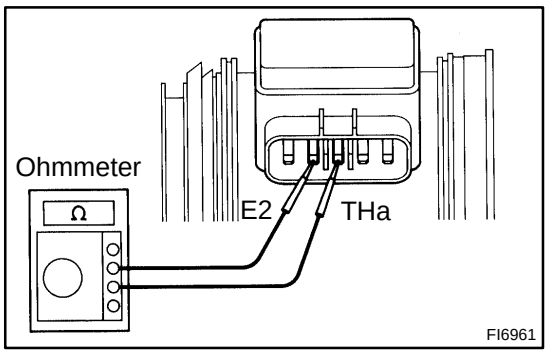

INSPECTION

1. INSPECT MAF METER RESISTANCE

Using an ohmmeter, measure the resistance between terminals THA and E2.

Resistance:

-20˚C (-4˚F)	10 - 20 kΩ
0˚C (32˚F)	4 - 7 kΩ
20˚C (68˚F)	2 - 3 kΩ
40˚C (104˚F)	0.9 - 1.3 kΩ
60˚C (140˚F)	0.4 - 0.7 kΩ

If the resistance is not as specified, replace the MAF meter.

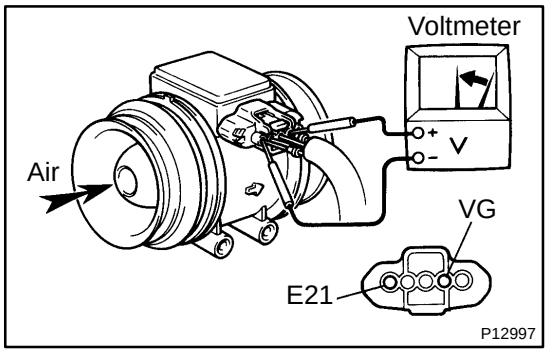

2. INSPECT MAF METER OPERATION

(a) Connectfthe MAF meter connector.
(b) Connectfthe negative (-) terminal cable to the battery.
(c) Using a voltmeter, connect the positive (+) tester probe to terminal VG, and negative (-) tester probe to terminal E21.
(d) Turn the ignition switch ON.
(e) Blow air into the MAF meter, and check that the voltage fluctuates.

If operation is not as specified, replace the MAF meter.

(f) Turn the ignition switch OFF.
(g) Disconnect the negative (-) terminal cable from the battery.
(h) Disconnect the MAF meter connector.

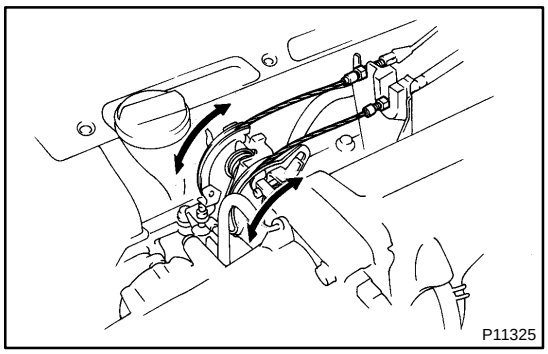

THROTTLE BODY

SF0H6-01

ON-VEHICLE INSPECTION

1. INSPECT THROTTLE BODY

(a) Check that the throttle linkage moves smoothly.

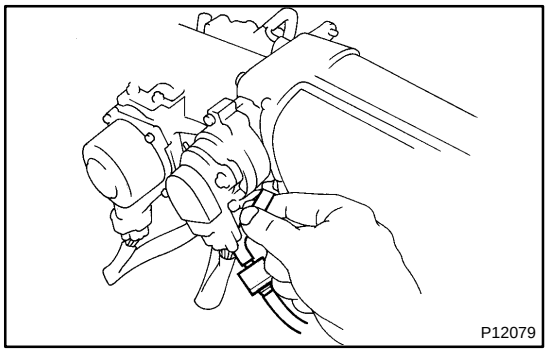

(b) Check the vacuum at the purge port.
- Start the engine.
- Check the vacuum with your finger.

Port name	At idle	At 3,000 rpm
Purge	No vacuum	Vacuum

2. INSPECT DASHPOT

(a) Warm up engine.
Allow the engine to warm up to normal operating temperature.

(b) Check idle speed.
Idle speed (Transmission in neutral position):
650 ± 50 rpm

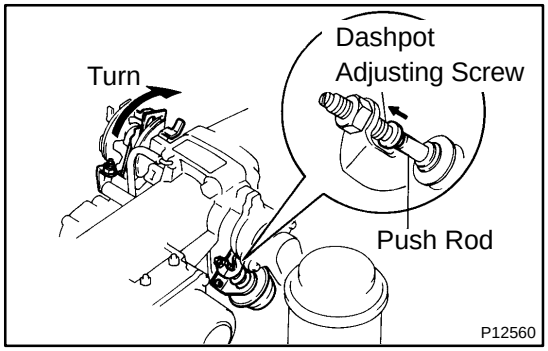

(c) Check and adjust dashpot setting speed.
(1) Disconnect the control cables from the throttle body.
(2) Turn the throttle linkage until the dashpot adjusting screw starts to separate from the push rod. Then keep the throttle linkage at that position.
(3) Check that the dashpot is set.
Dashpot setting speed: 2,300 ± 400 rpm
(4) Reconnect the control cables to the throttle body.

(d) Check VTV operation
(1) Maintain the engine speed at 3,500 rpm.
(2) Release the throttle valve, and check that the engine returns to idle in a few seconds.

3. INSPECT THROTTLE OPENER

(a) Warm up engine
Allow the engine to warm up to normal operating temperature.

(b) Check idle speed
Idle speed (Transmission in neutral position):
650 ± 50 rpm

(c) Check throttle opener setting speed
(1) Disconnect the throttle opener vacuum hose from the throttle body, and plug the throttle body port.
(2) Maintain the engine speed at 2,500 rpm.
(3) Release the throttle valve.
(4) Check that the throttle opener is set.
Throttle opener setting speed: 1,500 ± 200 rpm
(5) Adjust the throttle opener setting speed by turning the throttle opener adjusting screw.
(6) Reconnect the throttle opener vacuum hose to the throttle body.

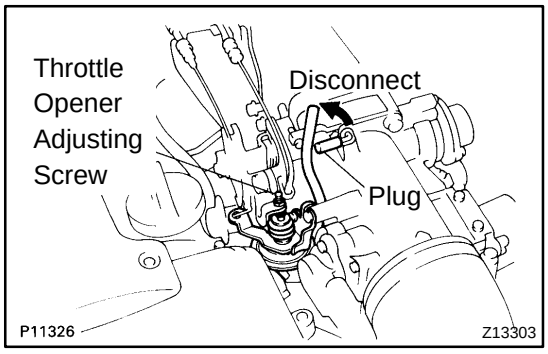

SF0H7-01

COMPONENTS

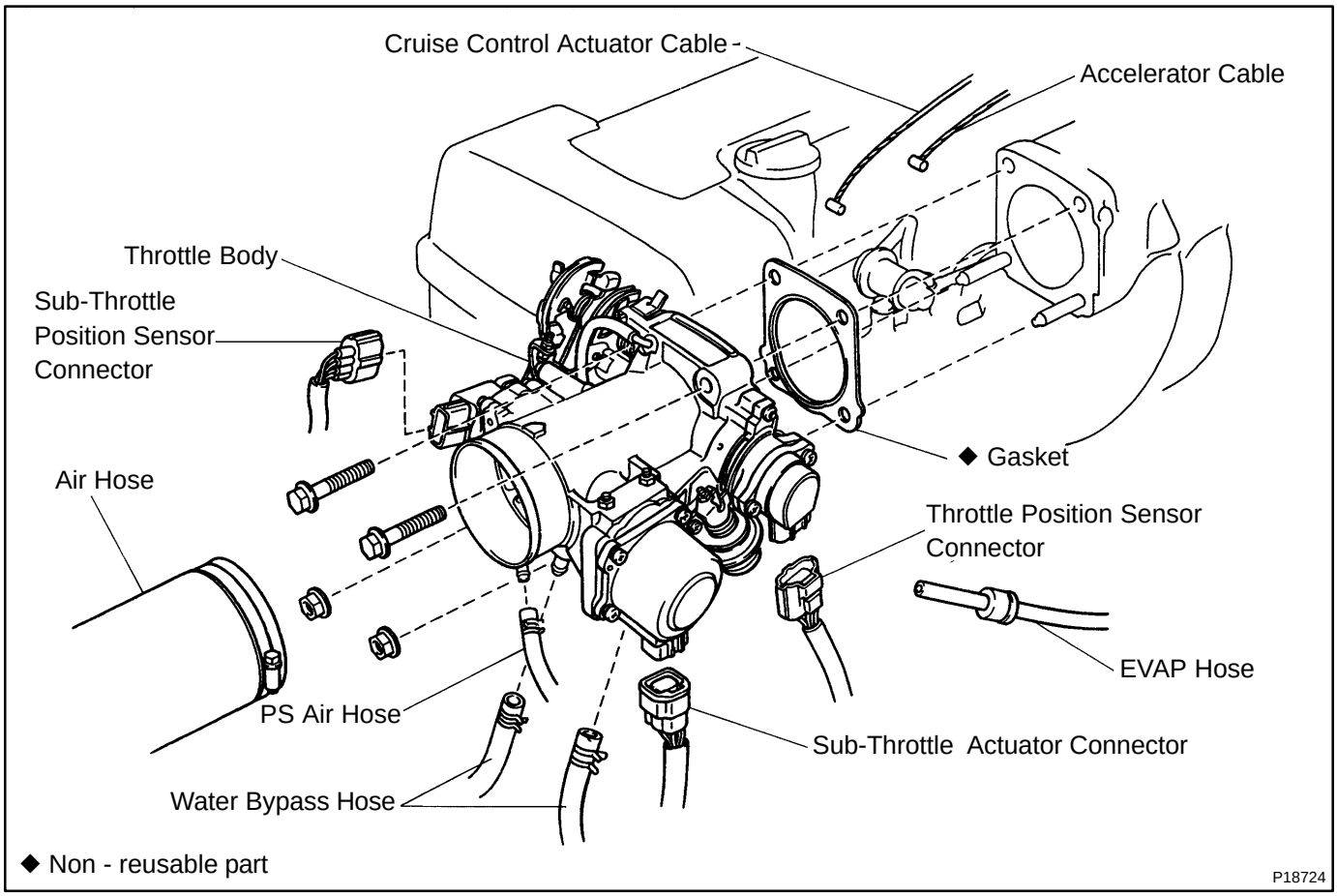

SF0H8-01

REMOVAL

1. DRAIN ENGINE COOLANT

2. REMOVE THROTTLE BODY

(a) Disconnect the hose, cables and connectors from the throttle body:
- (1) Air hose
- (2) Accelerator cable
- (3) Cruise control actuator cable
- (4) Throttle position sensor connector
- (5) Sub-throttle position sensor connector
- (6) Sub-throttle actuator connector

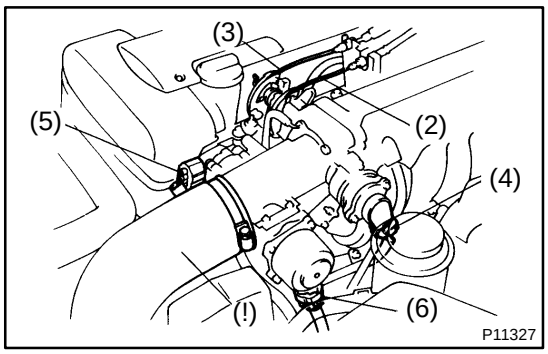

(b) Remove the 2 bolts and 2 nuts, and disconnect the throttle body from the air intake chamber.
Torque: 21 N·m (210 kgf·cm, 15 ft·lbf)

(c) Remove the gasket.

HINT:

Use a new gasket.

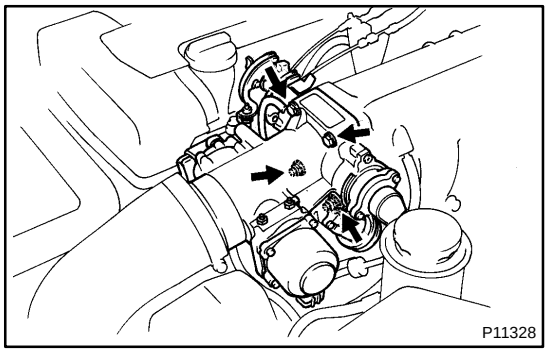

(d) Disconnect these hoses from the throttle body, and remove the throttle body:
- (1) EVAP hose
- (2) Water bypass hose (from No.4 water bypass pipe)
- (3) Water bypass hose (from cylinder head)
- (4) PS air hose

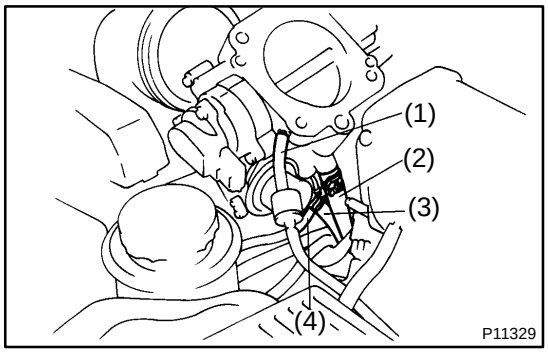

SF0H9-02

INSPECTION

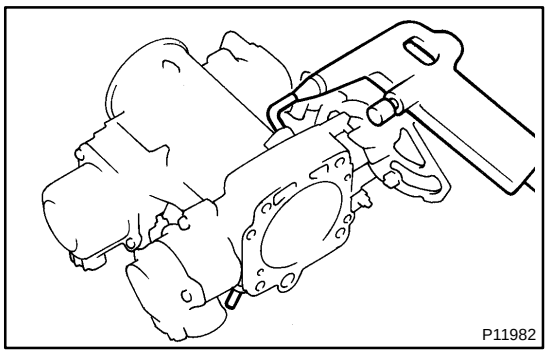

1. CLEAN THROTTLE BODY

(a) Using a soft brush and carburetor cleaner, clean the cast parts.

(b) Using compressed air, clean all the passages and apertures.

NOTICE:

To prevent deterioration, do not clean the throttle position sensors, actuator, dashpot and throttle opener.

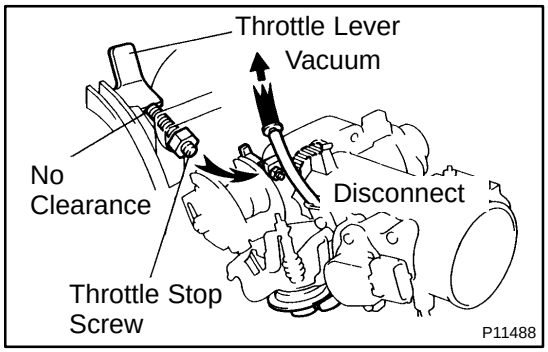

2. INSPECT THROTTLE VALVE

(a) Disconnect the throttle opener vacuum hose from the throttle body.

(b) Apply vacuum to the throttle opener.

(c) Check that there is no clearance between the throttle stop screw and throttle lever when the throttle valve is fully closed.

(d) Reconnect the vacuum hose to the throttle body.

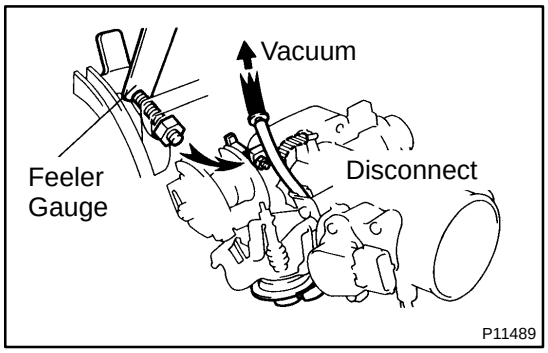

3. INSPECT THROTTLE POSITION SENSOR

(a) Disconnect the throttle opener vacuum hose from the throttle body.

(b) Apply vacuum to the throttle opener.

(c) Insert a 0.54 mm (0.021 in.) or 0.70 mm (0.028 in.) feeler gauge between the throttle stop screw and stop lever.

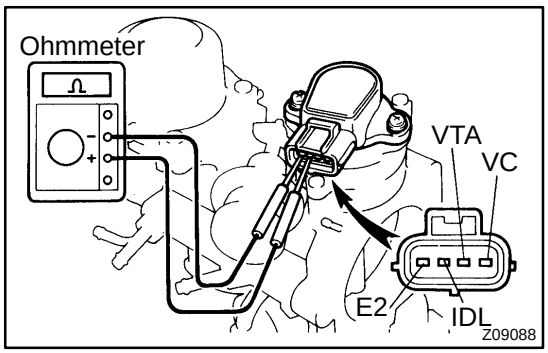

(d) Using an ohmmeter, measure the resistance between each terminal.

Clearance between lever and stop screw	Between terminals	Resistance
0 mm (0 in.)	VTA - E2	0.34 - 6.3 kΩ
0.54 mm (0.021 in.)	IDL - E2	0.5 kΩ or less
0.70 mm (0.028 in.)	IDL - E2	Infinity
Throttle valve fully open	VTA - E2	2.4 - 11.2 kΩ
-	VC - E2	3.1 - 7.2 kΩ

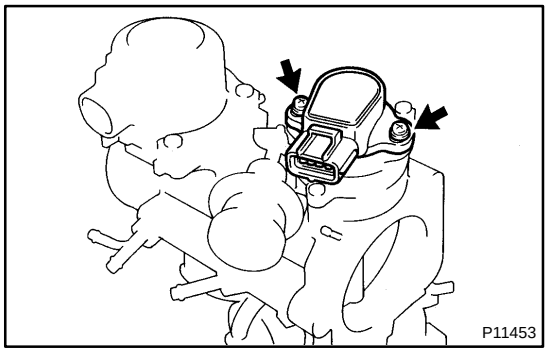

4. IF NECESSARY, ADJUST THROTTLE POSITION SENSOR

(a) Loosen the 2 set screws of the sensor.

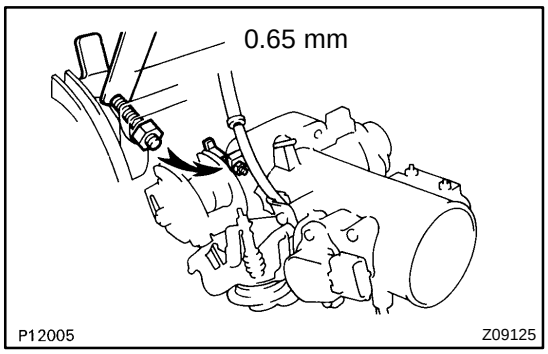

(b) Insert a 0.65 mm (0.026 in.) feeler gauge between the throttle stop screw and stop lever.

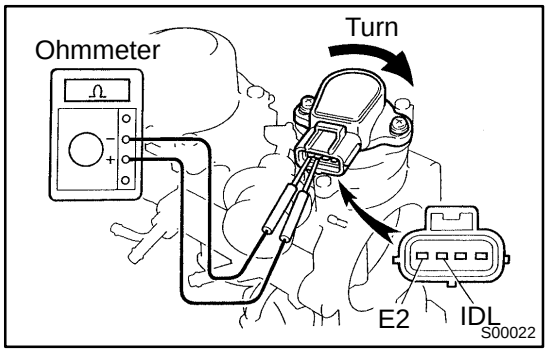

(c) Connect the tester probe of an ohmmeter to the terminals IDL and E2 of the sensor.

(d) Gradually turn the sensor clockwise until the ohmmeter deflects, and secure it with the 2 set screws.

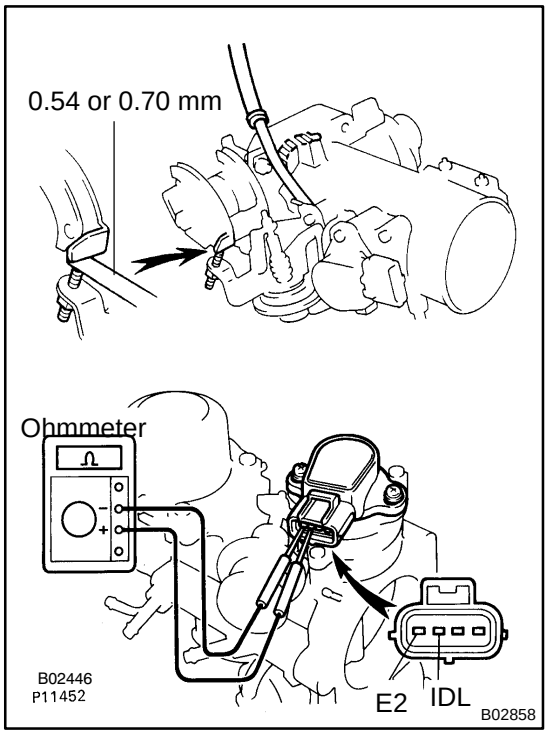

(e) Recheck the continuity between terminals IDL and E2.

Clearance between lever and stop screw	Continuity (IDL - E2)
0.54 mm (0.021 in.)	Continuity
0.75 mm (0.028 in.)	No continuity

(f) Reconnect the vacuum hose to the throttle body.

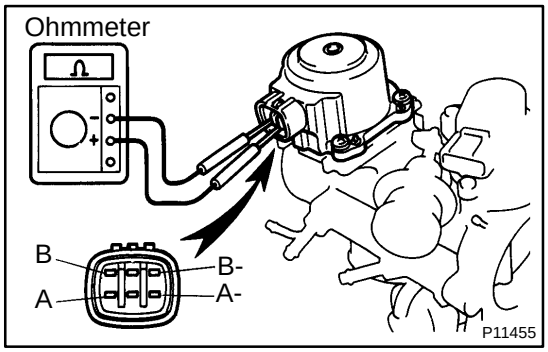

5. INSPECT SUB-THROTTLE ACTUATOR

Using an ohmmeter, measure the resistance between the terminals (A and A-,to B and B-).

Resistance: 0.82 - 0.98 Ω at 20˚C (68˚F)

If the resistance is not as specified, replace the actuator.

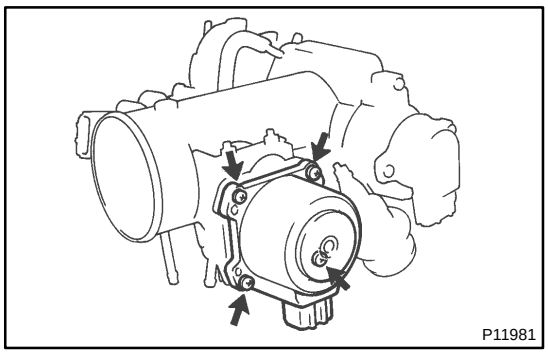

6. REMOVE SUB-THROTTLE ACTUATOR

Remove the 4 screws and sub-throttle actuator.

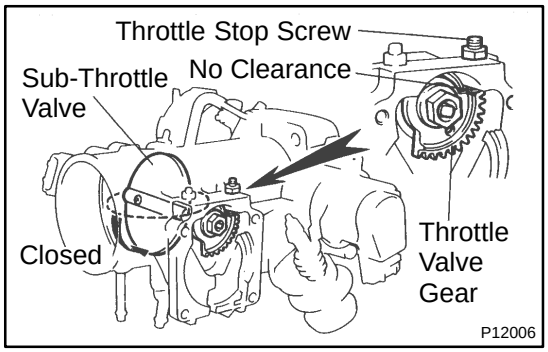

7. INSPECT SUB-THROTTLE VALVE

Check that there is no clearance between the throttle stop screw and throttle valve gear when the sub-throttle valve is fully closed.

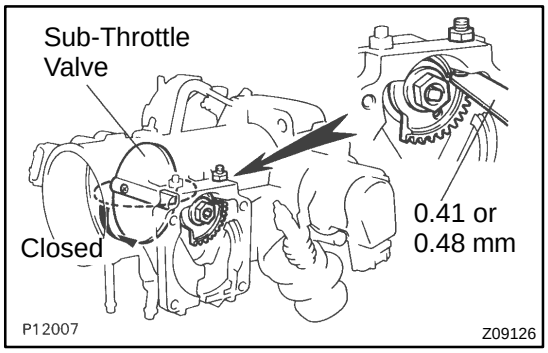

8. INSPECT SUB-THROTTLE POSITION SENSOR

(a) Set the sub-throttle valve to fully closed position.

(b) Insert a 0.41 mm (0.016 in.) or 0.48 mm (0.019 in.) feeler gauge between the throttle stop screw and throttle valve gear.

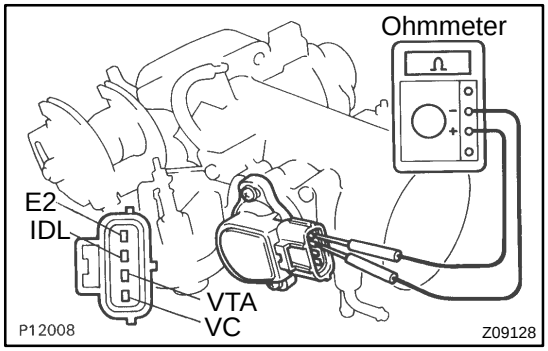

(c) Using an ohmmeter, measure the resistance between terminals.

Clearance between lever and stop screw	Between terminals	Resistance
0 mm (0 in.)	VTA - E2	0.3 - 6.3 kΩ
0.41 mm (0.016 in.)	IDL - E2	0.5 kΩ or less
0.48 mm (0.019 in.)	IDL - E2	Infinity
Throttle valve fully open	VTA - E2	2.0 - 10.8 kΩ
-	VC - E2	3.5 - 6.5 kΩ

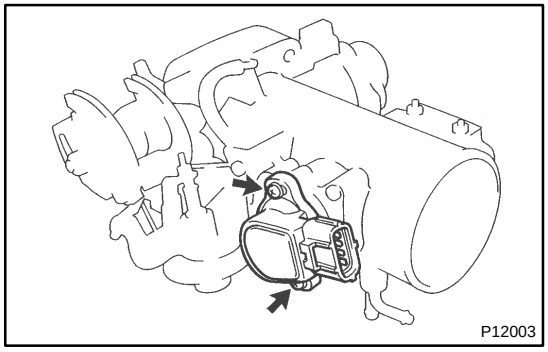

9. NECESSARY, ADJUST SUB-THROTTLE POSITION SENSOR

(a) Loosen the 2 set screws of the sensor.

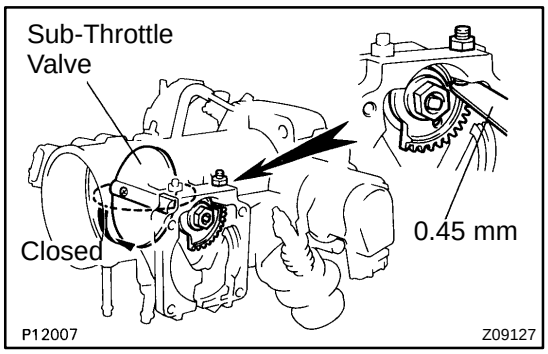

(b) Set the sub-throttle valve to fully closed position.
(c) Insert a 0.45 mm (0.018 in.) feeler gauge, between the throttle stop screw and throttle valve gear.

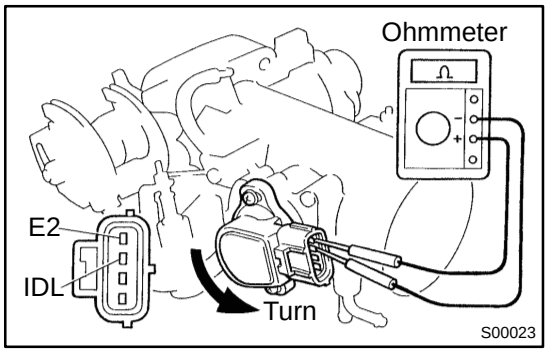

(d) Connect the tester probe of an ohmmeter to the terminals IDL and E2 of the sensor.
(e) Gradually turn the sensor clockwise until the ohmmeter deflects, and secure it with the 2 set screws.

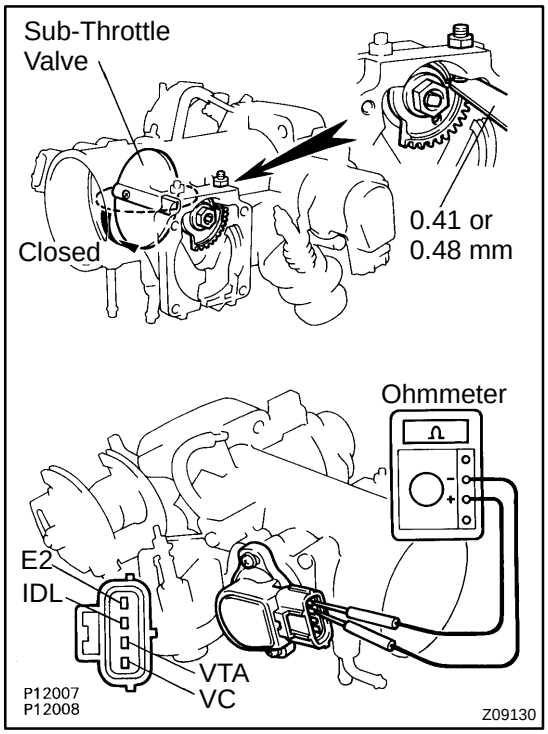

(f) Recheck the continuity between terminals IDL and E2.

Clearance between lever and stop screw	Continuity (IDL - E2)
0.41 mm (0.016 in.)	Continuity
0.48 mm (0.019 in.)	No continuity

10. REINSTALL SUB-THROTTLE ACTUATOR

Install the sub-throttle actuator with the 4 screws.

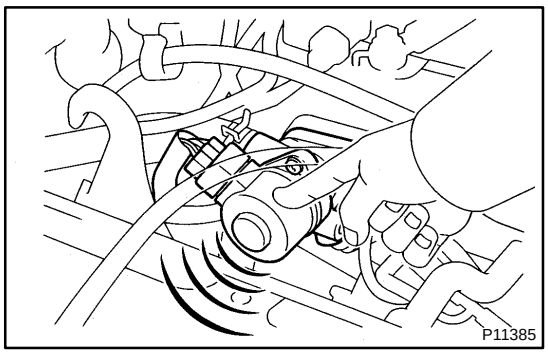

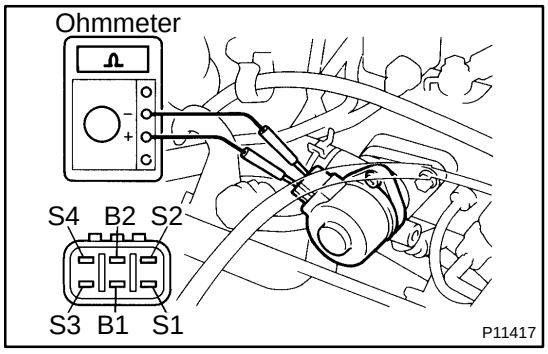

IDLE AIR CONTROL (IAC) VALVE

SF0HB-01

ON-VEHICLE INSPECTION

1. INSPECT IAC VALVE FOR OPERATING SOUND

Check that there is a clicking sound immediately after stopping the engine.

If operation is not as specified, check the IAC valve, wiring and ECM.

2. INSPECT IAC VALVE RESISTANCE

NOTICE:

"Cold" and "Hot" in these sentences express the temperature of the coils themselves.

"Cold" is from -10˚C (14˚F) to 50˚C (122˚F) and "Hot" is from 50˚C (122˚F) to 100˚C (212˚F).

Using an ohmmeter, measure the resistance between the terminals (B1 (or B2) to others).

Resistance:

Cold	15 - 25 Ω
Hot	20 - 30 Ω

If resistance is not as specified, replace the IAC valve.

SF0HC-01

COMPONENTS

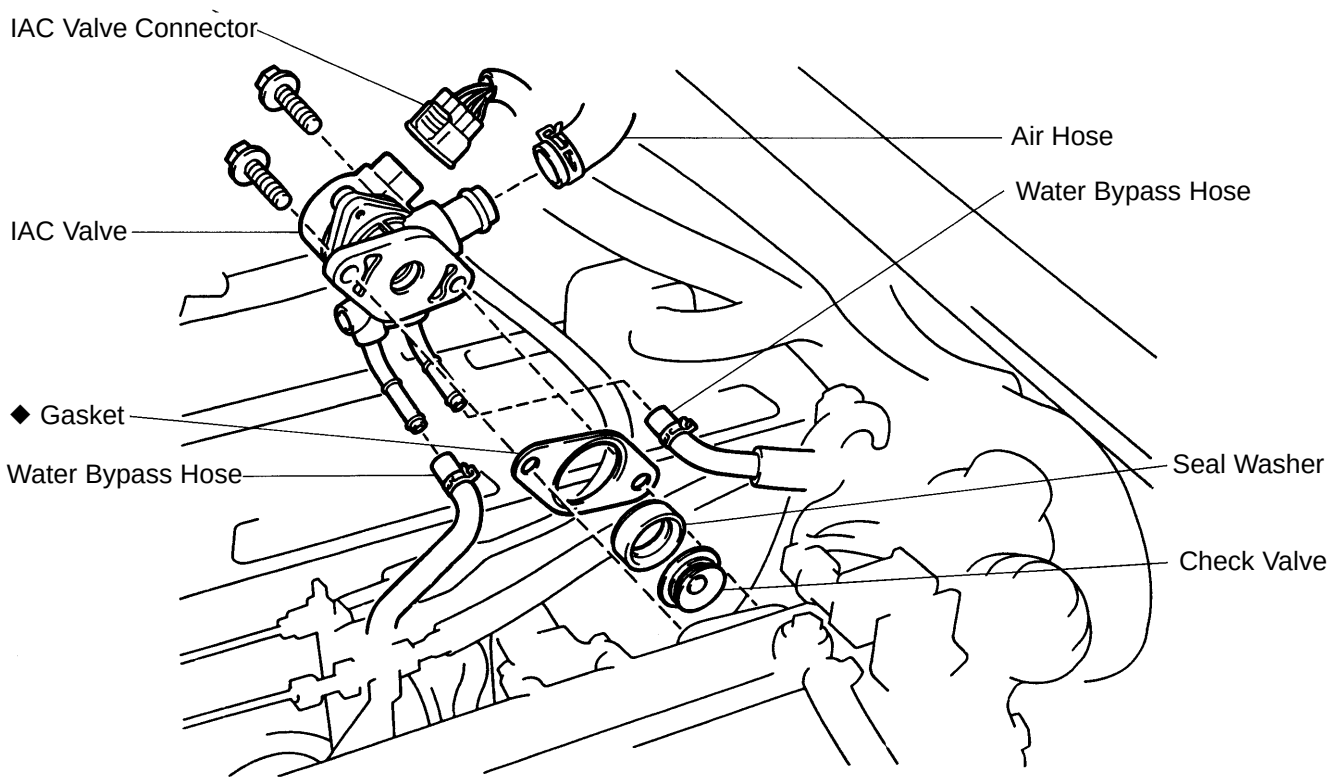

◆ Non-reusable part

P18728

SF0HD-01

REMOVAL

1. DRAIN ENGINE COOLANT

2. DISCONNECT IAC VALVE CONNECTOR

3. REMOVE IAC VALVE

(a) Remove the 2 bolts, and disconnect the IAC valve from the air intake chamber.

(b) Remove the gasket
.

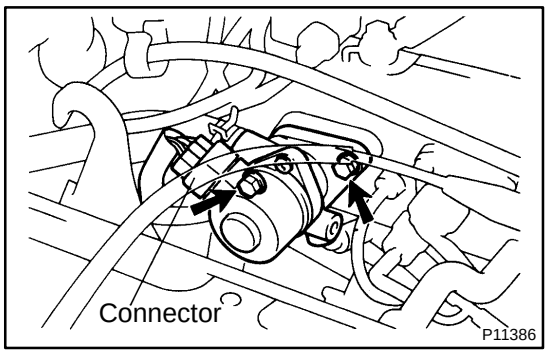

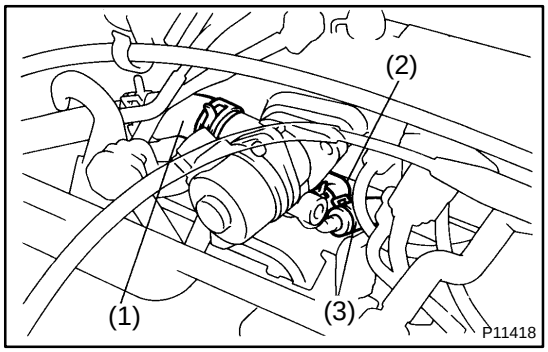

(c) Disconnect these hoses from the IAC valve, and remove the IAC valve:
(1) Air hose
(2) Water bypass hose (from No.2 water bypass pipe)
(3) Water bypass hose (from No.4 water bypass pipe)

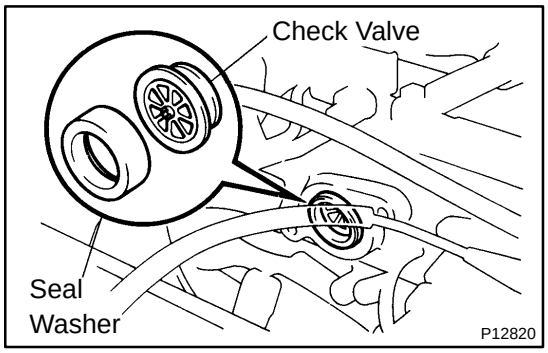

(d) Remove the seal washer and check valve.

SF0HE-01

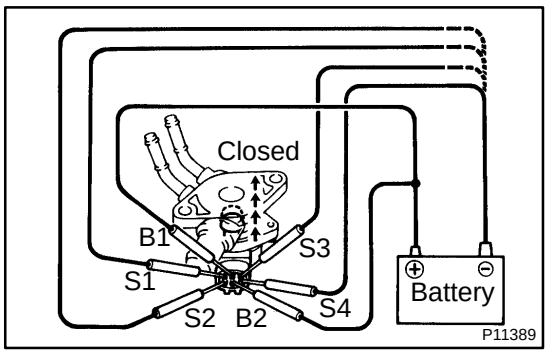

INSPECTION

INSPECT IAC VALVE OPERATION

(a) Apply battery positive voltage to terminals B1 and B2, and while repeatedly grounding S1 - S2 - S3 - S4 - S1 in sequence, and check that the valve moves toward the closed position.

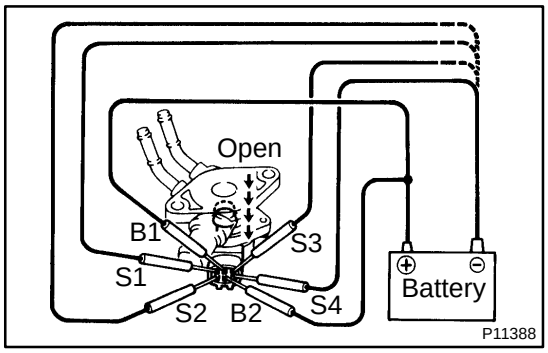

(b) Apply battery positive voltage to terminals B1 and B2, and while repeatedly grounding S4 - S3 - S2 - S1 - S4 in sequence, check that the valve moves toward the open position.

If operation is not as specified, replace the IAC valve.

SF0HF-01

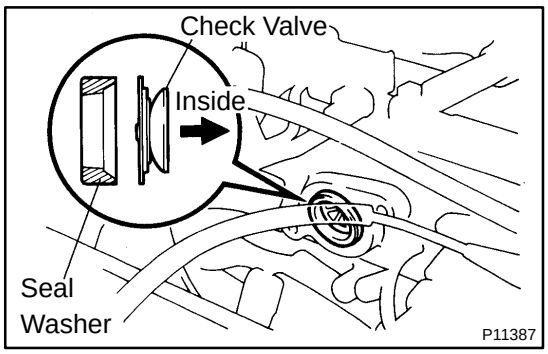

INSTALLATION

1. INSTALL IAC VALVE

(a) Install the check valve and seal washer.

NOTICE:

Be careful of the check valve and seal washer installation direction.

(b) Connect these hoses:
- Air hose
- Water bypass hose (from No.2 water bypass pipe)
- Water bypass hose (from No.4 water bypass pipe)

(c) Install a new gasket and the IAC valve with the 2 bolts.
Torque: 21 N·m (210 kgf·cm, 15 ft·lbf)

2. CONNECT IAC VALVE CONNECTOR

3. FILL WITH ENGINE COOLANT

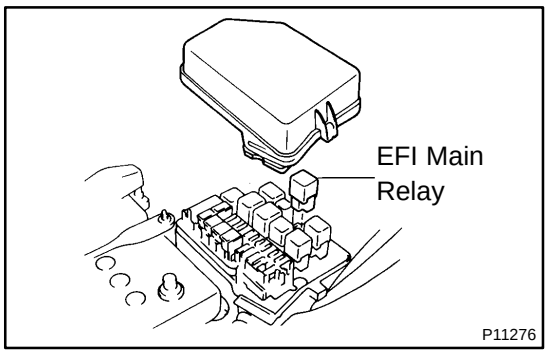

EFI MAIN RELAY

SF0HG-01

INSPECTION

1. REMOVE EFI MAIN RELAY

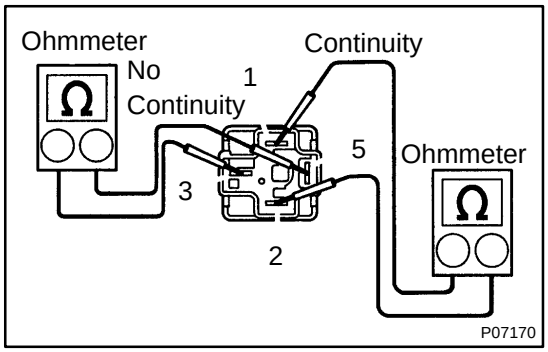

2. INSPECT EFI MAIN RELAY CONTINUITY

(a) Using an ohmmeter, check that there is continuity between terminals 1 and 2.

If there is no continuity, replace the relay.

(b) Check that there is no continuity between terminals 3 and 5.

If there is continuity, replace the relay.

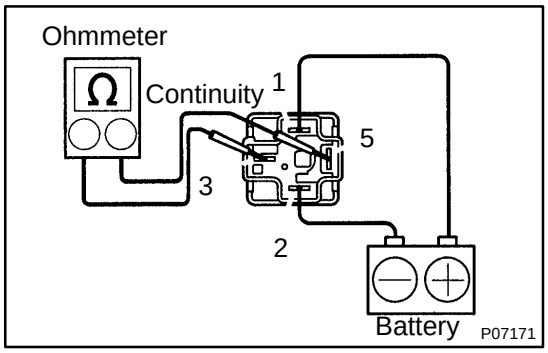

3. INSPECT EFI MAIN RELAY OPERATION

(a) Apply battery positive voltage across terminals 1 and 2.

(b) Using an ohmmeter, check that there is continuity between terminals 3 and 5.

If there is no continuity, replace the relay.

4. REINSTALL EFI MAIN RELAY

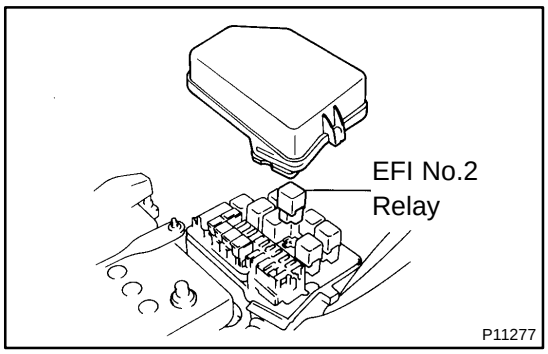

EFI NO.2 RELAY

SF0HH-01

INSPECTION

1. REMOVE EFI NO.2 RELAY

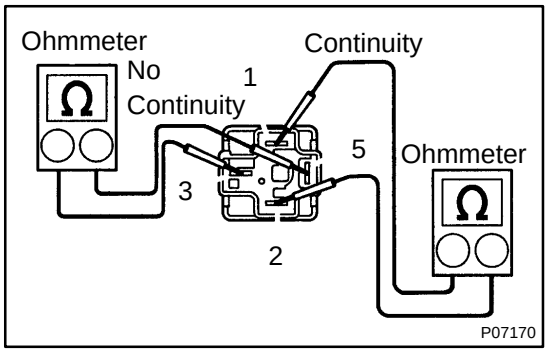

2. INSPECT EFI NO.2 RELAY CONTINUITY

(a) Using an ohmmeter, check that there is continuity between terminals 1 and 2.

If there is no continuity, replace the relay.

(b) Check that there is no continuity between terminals 3 and 5.

If there is continuity, replace the relay.

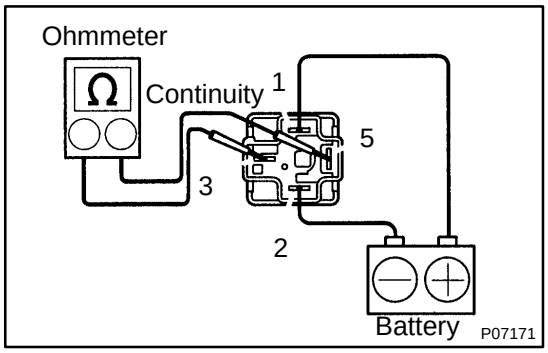

3. INSPECT EFI NO.2 RELAY OPERATION

(a) Apply battery positive voltage across terminals 1 and 2.

(b) Using an ohmmeter, check that there is continuity between terminals 3 and 5.

If there is no continuity, replace the relay.

4. REINSTALL EFI NO.2 RELAY

SOLENOID RESISTOR

COMPONENTS

SF0HI-01

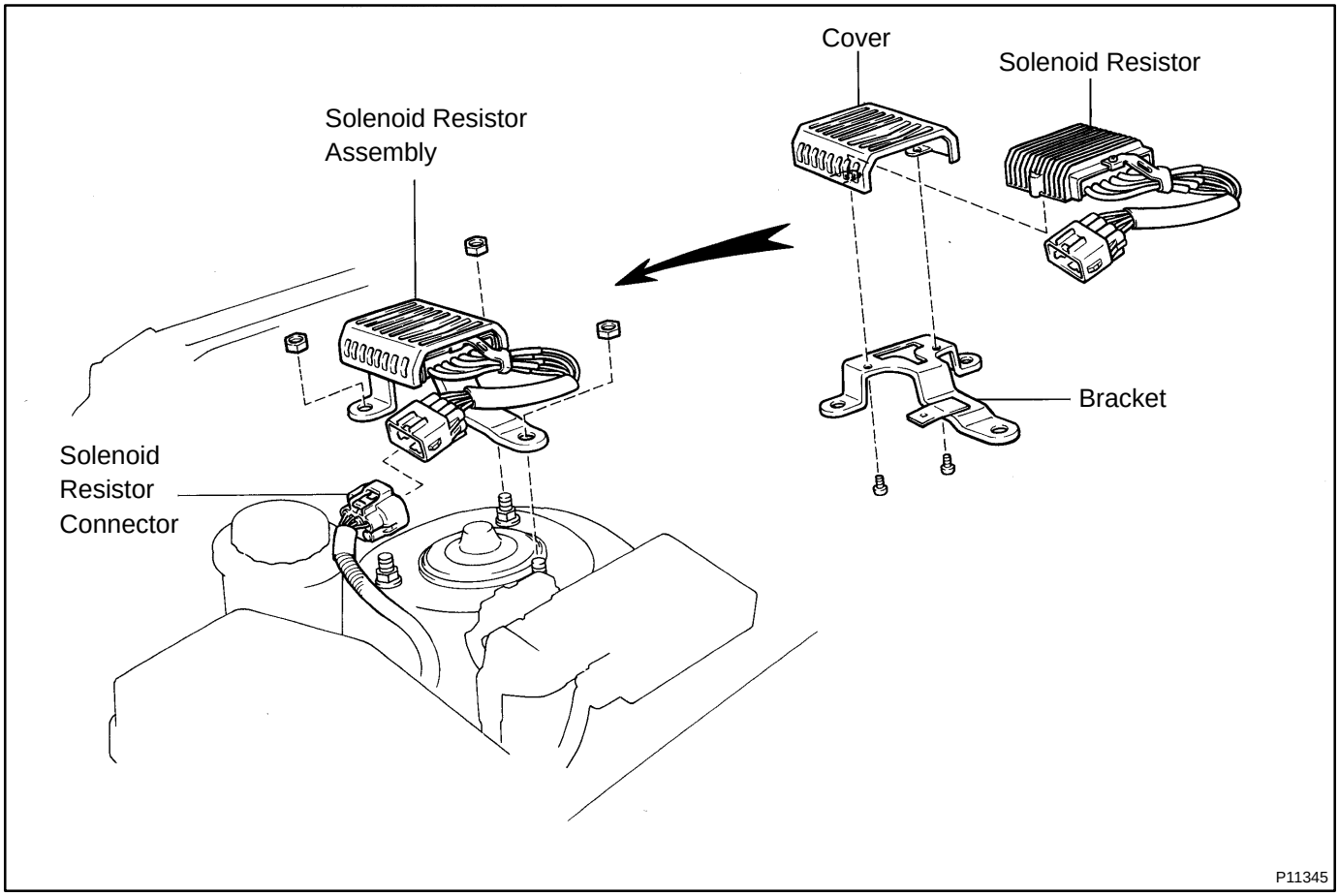

SF0HJ-01

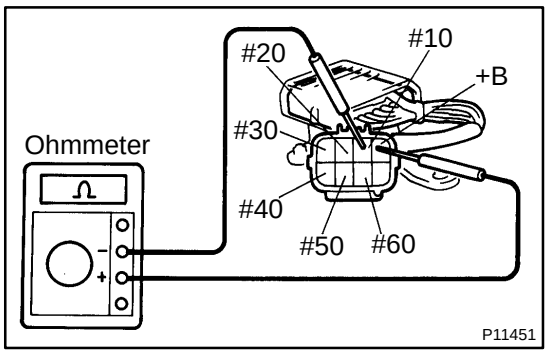

INSPECTION

1. DISCONNECT SOLENOID RESISTOR CONNECTOR

2. INSPECT SOLENOID RESISTOR

Using an ohmmeter, measure the resistance between terminal +B and other terminals.

Resistance: Approx. 6 Ω at 20˚C (68˚F)

If the resistance is not as specified, replace the resistor.

3. RECONNECT SOLENOID RESISTOR CONNECTOR

VSV FOR FUEL PRESSURE CONTROL

COMPONENTS

SF0HK-01

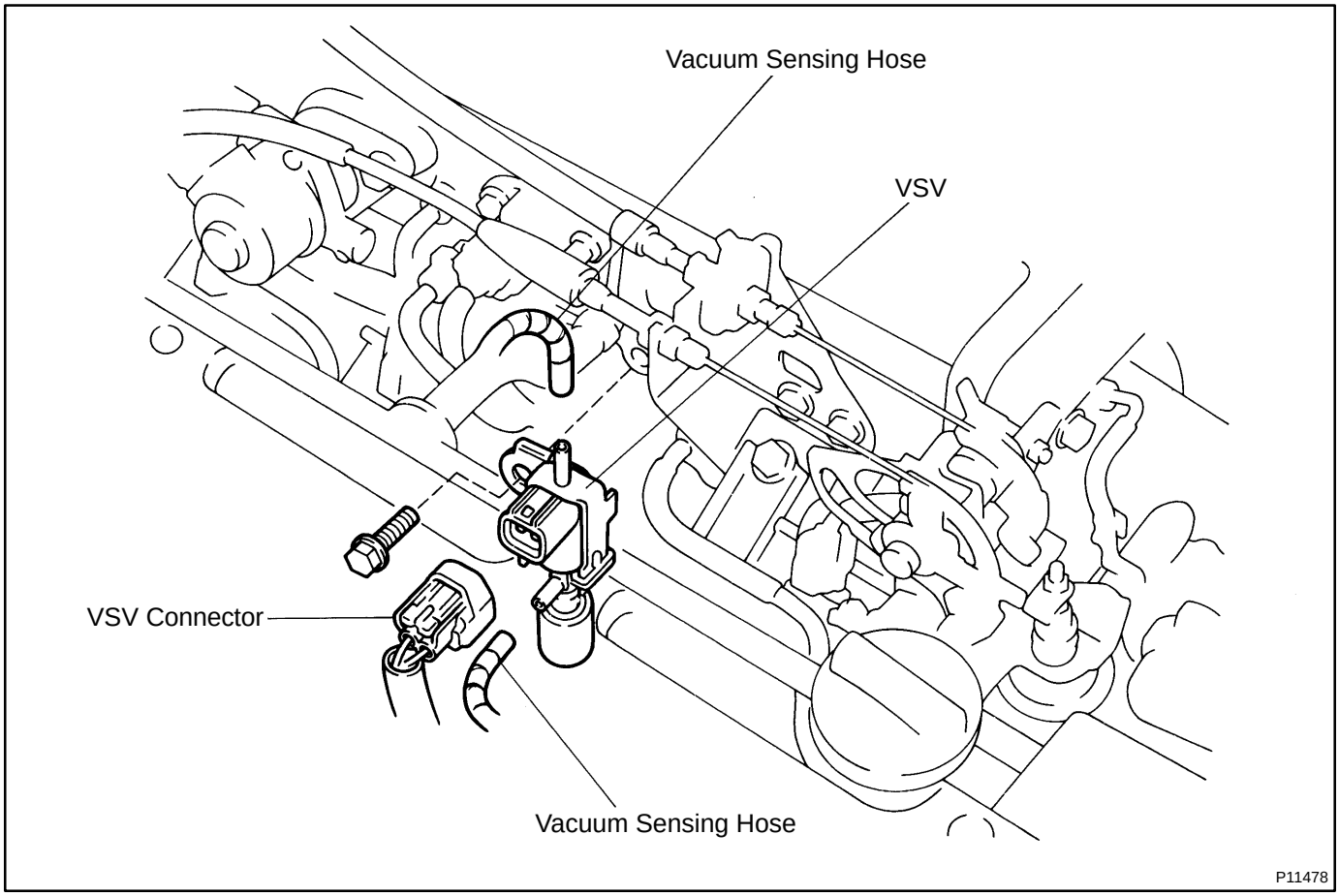

SF0HL-01

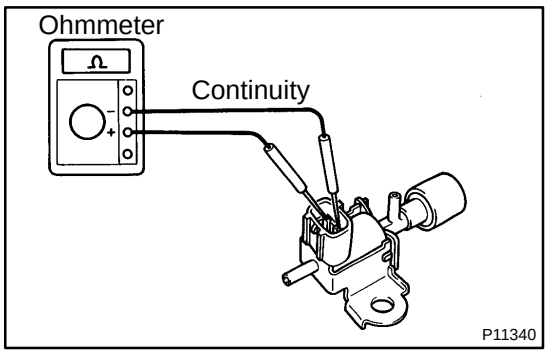

INSPECTION

1. REMOVE VSV

2. INSPECT VSV FOR OPEN CIRCUIT

Using an ohmmeter, check that there is continuity between the terminals.

Resistance: 33 - 39 Ω at 20˚C (68˚F)

If there is no continuity, replace the VSV.

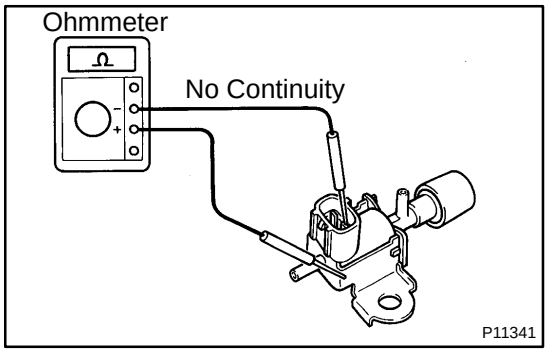

3. INSPECT VSV FOR GROUND

Using an ohmmeter, check that there is no continuity between each terminal and the body.

If there is continuity, replace the VSV.

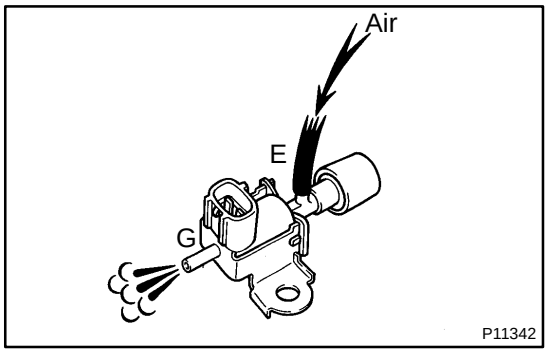

4. INSPECT VSV OPERATION

(a) Check that air flows from port E to G.

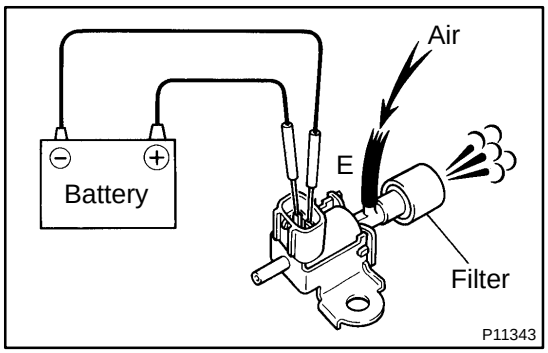

(b) Apply battery positive voltage across the terminals.

(c) Check that air flows from port E to the filter.

If operation is not as specified, replace the VSV.

5. REINSTALL VSV

VSV FOR INTAKE AIR CONTROL VALVE

COMPONENTS

SF0HM-01

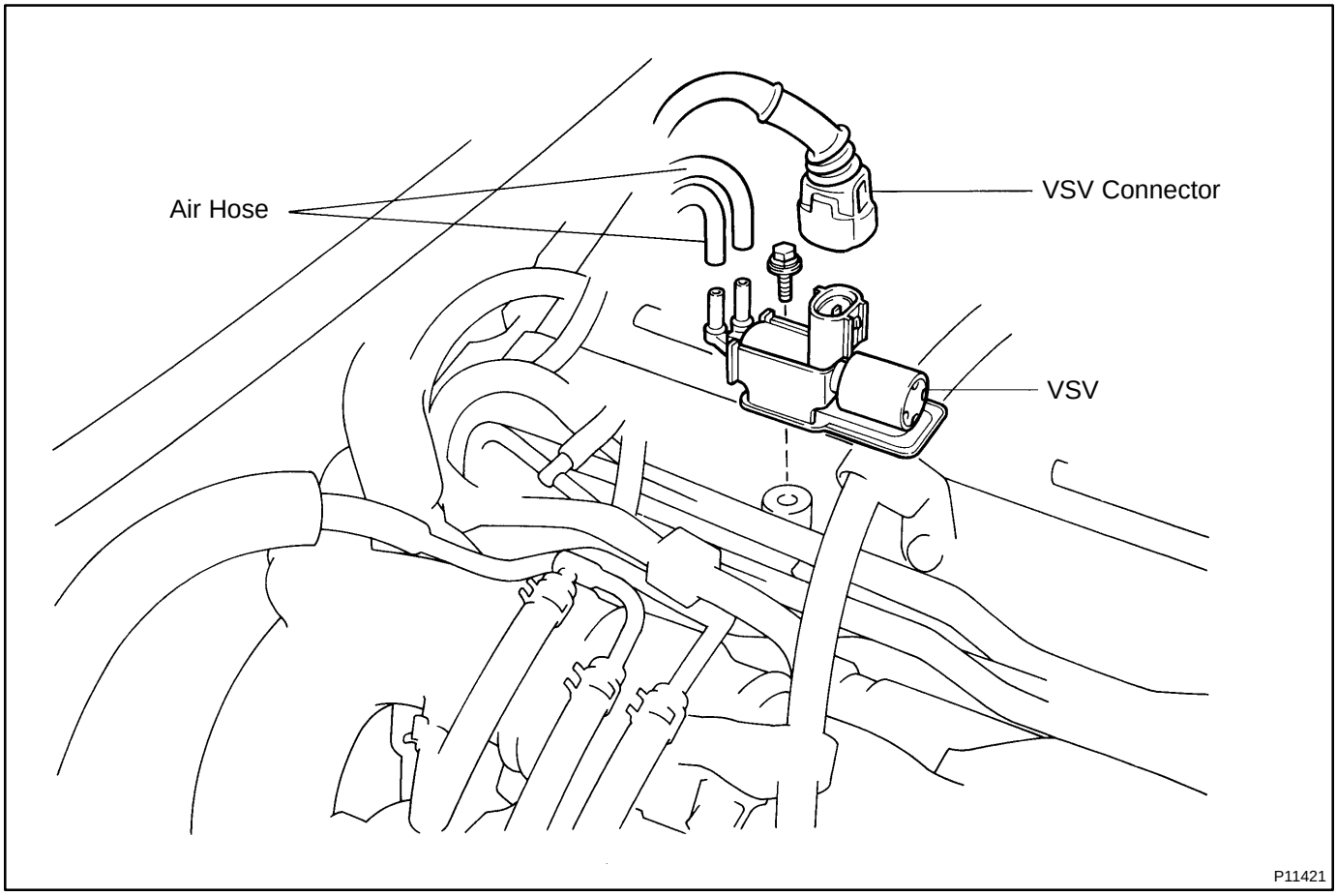

SF0HN-01

INSPECTION

1. REMOVE VSV

2. INSPECT VSV FOR OPEN CIRCUIT

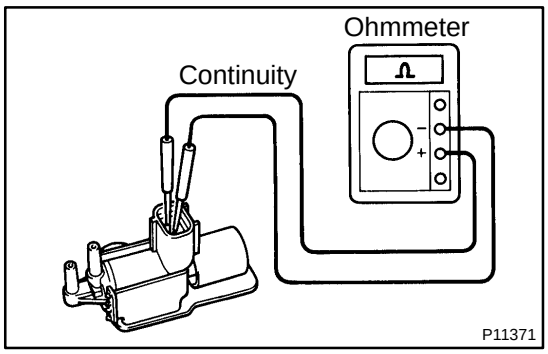

Using an ohmmeter, check that there is continuity between the terminals.

Resistance: 38.5 - 44.5 Ω at 20˚C (68˚F)

If there is no continuity, replace the VSV.

3. INSPECT VSV FOR GROUND

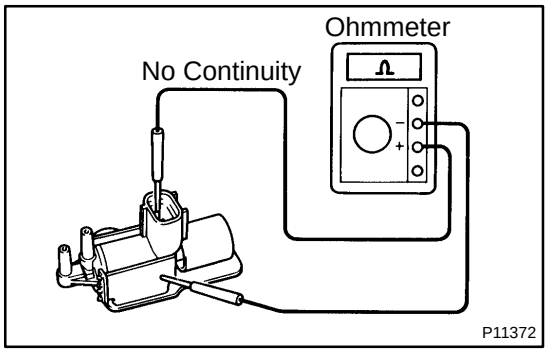

Using an ohmmeter, check that there is no continuity between each terminal and the body.

If there is continuity, replace the VSV.

4. INSPECT VSV OPERATION

(a) Check that air flows from port E to the filter.

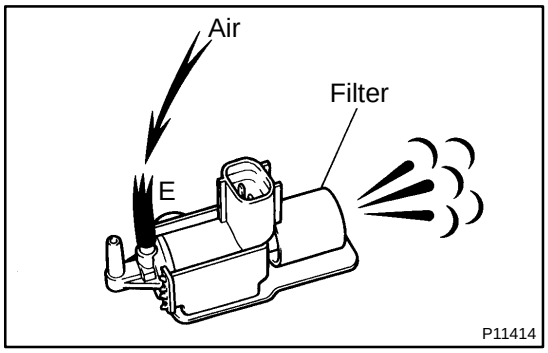

(b) Apply battery positive voltage across the terminals.

(c) Check that air flows from port E to F.

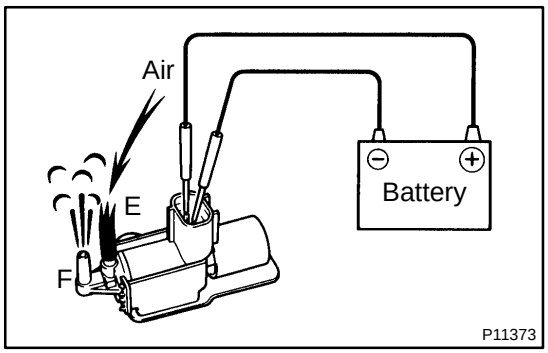

If operation is not as specified, replace the VSV.

5. REINSTALL VSV

VSV FOR WASTE GATE VALVE

COMPONENTS

SF0HO-01

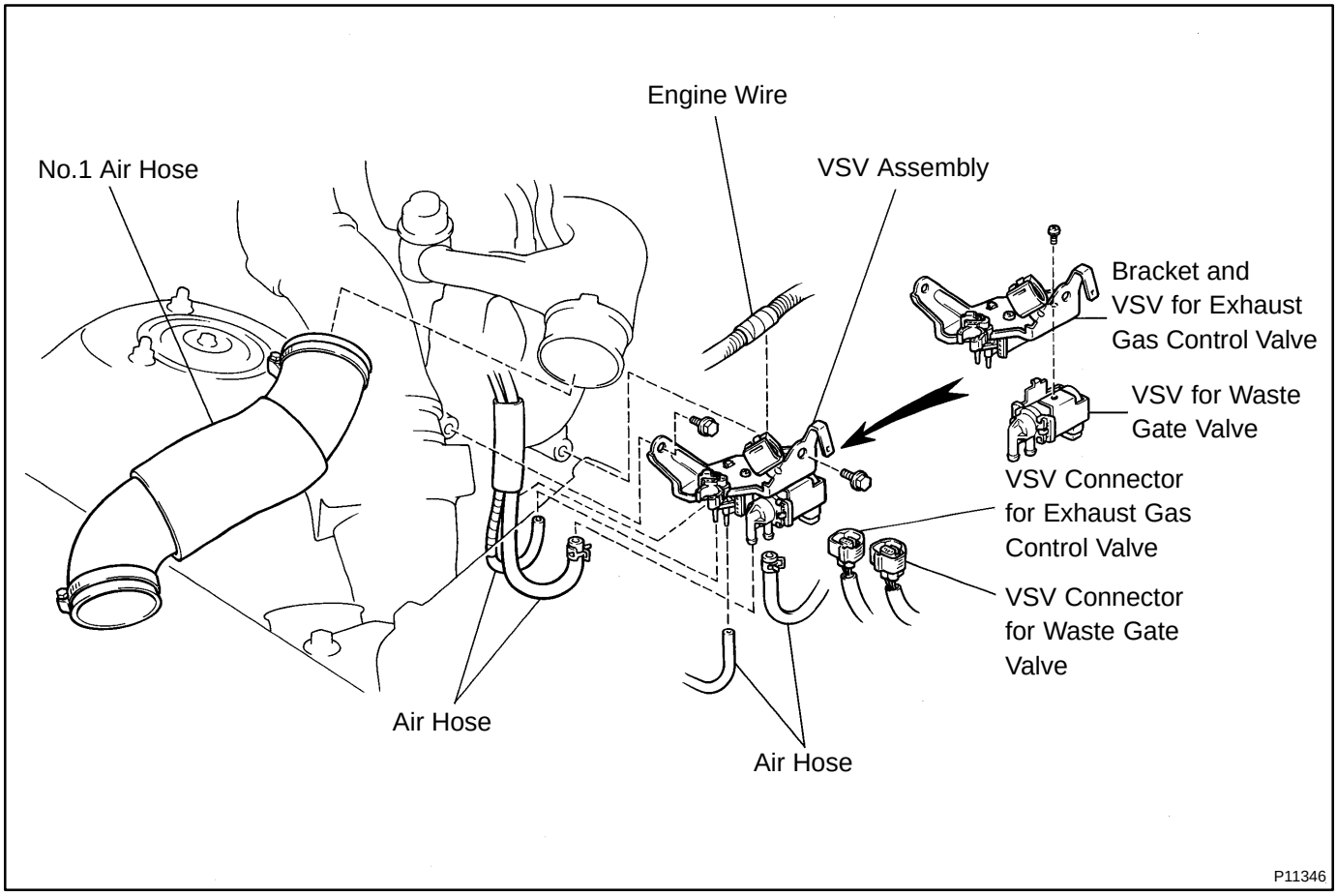

SF0HP-01

INSPECTION

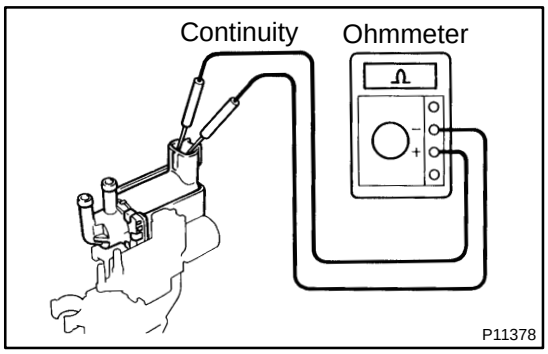

1. REMOVE VSV ASSEMBLY

2. INSPECT VSV FOR OPEN CIRCUIT

Using an ohmmeter, check that there is continuity between the terminals.

Resistance: 22 - 26 Ω at 20˚C (68˚F)

If there is no continuity, replace the VSV.

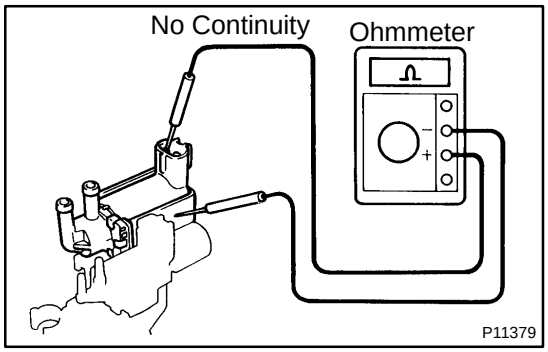

3. INSPECT VSV FOR GROUND

Using an ohmmeter, check that there is no continuity between each terminal and the body.

If there is continuity, replace the VSV.

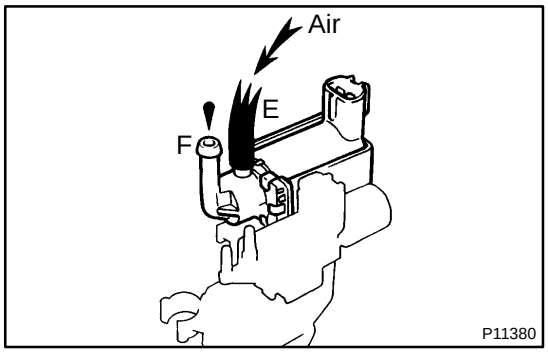

4. INSPECT VSV OPERATION

(a) Check that air does not flow from port E to F.

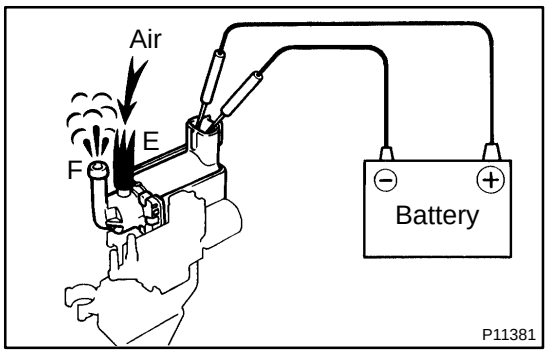

(b) Apply battery positive voltage across the terminals.

(c) Check that air flows from port E to F.

If operation is not as specified, replace the VSV.

5. REINSTALL VSV ASSEMBLY

VSV FOR EXHAUST GAS CONTROL VALVE

COMPONENTS

SF0HQ-01

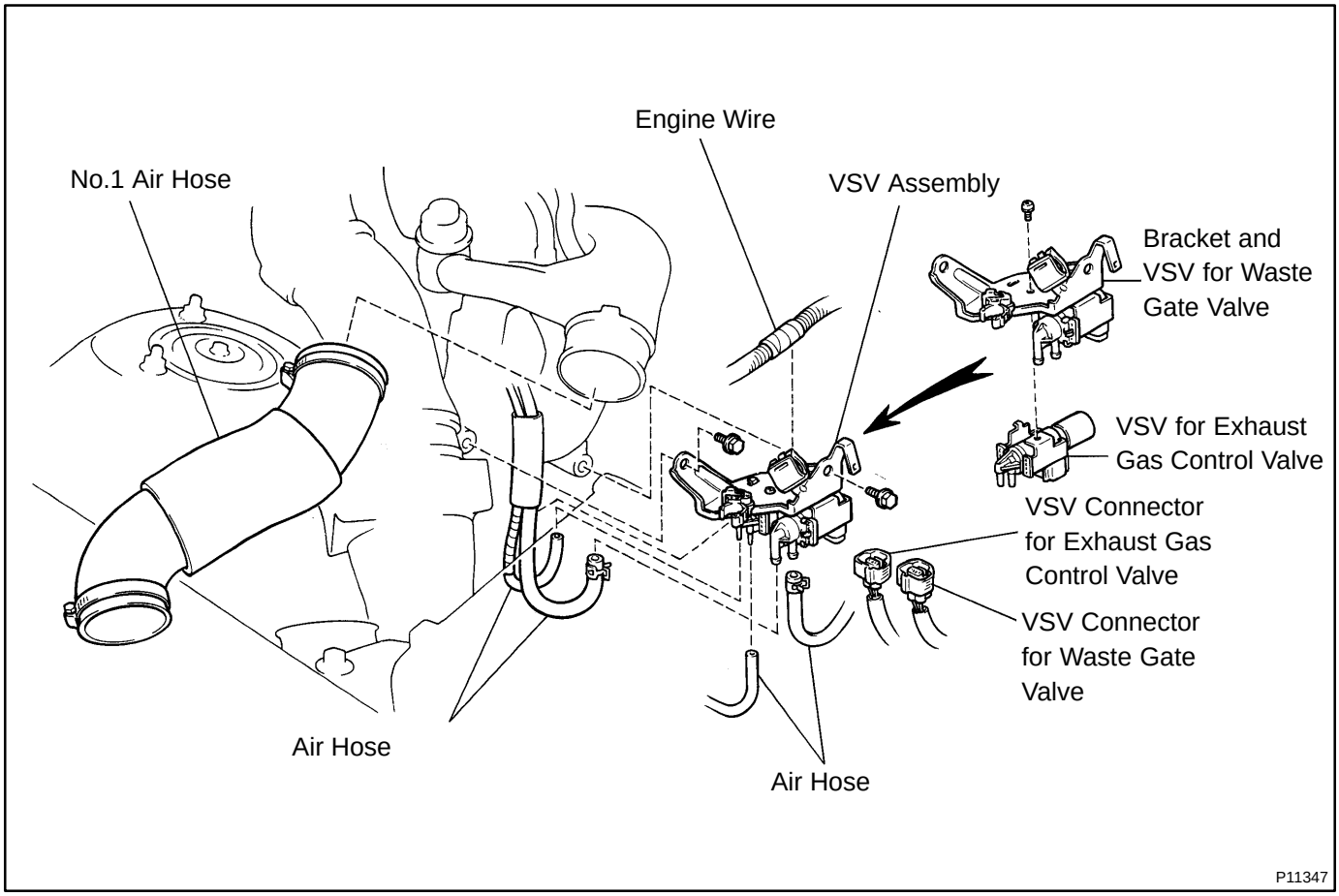

SF0HR-01

INSPECTION

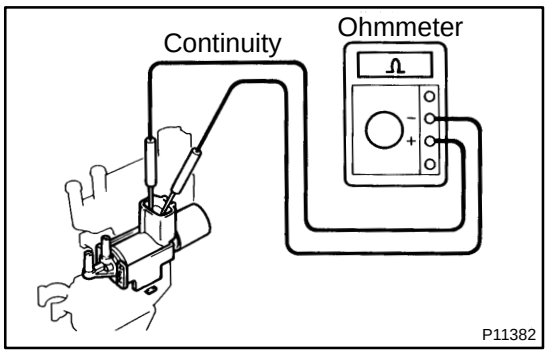

1. REMOVE VSV ASSEMBLY

2. INSPECT VSV FOR OPEN CIRCUIT

Using an ohmmeter, check that there is continuity between the terminals.

Resistance: 38.5 - 44.5 Ω at 20˚C (68˚F)

If there is no continuity, replace the VSV.

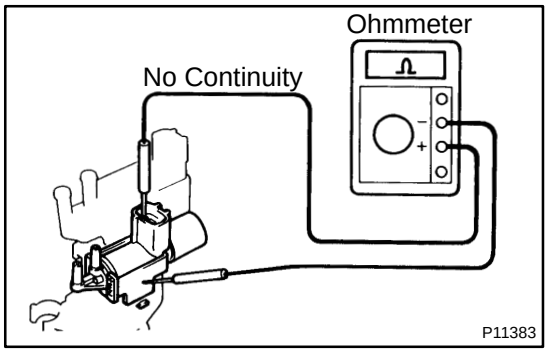

3. INSPECT VSV FOR GROUND

Using an ohmmeter, check that there is no continuity between each terminal and the body.

If there is continuity, replace the VSV.

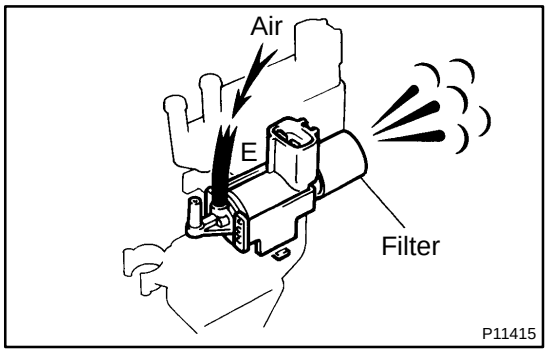

4. INSPECT VSV OPERATION

(a) Check that air flows from port E to the filter.

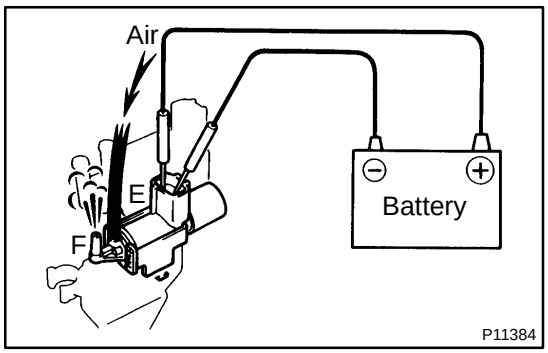

(b) Apply battery positive voltage across the terminals.

(c) Check that air flows from port E to F.

If operation is not as specified, replace the VSV.

5. REINSTALL VSV ASSEMBLY

VSV FOR EXHAUST BY-PASS VALVE

SF0HS-01

COMPONENTS

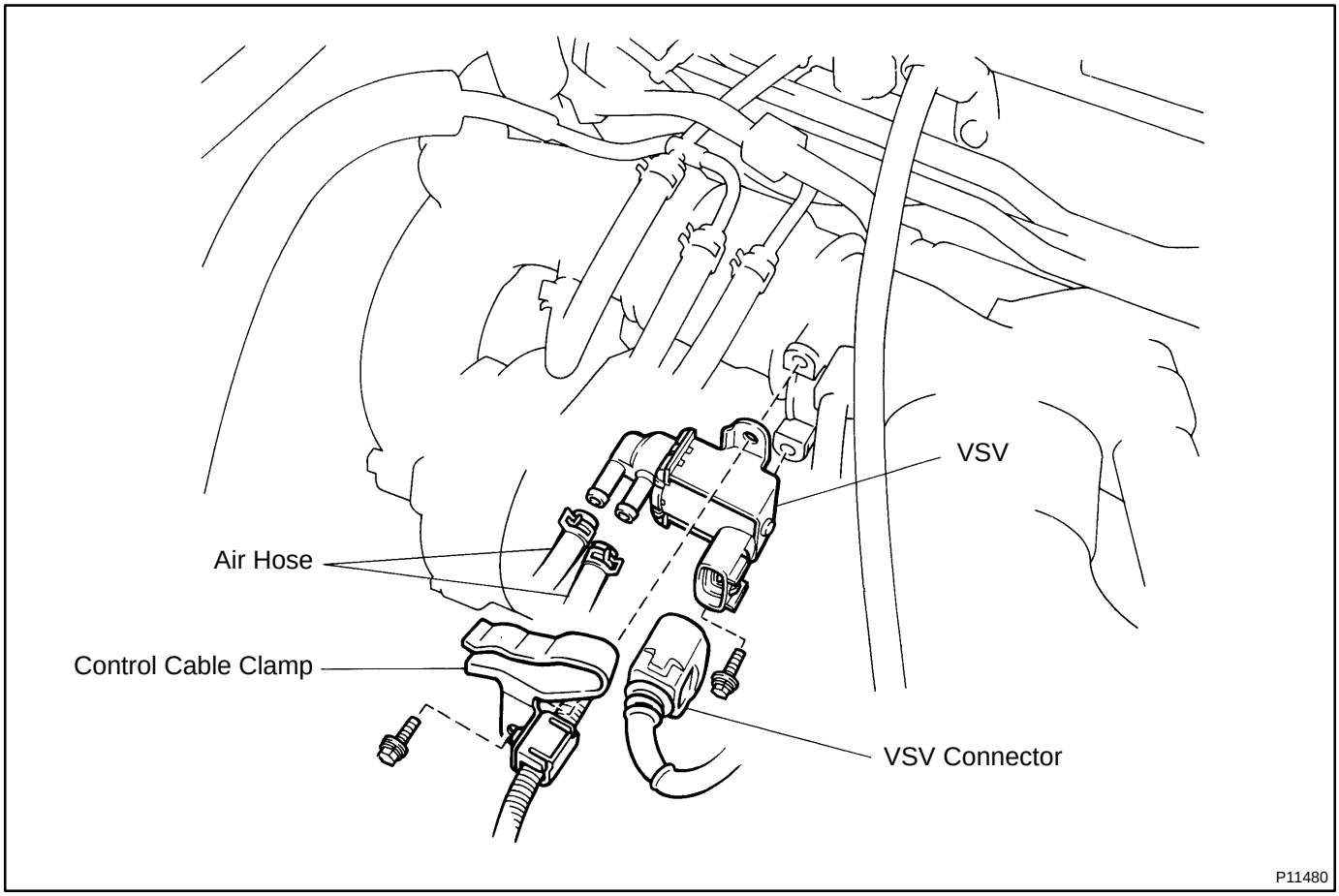

SF0HT-01

INSPECTION

1. REMOVE VSV

2. INSPECT VSV FOR OPEN CIRCUIT

Using an ohmmeter, check that there is continuity between the terminals.

Resistance: 22 - 26 Ω at 20˚C (68˚F)

If there is no continuity, replace the VSV.

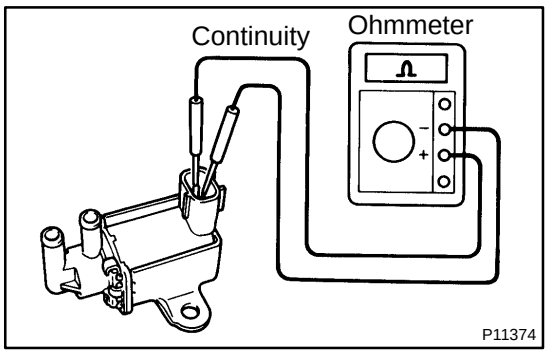

3. INSPECT VSV FOR GROUND

Using an ohmmeter, check that there is no continuity between each terminal and the body.

If there is continuity, replace the VSV.

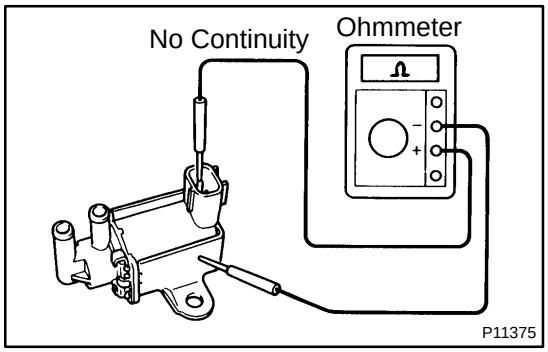

4. INSPECT VSV OPERATION

(a) Check that air does not flow from port E to F.

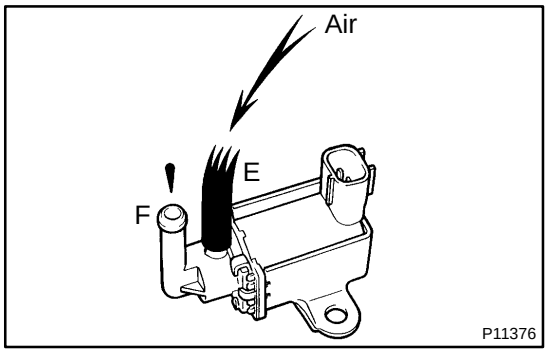

(b) Apply battery positive voltage across the terminals.

(c) Check that air flows from port E to F.

If operation is not as specified, replace the VSV.

5. REINSTALL VSV

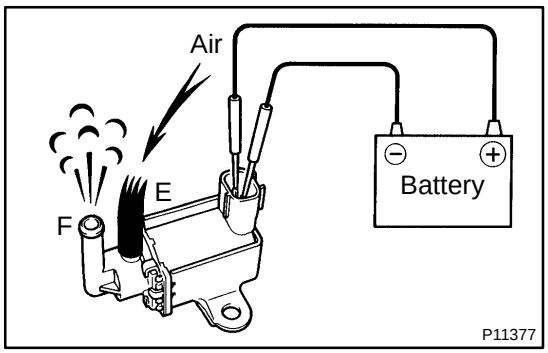

VSV FOR EXHAUST GAS RECIRCULATION (EGR)

SF0I2-01

COMPONENTS

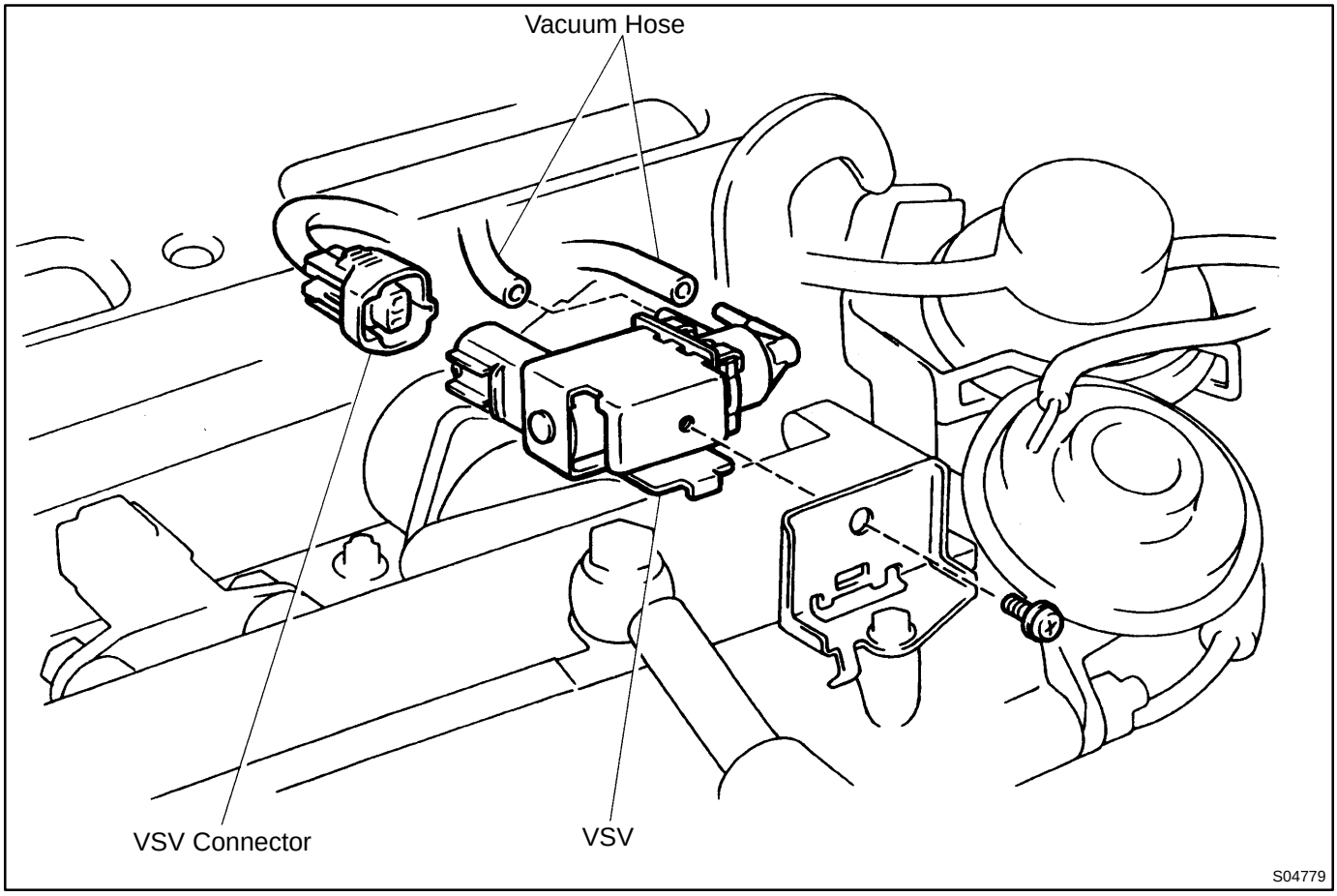

SF0I3-01

INSPECTION

1. REMOVE VSV

2. INSPECT VSV FOR OPEN CIRCUIT

Using an ohmmeter, check that there is continuity between the terminals.

Resistance: 30 - 34 Ω at 20˚C (68˚F)

If there is no continuity, replace the VSV.

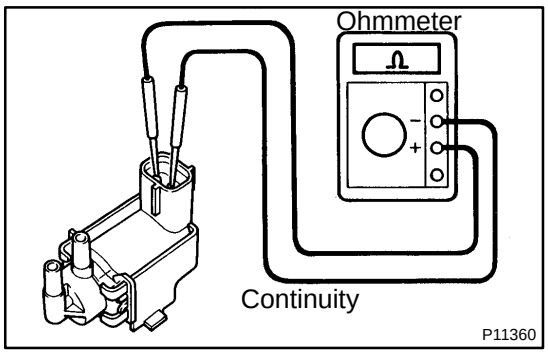

3. INSPECT VSV FOR GROUND

Using an ohmmeter, check that there is no continuity between each terminal and the body.

If there is continuity, replace the VSV.

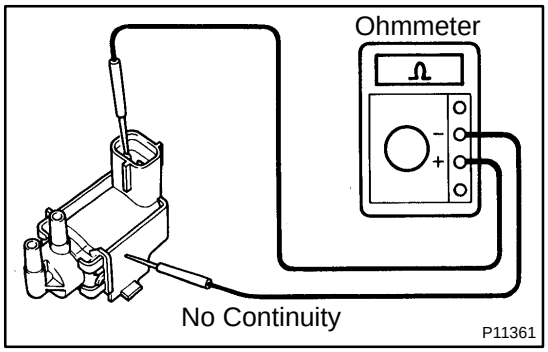

4. INSPECT VSV OPERATION

(a) Check that air does not flow from port E to F.

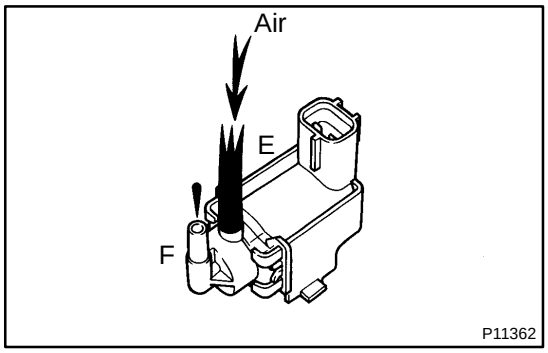

(b) Apply battery positive voltage across the terminals.

(c) Check that air flows from port E to F.

If operation is not as specified, replace the VSV.

5. REINSTALL VSV

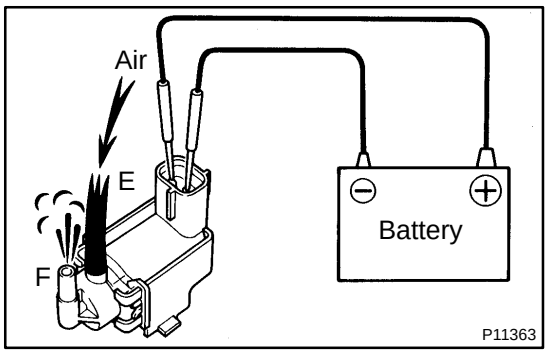

VSV FOR EVAPORATIVE EMISSION (EVAP)

COMPONENTS

SF0HX-01

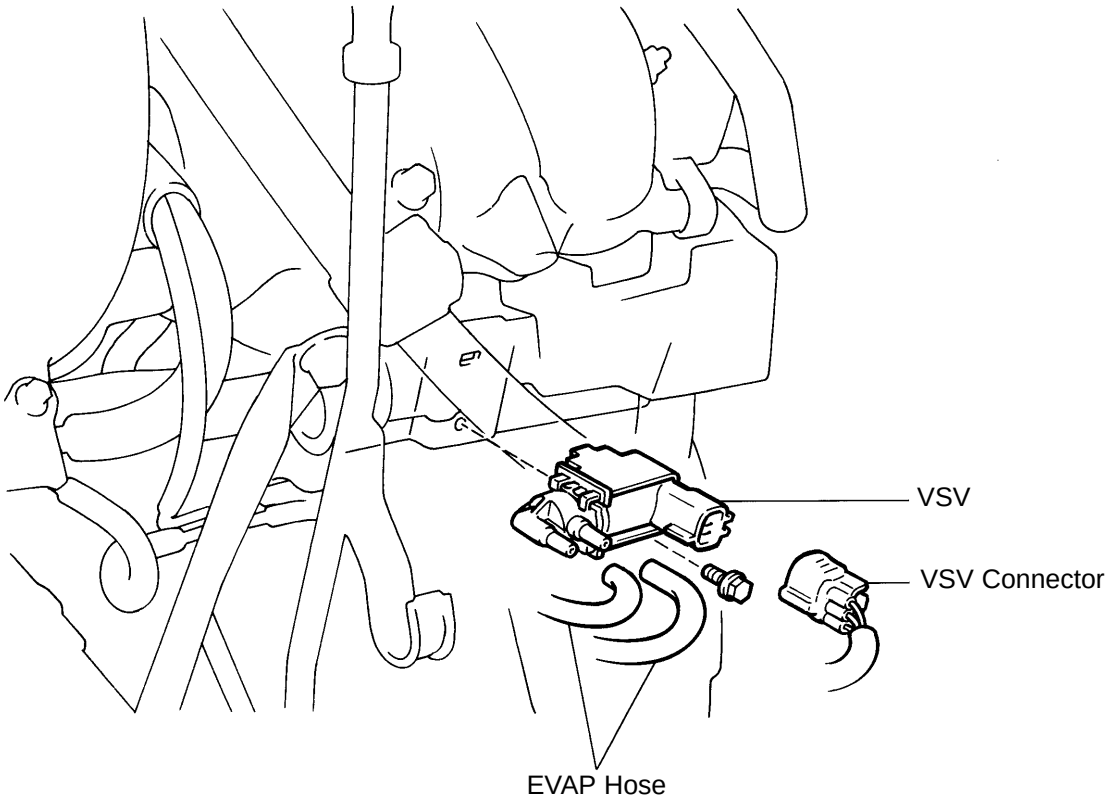

P11407

SF0HW-01

INSPECTION

1. REMOVE VSV

2. INSPECT VSV FOR OPEN CIRCUIT

Using an ohmmeter, check that there is continuity between the terminals.

Resistance: 30 - 34 Ω at 20˚C (68˚F)

If there is no continuity, replace the VSV.

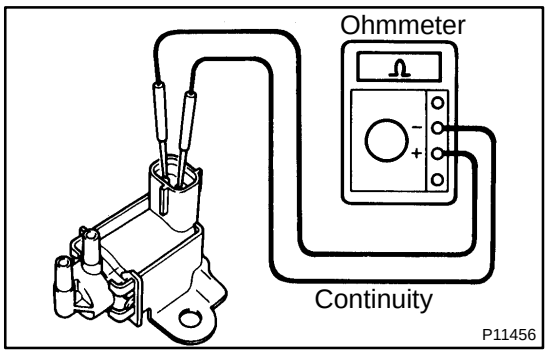

3. INSPECT VSV FOR GROUND

Using an ohmmeter, check that there is no continuity between each terminal and the body.

If there is continuity, replace the VSV.

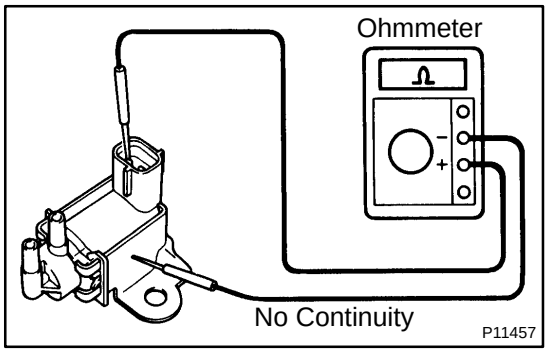

4. INSPECT VSV OPERATION

(a) Check that air does not flow from port E to F.

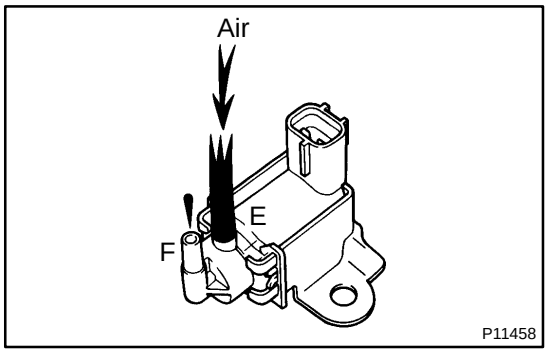

(b) Apply battery positive voltage across the terminals.

(c) Check that air flows from port E to F.

If operation is not as specified, replace the VSV.

5. REINSTALL VSV

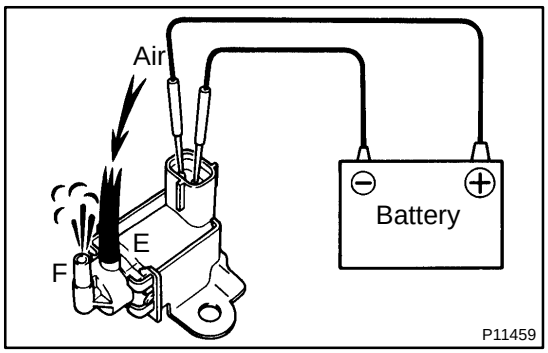

ENGINE COOLANT TEMPERATURE (ECT) SENSOR

COMPONENTS

SF0HY-01

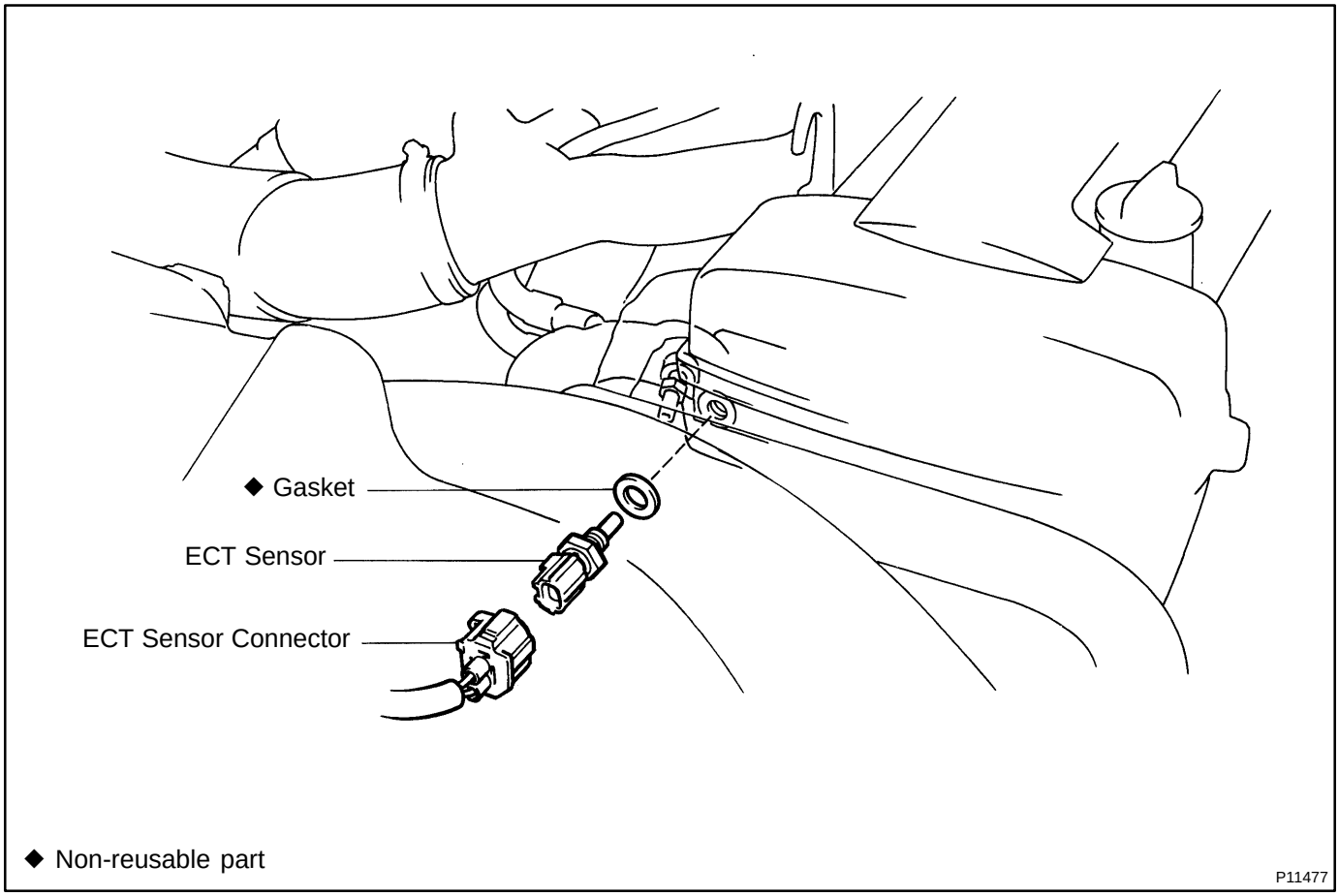

SF0HZ-01

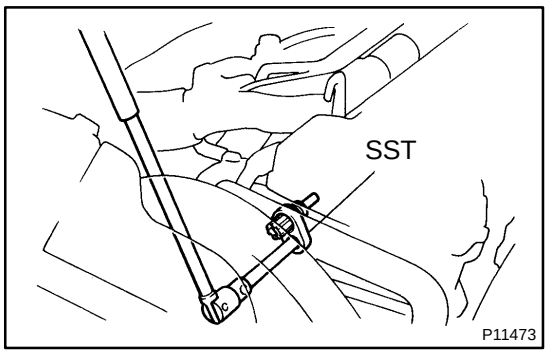

INSPECTION

1. DRAIN ENGINE COOLANT

2. REMOVE ECT SENSOR

(a) Disconnect the ECT sensor connector.

(b) Using SST, remove the ECT sensor and gasket.
SST 09205-76030

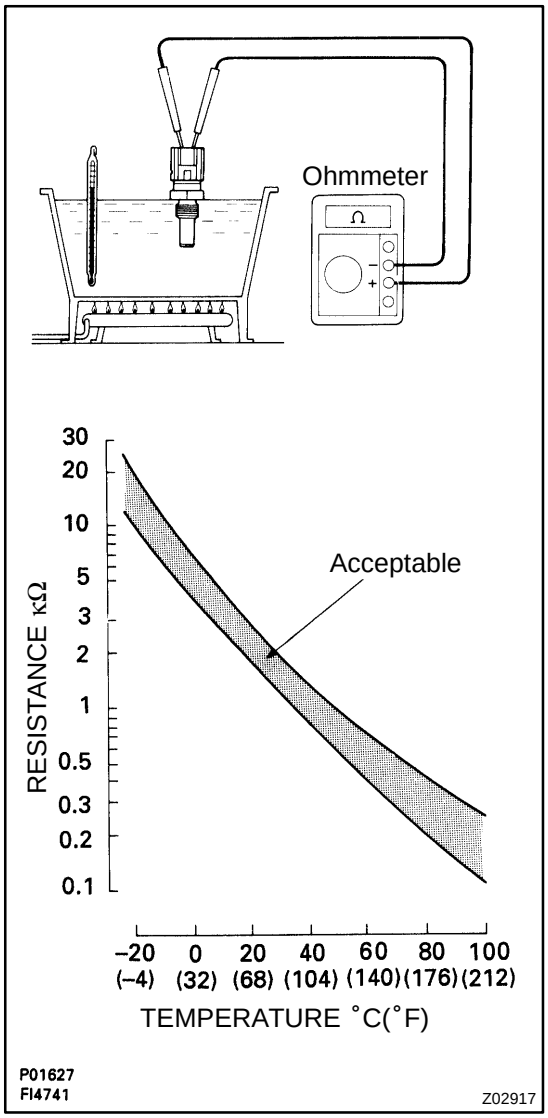

3. INSPECT ECT SENSOR

Using an ohmmeter, measure the resistance between the terminals.

Resistance: Refer to the graph

If the resistance is not as specified, replace the ECT sensor.

4. REINSTALL ECT SENSOR

(a) Install a new gasket to the ECT sensor.

(b) Using SST, install the ECT sensor.
SST 09205-76030

(c) Connect the ECT sensor connector.

5. REFILL WITH ENGINE COOLANT

KNOCK SENSOR

COMPONENTS

SF0I0-01

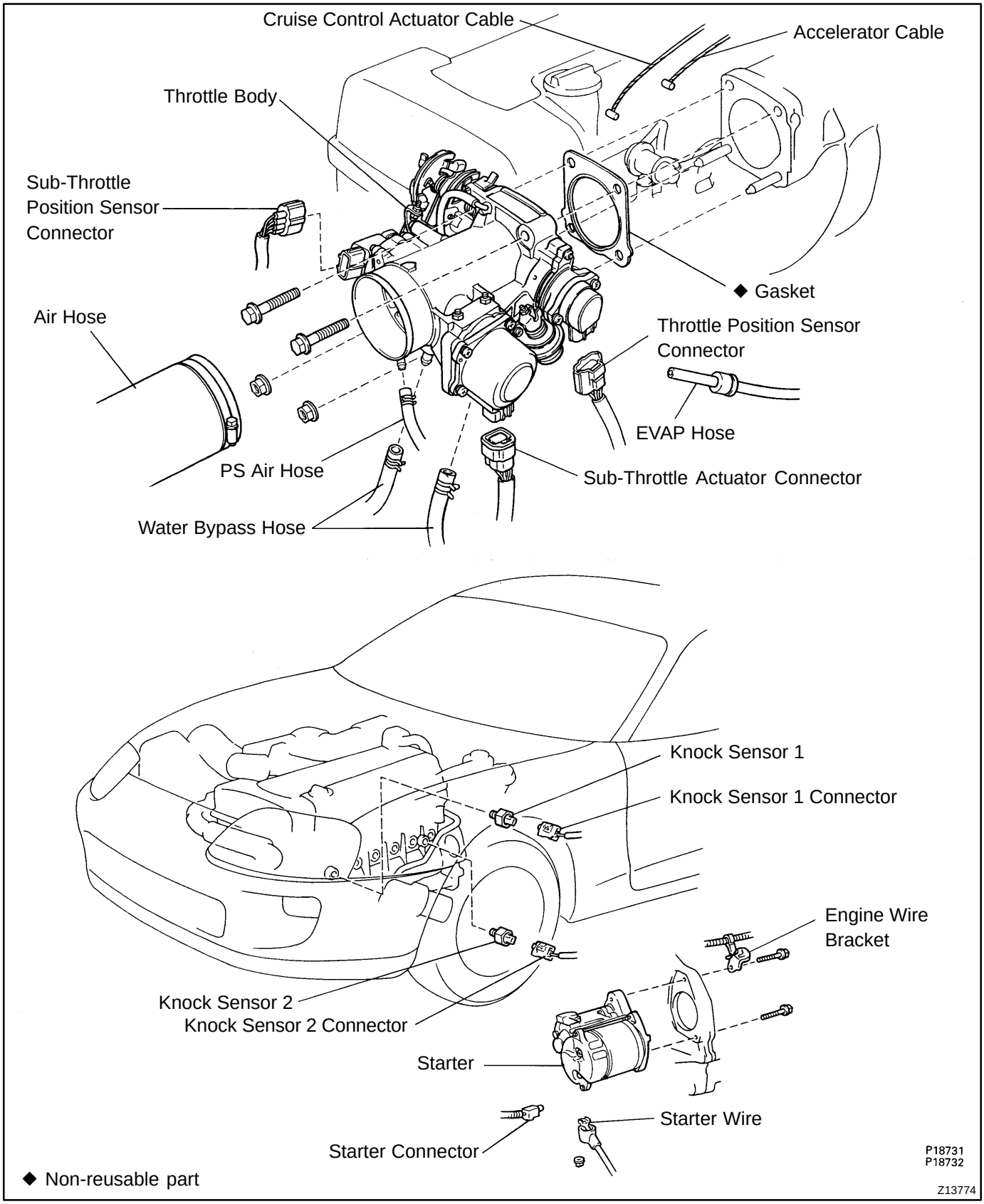

SF0I1-01

INSPECTION

1. **REMOVE THROTTLE BODY**
   (See page SF-43)
2. **REMOVE STARTER**
   (See page ST-4)

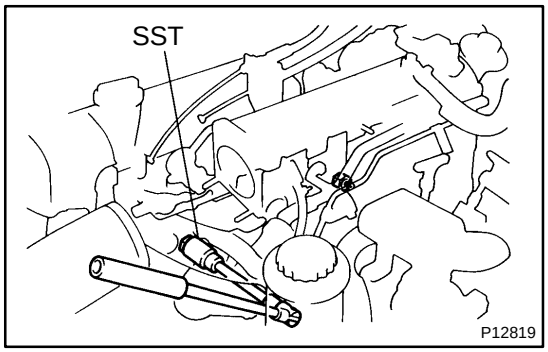

3. **REMOVE KNOCK SENSORS**

(a) Disconnect the knock sensor connector.

(b) Using SST, remove the knock sensor.
SST 09816-30010

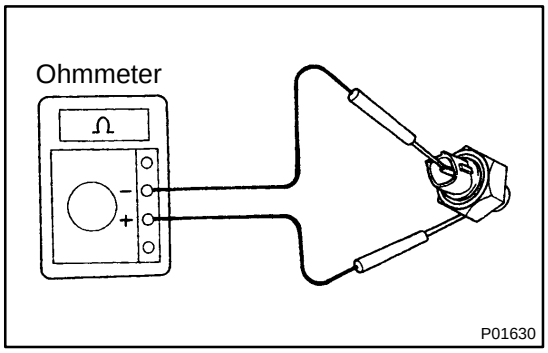

4. **INSPECT KNOCK SENSORS**

Using an ohmmeter, check that there is no continuity between the terminal and body.
If there is continuity, replace the sensor.

5. **REINSTALL KNOCK SENSORS**

(a) Using SST, install the knock sensor.
SST 09816-30010
Torque: 44 N·m (450 kgf·cm, 33 ft·lbf)

(b) Connect the knock sensor connector.

6. **REINSTALL STARTER**
   (See page ST-15)
7. **REINSTALL THROTTLE BODY**
   (See page SF-48)

EXHAUST GAS RECIRCULATION (EGR) GAS TEMPERATURE SENSOR

SF0HU-01

COMPONENTS

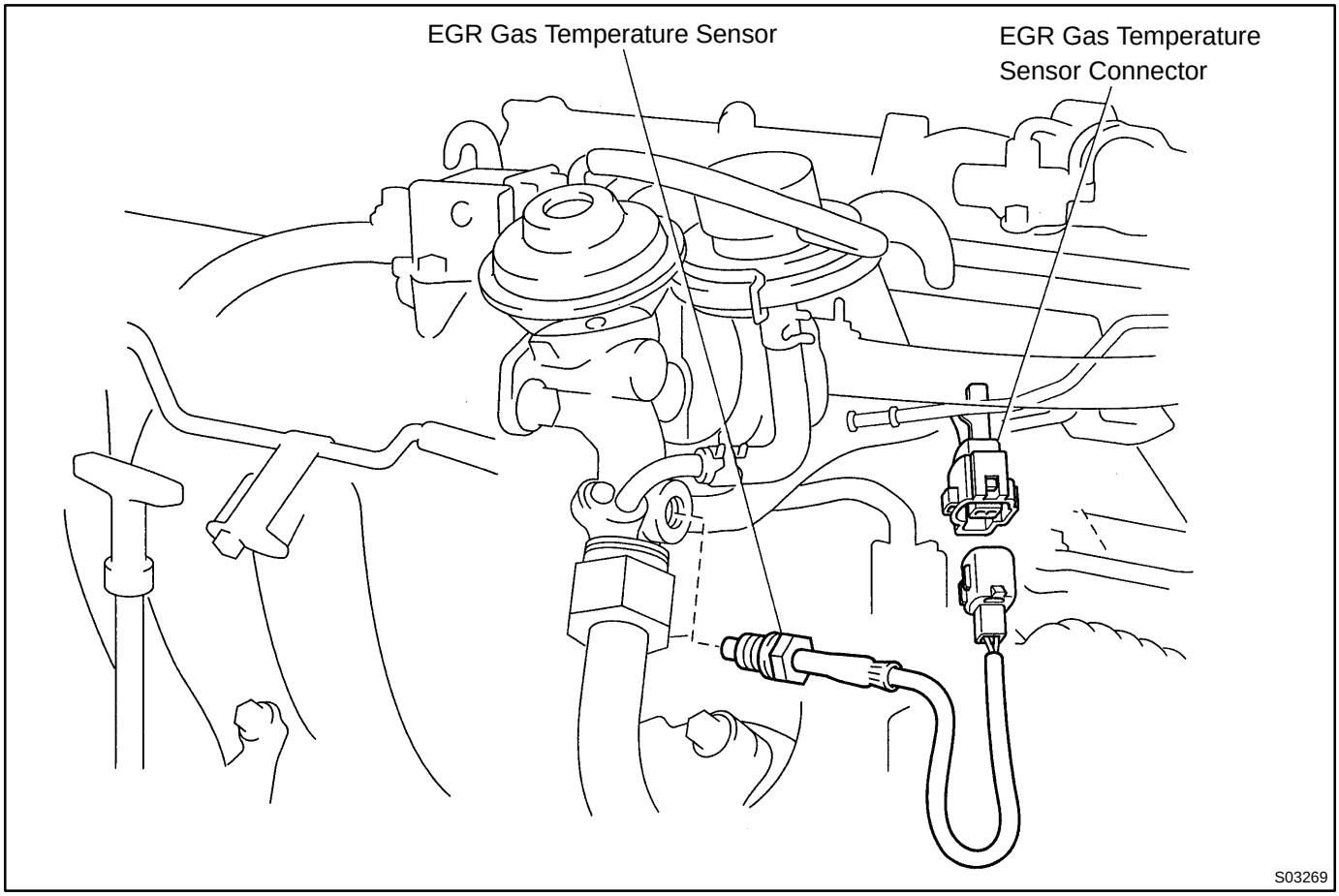

SF0HV-01

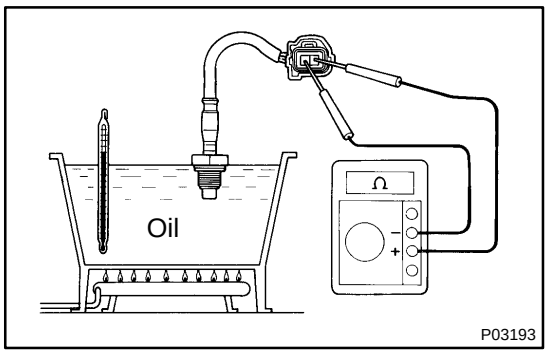

INSPECTION

1. REMOVE EGR GAS TEMPERATURE SENSOR

2. INSPECT EGR GAS TEMPERATURE SENSOR

Using an ohmmeter, measure the resistance between the terminals.

Resistance:

At 50˚C (122˚F)	64 - 97 kΩ
At 100˚C (212˚F)	11 - 16 kΩ
At 150˚C (302˚F)	2 - 4 kΩ

If the resistance is not as specified, replace the sensor.

Torque: 20 N·m (200 kgf·cm, 14 ft·lbf)

3. REINSTALL EGR GAS TEMPERATURE SENSOR

TURBO PRESSURE SENSOR

SF0I4-01

COMPONENTS

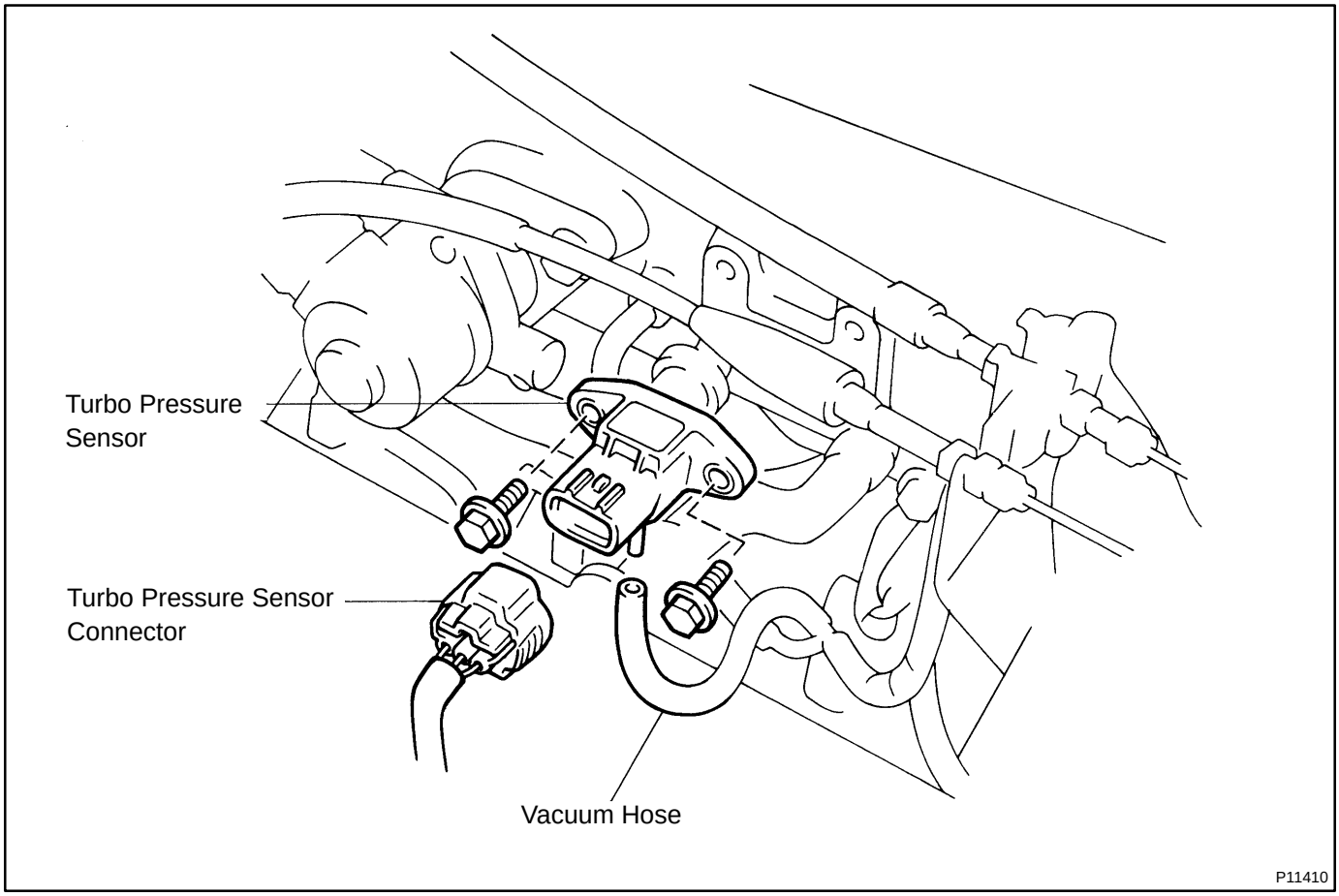

SF0I5-01

INSPECTION

1. INSPECT POWER SOURCE VOLTAGE OF TURBO PRESSURE SENSOR

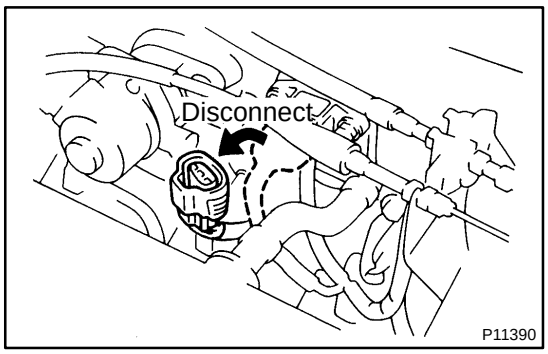

(a) Disconnect the turbo pressure sensor connector.

(b) Turn the ignition switch ON.

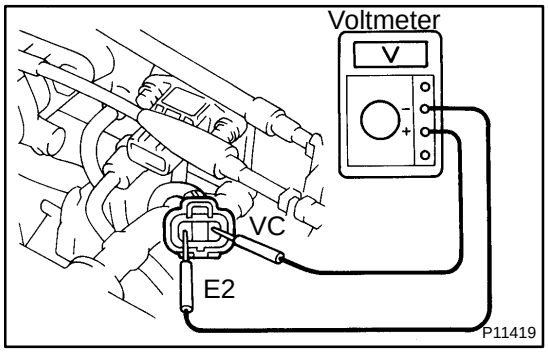

(c) Using a voltmeter, measure the voltage between connector terminals VC and E2 of the wiring harness side.
Voltage: 4.5 - 5.5 V

(d) Turn the ignition switch OFF.

(e) Reconnect the turbo pressure sensor connector.

2. INSPECT SUPPLY POWER OF TURBO PRESSURE SENSOR

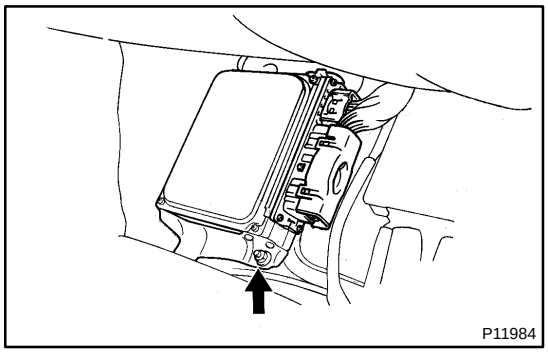

(a) Disconnect the ECM from the ECU bracket.
(See page SF-86)

(b) Install SST (check harness) between the ECM and wiring connectors.
(See page DI-164)
SST 09990-01000

(c) Turn the ignition switch ON.

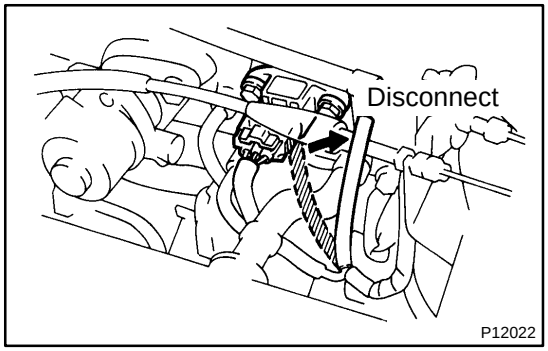

(d) Disconnect the vacuum hose from the turbo pressure sensor.

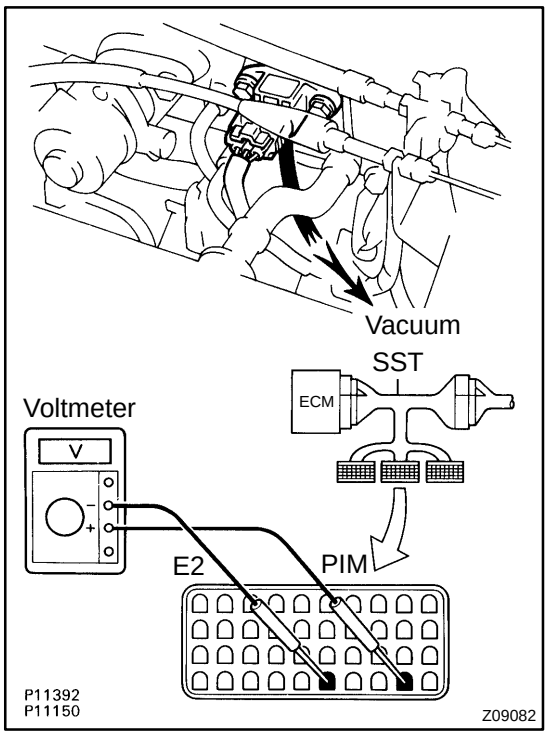

(e) Connect a voltmeter to terminals PIM and E2 of the ECM, and measure the output voltage under ambient atmospheric pressure.

(f) Apply vacuum to the turbo pressure sensor in 13.3 kPa (100 mmHg, 3.94 in.Hg) segments to 66.7 kPa (500 mmHg, 19.69 in.Hg).

(g) Measure the voltage drop from step (c) above for each segment.

Voltage drop:

Applied Vacuum kPa (mmHg, in. Hg.)	13.3 (100, 3.94)	26.7 (200, 7.87)	40.0 (300, 11.81)	53.3 (400, 15.75)	66.7 (500, 19.69)
Voltage drop V	0.15 - 0.35	0.4 - 0.6	0.65 - 0.85	0.9 - 1.1	1.15 - 1.35

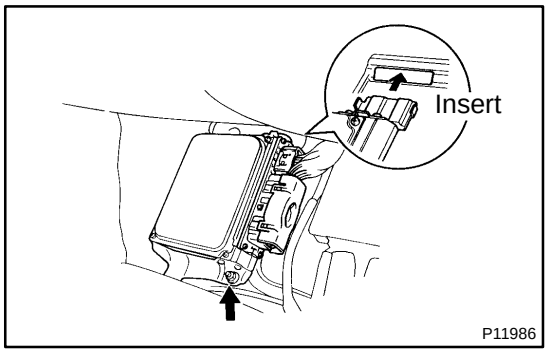

(h) Remove the SST.
SST 09990-01000

(i) Reinstall the ECM. (See page SF-86)

(j) Reconnect the vacuum hose to the turbo pressure sensor.

HEATED OXYGEN SENSOR

SF0I6-01

COMPONENTS

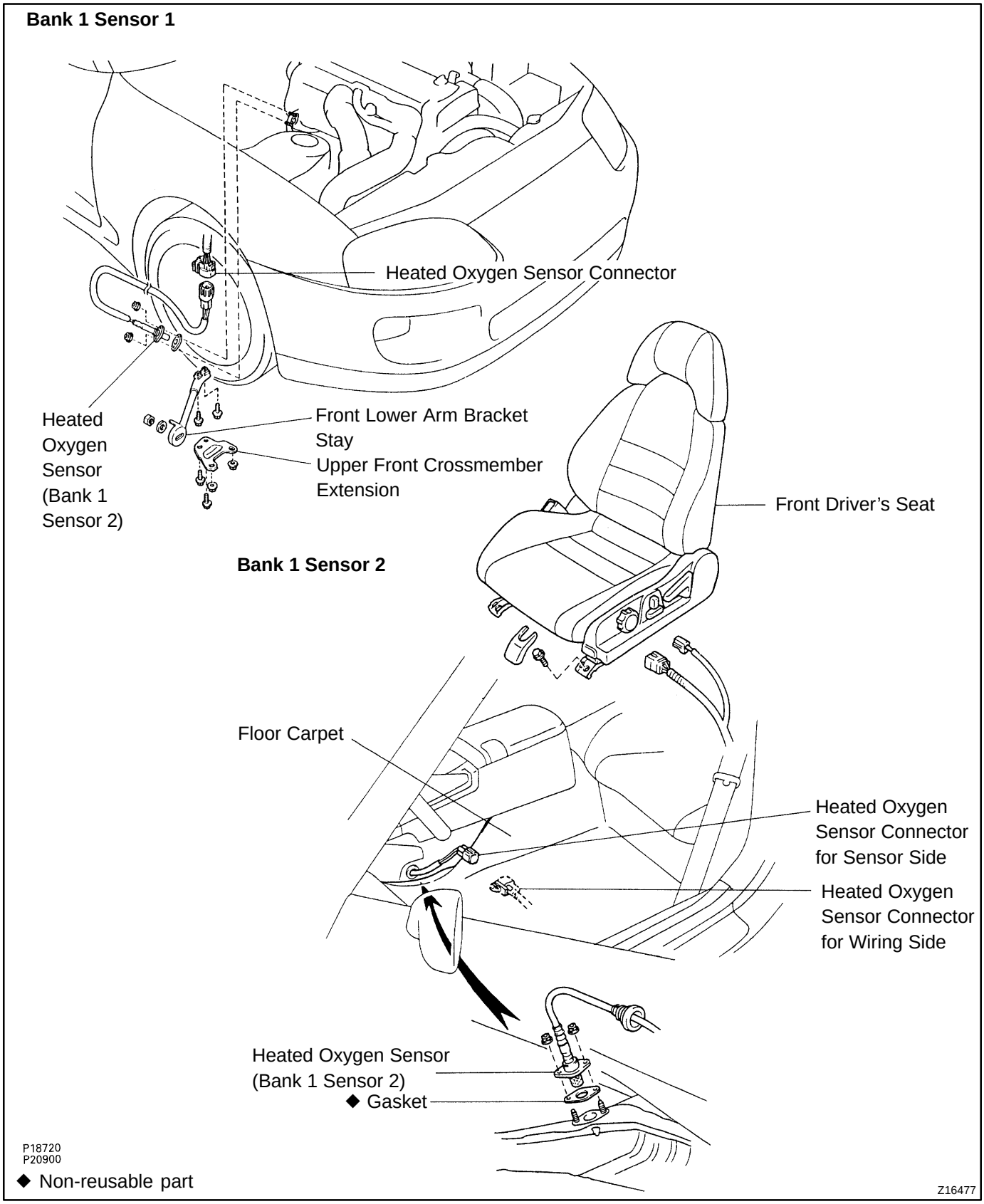

SF0I7-01

INSPECTION

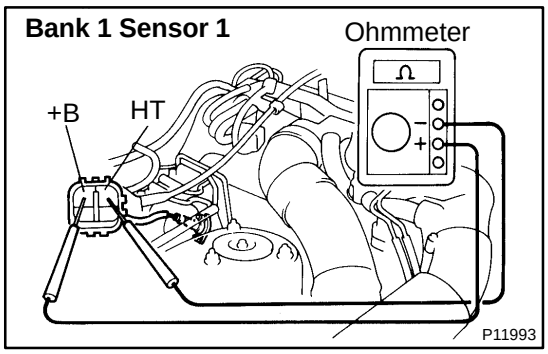

1. INSPECT HEATER RESISTANCE OF HEATED OXYGEN SENSOR (BANK 1 SENSOR 1)

(a) Disconnect the oxygen sensor connector.

(b) Using an ohmmeter, measure the resistance between the terminals +B and HT.

Resistance: 11 - 16 Ω at 20˚C (68˚F)

If the resistance is not as specified, replace the sensor.

Torque: 20 N·m (200 kgf·cm, 14 ft·lbf)

(c) Reconnect the oxygen sensor connector.

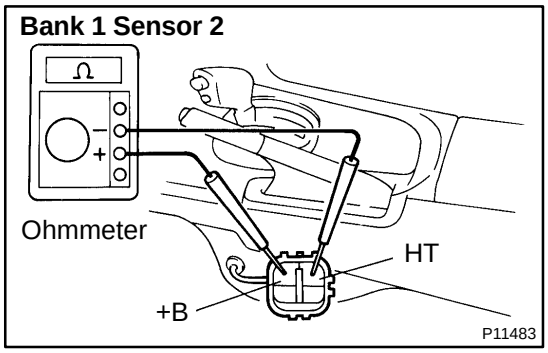

2. INSPECT HEATER RESISTANCE OF HEATED OXYGEN SENSOR (BANK 1 SENSOR 2)

(a) Remove the driver's seat.

(b) Take out the console box side of the floor carpet.

(c) Disconnect the oxygen sensor connector.

(d) Using an ohmmeter, measure the resistance between the terminals +B and HT.

Resistance: 11 - 16 Ω at 20˚C (68˚F)

If the resistance is not as specified, replace the sensor.

Torque: 20 N·m (200 kgf·cm, 14 ft·lbf)

(e) Reconnect the oxygen sensor connector.

(f) Reinstall the floor carpet.

(g) Reinstall the driver's seat.

FUEL PUMP ECU

COMPONENTS

SF0I8-01

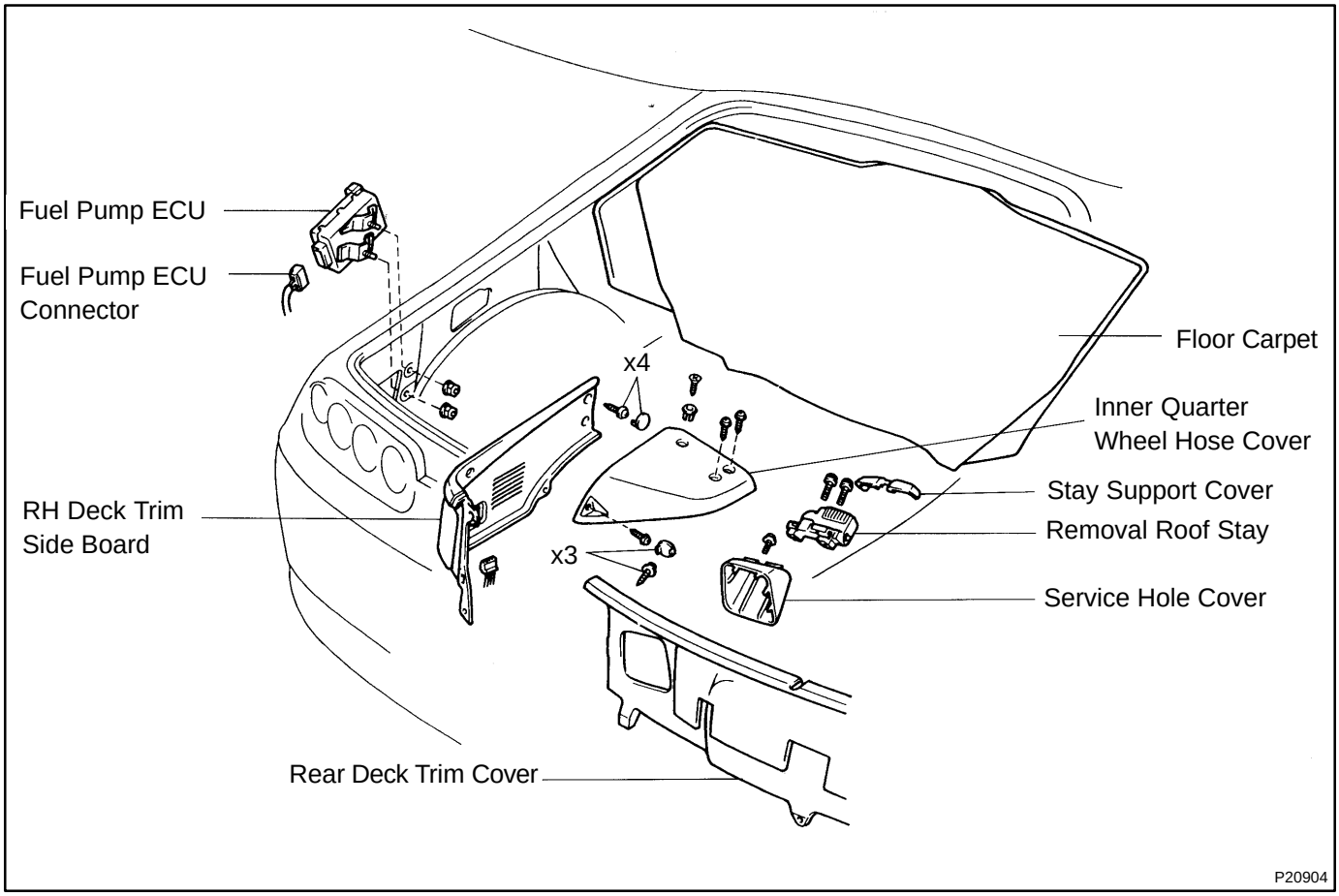

ENGINE CONTROL MODULE (ECM)

SF0IA-01

COMPONENTS

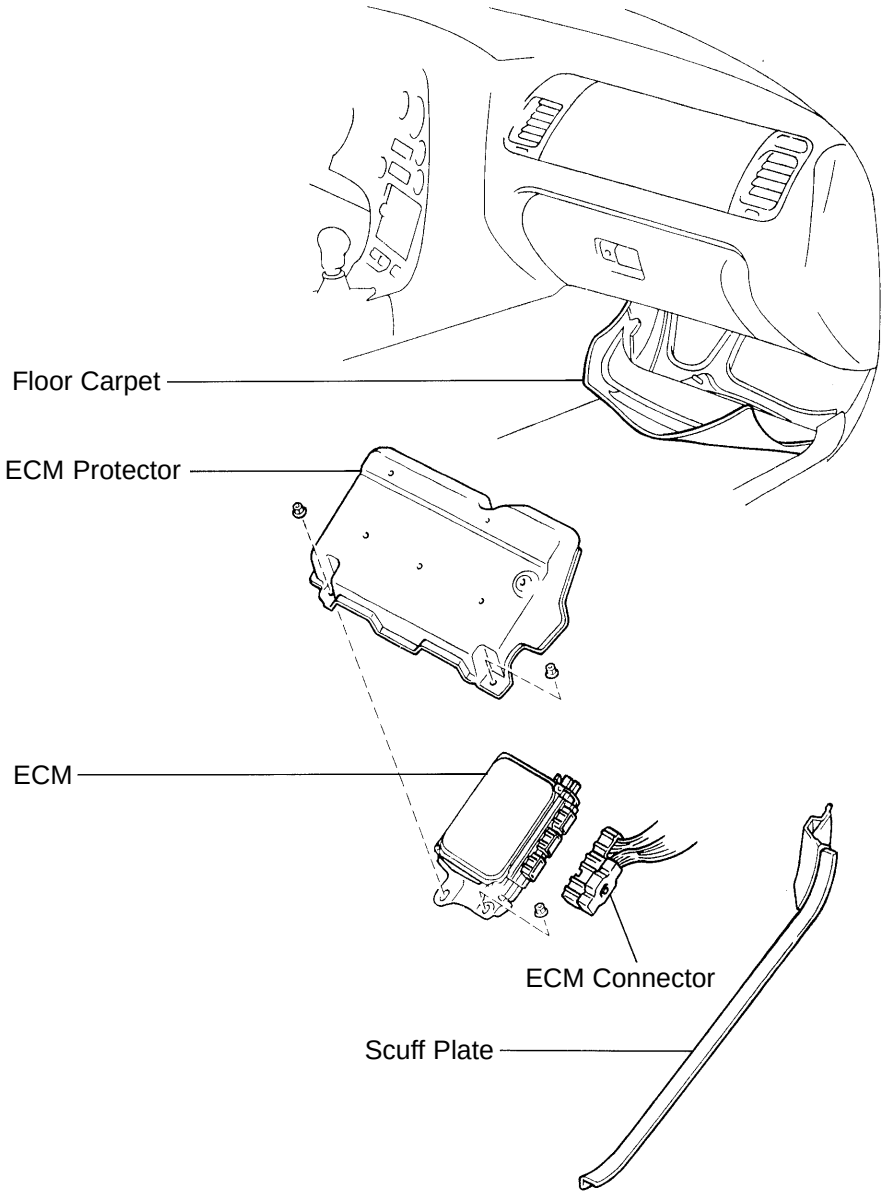

P18719

Z16615

SF0IB-01

INSPECTION

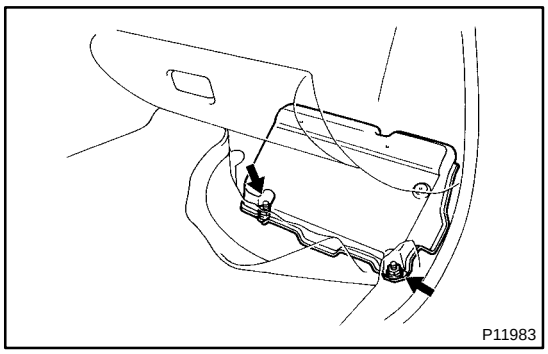

1. **DISCONNECT NEGATIVE (-) TERMINAL CABLE FROM BATTERY**
2. **REMOVE SCUFF PLATE**
3. **REMOVE ECM PROTECTOR**

(a) Take out the front side of the floor carpet.

(b) Remove the 2 nuts and ECM protector.

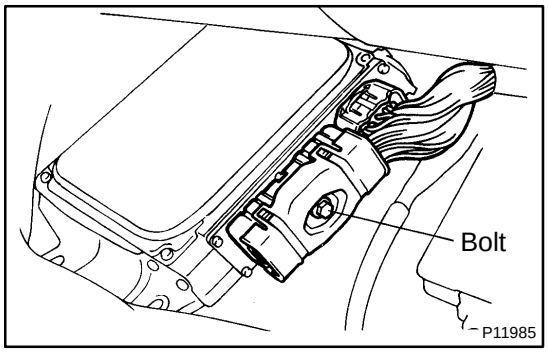

4. **REMOVE ECM**

(a) Remove the nut, and disconnect the ECM from the floor panel.

(b) Fully loosen the bolt and disconnect the 2 ECM connectors, and remove the ECM.

5. **INSPECT ECM**

(See page DI-164)

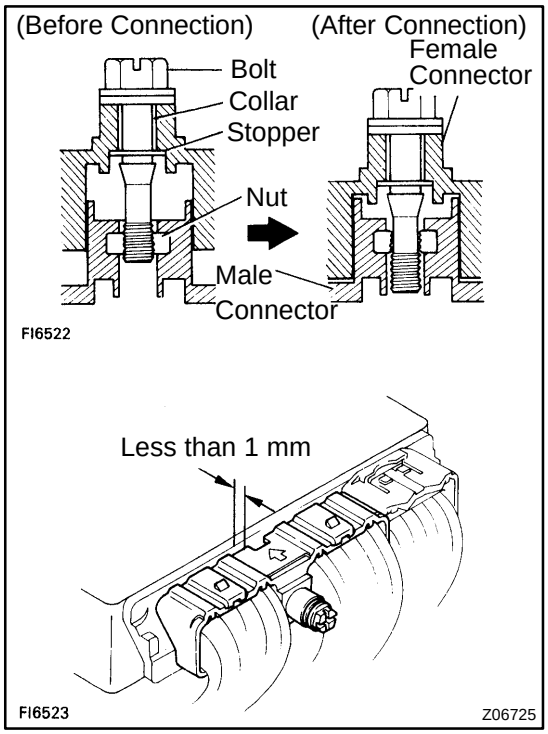

6. **REINSTALL ECM**

(a) Connect the 2 ECM connectors.

- Match the male connector correctly with the female connector, then press them together.
- Tighten the bolt.
  Make sure the connector is completely connected by tightening the bolt until there is a clearance of less than 1 mm (0.04 in.) between the bottom of the male connector and the end of the female connector.

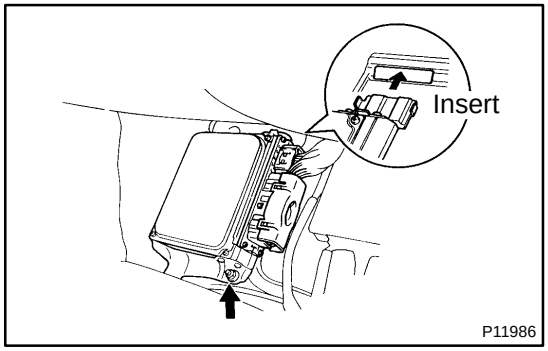

(b) Install the ECM with the nut.

7. **REINSTALL ECM PROTECTOR**
8. **REINSTALL SCUFF PLATE**
9. **RECONNECT NEGATIVE (-) TERMINAL CABLE TO BATTERY**

FUEL CUT RPM

SF0IC-02

INSPECTION

1. WARM UP ENGINE

Allow the engine to warm up to normal operating temperature.

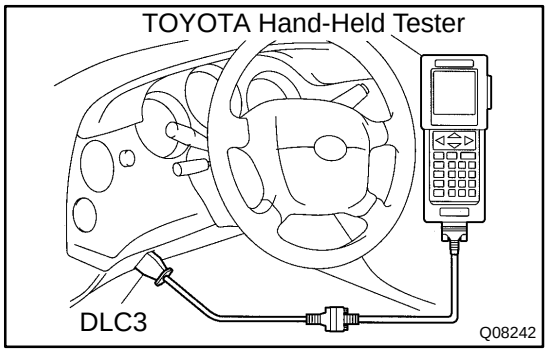

2. CONNECT TOYOTA HAND-HELD TESTER OR OBDII SCAN TOOL

(a) Connect the TOYOTA hand-held tester or OBDII scan tool to the DLC3.

(b) Please refer to the TOYOTA hand-held tester or OBDII scan tool operator's manual for further details.

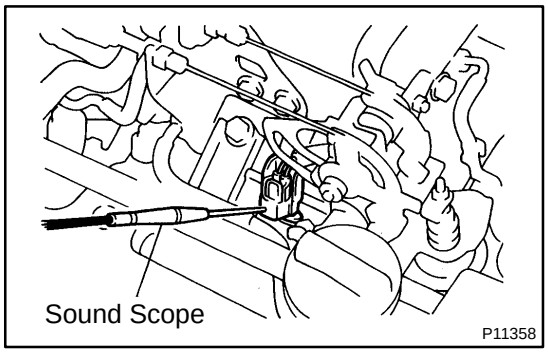

3. INSPECT FUEL CUTOFF OPERATION

(a) Increase the engine speed to at least 3,000 rpm.

(b) Check for injector operating noise.

(c) Check that when the throttle lever is released, injector operation noise stops momentarily and then resumes.

HINT:

Measure with the A/C OFF.

Fuel return speed:
1,400 rpm
(Vehicle speed less than 25 km/h (16 mph), with brake OFF)

4. DISCONNECT TOYOTA HAND-HELD TESTER OR OBDII SCAN TOOL

CH03L-01

ON-VEHICLE INSPECTION

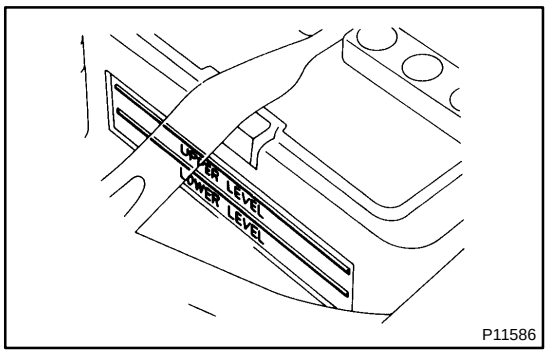

1. CHECK BATTERY ELECTROLYTE LEVEL

Check the electrolyte quantity of each cell.

Maintenance-Free Battery:

If under the lower level, replace the battery (or add distilled water if possible). Check the charging system.

Except Maintenance-Free Battery:

If under the lower level, add distilled water.

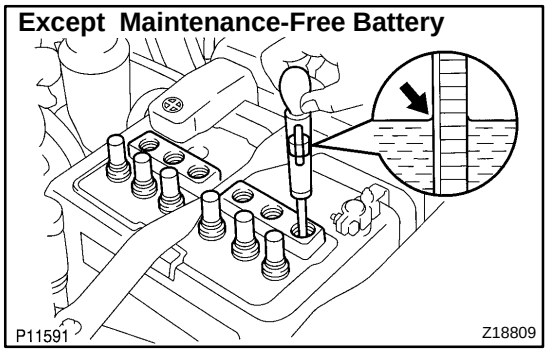

2. Except Maintenance-Free Battery: CHECK BATTERY SPECIFIC GRAVITY

Check the specific gravity of each cell.

Standard specific gravity: 1.25 - 1.29 at 20˚C (68˚F)

If the specific gravity is less than specification, charge the battery.

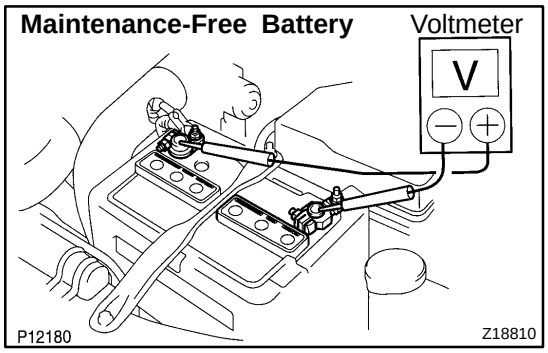

3. Maintenance-Free Battery: CHECK BATTERY POSITIVE VOLTAGE

(a) After having driven the vehicle and in the case that 20 minutes have not passed after having stopped the engine, turn the ignition switch ON and turn on the electrical system (headlight, blower motor, rear defogger etc.) for 60 seconds to remove the surface charge.

(b) Turn the ignition switch OFF and turn off the electrical systems.

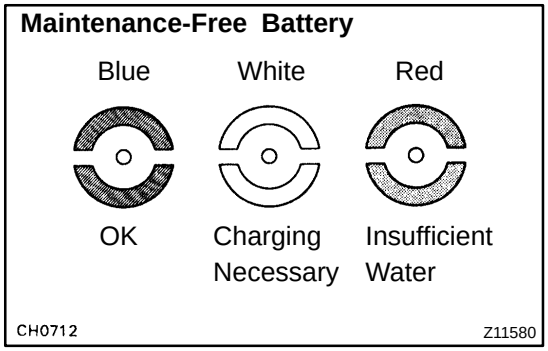

(c) Measure the battery positive voltage between the negative (-) and positive (+) terminals of the battery.

Standard voltage: 12.5 - 12.9 V at 20˚C (68˚F)

If the voltage is less than specification, charge the battery.

HINT:

Check the indicator as shown in the illustration.

4. CHECK BATTERY TERMINALS AND FUSES

(a) Check that the battery terminals are not loose or corroded.

If the terminals are corroded, clean the terminals.

(b) Check the fuses for continuity.

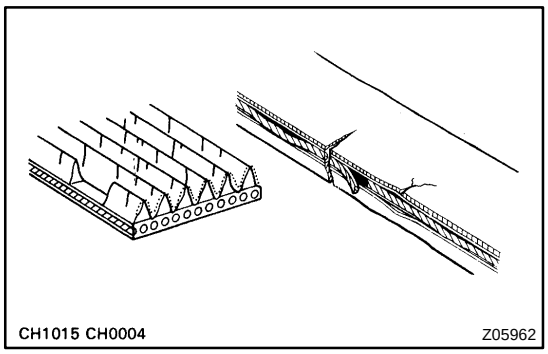

5. INSPECT DRIVE BELT

HINT:

A belt tensioner is used, so checking the belt tension is not necessary.

(a) Visually check the drive belt for excessive wear, frayed cords, etc.

If necessary, replace the drive belt.

HINT:

- Cracks on the rib side of a drive belt are considered acceptable. If the drive belt has chunks missing from the ribs, it should be replaced.
- The drive belt tension can be released by turning the belt tensioner clockwise.

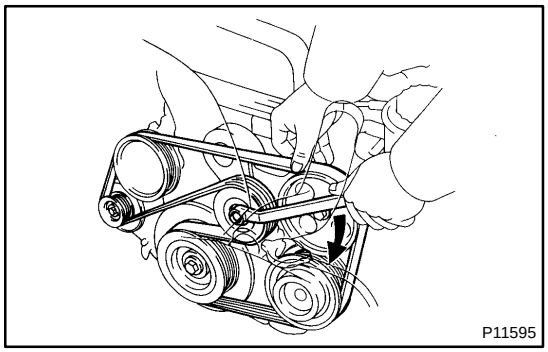

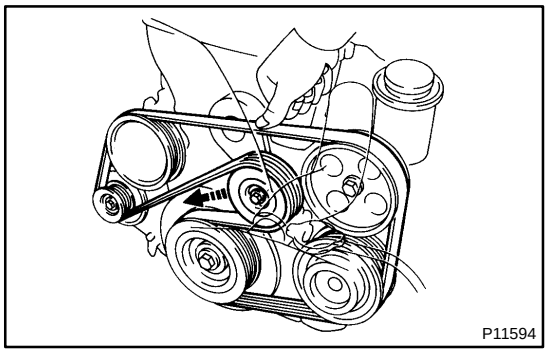

(b) Check the belt tensioner operation.

- Check that the belt tensioner moves downward when the drive belt is pressed down at the points indicated in the illustration with approx. 98 N (10 kgf, 22.0 lbf) of force.
- Check the alignment of the belt tensioner pulley to make sure the drive belt will not slip off the pulley.

If necessary, replace the belt tensioner.

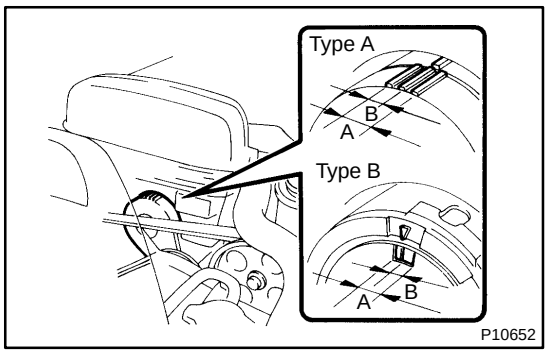

- Check that the arrow mark on the belt tensioner falls within area A of the scale.

If it is outside area A, replace the drive belt.

HINT:

- When a new belt is installed, it should lie within area B. If not, the drive belt is not correct.

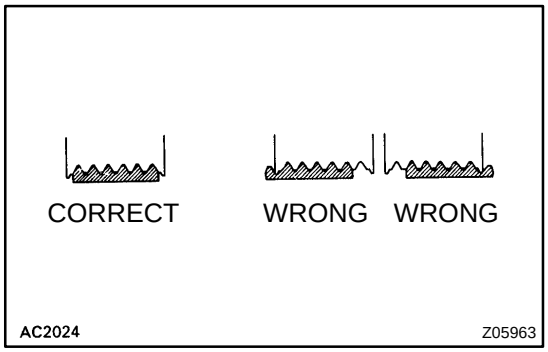

- After installing a drive belt, check that it fits properly in the ribbed grooves.
- Check by hand to confirm that the belt has not slipped out of the groove on the bottom of the pulley.

6. REMOVE ENGINE UNDER COVER

7. VISUALLY CHECK GENERATOR WIRING AND LISTEN FOR ABNORMAL NOISES

(a) Check that the wiring is in good condition.

(b) Check that there is no abnormal noise from the generator while the engine is running.

8. CHECK CHARGE WARNING LIGHT CIRCUIT

(a) Warm up the engine and then turn it off.

(b) Turn off all accessories.

(c) Turn the ignition switch "ON". Check that the charge warning light is lit.

(d) Start the engine. Check that the light goes off.

If the light does not go off as specified, troubleshoot the charge light circuit.

9. INSPECT CHARGING CIRCUIT WITHOUT LOAD

HINT:

If a battery/generator tester is available, connect the tester to the charging circuit as per manufacturer's instructions.

(a) If a tester is not available, connect a voltmeter and ammeter to the charging circuit as follows:

- Disconnect the wire from terminal B of the generator, and connect it to the negative (-) probe of the ammeter.
- Connect the positive (+) probe of the ammeter to terminal B of the generator.
- Connect the positive (+) probe of the voltmeter to terminal B of the generator.
- Ground the negative (-) probe of the voltmeter.

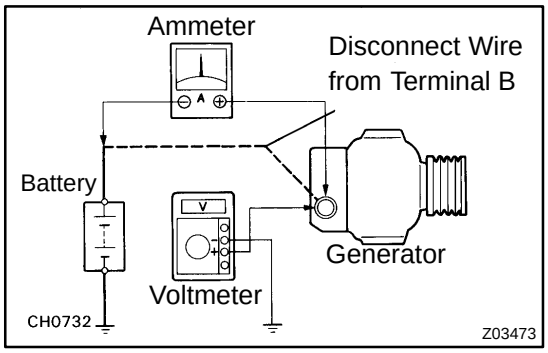

(b) Check the charging circuit as follows:

With the engine running from idling to 2,000 rpm, check the reading on the ammeter and voltmeter.

Standard amperage: 10 A or less

Standard voltage: 13.2 - 14.8 V

If the voltmeter reading is more than standard voltage, replace the voltage regulator.

If the voltmeter reading is less than standard voltage, check the voltage regulator and generator as follows:

- With terminal F grounded, start the engine and check the voltmeter reading of terminal B.
- If the voltmeter reading is more than standard voltage, replace the voltage regulator.
- If the voltmeter reading is less than standard voltage, check the generator.

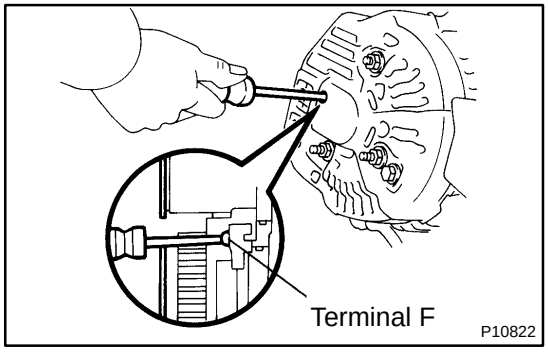

10. INSPECT CHARGING CIRCUIT WITH LOAD

(a) With the engine running at 2,000 rpm, turn on the high beam headlights and place the heater blower switch at "HI".

(b) Check the reading on the ammeter.

Standard amperage: 30 A or more

If the ammeter reading is less than the standard amperage, repair the generator.

HINT:

If the battery is fully charged the indication will sometimes be less than standard amperage.

11. REINSTALL ENGINE UNDER COVER

GENERATOR

COMPONENTS

CH03M-01

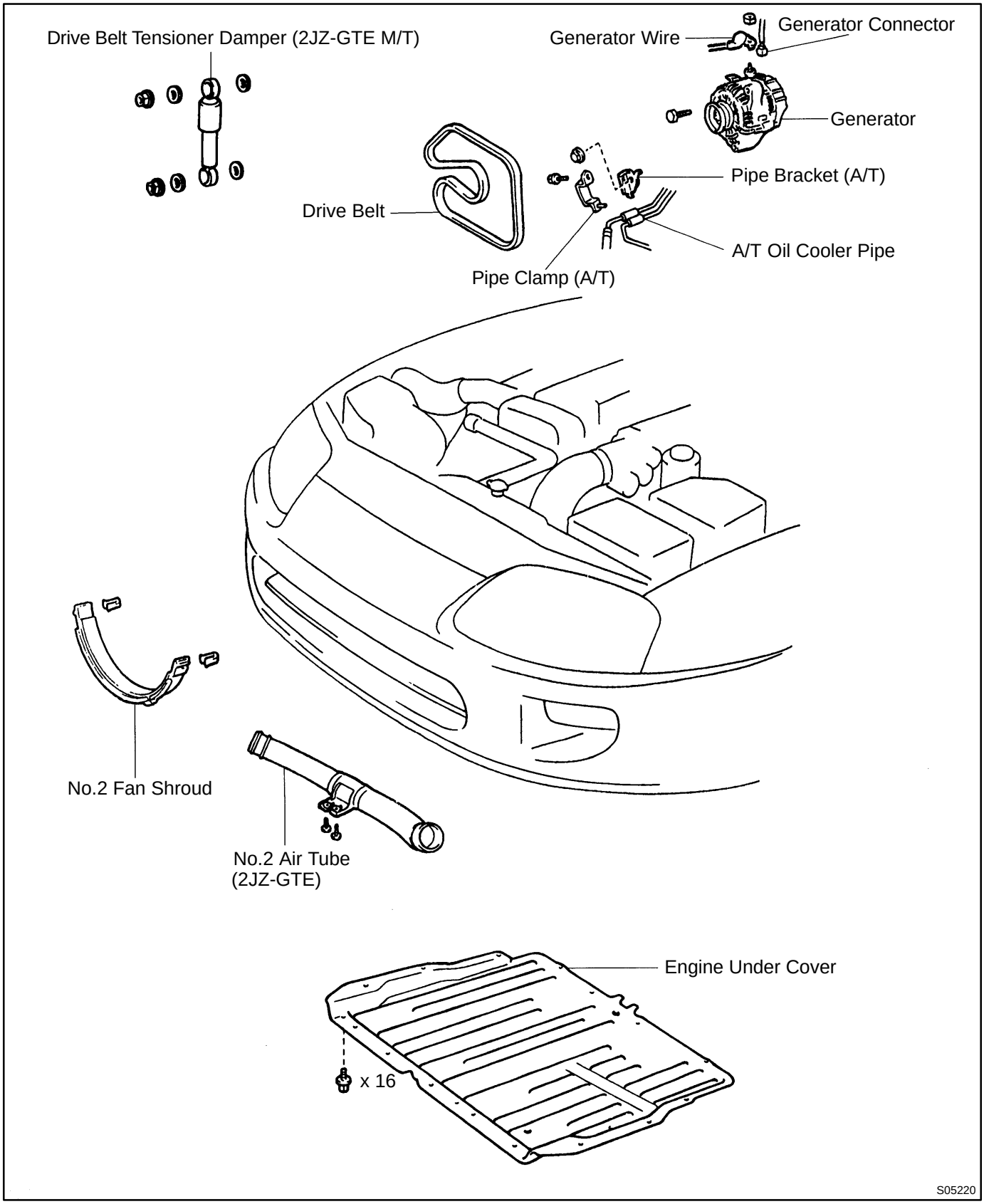

2JZ-GTE M/T

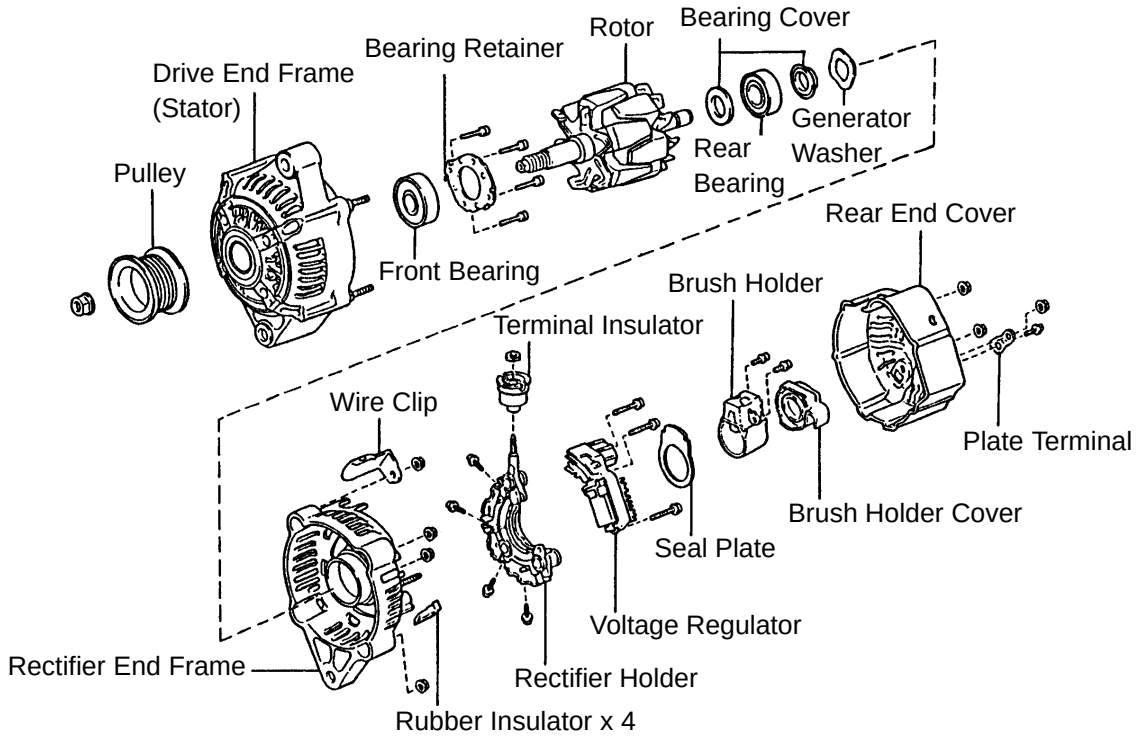

Except 2JZ-GTE M/T

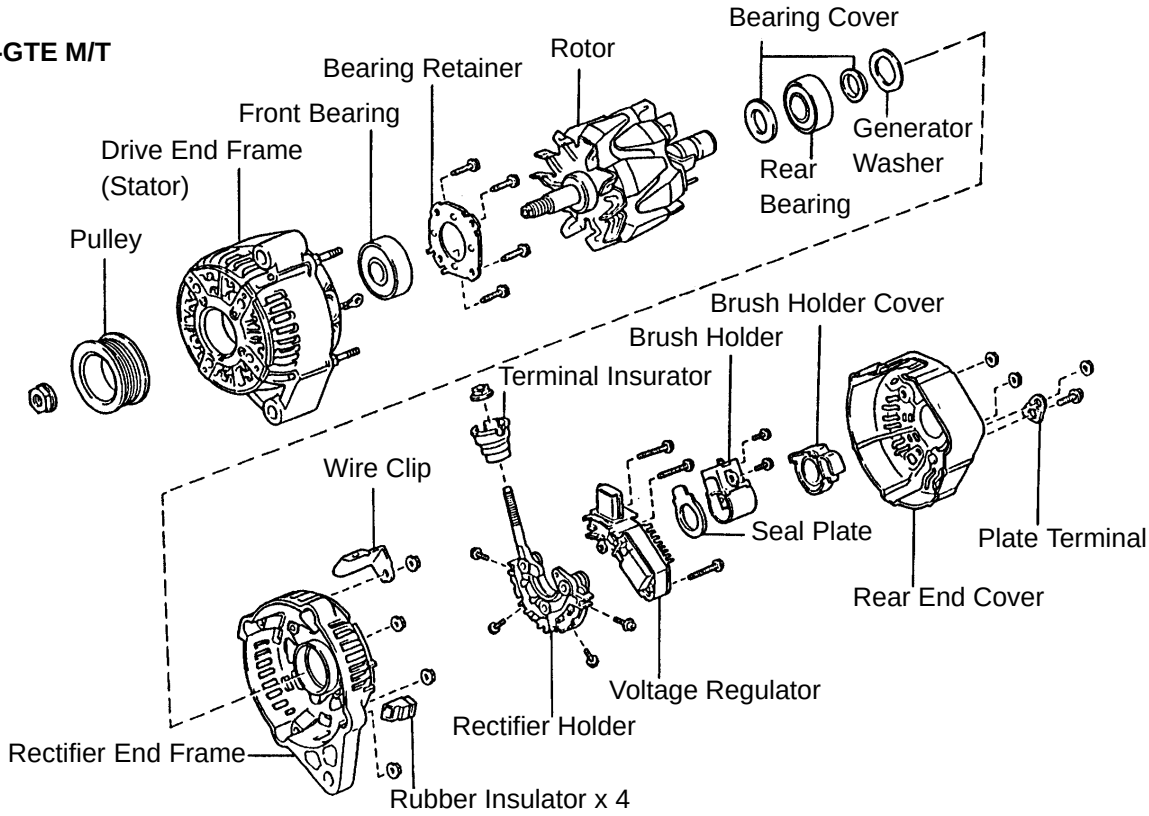

P19044

B02786

CH03N-01

2JZ-GTE M/T

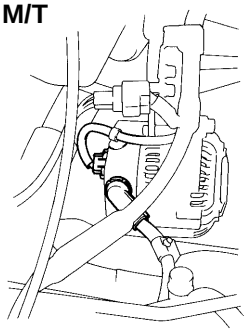

Except 2JZ-GTE M/T

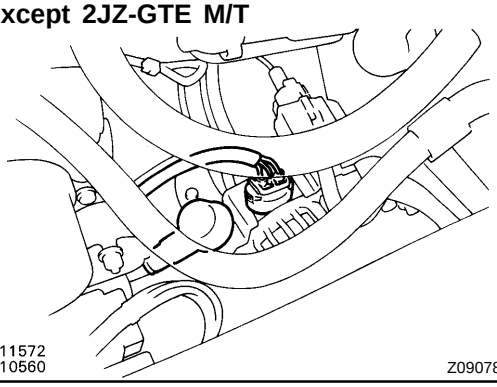

P11572
P10560
Z09078

REMOVAL

1. **REMOVE ENGINE UNDER COVER**
2. **2JZ-GTE:**
   REMOVE NO.2 AIR TUBE FOR CAC
3. **REMOVE NO.2 FAN SHROUD**
4. **2JZ-GTE M/T:**
   REMOVE DRIVE BELT TENSIONER DAMPER
   Torque: 20 N·m (200 kgf·cm, 14 ft·lbf)
5. **REMOVE DRIVE BELT**
6. **REMOVE GENERATOR**

(a) Disconnect the generator connector.

(b) Remove the rubber cap and nut, and disconnect the generator wire.

(c) Disconnect the generator wire clamp from the wire clip on the generator.

A/T

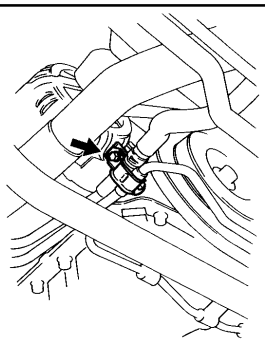

P11570
Z16728

(d) A/T:
Remove the bolt and pipe clamp, and disconnect the 2 oil cooler pipes from the generator.

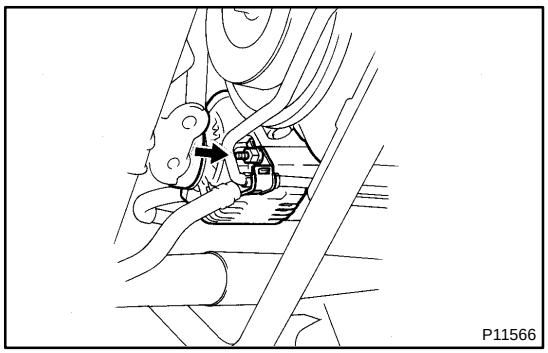

P11566

(e) Remove the bolt, nut, pipe bracket and generator.
Torque: 40 N·m (400 kgf·cm, 30 ft·lbf)

CH03S-01

DISASSEMBLY

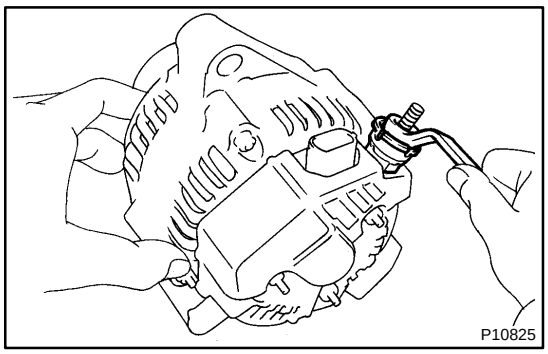

1. REMOVE REAR END COVER

(a) Remove the nut and terminal insulator.

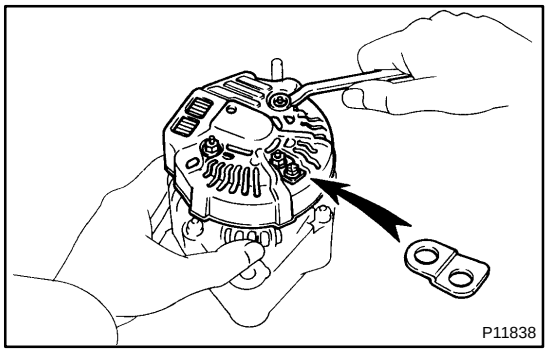

(b) Remove the bolt, 3 nuts, plate terminal and end cover.

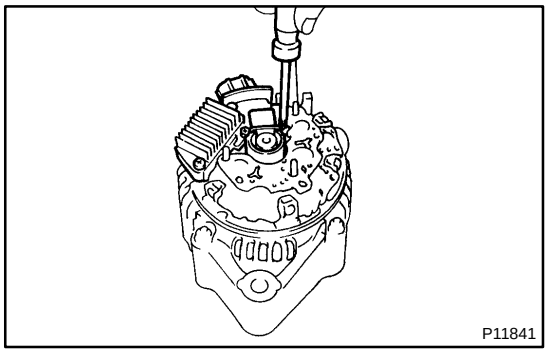

2. REMOVE BRUSH HOLDER AND VOLTAGE REGULATOR

(a) Remove the brush holder cover from the brush holder.
(b) Remove the 5 screws, brush holder and voltage regulator.
(c) Remove the seal plate from the rectifier end frame.

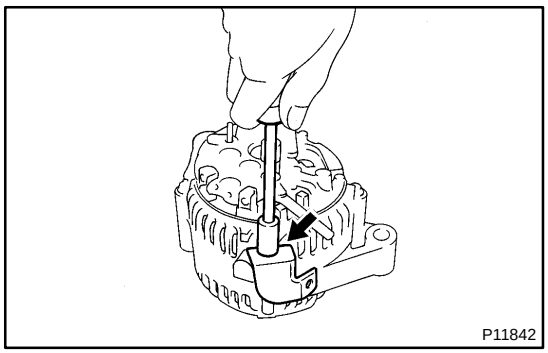

3. REMOVE WIRE CLIP

Remove the nut and wire clip.

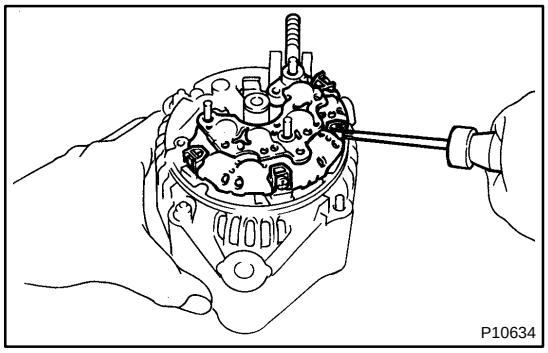

4. REMOVE RECTIFIER HOLDER

(a) Remove the 4 screws and rectifier holder.
(b) Remove the 4 rubber insulators.

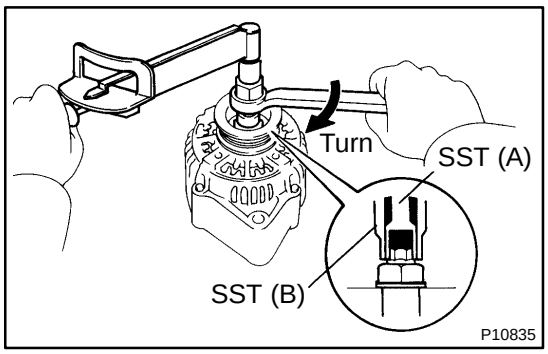

5. REMOVE PULLEY

(a) Hold SST (A) with a torque wrench, and tighten SST (B) clockwise to the specified torque.
SST 09820-63010
Torque: 39 N·m (400 kgf·cm, 29 ft·lbf)

(b) Check that SST (A) is secured to the rotor shaft.

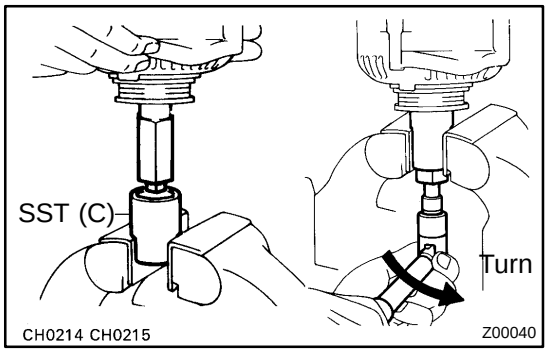

(c) Mount SST (C) in a vise.

(d) Insert SST (B) into SST (C), and attach the pulley nut to SST (C).

(e) To loosen the pulley nut, turn SST (A) in the direction shown in the illustration.

NOTICE:

To prevent damage to the rotor shaft, do not loosen the pulley nut more than one-half of a turn.

(f) Remove the generator from SST (C).

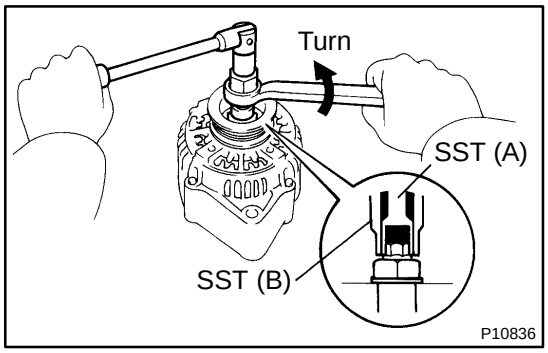

(g) Turn SST (B), and remove SST (A and B).

(h) Remove the pulley nut and pulley.

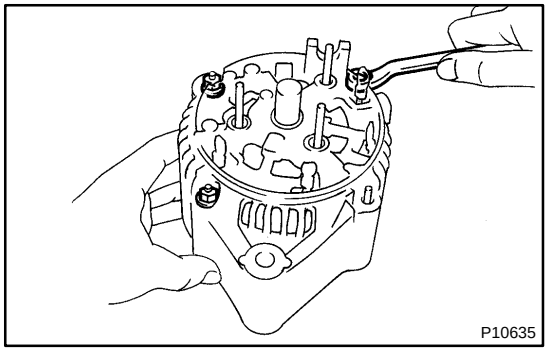

6. REMOVE RECTIFIER END FRAME

(a) Remove the 3 nuts.

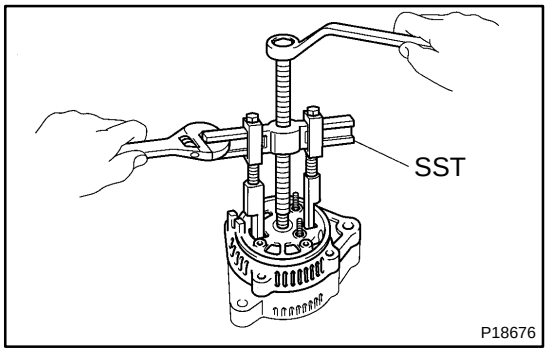

(b) Using SST, remove the rectifier end frame.
SST 09950-40010

(c) Remove the generator washer.

7. REMOVE ROTOR FROM DRIVE END FRAME

CH03O-01

INSPECTION

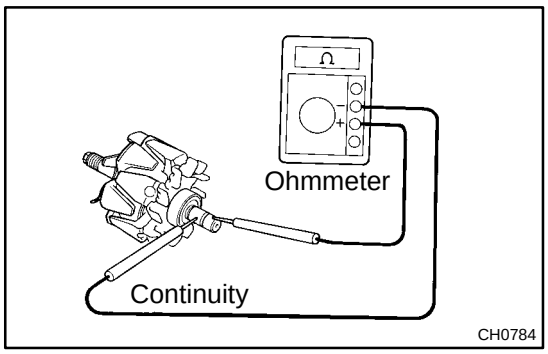

1. INSPECT ROTOR FOR OPEN CIRCUIT

Using an ohmmeter, check that there is continuity between the slip rings.

Standard resistance: 2.7 - 3.1 Ω at 20˚C (68˚F)

If there is no continuity, replace the rotor.

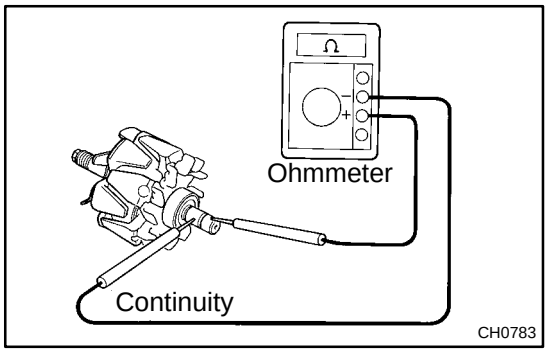

2. INSPECT ROTOR FOR GROUND

Using an ohmmeter, check that there is no continuity between the slip ring and rotor.

If there is continuity, replace the rotor.

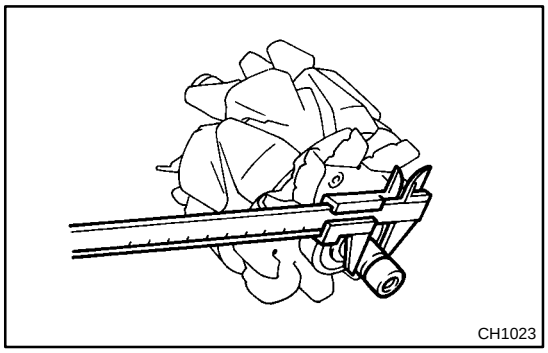

3. INSPECT SLIP RINGS

(a) Check that the slip rings are not rough or scored.

If rough or scored, replace the rotor.

(b) Using a vernier caliper, measure the slip ring diameter.

Standard diameter:
14.2 - 14.4 mm (0.559 - 0.567 in.)
Minimum diameter:
12.8 mm (0.504 in.)

If the diameter is less than minimum, replace the rotor.

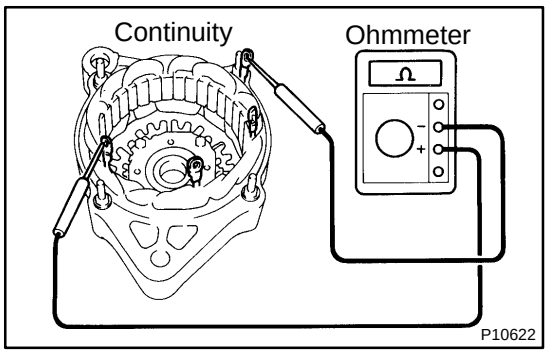

4. INSPECT STATOR FOR OPEN CIRCUIT

Using an ohmmeter, check that there is continuity between the coil leads.

If there is no continuity, replace the drive end frame assembly.

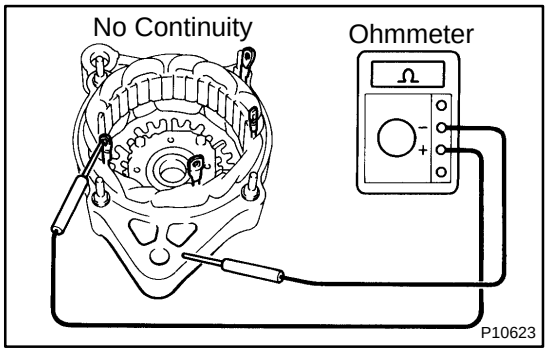

5. INSPECT STATOR FOR GROUND

Using an ohmmeter, check that there is no continuity between the coil lead and drive end frame.

If there is continuity, replace the drive end frame assembly.

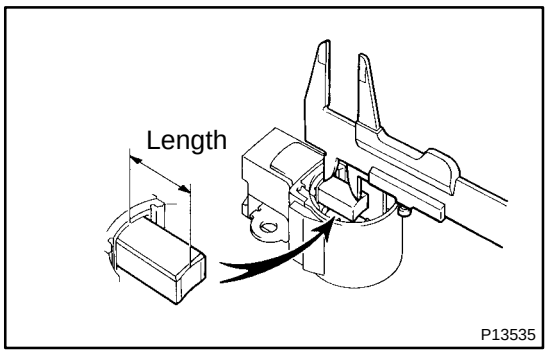

6. INSPECT EXPOSED BRUSH LENGTH

Using a vernier caliper, measure the exposed length.

Standard exposed length:
9.5 - 11.5 mm (0.347 - 0.453 in.)
Minimum exposed length:
1.5 mm (0.059 in.)

If the exposed length is less than minimum, replace the brush holder.

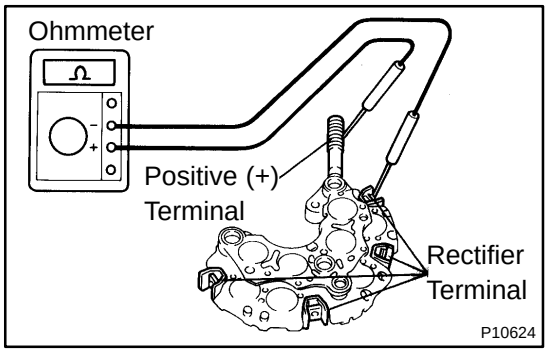

7. INSPECT POSITIVE RECTIFIER

(a) Using an ohmmeter, connect one tester probe to the positive (+) terminal and the other to each rectifier terminal.
(b) Reverse the polarity of the tester probes and repeat step (a).
(c) Check that one shows continuity and the other shows no continuity.

If continuity is not as specified, replace the rectifier holder.

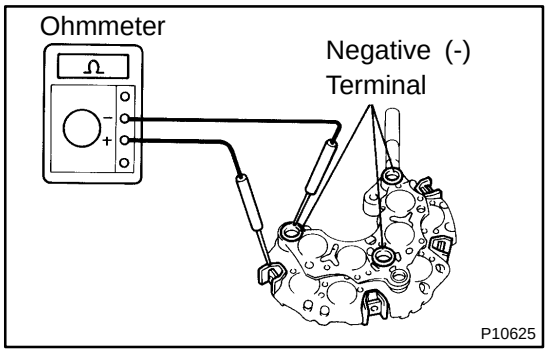

8. INSPECT NEGATIVE RECTIFIER

(a) Using an ohmmeter, connect one tester probe to each negative (-) terminal and the other to each rectifier terminal.
(b) Reverse the polarity of the tester probes and repeat step (a).
(c) Check that one shows continuity and the other shows no continuity.

If continuity is not as specified, replace the rectifier holder.

9. INSPECT FRONT BEARING

Check that the bearing is not rough or worn.

10. INSPECT REAR BEARING

Check that the bearing is not rough or worn.

CH03P-02

REPLACEMENT

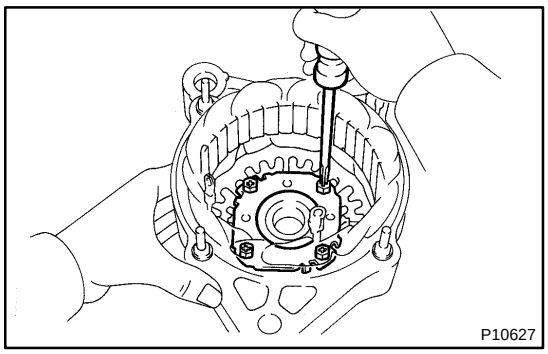
P10627

1. REPLACE FRONT BEARING

(a) Remove the 4 screws, bearing retainer and bearing.

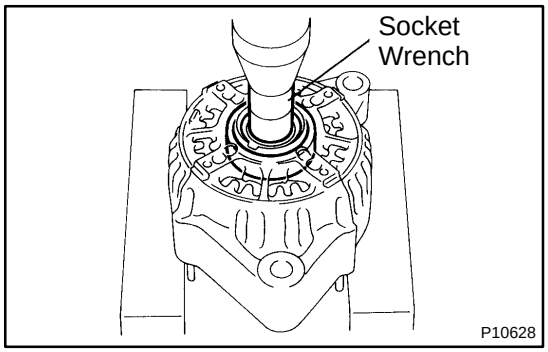

P10628

(b) Using a socket wrench and press, press out the bearing.

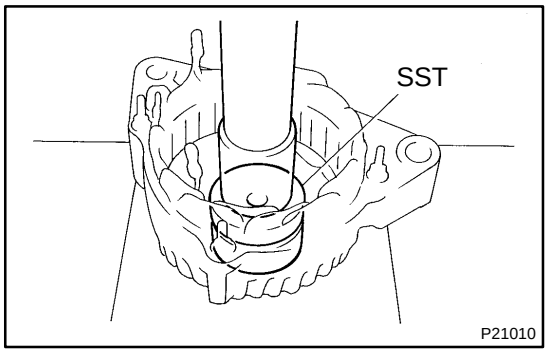

P21010

(c) Using SST and a press, press in a new bearing.
SST 09950-60010 (09951-00500)

(d) Install the bearing retainer with the 4 screws.
Torque: 3.0 N·m (31 kgf·cm, 27 in.·lbf)

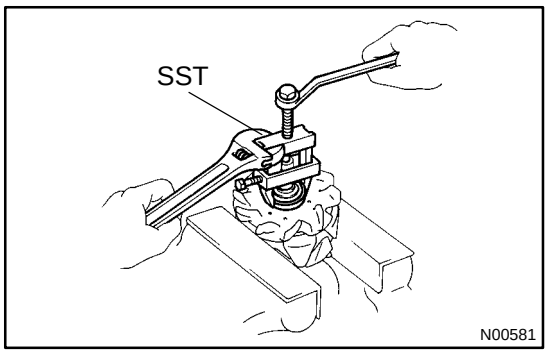

N00581

2. REPLACE REAR BEARING

(a) Using SST, remove the bearing cover (outside) and bearing.
SST 09820-00021

NOTICE:
Be careful not to damage the fan.

(b) Remove the beating cover (inside).

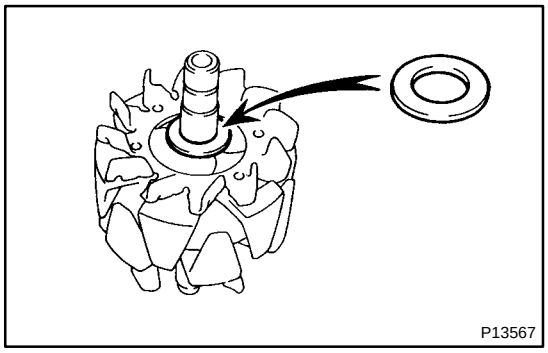
P13567

(c) Place the bearing cover (inside) on the rotor.

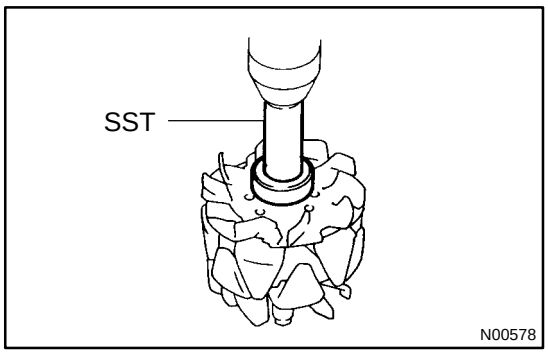

(d) Using SST and a press, press in a new bearing.
SST 09820-00030

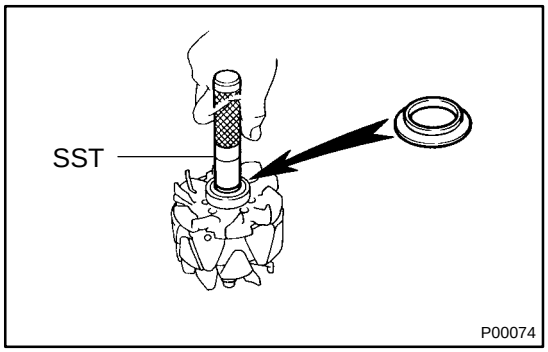

(e) Using SST, push in the bearing cover (outside).
SST 09285-76010

CH03Q-01

REASSEMBLY

1. PLACE DRIVE END FRAME ON PULLEY

2. INSTALL ROTOR TO DRIVE END FRAME

3. INSTALL RECTIFIER END FRAME

(a) Place the generator washer on the rotor.

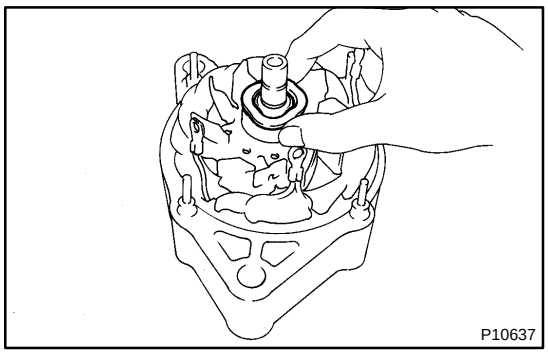

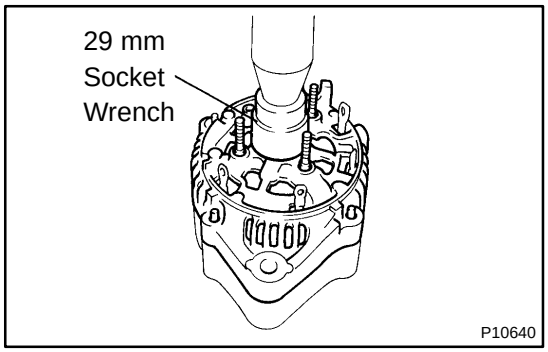

(b) Using a 29 mm socket wrench and press, slowly press in the rectifier end frame.

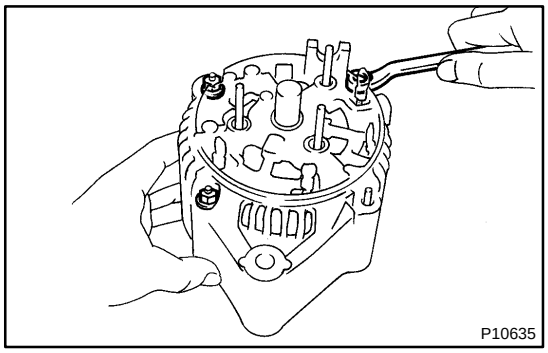

(c) Install the 3 nuts.
Torque: 4.5 N·m (46 kgf·cm, 40 in.·lbf)

4. INSTALL PULLEY

(a) Install the pulley to the rotor shaft by tightening the pulley nut by hand.

(b) Hold SST (A) with a torque wrench, and tighten SST (B) clockwise to the specified torque.
SST 09820-63010
Torque: 39 N·m (400 kgf·cm, 29 ft·lbf)

(c) Check that SST (A) is secured to the pulley shaft.

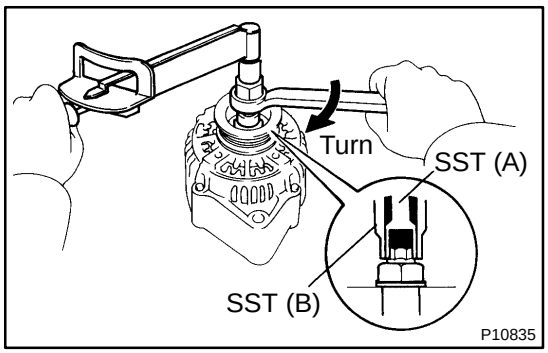

(d) Mount SST (C) in a vise.

(e) Insert SST (B) into SST (C), and attach the pulley nut to SST (C).

(f) To torque the pulley nut, turn SST (A) in the direction shown in the illustration.
Torque: 110.5 N·m (1,125 kgf·cm, 81 ft·lbf)

(g) Remove the generator from SST (C).

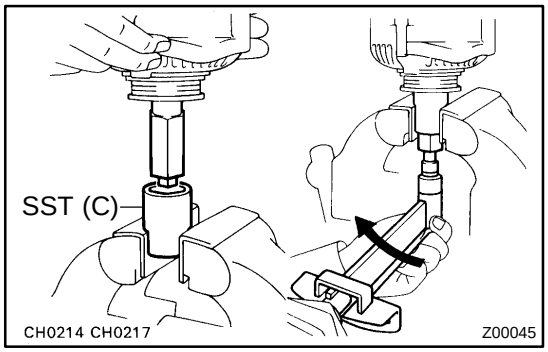

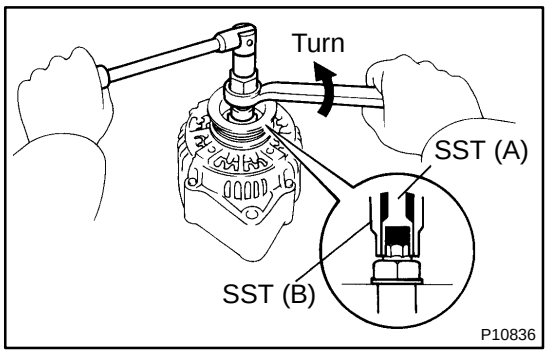

(h) Turn SST (B), and remove SST (A and B).

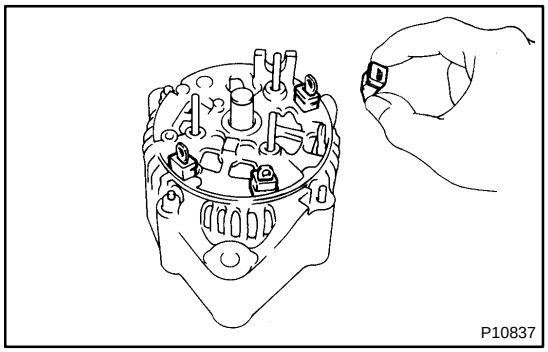

5. INSTALL RECTIFIER HOLDER

(a) Install the 4 rubber insulators on the lead wires.

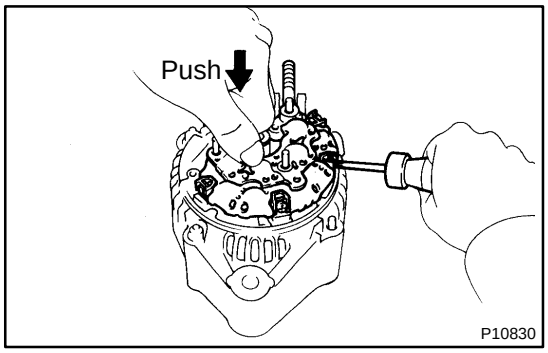

(b) Install the rectifier holder while pushing it with the 4 screws.

Torque: 2.9 N·m (30 kgf·cm, 26 in.·lbf)

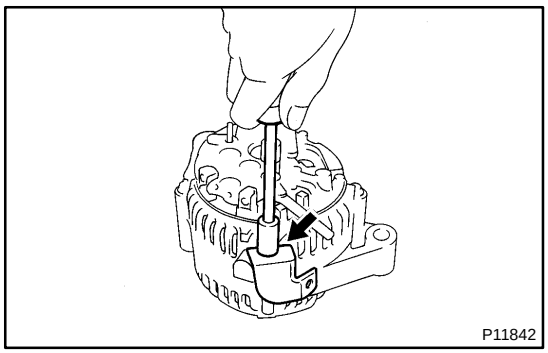

6. INSTALL WIRE CLIP

Install the wire clip with the nut.

Torque: 5.4 N·m (55 kgf·cm, 48 in.·lbf)

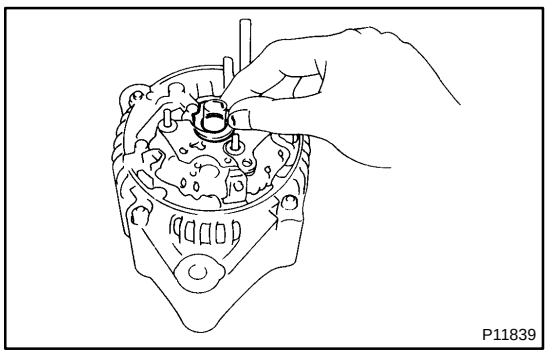

7. INSTALL VOLTAGE REGULATOR AND BRUSH HOLDER

(a) Place the seal plate on the rectifier end frame.

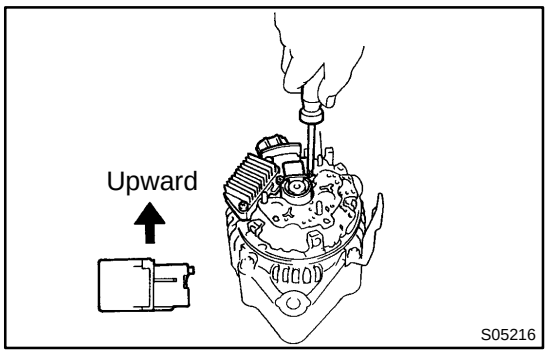

(b) Place the voltage regulator and brush holder on the rectifier end frame.

NOTICE:

Be careful of the holder installation direction.

(c) Install the 5 screws.
Torque: 2.0 N·m (20 kgf·cm, 18 in.·lbf)

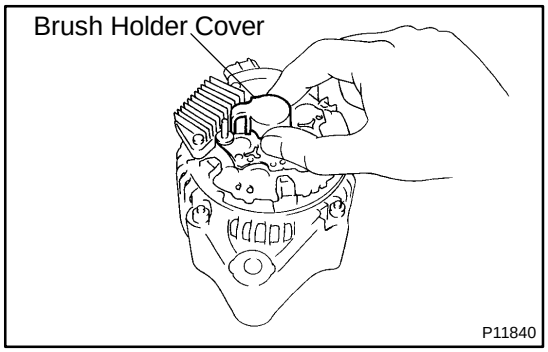

(d) Place the brush holder cover on the brush holder.

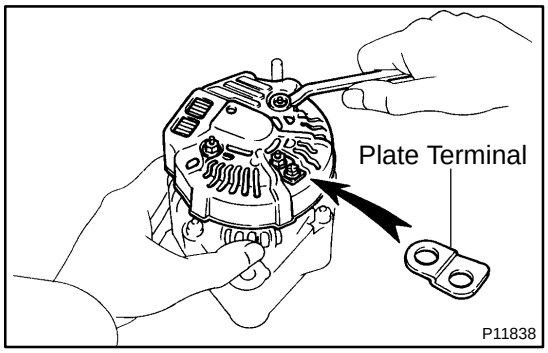

8. INSTALL REAR END COVER

(a) Install the end cover and plate terminal with the bolt and 3 nuts.
Torque:
Nut 4.4 N·m (45 kgf·cm, 39 in.·lbf)
Bolt 3.9 N·m (40 kgf·cm, 35 in.·lbf)

(b) Install the terminal insulator with the nut.
Torque: 6.5 N·m (67 kgf·cm, 58 in.·lbf)

9. CHECK THAT ROTOR ROTATES SMOOTHLY

STARTER

COMPONENTS

ST04C-02

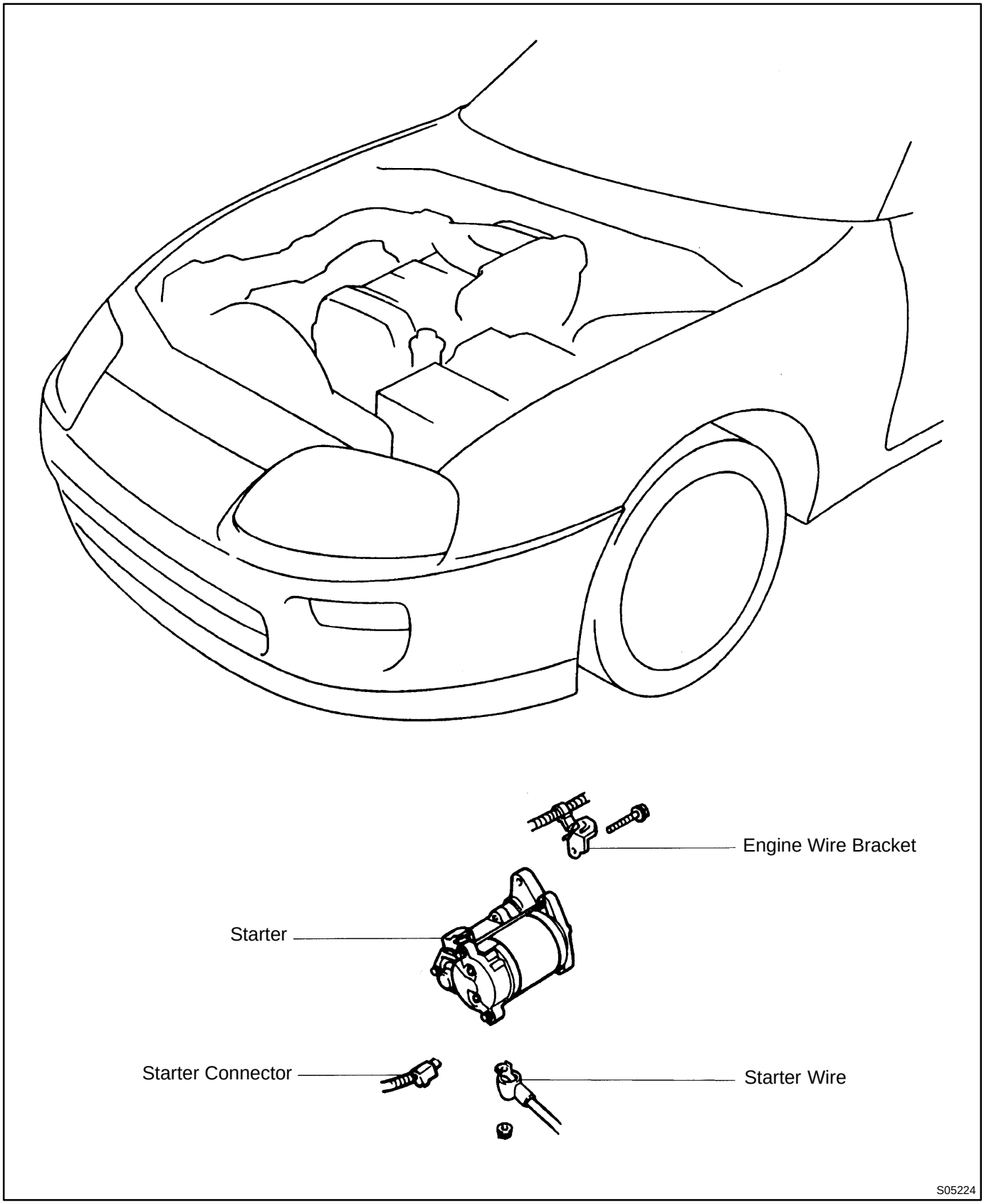

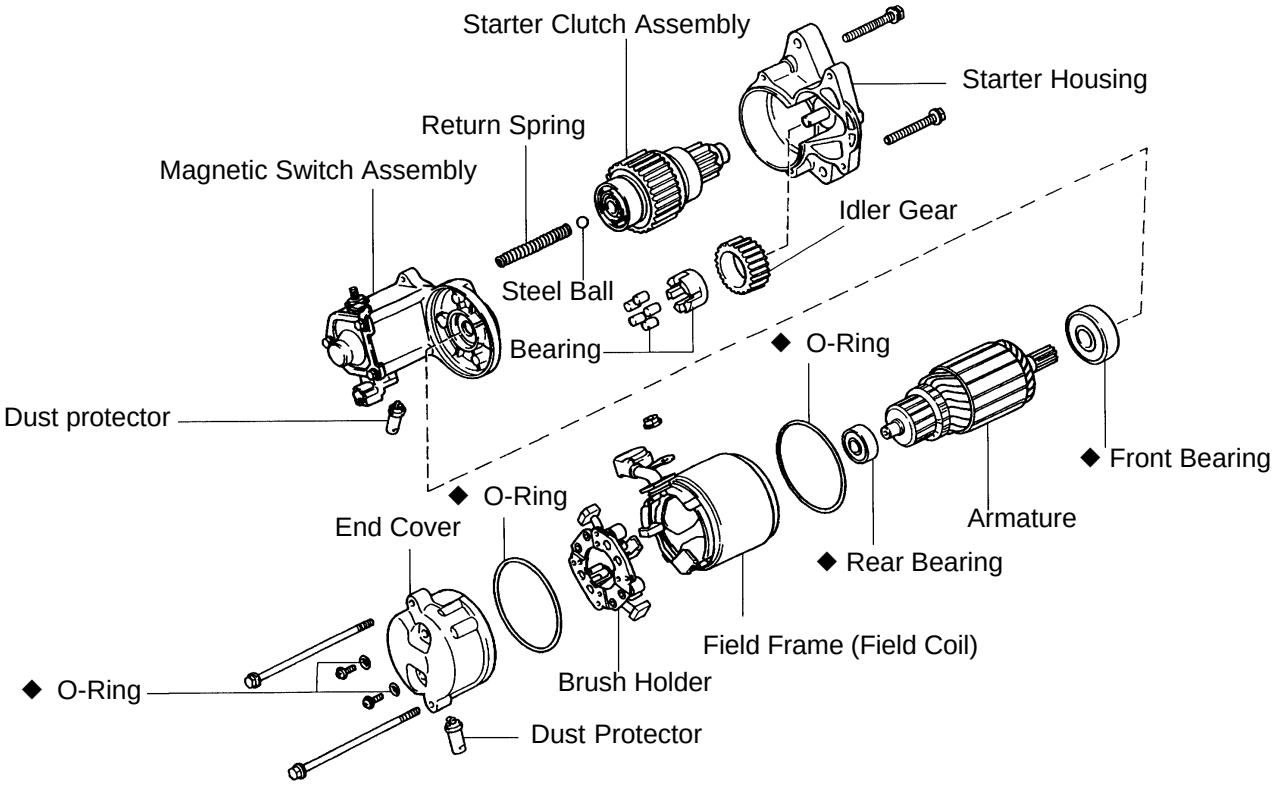

Magnetic Switch Assembly

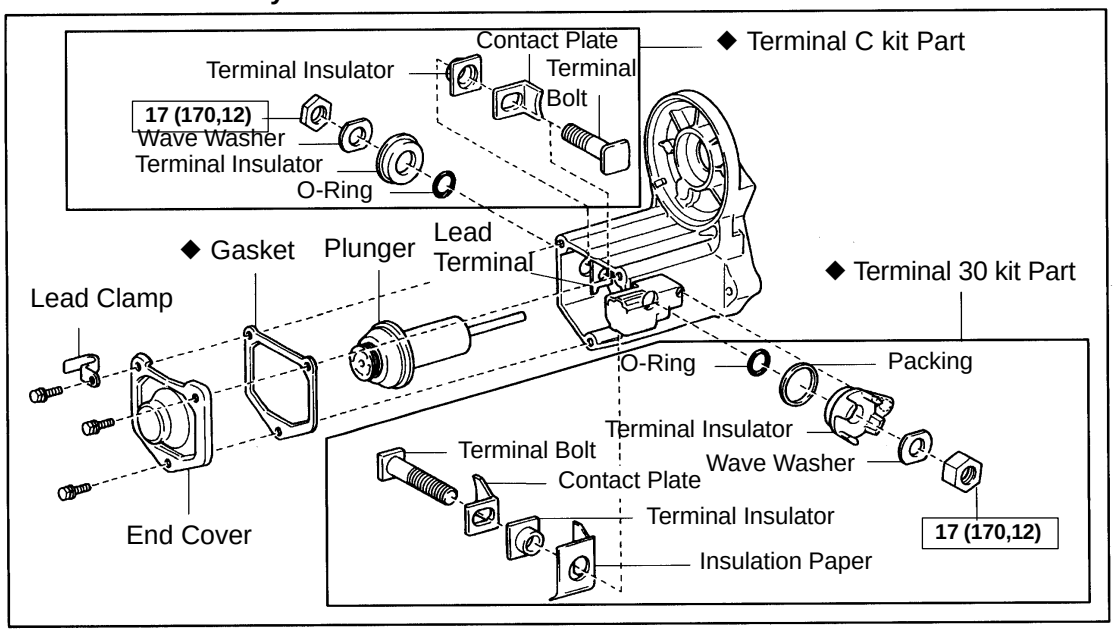

N·m (kgf·cm, ft·lbf) : Specified torque
◆ Non-reusable part

Z18832

ST04D-01

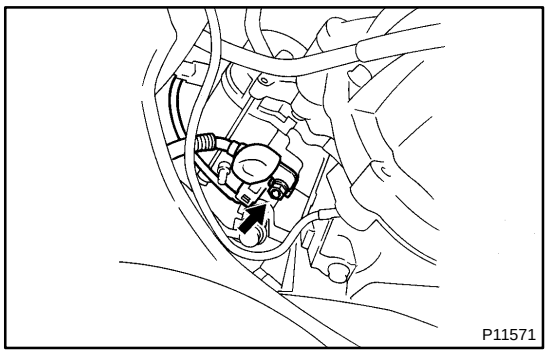

REMOVAL

REMOVE STARTER

(a) Remove the rubber cap and nut, and disconnect the starter wire.

(b) Disconnect the starter connector.

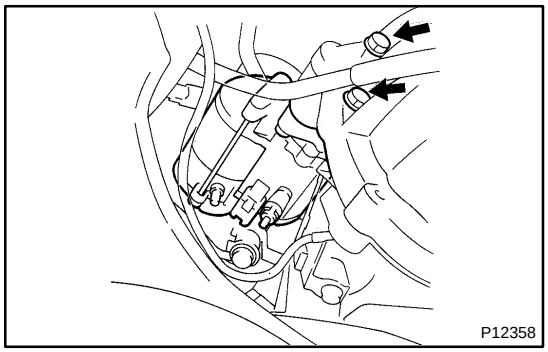

(c) Remove the 2 bolts and starter.
Torque: 37 N·m (380 kgf·cm, 27 ft·lbf)

ST04E-01

DISASSEMBLY

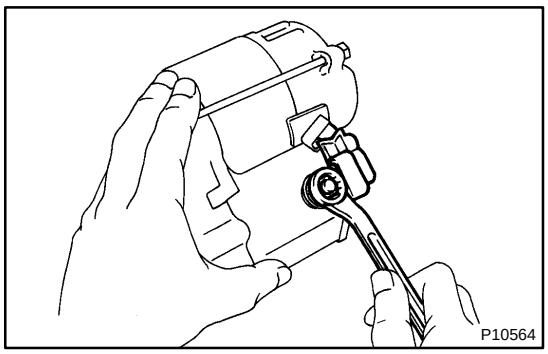

1. REMOVE DUST PROTECTOR

2. REMOVE FIELD FRAME AND ARMATURE

(a) Remove the nut, and disconnect the lead wire from the magnetic switch terminal.
Torque: 5.9 N·m (60 kgf·cm, 52 in.·lbf)

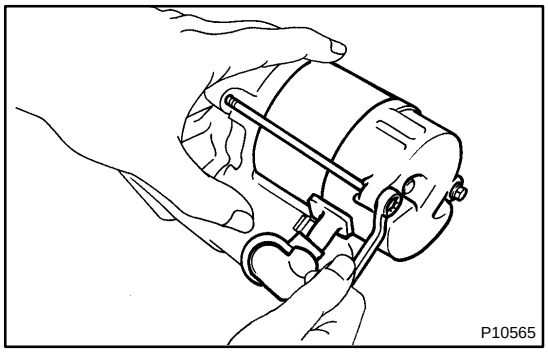

(b) Remove the 2 through bolts.
Torque: 5.9 N·m (60 kgf·cm, 52 in.·lbf)

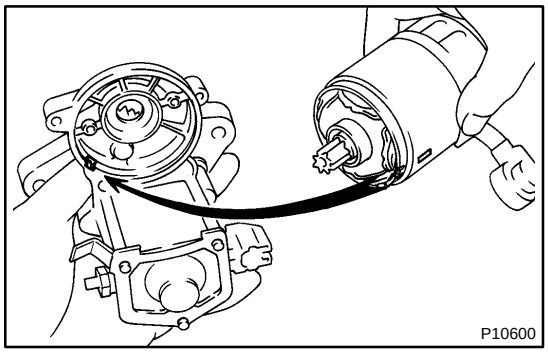

(c) Pull out the field frame together with the armature.

HINT:

Align the protrusion of the field frame with the groove of the magnetic switch.

(d) Remove the O-ring from the field frame.

HINT:

At the time of installation, please refer to the following items. Use a new O-ring.

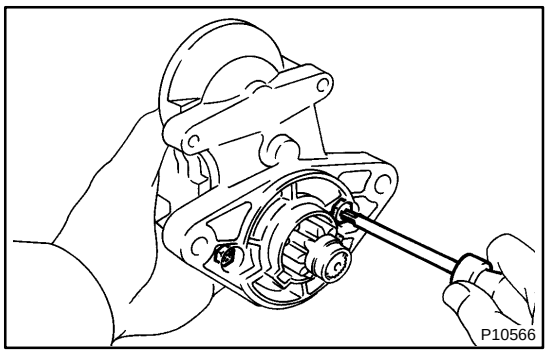

3. REMOVE STARTER HOUSING, CLUTCH ASSEMBLY AND GEAR

(a) Remove the 2 bolts.
Torque: 5.9 N·m (60 kgf·cm, 52 in.·lbf)

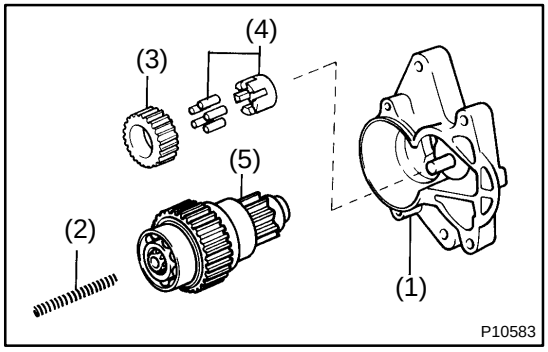

(b) Remove these parts from the magnetic switch:
(1) Starter housing
(2) Return spring
(3) Idler gear
(4) Bearing
(5) Clutch assembly

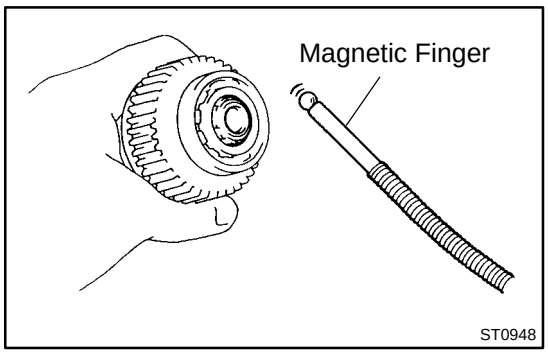

4. REMOVE STEEL BALL

Using a magnetic finger, remove the steel ball from the clutch shaft hole.

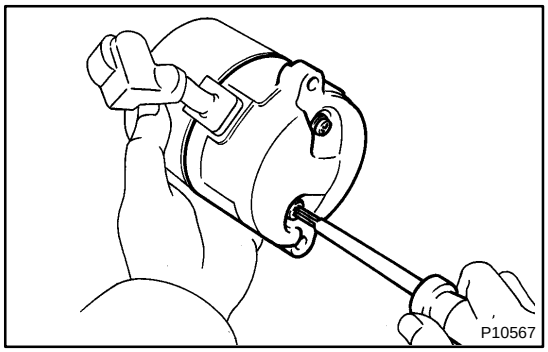

5. REMOVE BRUSH HOLDER

(a) Remove the 2 screws and end cover from the field frame.
Torque: 1.5 N·m (15 kgf·cm, 13 in.·lbf)

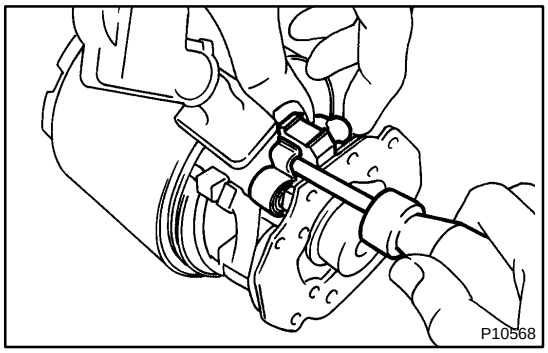

(b) Using a screwdriver, hold the spring back and disconnect the brush from the brush holder. Disconnect the 4 brushes, and remove the brush holder.

NOTICE:

Check that the positive (+) lead wires are not grounded.

6. REMOVE ARMATURE FROM FIELD FRAME

ST04F-01

INSPECTION

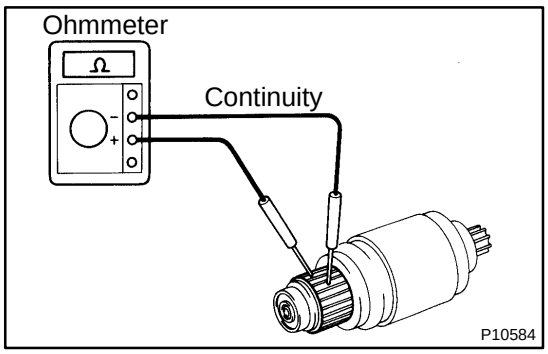

1. INSPECT ARMATURE COIL

(a) Check the commutator for open circuit.
Using an ohmmeter, check that there is continuity between the segments of the commutator.

If there is no continuity between any segment, replace the armature.

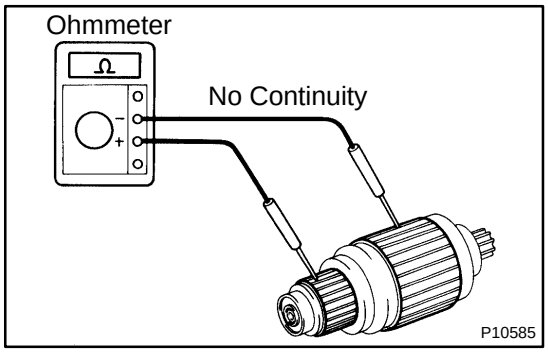

(b) Check the commutator for ground.
Using an ohmmeter, check that there is no continuity between the commutator and armature coil core.

If there is no continuity, replace the armature.

2. INSPECT COMMUTATOR

(a) Check the commutator for the dirty and burnt surfaces.

If the surface is dirty or burnt, correct it with sandpaper (No.400) or on a table.

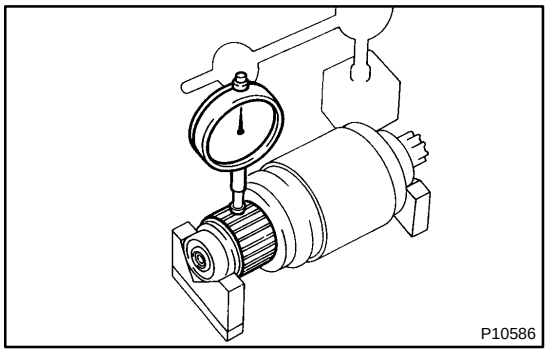

(b) Check for the commutator circle runout.
(1) Place the commutator on V-blocks.
(2) Using a dial gauge, measure the circle runout.
Maximum circle runout: 0.05 mm (0.0020 in.)

If the circle runout is greater than maximum, correct it on a lathe.

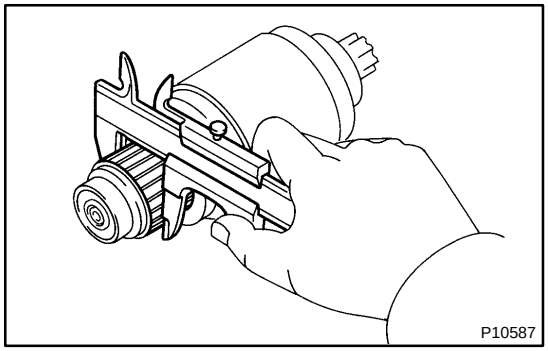

(c) Using a vernier caliper, measure the commutator diameter.
Standard diameter: 30.0 mm (1.181 in.)
Minimum diameter: 29.0 mm (1.412 in.)

If the diameter is less than minimum, replace the armature.

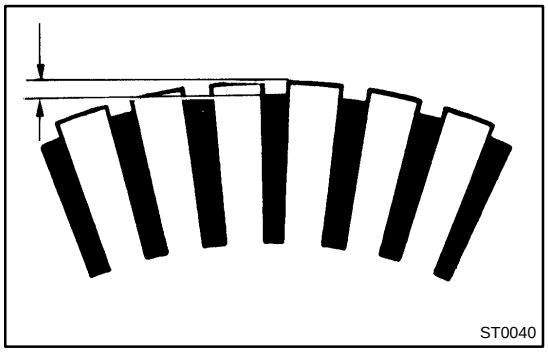

(d) Check that the undercut depth is clean and free of foreign materials. Smooth out the edge.
Standard undercut depth: 0.6 mm (0.024 in.)
Minimum undercut depth: 0.2 mm (0.008 in.)

If the undercut depth is less than minimum, correct it with a hacksaw blade.

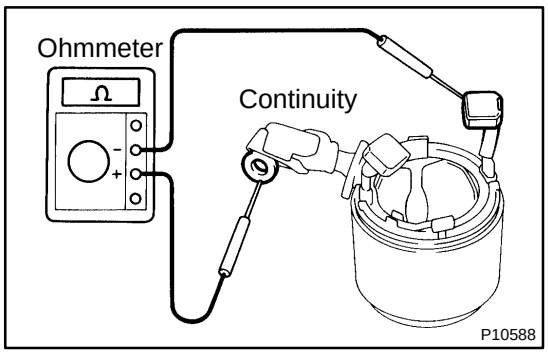

3. INSPECT FIELD COIL

(a) Check the field coil for open circuit.

Using an ohmmeter, check that there is continuity between the lead wire and field coil brush lead.

If there is no continuity, replace the field frame.

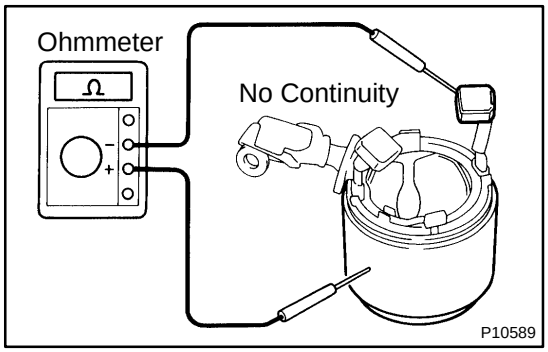

(b) Check the field coil for ground.

Using an ohmmeter, check that there is no continuity between the field coil end and field frame.

If there is continuity, replace the field frame.

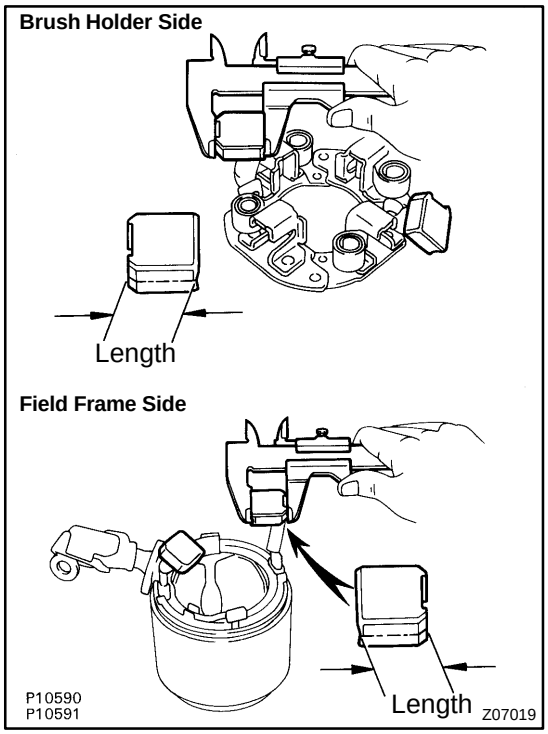

4. INSPECT BRUSHES

Using a vernier caliper, measure the brush length.

Standard length: 15.5 mm (0.610 in.)

Minimum length: 10.0 mm (0.394 in.)

If the length is less than minimum, replace the brush holder and field frame.

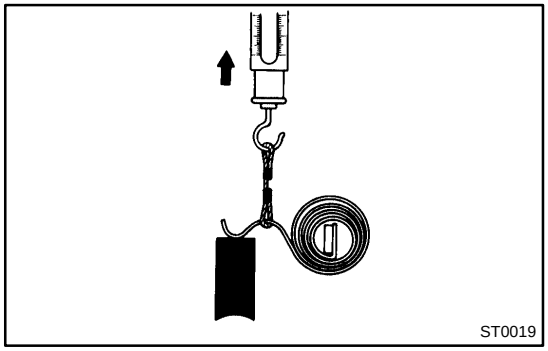

5. INSPECT BRUSH SPRINGS

Check the brush spring load. Take the pull scale reading the instant the brush spring separates from the brush.

Standard spring installed load:

17.6 - 23.5 N (1.8 - 2.4 kgf, 3.9 - 5.3 lbf)

Minimum spring installed load:

11.8 N (1.2 kgf, 2.6 lbf)

If the installed load is less than minimum, replace the brush springs.

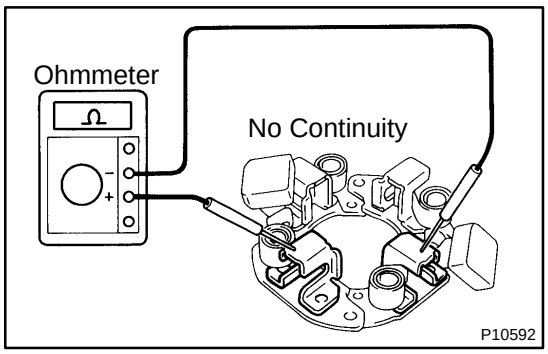

6. INSPECT BRUSH HOLDER

Check the brush holder insulator. Using an ohmmeter, check that there is no continuity between the positive (+) and negative (-) brush holders.

If there is continuity, repair or replace the brush holder.

7. INSPECT CLUTCH AND GEAR

(a) Check the gear teeth on the pinion gear, idle gear and the clutch assembly for wear or damage.

If damaged, replace the gear or clutch assembly.

If damaged, also check the drive plate ring gear for wear or damage.

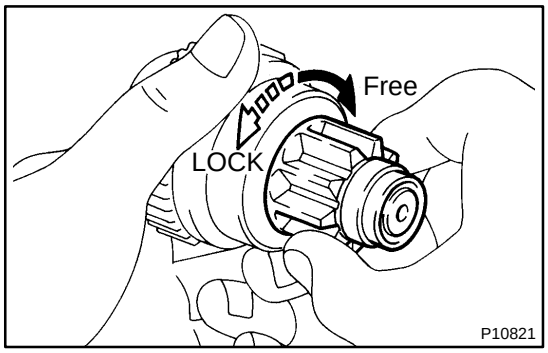

(b) Check the clutch pinion gear.

Rotate the pinion gear counterclockwise, and check that it turns freely. Try to rotate the pinion gear clockwise and check that it locks.

If necessary, replace the clutch assembly.

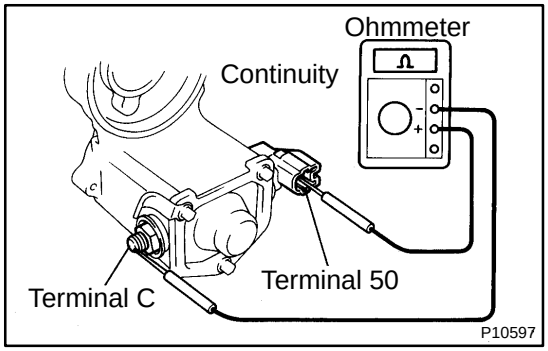

8. INSPECT MAGNETIC SWITCH

(a) Check the pull -in coil for open circuit.

Using an ohmmeter, check that there is continuity between terminals 50 and C.

If there is no continuity, check and replace the magnetic switch.

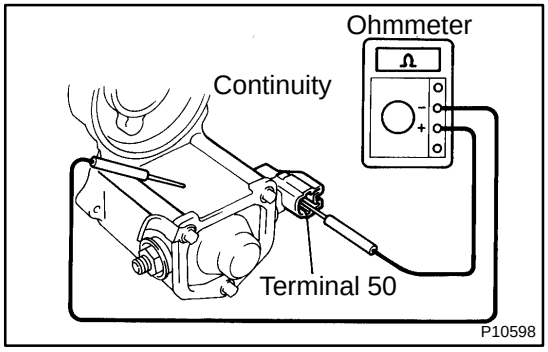

(b) Check the hold-in coil for open circuit.

Using an ohmmeter, check that there is continuity between terminal 50 and the switch body.

If there is no continuity, replace the magnetic switch.

9. INSPECT BEARING

Turn the bearing by hand and while apply inward force.

If resistance is felt or bearing sticks, replace the bearing.

(See page ST-10)

ST04G-01

REPLACEMENT

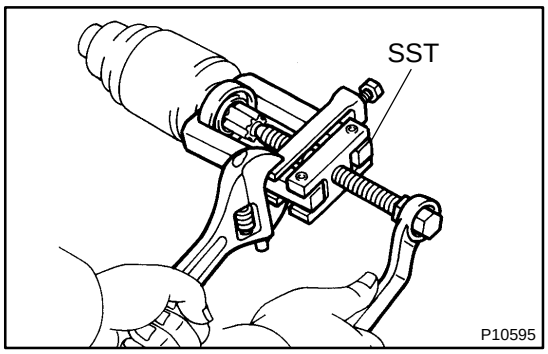

1. REPLACE FRONT BEARING

(a) Using SST, remove the bearing.
SST 09286-4601 1

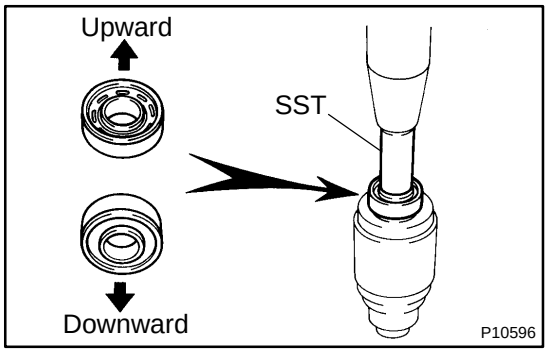

(b) Using SST and a press, press in a new bearing.

NOTICE:

Be careful of the bearing installation direction.

SST 09820-00030

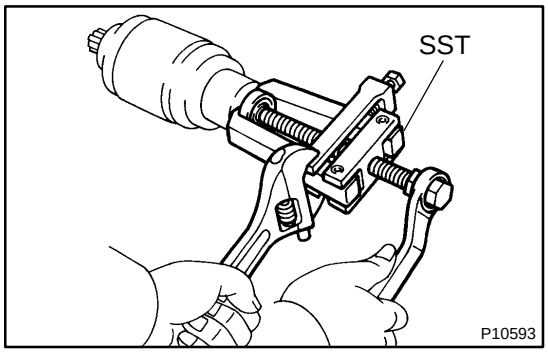

2. REPLACE REAR BEARING

(a) Using SST, remove the bearing.
SST 09286-4601 1

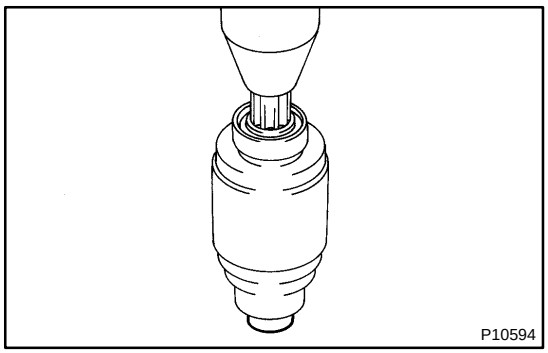

(b) Using a press, press in a new rear bearing.

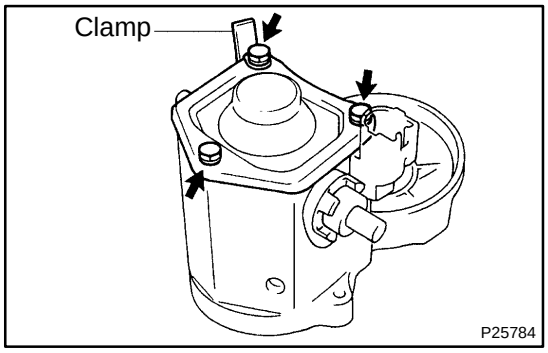

3. REPLACE MAGNETIC SWITCH TERMINAL KIT PARTS

(a) Remove the 3 bolts, clamp, end cover, gasket and plunger.

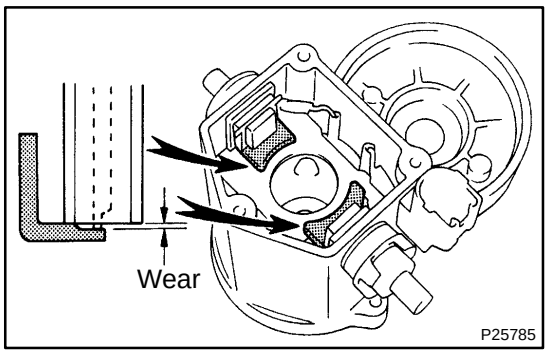

(b) Using vernier calipers, measure the contact plate for depth of wear.

Maximum wear: 0.9 mm (0.035 in.)

If the depth of wear is greater than the maximum, replace the contact plate.

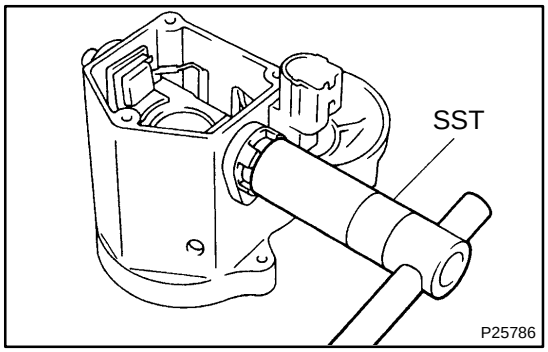

(c) Remove the terminal kit parts.

(1) Using SST, loosen the terminal nuts.

SST 09810-38140

(2) Terminal C:

Remove the terminal nut, wave washer, terminal insulator (outside), O- ring, terminal bolt, contact plate and terminal insulator (inside).

(3) Terminal 30:

Remove the terminal nut, wave washer, terminal insulator (outside), packing, O-ring, terminal bolt, contact plate, terminal insulator (inside) and insulation paper.

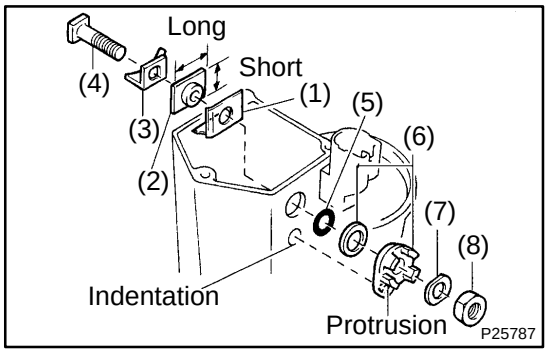

(d) Temporarily install these new terminal 30 kit parts:

(1) Insulation paper
(2) Terminal insulator (inside)
(3) Contact plate
(4) Terminal bolt
(5) O-ring
(6) Packing and terminal insulator (outside)

Install the packing to the terminal insulator, and install them.

HINT:

Match the protrusion of the insulator with the indentation of the housing.

(7) Wave washer
(8) Terminal nut

NOTICE:

Be careful to install the terminal insulators in the correct direction.

(e) Temporarily install these new terminal C kit parts:

(1) Terminal insulator (inside)
(2) Contact plate
(3) Terminal bolt
(4) O-ring
(5) Terminal insulator (outside)
(6) Wave washer
(7) Terminal nut

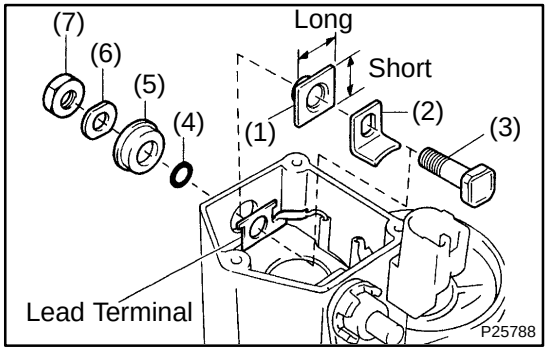

NOTICE:

Be careful to install the terminal insulators in the correct direction.

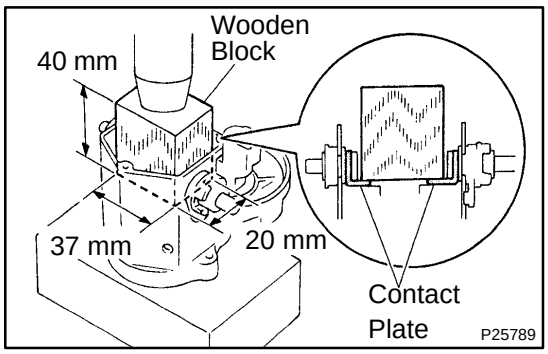

(f) Temporarily tighten the terminal nuts.

(g) Tighten the terminal nut

(1) Put a wooden block on the contact plate and press it down with a hand press.

Dimensions of wooden block:
20 x 37 x 40 mm (0.79 x 1.46 x 1.57 in.)
Press force:
981 N (100 kgf, 221 lbf)

NOTICE:

- **Check the diameter of the hand press ram. Then calculate the gauge pressure of the press when 981 N (100 kgf, 221 lbf) of force is applied.**
  Gauge pressure:

$$(kgf/cm^2) = \frac{100\ kgf}{\left(\frac{\text{Ram diameter (cm)}}{2}\right)^2 \times 3.14\ (\pi)}$$

$$(psi) = \frac{221\ lbf}{\left(\frac{\text{Ram diameter (in.)}}{2}\right)^2 \times 3.14\ (\pi)}$$

  (kPa) = (kgf/cm^2) x 98.1
  (kPa) = (psi) x 6.9

- **If the contact plate is not pressed down with the specified pressure, the contact plate may tilt due to coil deformation or the tightening of the nut.**

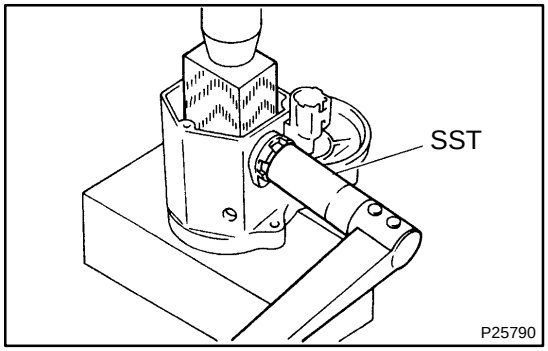

(2) Using SST, tighten the nuts to the specified torque.
SST 09810-38140
Torque: 17 N·m (173 kgf·cm, 13 ft·lbf)

NOTICE:
If the nut is over tightened, it may cause cracks on the inside of the insulator.

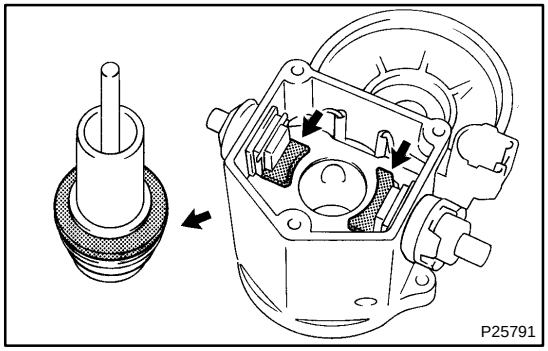

(h) Clean the contact surfaces of the remaining contact plate and plunger with a dry shop rag.

(i) Reinstall the plunger, new gasket, end cover and lead clamp with the 3 bolts.
Torque: 2.5 N·m (26 kgf·cm, 22 in.·lbf)

ST04I-01

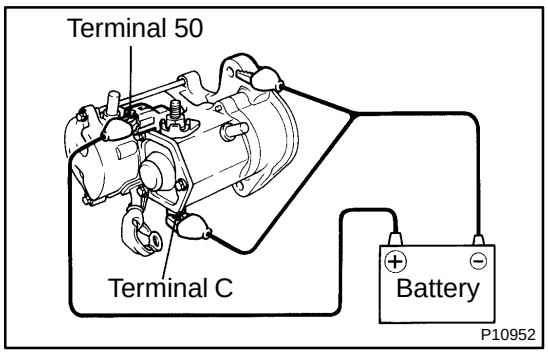

TEST

NOTICE:

These tests must be done within 3 to 5 seconds to avoid burning out the coil.

1. PERFORM PULL-IN TEST

(a) Disconnect the field coil lead wire from terminal C.

(b) Connect the battery to the magnetic switch as shown. Check that the pinion gear moves outward.

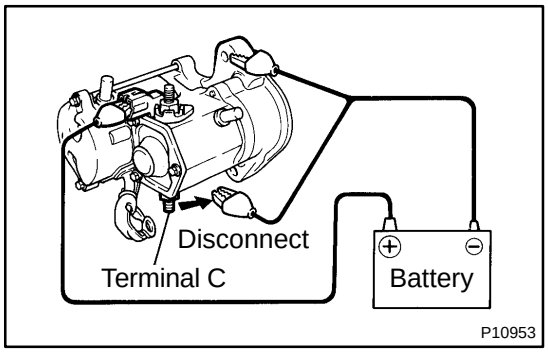

2. PERFORM HOLD-IN TEST

While connected as above with the pinion gear out, disconnect the negative (-) lead from terminal C.

Check that the pinion gear remains out.

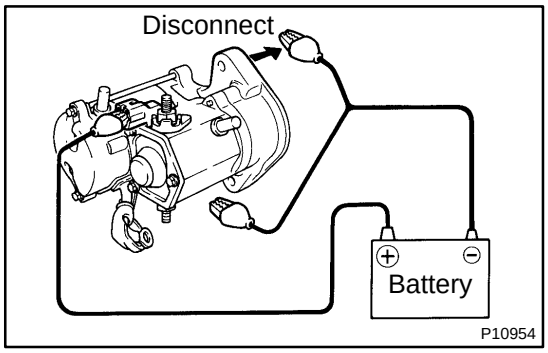

3. INSPECT CLUTCH PINION GEAR RETURN

Disconnect the negative (-) lead from the starter body.

Check that the pinion gear returns inward.

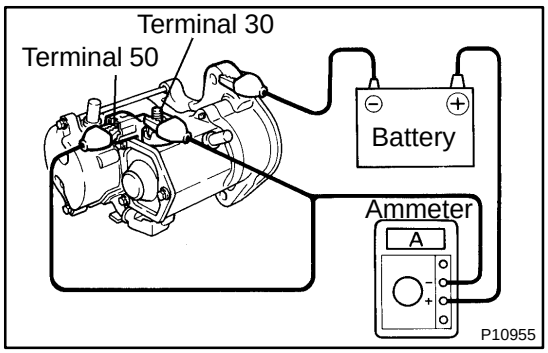

4. PERFORM NO-LOAD PERFORMANCE TEST

(a) Connect the battery and ammeter to the starter as shown.

(b) Check that the starter rotates smoothly and steadily with the pinion gear moving out. Check that the ammeter shows the specified current.

Specified current: 90 A or less at 11.5 V

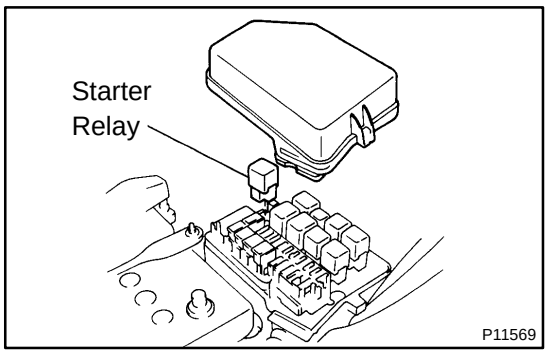

STARTER RELAY

ST04K-01

INSPECTION

1. REMOVE STARTER RELAY (Marking: ST)

LOCATION: In the engine compartment relay box.

Remove the relay box cover and starter relay.

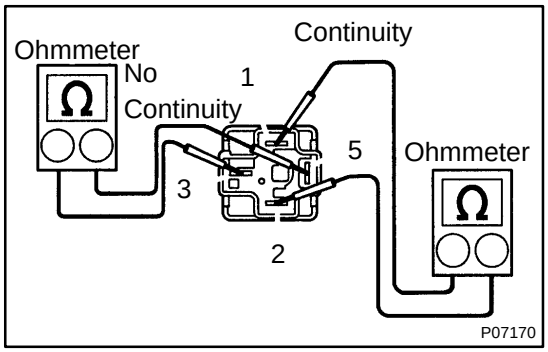

2. INSPECT STARTER RELAY CONTINUITY

(a) Using an ohmmeter, check that there is continuity between terminals 1 and 2.

If there is no continuity, replace the relay.

(b) Check that there is no continuity between terminals 3 and 5.

If there is continuity, replace the relay.

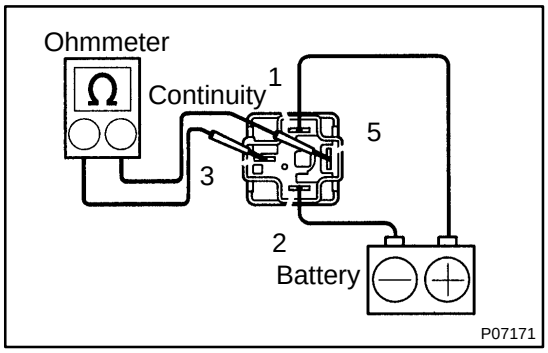

3. INSPECT STARTER RELAY OPERATION

(a) Apply battery positive voltage across terminals 1 and 2.

(b) Using an ohmmeter, check that there is continuity between terminals 3 and 5.

If there is no continuity, replace the relay.

4. REINSTALL STARTER RELAY

TROUBLESHOOTING

SR13T-01

PROBLEM SYMPTOMS TABLE

Use the table below to help you find the cause of the problem. The numbers indicate the priority of the likely cause of the problem. Check each part in order. If necessary, repair or replace these parts.

Symptom	Suspect Area	See page
Hard steering	1. Tires (Improperly inflated)	SA-2
	2. Power steering fluid level (Low)	SR-4
	3. Drive belt (Loose)	-
	4. Front wheel alignment (Incorrect)	SA-3
	5. Steering system joints (Worn)	-
	6. Suspension arm ball joints (Worn)	SA-30 SA-35
	7. Steering column (Binding)	-
	8. Power steering gear	-
	9. PPS system	SR-54
Poor return	1. Tires (Improperly inflated)	SA-2
	2. Front wheel alignment (Incorrect)	SA-3
	3. Steering column (Binding)	-
	4. Power steering gear	-
Excessive play	1. Steering system joints (Worn)	-
	2. Suspension arm ball joints (Worn)	SA-30 SA-35
	3. Intermediate shaft, Universal joint, Sliding yoke (Worn)	-
	4. Front wheel bearing (Worn)	SA-12
	5. Power steering gear	-
	6. PPS system	SR-54
Abnormal noise	1. Power steering fluid level (Low)	SR-4
	2. Steering system joints (Worn)	-
	3. Power steering gear	-

POWER STEERING FLUID

SR13U-01

BLEEDING

1. CHECK FLUID LEVEL
(See page SR-4)

2. JACK UP FRONT OF VEHICLE AND SUPPORT IT WITH STANDS

3. TURN STEERING WHEEL

With the engine stopped, turn the steering wheel slowly from lock to lock several times.

NOTICE:

Take care that some fluid remains in the oil reservoir.

4. LOWER VEHICLE

5. START ENGINE

Run the engine at idle for a few minutes.

6. TURN STEERING WHEEL

(a) With the engine at idling, turn the steering wheel to left or right full lock and keep it there for 2-3 seconds, then turn the wheel to the opposite full lock and keep it there for 2-3 seconds.

(b) Repeat (a) several times.

7. STOP ENGINE

8. CHECK FOR FOAMING OR EMULSIFICATION

If the system has to be bled twice specifically because of foaming or emulsification, check for fluid leaks in the system.

9. CHECK FLUID LEVEL
(See page SR-4)

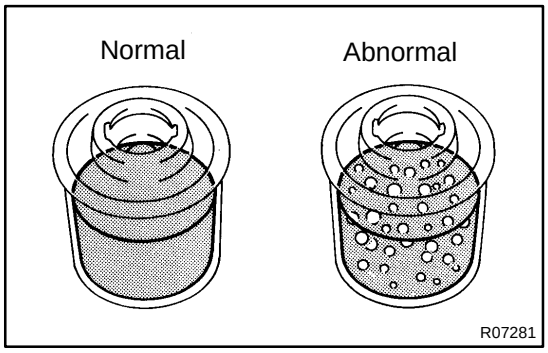

SR13V-01

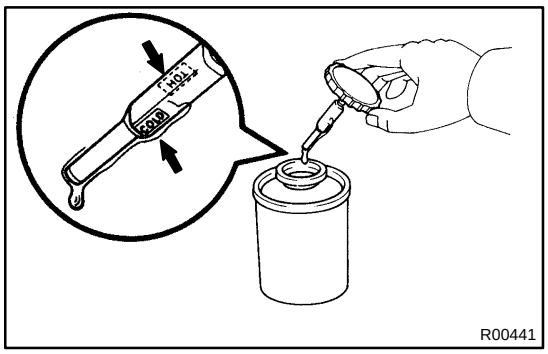

INSPECTION

1. CHECK FLUID LEVEL

(a) Keep the vehicle level.

With the engine stopped, check the fluid level in the oil reservoir.

If necessary, add fluid.

Fluid: ATF DEXRON® II or III

HINT:

Check that the fluid level is within the HOT LEVEL range on the dipstick of the reservoir cap. If the fluid is cold, check that it is within the COLD LEVEL range.

(b) Start the engine and run it at idle.

(c) Turn the steering wheel from lock to lock several times to boost fluid temperature.

Fluid temperature: 80˚C (176˚F)

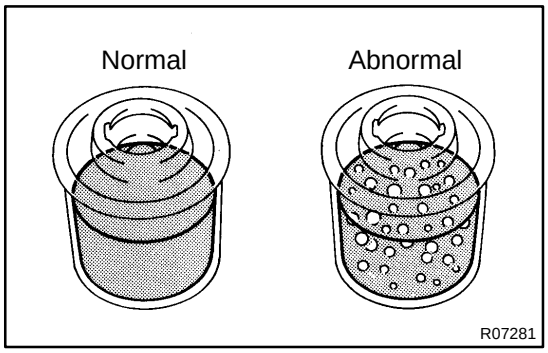

(d) Check for foaming or emulsification.

If there is foaming or emulsification, bleed power steering system.

(See page SR-3)

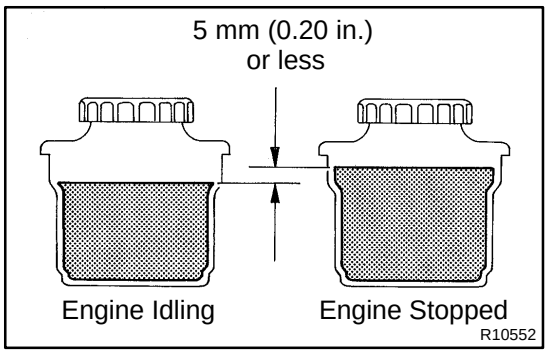

(e) With the engine idling, measure the fluid level in the oil reservoir.

(f) Stop the engine.

(g) Wait a few minutes and remeasure the fluid level in the reservoir.

Maximum fluid level rise: 5mm (0.20 in.)

If a problem is found, bleed power steering system.

(See page SR-3)

(h) Check the fluid level.

2. CHECK STEERING FLUID PRESSURE

(a) Disconnect the pressure feed tube from the PS vane pump.
(See page SR-26)

(b) Connect SST over a new gasket, as shown below.
SST 09640-10010 (09641-01010, 09641-01030, 09641-01060)

NOTICE:
Check that the valve of the SST is in the open position.

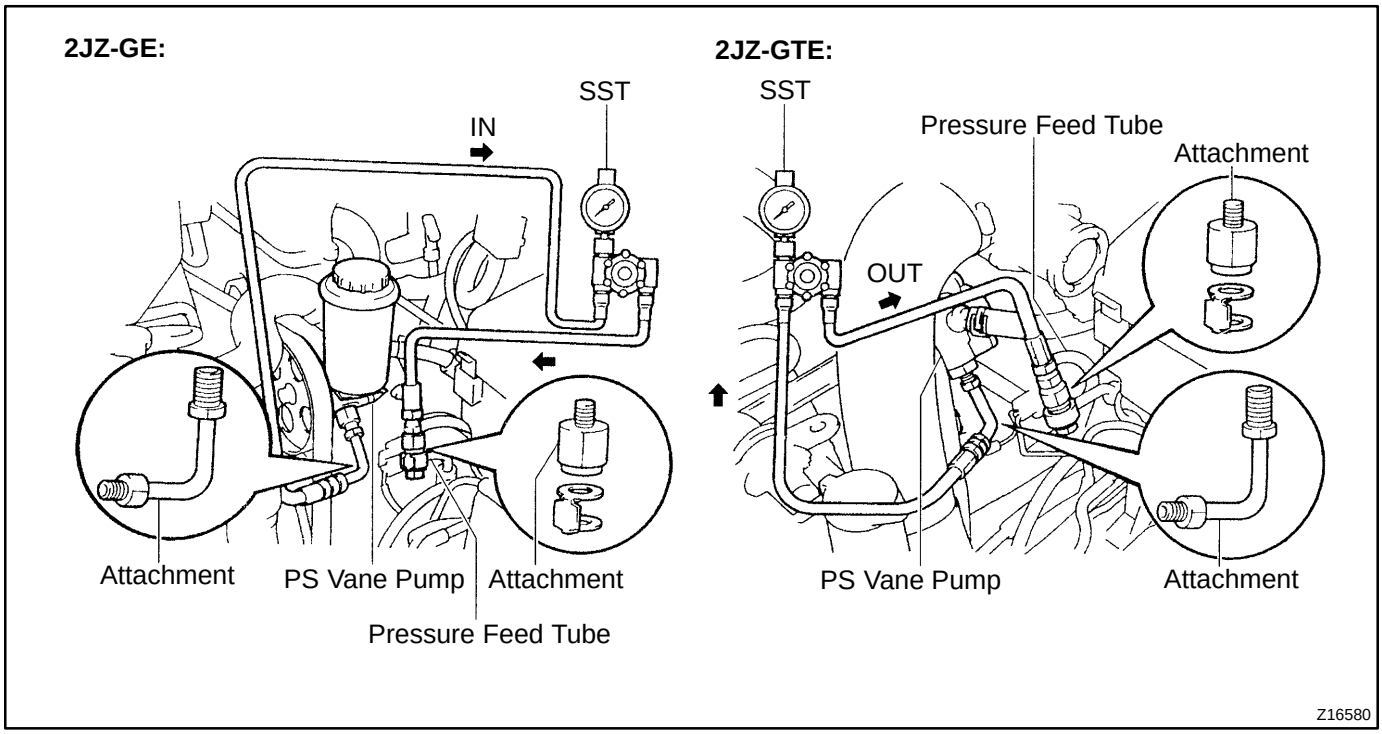

(c) Bleed the power steering system.
(See page SR-3)

(d) Start the engine and run it at idle.

(e) Turn the steering wheel from lock to lock several times to boost fluid temperature.
Fluid temperature: 80˚C (176˚F)

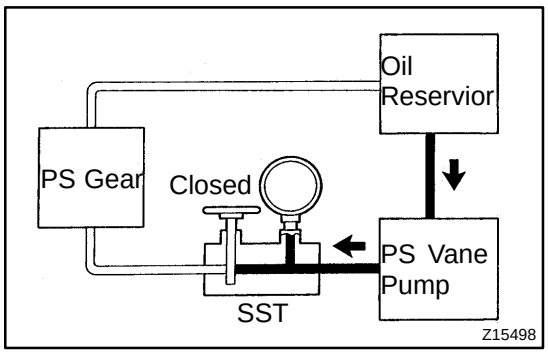

(f) With the engine idling, close the valve of the SST and observe the reading on the SST.
Minimum fluid pressure:
7,355 kPa (75 kgf.cm^2, 1,067 psi)

NOTICE:
- **Do not keep the valve closed for more than 10 seconds.**
- **Do not let the fluid temperature become too high.**

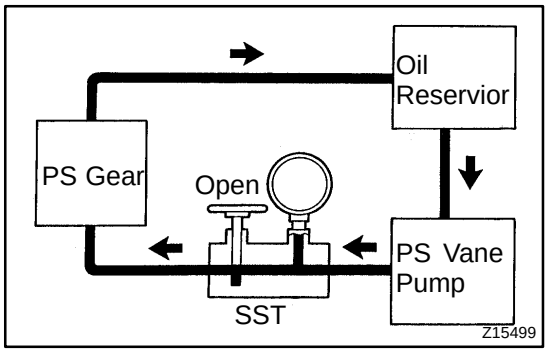

(g) With the engine idling, open the valve fully.
(h) Measure the fluid pressure at engine speeds of 1,000 rpm and 3,000 rpm.
Difference fluid pressure:
490 kPa (5 kgf.cm^2, 71 psi) or less

NOTICE:
Do not turn the steering wheel.

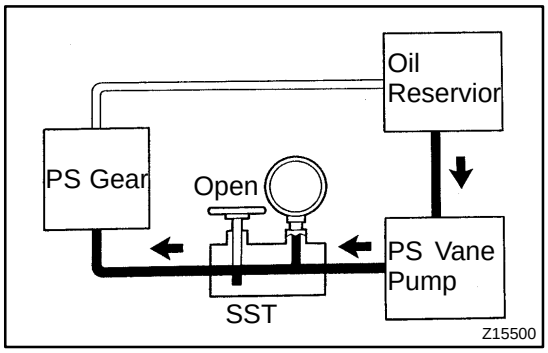

(i) With the engine idling and valve fully opened, turn the wheel to full lock.
Minimum fluid pressure:
7,355 kpa (75 kgf,cm^2, 1,067 psi)

NOTICE:
- **Do not maintain lock position for more than 10 seconds.**
- **Do not let the fluid temperature become too high.**

(j) Disconnect the SST.
(k) Connect the pressure feed tube.
(See page SR-34)
(l) Bleed the power steering system.
(See page SR-3)

2JZ-GE:

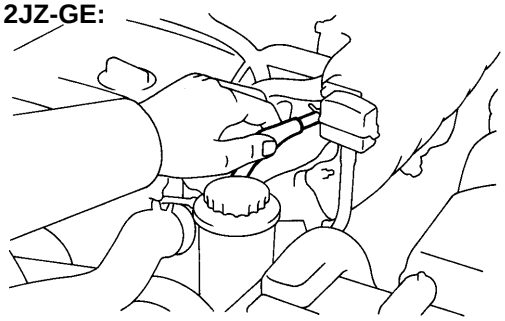

2JZ-GTE:

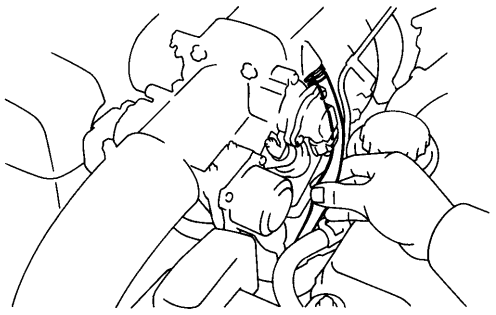

Z13450

AIR CONTROL VALVE

SR0CK-01

INSPECTION

CHECK IDLE-UP

(a) Turn the air conditioner switch off.
(b) Start the engine and run it at idle.
(c) Fully turn the steering wheel.
(d) Check that the engine speed decreases when the vacuum hose of the air control valve is pinched.
(e) Check that the engine speed increases when the hose is released.

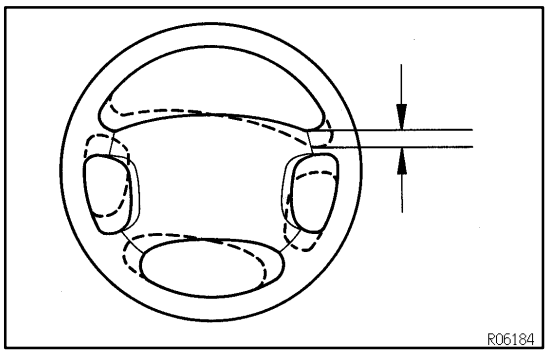

STEERING WHEEL

SR13W-01

INSPECTION

1. CHECK STEERING WHEEL FREEPLAY

With the vehicle stopped and tires pointed straight ahead, rock the steering wheel gently back and forth with light finger pressure.

Freeplay should not exceed the maximum.

Maximum freeplay: 30 mm (1.18 in.)

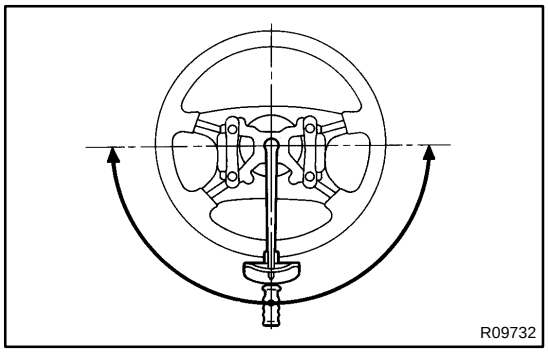

2. CHECK STEERING EFFORT

(a) Center the steering wheel.

(b) Remove the steering wheel pad.
(See page SR-1 1)

(c) Start the engine and run it at idle.

(d) Measure the steering effort in both directions.

Reference (Maximum): 6.9 N·m (70 kgf·cm, 61 in.·lbf)

If steering effort is excessive, repair the power steering unit.

HINT:

Be sure to consider the tire type, pressure and contact surface before making your diagnosis.

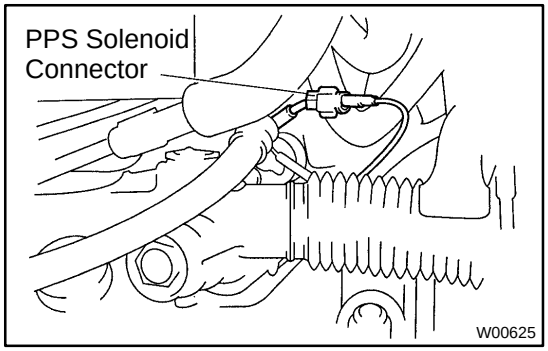

(e) Disconnect the PPS solenoid connector.

(f) Measure the steering effort in both directions and check that the steering effort exceeds the reference value in (d), and that the power assist is operating.

If steering effort is not heavier than (d), check the solenoid.

(g) Connect the connector.

(h) Torque the steering wheel set nut.

Torque: 35 N·m (360 kgf·cm, 26 ft·lbf)

(i) Install the steering wheel pad.
(See page SR-21)

TILT STEERING COLUMN

SR13X-01

COMPONENTS

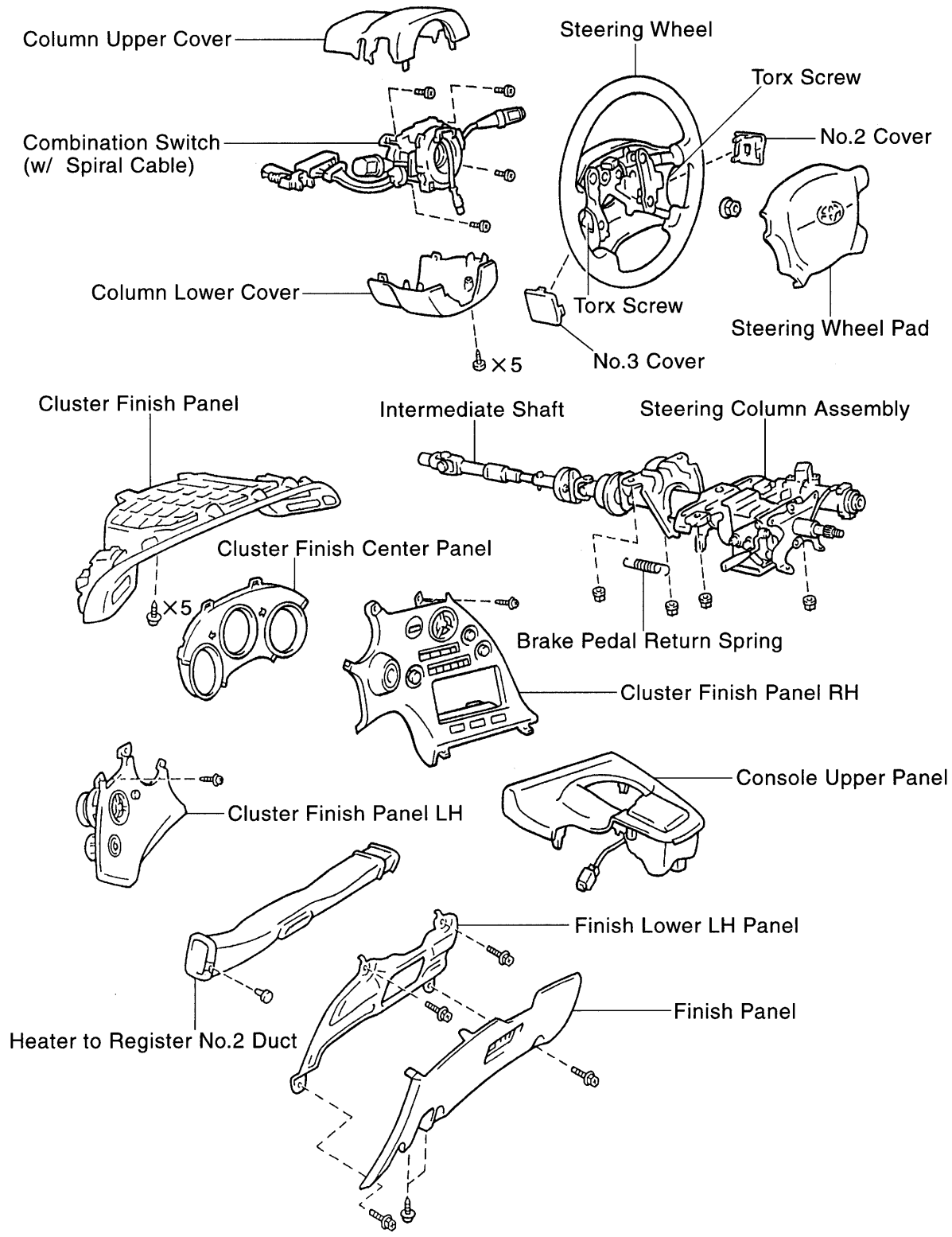

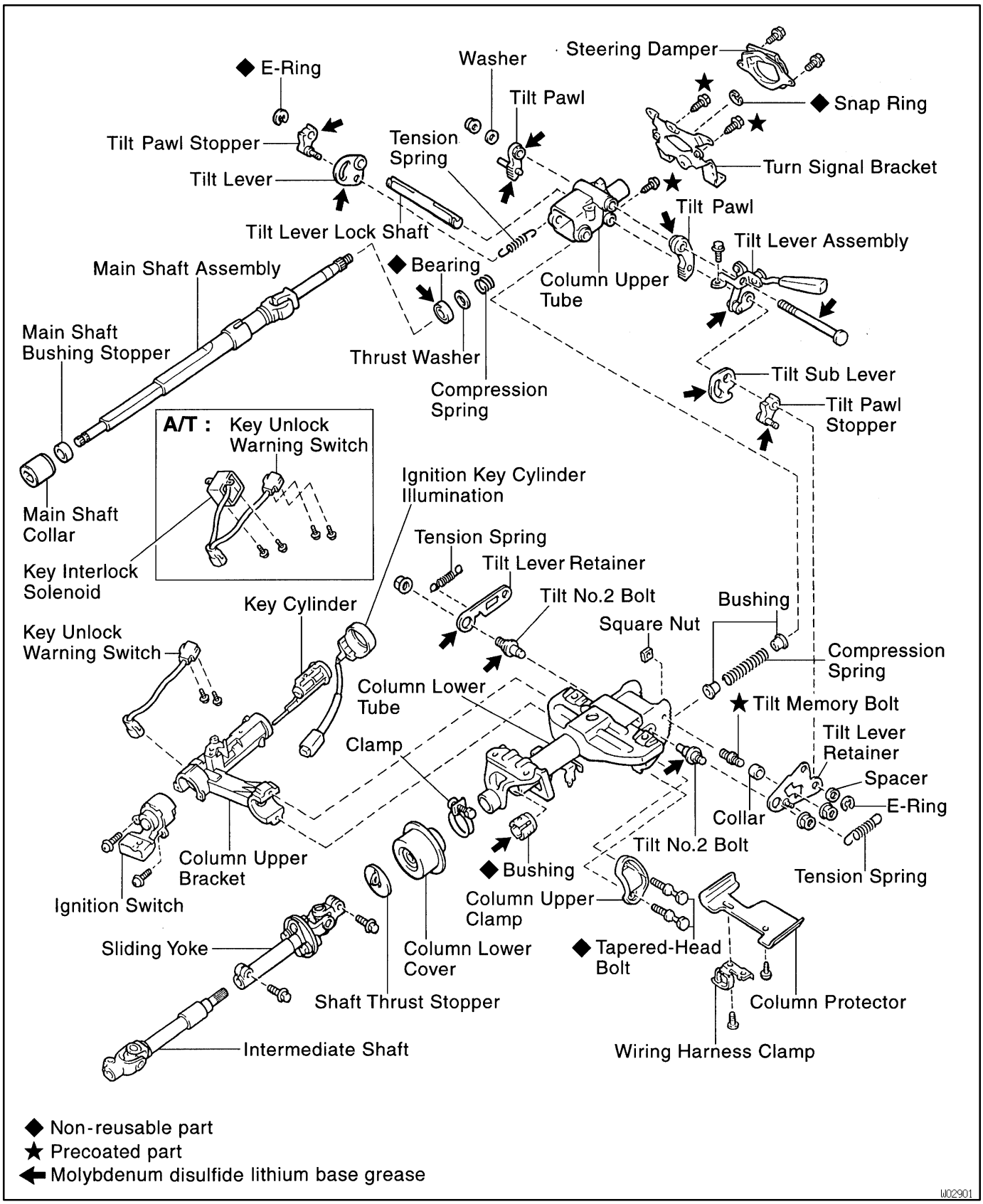
◆ E-Ring
Washer
Steering Damper
Tilt Pawl
◆ Snap Ring
Tilt Pawl Stopper
Tension Spring
Tilt Lever
Turn Signal Bracket
Tilt Lever Lock Shaft
Tilt Pawl
Tilt Lever Assembly
Main Shaft Assembly
◆ Bearing
Column Upper Tube
Main Shaft Bushing Stopper
Thrust Washer
Compression Spring
Tilt Sub Lever
Tilt Pawl Stopper
A/T : Key Unlock Warning Switch
Ignition Key Cylinder Illumination
Main Shaft Collar
Tension Spring
Tilt Lever Retainer
Key Interlock Solenoid
Key Cylinder
Tilt No.2 Bolt
Bushing
Square Nut
Key Unlock Warning Switch
Compression Spring
Column Lower Tube
★ Tilt Memory Bolt
Clamp
Tilt Lever Retainer
Spacer
E-Ring
Collar
Column Upper Bracket
Tilt No.2 Bolt
Tension Spring
◆ Bushing
Ignition Switch
Column Upper Clamp
Sliding Yoke
Column Lower Cover
◆ Tapered-Head Bolt
Column Protector
Shaft Thrust Stopper
Intermediate Shaft
Wiring Harness Clamp
◆ Non-reusable part
★ Precoated part
Molybdenum disulfide lithium base grease
W02901

SR13Y-01

REMOVAL

1. REMOVE STEERING WHEEL PAD

NOTICE:

If the airbag connector is disconnected with the ignition switch at ON or ACC, DTCs will be recorded. Never use airbag parts from another vehicle. When replacing parts, replace with new parts.

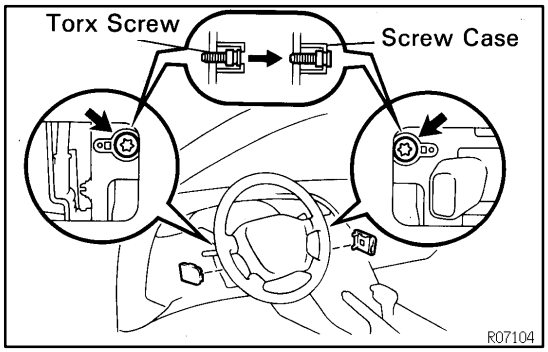

(a) Place the front wheels facing straight ahead.

(b) Using a torx socket wrench, loosen the 2 torx screws.

HINT:

Loosen the 2 screws until the groove along the screw circumference catches on the screw case.

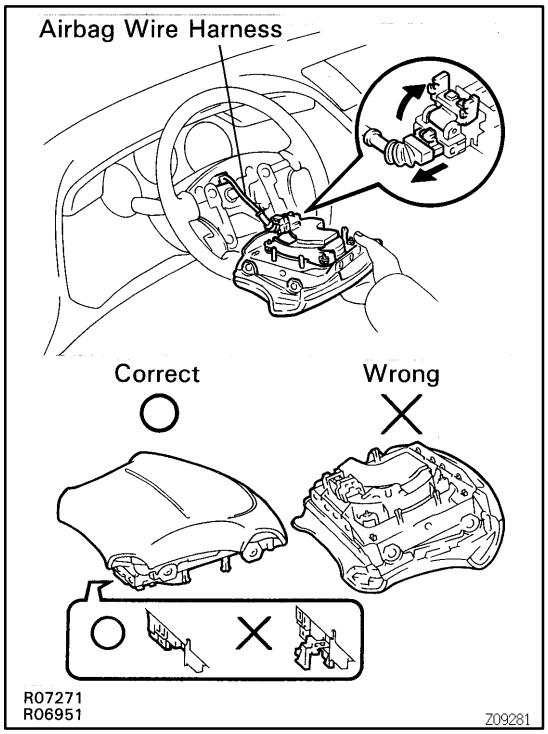

(c) Pull the pad out from the steering wheel and disconnect the airbag connector.

CAUTION:

When storing the pad, keep the upper surface of the pad facing upward. Never disassemble the pad.

NOTICE:

When removing the pad, take care not to pull the airbag wire harness.

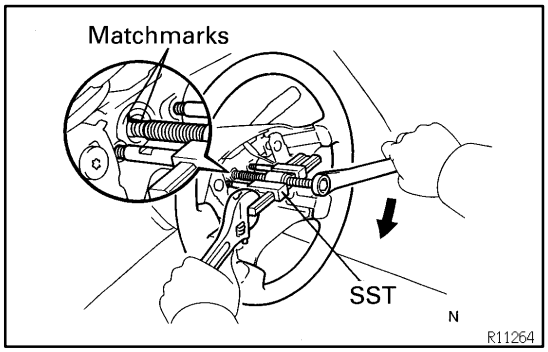

2. REMOVE STEERING WHEEL

(a) Disconnect the connector.

(b) Remove the wheel set nut.

(c) Place matchmarks on the wheel and main shaft.

(d) Using SST, remove the wheel.

SST 09950-50010 (09951-05010, 09952-05010, 09953-05020, 09954-05020)

3. REMOVE UPPER AND LOWER COLUMN COVERS

Remove 5 screws.

4. REMOVE THESE PARTS:
(See page BO-54)

(a) Console upper panel
(b) Cluster finish panel
(c) Cluster finish panel RH
(d) Cluster finish panel LH
(e) Cluster finish center panel
(f) Finish panel
(g) Finish lower LH panel
(h) Heater to register No.2 duct

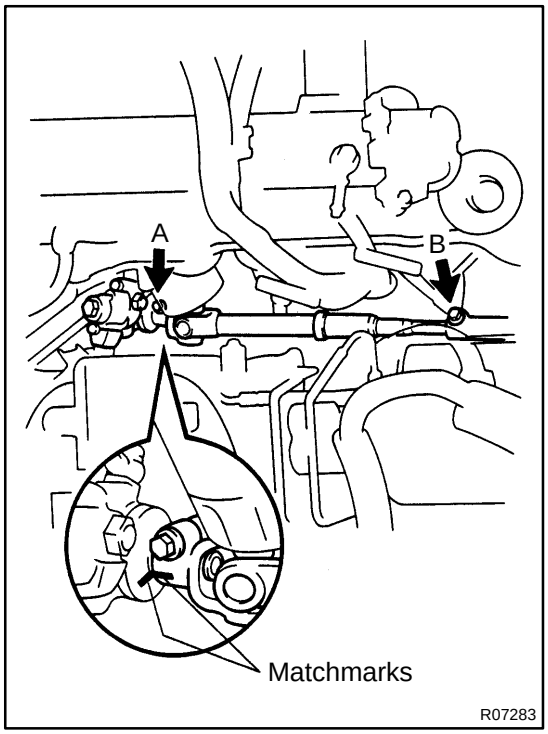

5. REMOVE COMBINATION SWITCH WITH SPIRAL CABLE

(a) Remove the 4 screws.
(b) Disconnect the connectors and airbag connector.

6. REMOVE SPIRAL CABLE
(See page BE-16)

NOTICE:
Do not disassemble the cable or apply oil to it.

7. DISCONNECT INTERMEDIATE SHAFT

(a) Place matchmarks on the intermediate shaft and control valve shaft.
(b) Loosen bolt B and remove bolt A.

8. REMOVE STEERING COLUMN ASSEMBLY

(a) Remove the brake pedal return spring.
(b) Disconnect the connectors.
(c) Loosen the hole cover clamp.
(d) Remove the 4 column assembly set nuts.

SR13Z-01

DISASSEMBLY

NOTICE:

When using a vise, do not overtighten it.

1. REMOVE IGNITION KEY CYLINDER ILLUMINATION

2. REMOVE INTERMEDIATE SHAFT

Remove the bolt.

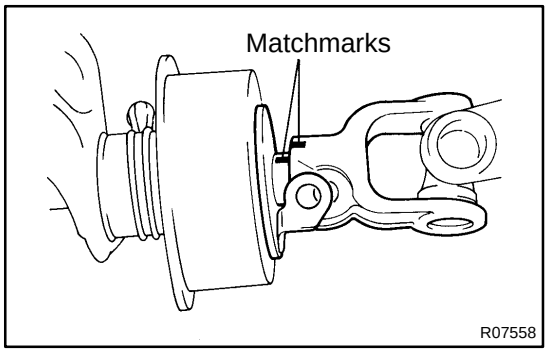

3. REMOVE SLIDING YOKE AND SHAFT THRUST STOPPER

(a) Remove the bolt.

(b) Shift the stopper.

(c) Place matchmarks on the sliding yoke and main shaft.

4. REMOVE COLUMN LOWER COVER

Loosen the clamp.

5. REMOVE COLUMN UPPER BRACKET AND COLUMN UPPER CLAMP

(a) Using a centering punch, mark the center of the 2 tapered-head bolts.

(b) Using a 4 - 5 mm (0.16 - 0.20 in.) drill, drill into the 2 tapered-head bolts.

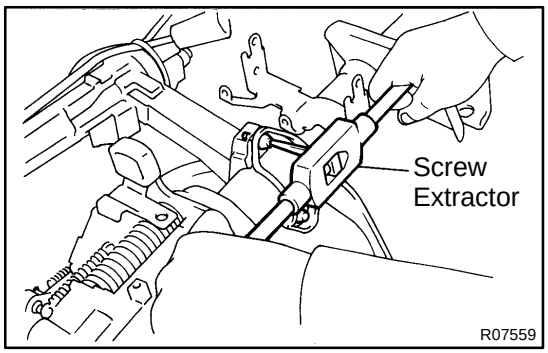

(c) Using a screw extractor, remove the 2 tapered-head bolts.

6. REMOVE WIRING HARNESS CLAMP AND COLUMN PROTECTOR

Remove the 2 screws.

7. REMOVE COMPRESSION SPRING

(a) Using a torx socket wrench, remove the screw.

(b) Remove the 2 bushings from the spring.

8. REMOVE 3 TENSION SPRINGS

9. REMOVE STEERING DAMPER

Remove the 2 bolts.

10. REMOVE TURN SIGNAL BRACKET

Remove the 2 bolts.

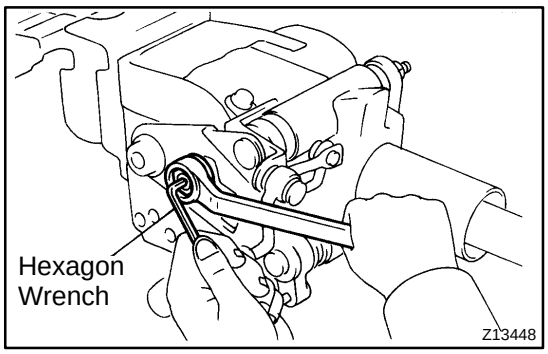

11. Tilt Lever Side:
REMOVE TILT LEVER RETAINER

Remove the nut and E-ring.

12. Tilt Sub Lever Side:
REMOVE TILT LEVER RETAINER

(a) Using a hexagon wrench (4 mm) to hold the tilt memory bolt, remove the nut.
(b) Remove the nut, washer and bolt.
(c) Remove the nut, E-ring and spacer.
(d) Remove the collar.
(e) Temporarily install the bolt, washer and nut.

13. REMOVE 2 TILT PAWL STOPPERS

14. REMOVE 2 TILT PAWLS

(a) Remove the bolt, nut and washer.
(b) Remove the tilt lever assembly set bolt.

15. REMOVE TILT LEVER, TILT SUB LEVER, TILT LEVER ASSEMBLY AND TILT LEVER LOCK SHAFT

16. REMOVE TILT MEMORY BOLT AND SQUARE NUT

Using a hexagon wrench (4 mm), remove the bolt.

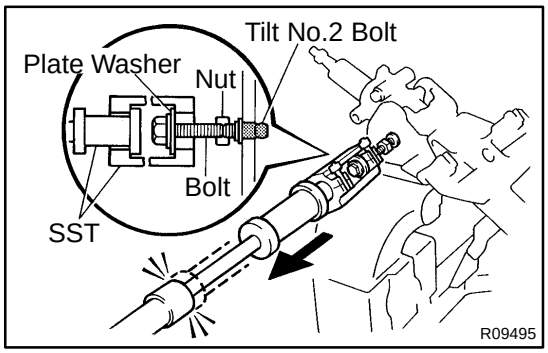

17. REMOVE COLUMN UPPER TUBE WITH MAIN SHAFT ASSEMBLY

(a) Set SST, the nut (10 mm nominal diameter, 1.25 mm pitch), plate washer (36 mm outer diameter) and bolt (10 mm nominal diameter, 1.25 mm pitch, 50 mm length) to the tilt No.2 bolt, as shown.
SST 09910-00015 (09911-0001 1, 09912-00010)
Reference:
Nut 90170-10004
Plate washer 90201-10201
Bolt 91111-51050
(b) Remove the 2 tilt No.2 bolts by using the sliding hammer on SST.
(c) Remove the upper tube with the shaft assembly from the column lower tube.

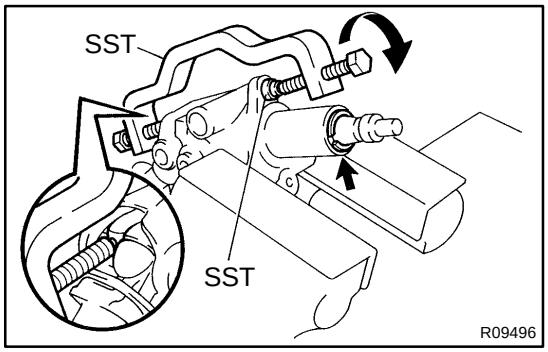

18. REMOVE MAIN SHAFT ASSEMBLY

(a) Using SST, compress the compression spring.
SST 09950-40010 (09957-04010, 09958-04010)

NOTICE:

Do not bend the universal joint of the main shaft assembly more than 20˚.

(b) Using a snap ring expander, remove the snap ring.
(c) Remove the main shaft assembly from the upper tube.
(d) Remove the compression spring, thrust collar and bearing from the main shaft.

19. REMOVE MAIN SHAFT COLLAR AND MAIN SHAFT BUSHING STOPPER

SR140-01

INSPECTION

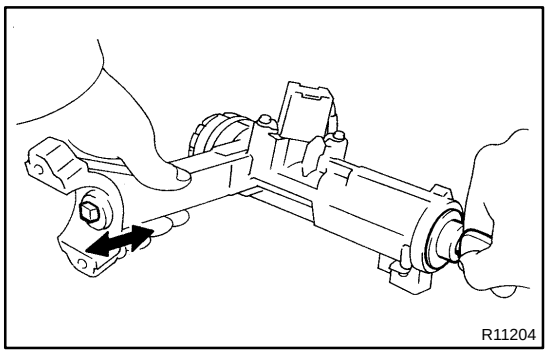

1. INSPECT COLUMN UPPER BRACKET

Check that the steering lock mechanism operates properly.

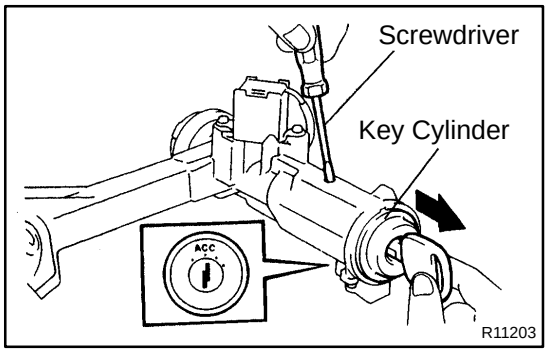

2. IF NECESSARY, REPLACE KEY CYLINDER

(a) Place the ignition key at the ACC position.

(b) Push down the stop pin with a screwdriver and pull out the key cylinder.

(c) Install a new key cylinder.

HINT:

Make sure the ignition key is at the ACC position.

3. INSPECT IGNITION SWITCH

(See page BE-13)

4. IF NECESSARY, REPLACE IGNITION SWITCH

(a) Remove the 2 screws.

(b) Install new switch with the 2 screws.

5. INSPECT KEY UNLOCK WARNING SWITCH

(See page BE-13)

6. A/T:

INSPECT KEY INTERLOCK SOLENOID

(See page AT-17 , AT-15)

7. IF NECESSARY, REPLACE KEY UNLOCK WARNING SWITCH

(a) Remove the 2 screws.

(b) Install a new switch with the 2 screws.

8. A/T:

IF NECESSARY, REPLACE KEY INTERLOCK SOLENOID WITH KEY UNLOCK WARNING SWITCH

(a) Remove the 4 screws.

(b) Install a new solenoid and warning switch with the 4 screws.

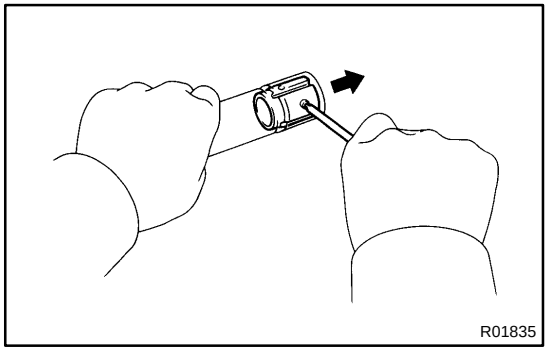

9. IF NECESSARY, REPLACE BUSHING

(a) Using a screwdriver, depress the 3 projections on the busing and remove the bushing from the column lower tube.

(b) Align the projections on a new bushing with the holes in the lower tube. Install the bushing until the projections are firmly engaged in the holes in the lower tube.

SR141-01

REASSEMBLY

NOTICE:

When using a vise, do not overtighten it.

1. **COAT MOLYBDENUM DISULFIDE LITHIUM BASE GREASE**
   (See page SR-9)
2. **INSTALL MAIN SHAFT BUSHING STOPPER AND MAIN SHAFT COLLAR**

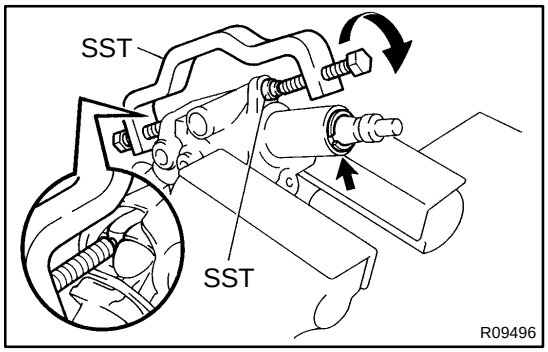

3. **INSTALL MAIN SHAFT ASSEMBLY**

(a) Install a new bearing.

(b) Install the thrust collar and compression spring to the shaft assembly.

(c) Install the main shaft into the column upper tube.

(d) Using SST, compress the compression spring.
SST 09950-40010 (09957-04010, 09958-04010)

NOTICE:

Do not bend the universal joint of the main shaft assembly more than 20˚.

(e) Using a snap ring expander, install a new snap ring.

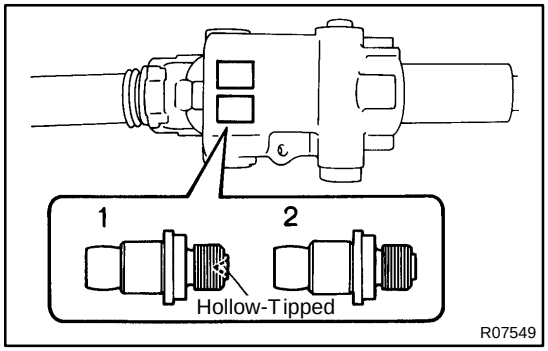

4. **SELECT 2 TILT NO.2 BOLTS**

Select the bolt with the hollow-tipped thread end when the column upper tube mark is 1, and the bolt with the plain thread end when the mark is 2.

NOTICE:

Select the bolt type to match each number marked in the squares on the upper tube.

5. **INSTALL COLUMN UPPER TUBE WITH MAIN SHAFT ASSEMBLY**

(a) Install the upper tube with the shaft assembly into the lower tube.

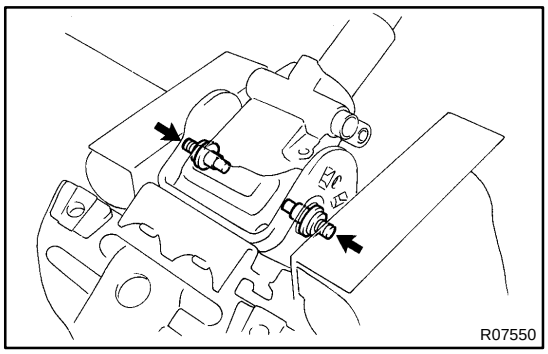

(b) Using a vise, press in the 2 tilt No.2 bolts.

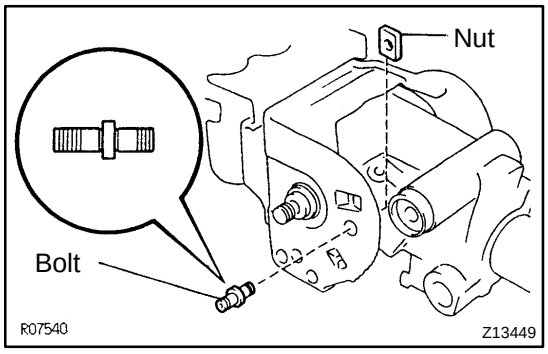

6. INSTALL TILT MEMORY BOLT AND SQUARE NUT

(a) Apply sealant to 2 or 3 threads of the bolt.
Sealant:
Part No. 08833-00080, THREE BOND 1344, LOCTITE 242 or equivalent.

(b) Using a hexagon wrench (4 mm), install the shorter side of the bolt to the nut.
Torque: 6.4 N·m (65 kgf·cm, 56 in.·lbf)

7. INSTALL TILT LEVER LOCK SHAFT, TILT LEVER ASSEMBLY, TILT SUB LEVER AND TILT LEVER

Temporarily tighten the tilt lever assembly set bolt.

8. INSTALL 2 TILT PAWLS

(a) Temporarily install the bolt, washer and nut.

HINT:
Install the pin of the pawl into the long hole of the tilt lever / tilt sub lever.

(b) Torque the tilt lever assembly set bolt.
Torque: 4.7 N·m (48 kgf·cm, 42 in.·lbf)

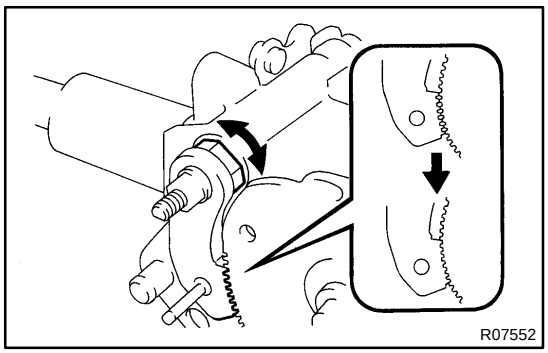

9. ENGAGE AND ADJUST 2 TILT PAWLS

(a) Engage the tilt sub lever side pawl to the center of the ratchet.

(b) Using a spanner (17 mm), while turning the collar, completely engage the tilt lever side pawl to the ratchet.

NOTICE:

- **Do not turn the collar after the tilt lever side pawl is engaged.**
- **Keep the bolt and nut temporarily tightened.**

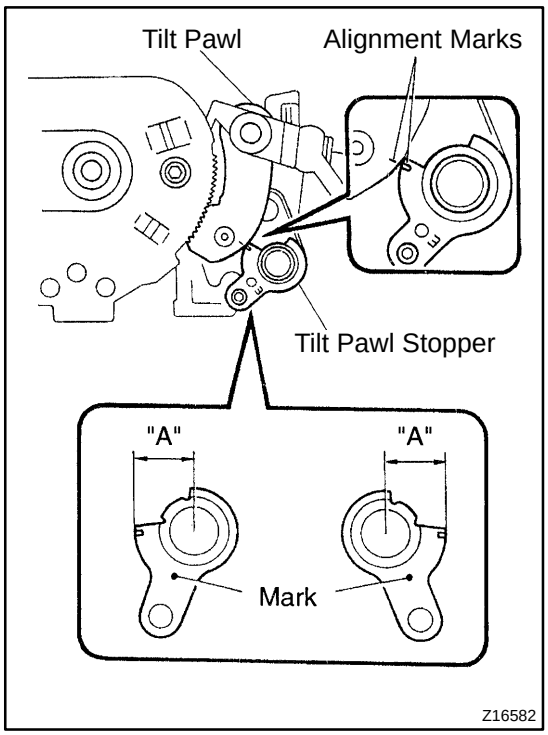

10. SELECT 2 TILT PAWL STOPPERS

(a) With the tilt pawl and ratchet engaged, install the stopper.

(b) Check that the alignment marks on the stopper and pawl align when the stopper is lightly rotated to the pawl side.

(c) If the alignment marks do not align, select pawl stoppers according to the following table.

Tilt sub lever side	Tilt lever side	Dimension "A" mm (in.)
1	A	12.68 - 12.74 (0.4992 - 0.5016)
2	B	12.61 - 12.67 (0.4965 - 0.4988)
3	C	12.54 - 12.60 (0.4937 - 0.4961)
4	D	12.47 - 12.53 (0.4909 - 0.4933)
5	E	12.40 - 12.46 (0.4882 - 0.4906)
6	F	12.33 - 12.39 (0.4854 - 0.4878)
7	G	12.26 - 12.32 (0.4827 - 0.4850)

(d) After selecting the stopper, check that on both sides the pawl and ratchet are fully engaged.

11. INSTALL 2 TILT PAWL STOPPERS

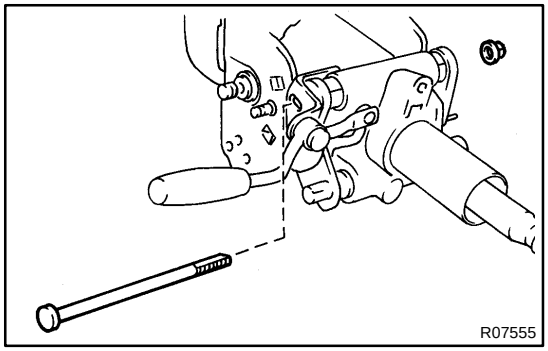

12. Tilt Sub Lever Side:
INSTALL TILT LEVER RETAINER

(a) Remove the bolt and nut.

NOTICE:

Take care not to turn the collar of the tilt sub lever side pawl.

(b) Install the collar to the tilt memory bolt.

(c) Install the retainer.

(d) Install the bolt and washer, and torque the nut.

HINT:

Install the bolt so that the groove in the bolt shaft faces upward.

Torque: 5.9 N·m (60 kgf·cm, 52 in.·lbf)

(e) Torque the nut of the tilt No.2 bolt side.

Torque: 15 N·m (150 kgf·cm, 11 ft·lbf)

(f) Torque the nut of the memory bolt side.

Torque: 5.9 N·m (60 kgf·cm, 52 in.·lbf)

(g) Install the spacer and a new E-ring.

13. Tilt Lever Side:
INSTALL TILT LEVER RETAINER

(a) Torque the nut.

Torque: 15 N·m (150 kgf·cm, 11 ft·lbf)

(b) Install a new E-ring.

14. INSTALL TURN SIGNAL BRACKET

(a) Apply sealant to 2 or 3 threads of the 2 bolts.
Sealant:
Part No. 08833-00080, THREE BOND 1344, LOCTITE 242 or equivalent.

(b) Torque the 2 bolts.
Torque: 8.8 N·m (90 kgf·cm, 78 in.·lbf)

15. INSTALL STEERING DAMPER

Torque the 2 bolts.

16. INSTALL 3 TENSION SPRINGS

17. INSTALL COMPRESSION SPRING

(a) Install the 2 bushings to the spring.

(b) Apply sealant to 2 or 3 threads of the torx screw.
Sealant:
Part No. 08833-00080, THREE BOND 1344, LOCTITE 242 or equivalent.

(c) Using a torx socket wrench, torque the screw.
Torque: 6.4 N·m (65 kgf·cm, 56 in.·lbf)

18. INSTALL COLUMN PROTECTOR AND WIRING HARNESS CLAMP

Tighten the 2 screws.

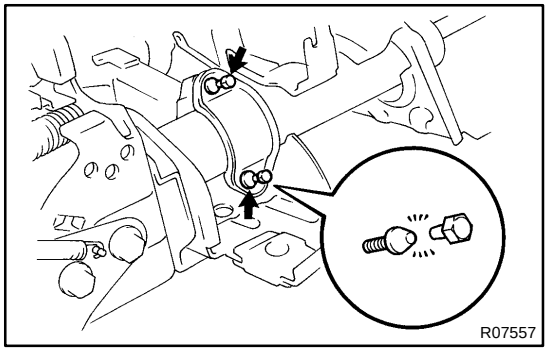

19. INSTALL COLUMN UPPER BRACKET AND COLUMN UPPER CLAMP

Tighten 2 new tapered-head bolts until the bolt head breaks off.

20. INSTALL COLUMN LOWER COVER

Tighten the clamp.

21. INSTALL SHAFT THRUST STOPPER AND SLIDING YOKE

(a) Align the matchmarks on the yoke and main shaft.

(b) Torque the bolt.
Torque: 35 N·m (360 kgf·cm, 26 ft·lbf)

22. INSTALL INTERMEDIATE SHAFT

Temporarily tighten the bolt.

23. INSTALL IGNITION KEY CYLINDER ILLUMINATION

24. CHECK TILT OPERATION

SR142-01

INSTALLATION

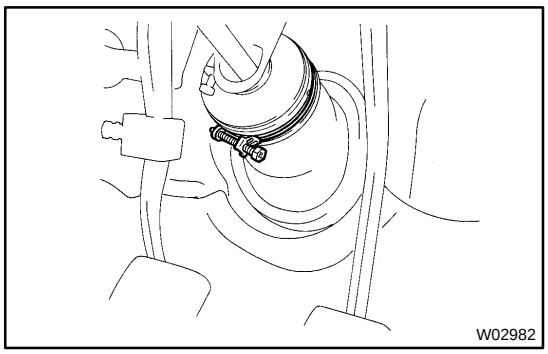

1. INSTALL STEERING COLUMN ASSEMBLY

(a) Torque the 4 column assembly set nuts.
Torque: 25 N·m (260 kgf·cm, 19 ft·lbf)

(b) Connect the connectors.

(c) Install the brake pedal return spring.

(d) Tighten the hole cover clamp.

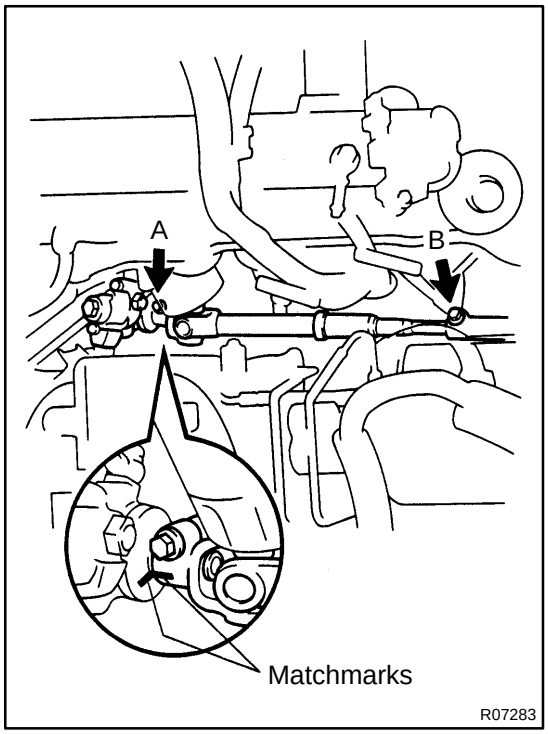

2. CONNECT INTERMEDIATE SHAFT

(a) Align the matchmarks on the intermediate shaft and control valve shaft.

(b) Torque the bolt A.
Torque: 35 N·m (360 kgf·cm, 26 ft·lbf)

(c) Torque the bolt B.
Torque: 35 N·m (360 kgf·cm, 26 ft·lbf)

3. INSTALL SPIRAL CABLE
(See page BE-16)

4. INSTALL COMBINATION SWITCH WITH SPIRAL CABLE

(a) Tighten the 4 screws.

(b) Connect the connectors and airbag connector.

5. INSTALL THESE PARTS:
(See page BO-59)

(a) Heater to Register No.2 duct

(b) Finish lower LH panel

(c) Finish panel

(d) Cluster finish center panel

(e) Cluster finish panel LH

(f) Cluster finish panel RH

(g) Cluster finish panel

(h) Console upper panel

6. INSTALL COLUMN UPPER AND LOWER COVERS

Tighten the 5 screws.

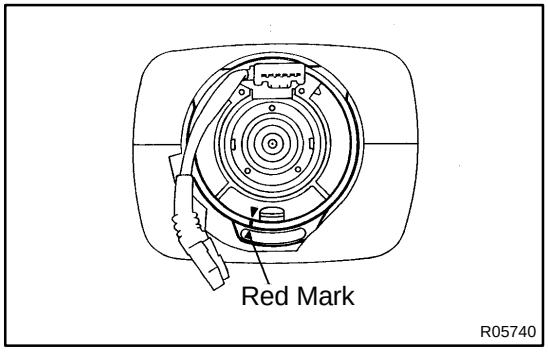

7. CENTER SPIRAL CABLE

(a) Check that the front wheels are facing straight ahead.

(b) Turn the spiral cable counterclockwise by hand until it becomes harder to turn the cable.

(c) Rotate the spiral cable clockwise about 3 turns to align the marks.

HINT:
The spiral cable will rotate about 3 turns to either left or right of the center.

8. INSTALL STEERING WHEEL

(a) Align the matchmarks on the wheel and main shaft.

(b) Torque the wheel set nut.

Torque: 35 N·m (360 kgf·cm, 26 ft·lbf)

(c) Connect the connector.

9. INSTALL STEERING WHEEL PAD

NOTICE:

Make sure the pad is installed to the specified torque. If the pad has been dropped, or there are cracks, dents or other defects in the case or connector, replace the pad with a new one. When installing the pad, take care that the wiring does not interfere with other parts and is not pinched between other parts.

(a) Connect the airbag connector.

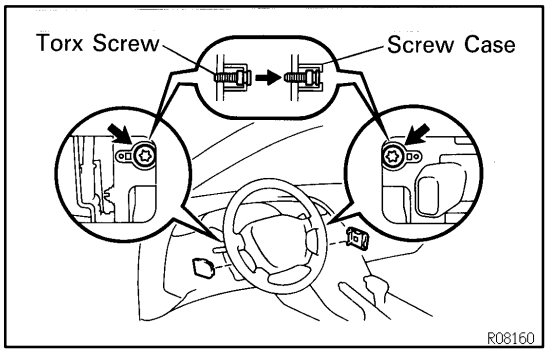

(b) Install the pad after confirming that the circumference of the torx screw groove is caught on the screw case.

(c) Using a torx socket wrench, torque the 2 screws.

Torque: 7.1 N·m (72 kgf·cm, 62 in.·lbf)

10. CHECK STEERING WHEEL CENTER POINT

POWER STEERING VANE PUMP

COMPONENTS

SR143-01

2JZ-GE:

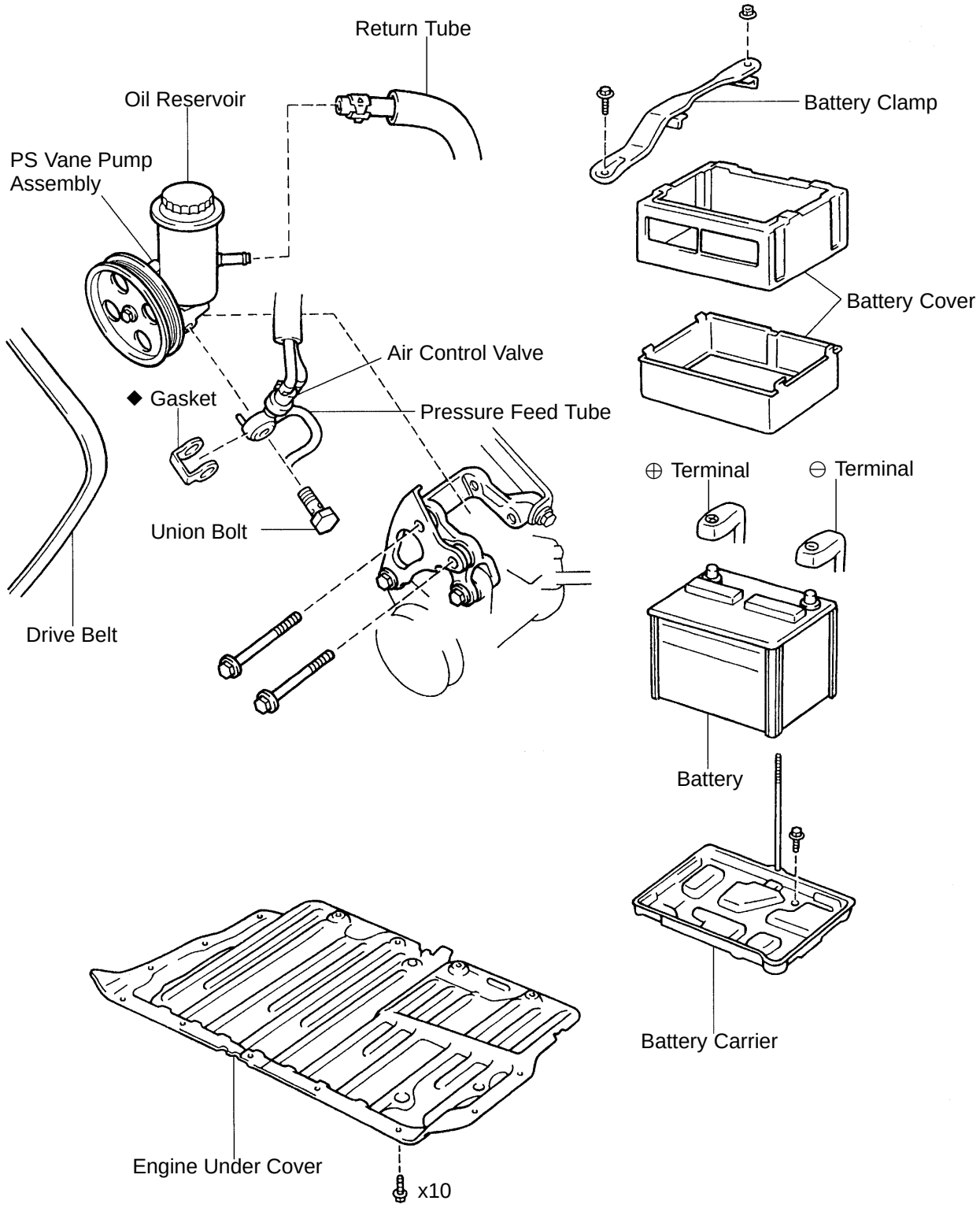

◆ Non-reusable part

Z18268

2JZ-GTE:

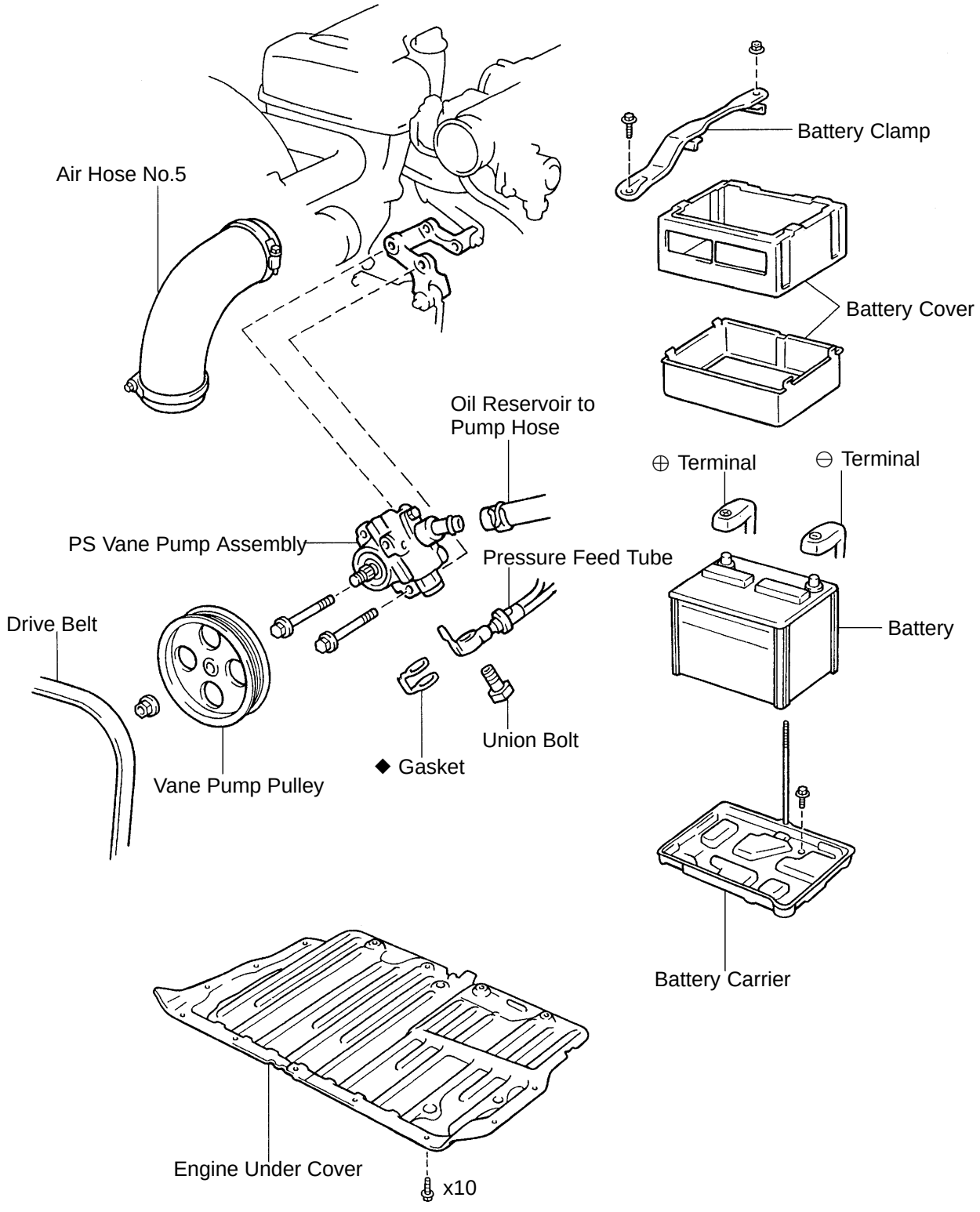

◆ Non-reusable part

Z18269

2JZ-GE and 2JZ-GTE:

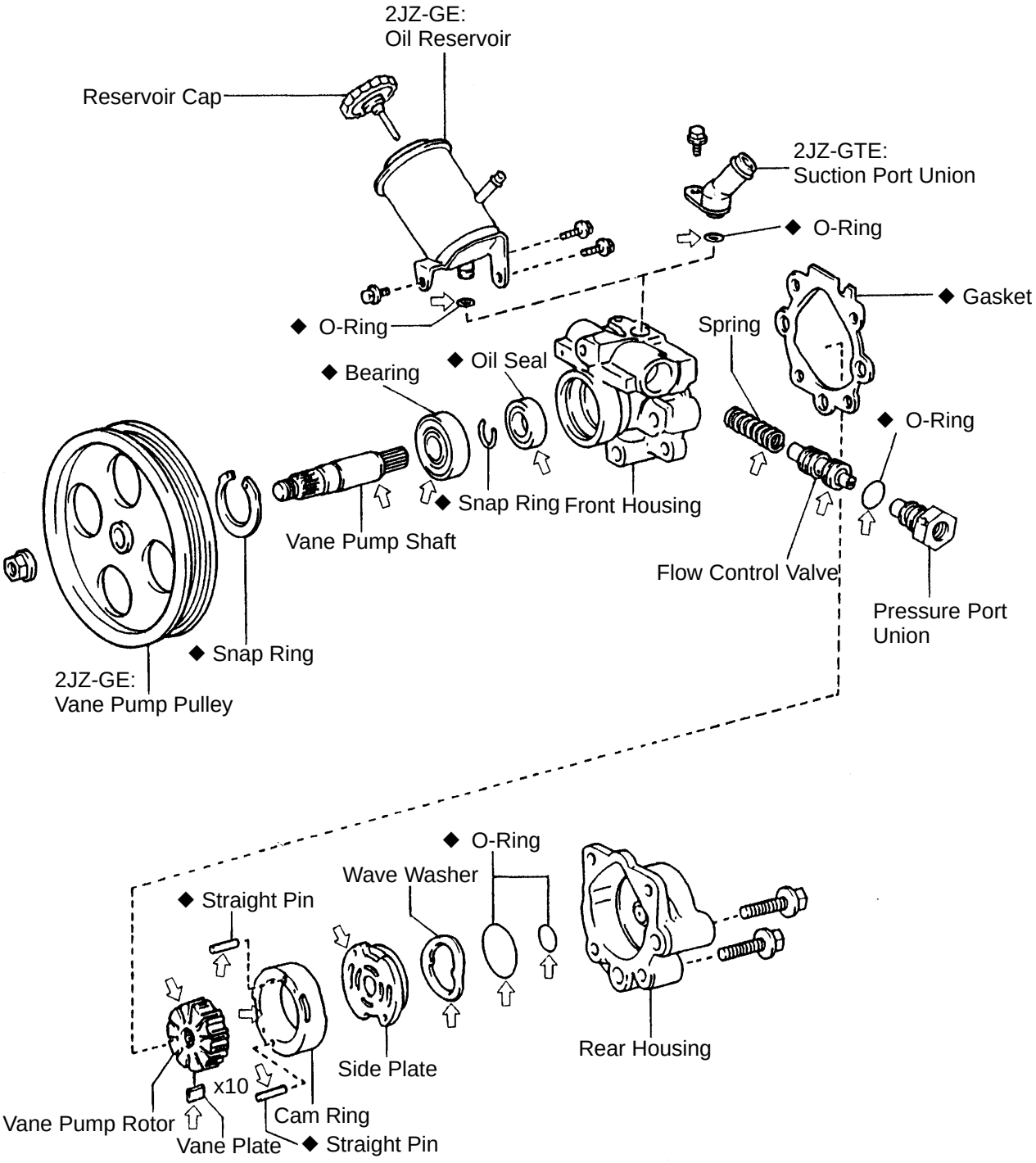

◆ Non-reusable part
⇦: Power steering fluid

Z19281

SR144-01

REMOVAL

1. REMOVE ENGINE UNDER COVER

Remove the 10 screws.

2. REMOVE BATTERY

(a) Disconnect the 2 terminals.
(b) Remove the bolt, nut and battery clamp.
(c) Remove the battery cover.
(d) Remove the battery and battery carrier.

3. 2JZ-GTE:
REMOVE AIR HOSE No.5

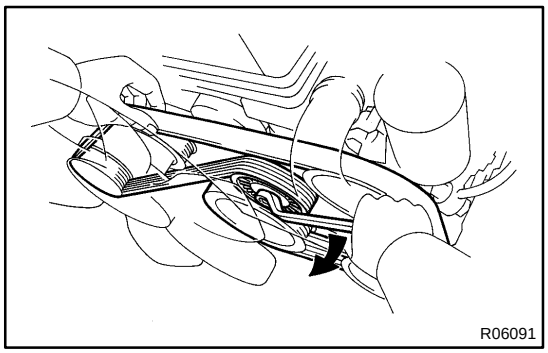
R06091

4. REMOVE DRIVE BELT

Loosen the drive belt tension by turning the drive belt tensioner clockwise, and remove the drive belt.

5. 2JZ-GTE:
DISCONNECT OIL RESERVOIR TO PUMP HOSE

Remove the clip and disconnect the hose.

NOTICE:
Take care not to spill fluid on the A/C compressor rotor.

6. 2JZ-GE:
DISCONNECT RETURN TUBE

NOTICE:
Take care not to spill fluid on the A/C compressor rotor.

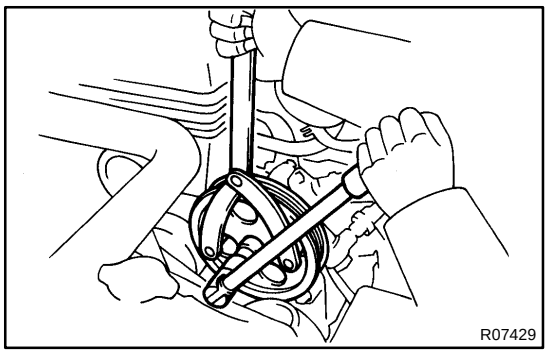
R07429

7. 2JZ-GTE:
REMOVE VANE PUMP PULLEY

Using SST to stop the pulley rotating, remove the nut.

SST 09960-10010 (09962-01000, 09963-01000)

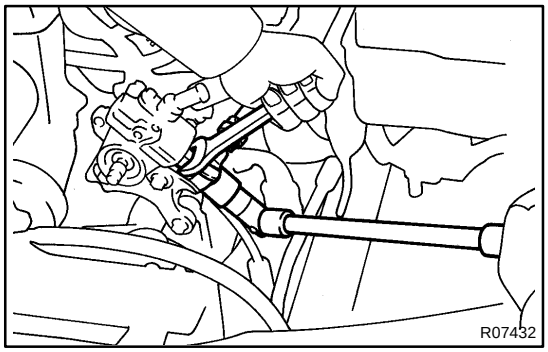
R07432

8. REMOVE PRESSURE FEED TUBE

Using a spanner (24 mm) to hold the pressure port union, remove the union bolt and gasket.

9. REMOVE PS VANE PUMP ASSEMBLY

Remove the 2 pump assembly set bolts.

SR145-01

DISASSEMBLY

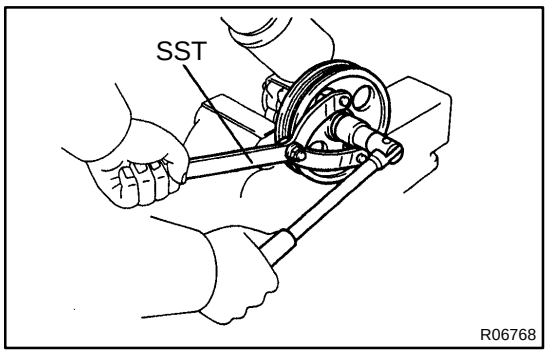

NOTICE:

When using a vise, do not overtighten it.

1. 2JZ-GE:

REMOVE VANE PUMP PULLEY

Using SST to stop the pulley rotating, remove the pulley set nut.

SST 09960-10010 (09962-01000, 09963-01000)

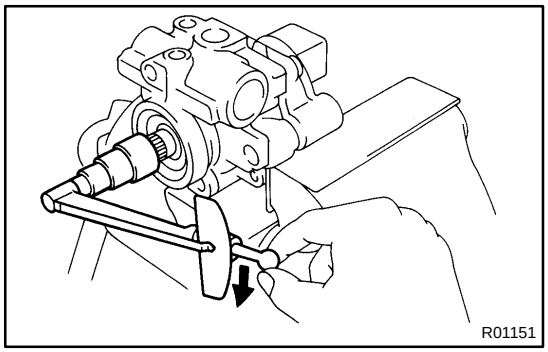

2. MEASURE PS VANE PUMP ROTATING TORQUE

(a) Check that the pump rotates smoothly without abnormal noise.

(b) Temporarily install the pulley set nut, and using a torque wrench, check the pump rotating torque.

Rotating torque:

0.2 N·m (2.5 kgf·cm, 2.2 in.·lbf) or less

3. 2JZ-GE:

REMOVE OIL RESERVOIR

(a) Remove the 3 bolts.

(b) Remove the O-ring from the reservoir.

4. 2JZ-GTE:

REMOVE SUCTION PORT UNION

(a) Remove the bolt.

(b) Remove the O-ring from the union.

5. REMOVE PRESSURE PORT UNION, FLOW CONTROL VALVE AND SPRING

Remove the O-ring from the union.

6. REMOVE REAR HOUSING

Remove the 2 bolts.

7. REMOVE CAM RING, VANE PUMP ROTOR AND 10 VANE PLATES

NOTICE:

Be careful not to drop the vane plates.

8. REMOVE 2 STRAIGHT PINS

9. REMOVE GASKET

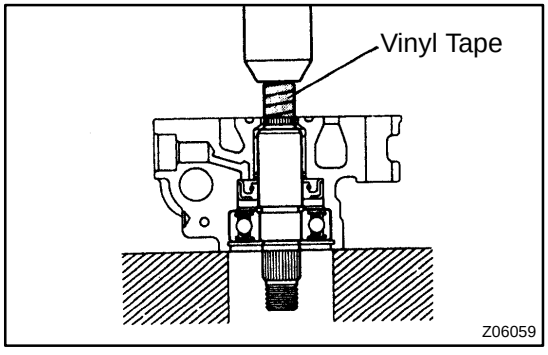

10. REMOVE VANE PUMP SHAFT WITH BEARING

(a) Using snap ring pliers, remove the snap ring from the front housing.

(b) Wind vinyl tape on the serrated part of the shaft.

(c) Using a press, press out the shaft with the bearing.

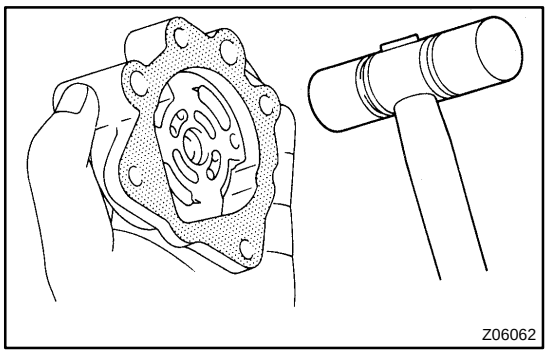

11. REMOVE SIDE PLATE AND WAVE WASHER

(a) Using a plastic hammer, tap the rear housing on the shaded area untill the plate and washer come off.

(b) Remove the 2 O-rings from the rear housing.

SR146-01

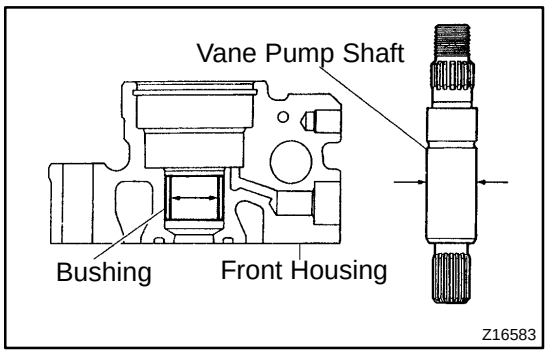

INSPECTION

NOTICE:

When using a vise, do not overtighten it.

1. MEASURE OIL CLEARANCE BETWEEN VANE PUMP SHAFT AND BUSHING

Using a micrometer and a caliper gauge, measure the oil clearance.

Standard clearance:
0.03 - 0.05 mm (0.0012 - 0.0020 in.)
Maximum clearance:
0.07 mm (0.0028 in.)

If it is more than maximum, replace the front housing and vane pump shaft.

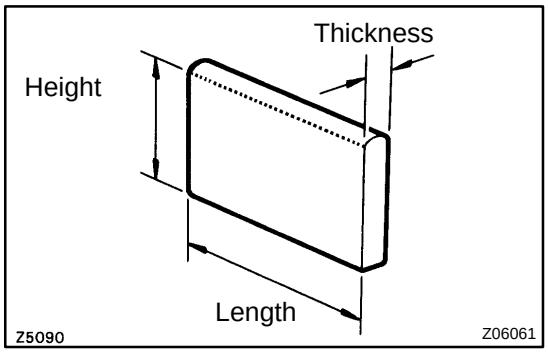

2. INSPECT VANE PUMP ROTOR AND VANE PLATES

(a) Using a micrometer, measure the height, thickness and length of the 10 vane plates.

Minimum height: 8.6 mm (0.339 in.)
Minimum thickness: 1.40 mm (0.0551 in.)
Mininum length: 14.99 mm (0.5902 in.)

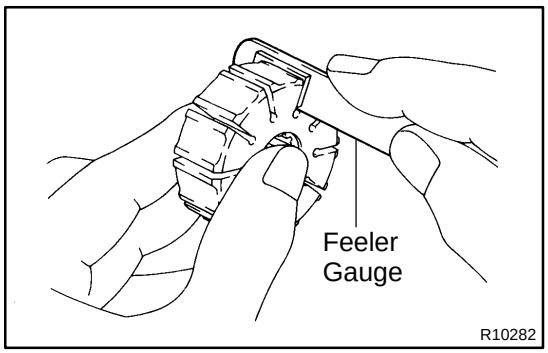

(b) Using a feeler gauge, measure the clearance between the rotor groove and plate.

Maximum clearance: 0.035 mm (0.0014 in.)

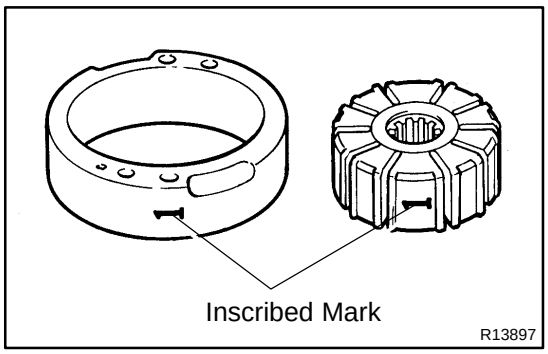

If it is more than the maximum, replace the plate and/or rotor with one having the same mark stamped on the cam ring.

Inscribed mark:
1, 2, 3, 4 or None

HINT:
There are 5 vane plate lengths with the following rotor and cam ring marks:

Rotor and cam ring mark	Vane plate part number	Vane plate length mm (in.)
None	44345-26010	14.999-15.001 (0.59051-0.59059)
1	44345-26020	14.997-14.999 (0.59043-0.59051)
2	44345-26030	14.995-14.997 (0.59035-0.59043)
3	44345-26040	14.993-14.995 (0.59027-0.59035)
4	44345-26050	14.991-14.993 (0.59020-0.59027)

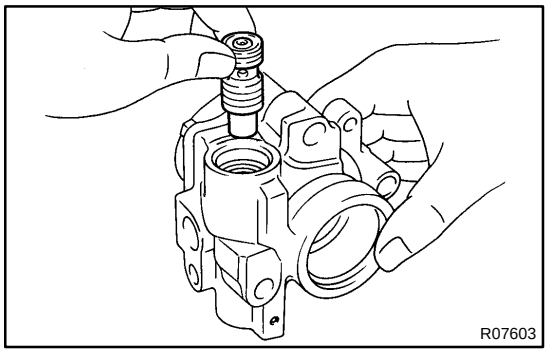

3. INSPECT FLOW CONTROL VALVE

(a) Coat the valve with power steering fluid and check that it falls smoothly into the valve hole by its own weight.

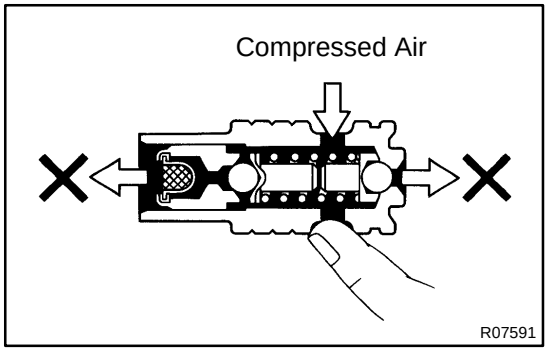

(b) Check the valve for leakage.
Close one of the holes and apply 392 - 490 kPa (4 - 5 kgf/cm^2, 57 - 71 psi) of compressed air into the opposite side, and confirm that air does not come out from the end holes.

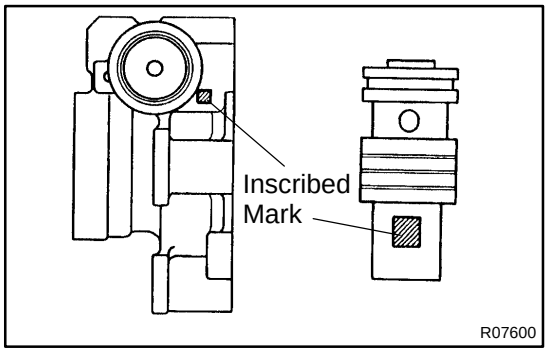

If necessary, replace the valve with one having the same letter as inscribed on the front housing.

Inscribed mark:
A, B, C, D, E or F

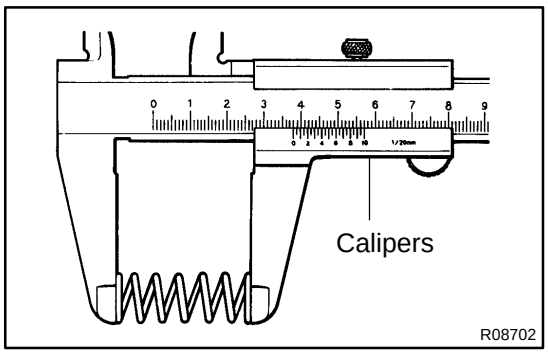

4. INSPECT SPRING

Using calipers, measure the free length of the spring.

Minimum free length: 33mm (1.30 in.)

If it is not within the specification, replace the spring.

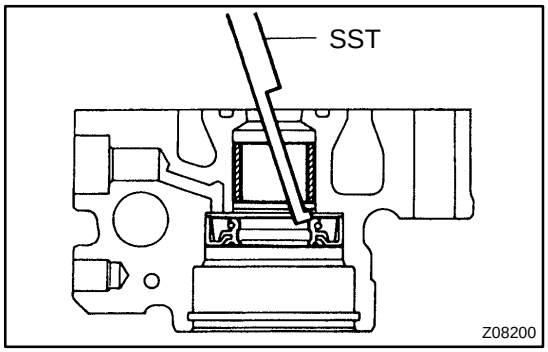

5. IF NECESSARY, REPLACE OIL SEAL

(a) Using SST, tap out the oil seal.

SST 09631-10030

NOTICE:

Be careful not to damage the bushing of the front housing.

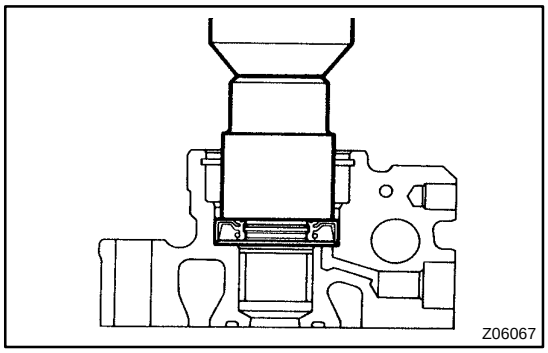

(b) Coat a new oil seal lip with power steering fluid.

(c) Using a socket wrench (24 mm), press in the oil seal.

NOTICE:

Make sure to install the oil seal facing the correct direction.

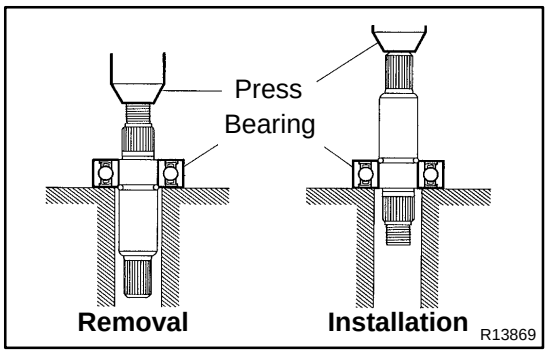

6. IF NECESSARY, REPLACE BEARING

(a) Using a press, press out the bearing.

(b) Using a snap ring expander, remove the snap ring from the vane pump shaft.

NOTICE:

Be careful not damage the vane pump shaft.

(c) Using a snap ring expander, install a new snap ring.

NOTICE:

Be careful not damage the vane pump shaft.

(d) Coat a new bearing with power steering fluid.

(e) Using a press, press in the bearing.

SR147-01

REASSEMBLY

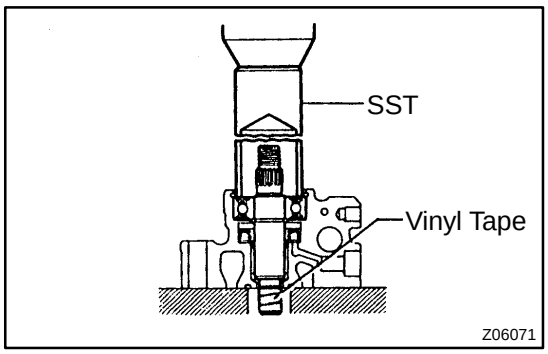

NOTICE:

When using a vise, do not overtighten it.

1. COAT WITH POWER STEERING FLUID

(See page SR-23)

2. INSTALL VANE PUMP SHAFT WITH BEARING

(a) Wind vinyl tape on the serrated part of the shaft.

(b) Using SST, press in the shaft with the bearing to the front housing.

SST 09608-04031

NOTICE:

Be careful not to damage the oil seal.

(c) Using snap ring pliers, install a new snap ring to the front housing.

3. INSTALL STRAIGHT PINS

Using a plastic hammer, drive in 2 new straight pins to the front housing.

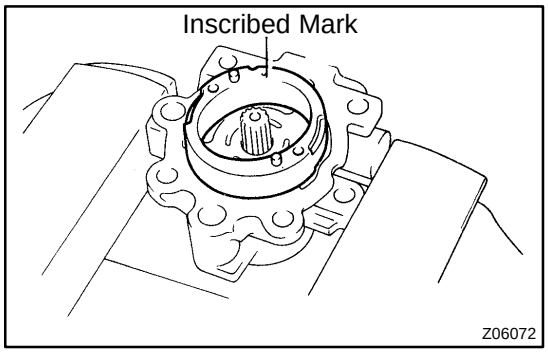

4. INSTALL CAM RING

Align the holes of the ring and straight pins, and install the ring with the inscribed mark facing outward.

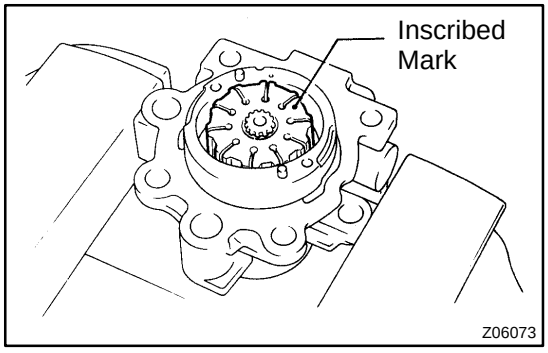

5. INSTALL VANE PUMP ROTOR

Install the rotor with the inscribed mark facing outward.

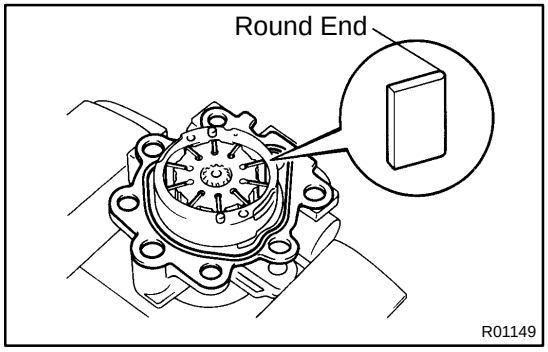

6. INSTALL 10 VANE PLATES

Install the plate with the round end facing outward.

7. INSTALL GASKET

Install a new gasket to the front housing.

8. INSTALL SIDE PLATE

Align the holes of the plate and straight pins.

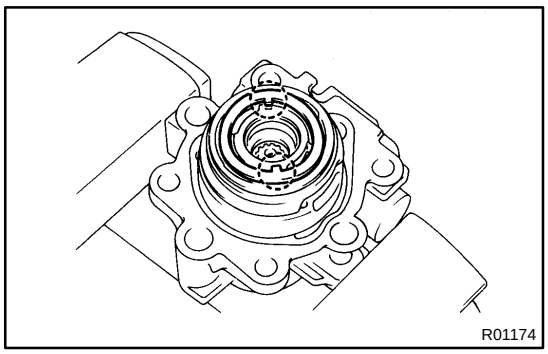
R01174

9. INSTALL WAVE WASHER

Install the washer so that its protrusions fit into the slots in the side plate.

10. INSTALL REAR HOUSING

(a) Coat 2 new O-rings with power steering fluid and install them to the housing.

(b) Torque the 2 bolts.

Torque: 17 N·m (170 kgf·cm, 12 ft·lbf)

11. INSTALL SPRING, FLOW CONTROL VALVE AND PRESSURE PORT UNION

(a) Coat a new O-ring with power steering fluid and install it to the union.

(b) Torque the union.

Torque: 83 N·m (850 kgf·cm, 61 ft·lbf)

12. 2JZ-GTE:
INSTALL SUCTION PORT UNION

(a) Coat a new O-ring with power steering fluid and install it to the union.

(b) Torque the bolt.

Torque: 13 N·m (130 kgf·cm, 9 ft·lbf)

13. 2JZ-GE:
INSTALL OIL RESERVOIR

(a) Coat a new O-ring with power steering fluid and install it to the reservoir.

(b) Torque the 3 bolts.

Torque:
Front side bolt: 13 N·m (130 kgf·cm, 9 ft·lbf)
Rear side bolts: 17 N·m (170 kgf·cm, 12 ft·lbf)

14. MEASURE PS VANE PUMP ROTATING TORQUE
(See page SR-27)

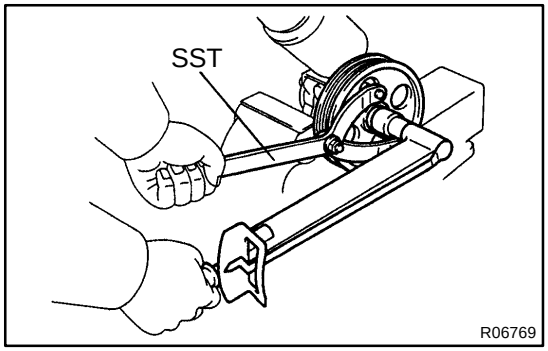

R06769

15. 2JZ-GE:
INSTALL VANE PUMP PULLEY

Using SST to stop the pulley rotating, torque the nut.

SST 09960-10010 (09962-01000, 09963-01000)

Torque: 43 N·m (440 kgf·cm, 32 ft·lbf)

SR148-01

INSTALLATION

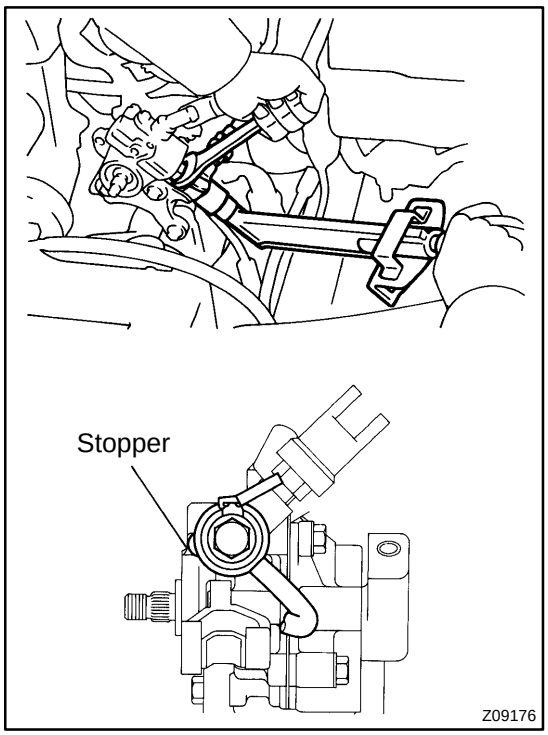

1. INSTALL PS VANE PUMP ASSEMBLY

Torque the 2 bolts.

Torque:
RH side bolt: 39 N·m (400 kgf·cm, 29 ft·lbf)
LH side bolt: 58 N·m (590 kgf·cm, 42 ft·lbf)

2. CONNECT PRESSURE FEED TUBE

Using a spanner (24 mm) to hold the pressure port union, torque the union bolt with a new gasket.

HINT:

Make sure that the stopper of the tube is touching the PS vane pump assembly as shown, before torquing the union bolt.

Torque: 49 N·m (500 kgf·cm, 36 ft·lbf)

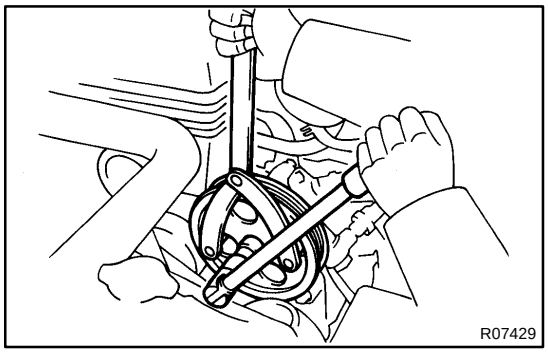

3. 2JZ-GTE:
INSTALL VANE PUMP PULLEY

Using SST to stop the pulley rotating, torque the nut.

SST 09960-10010 (09962-01000, 09663-01000)

Torque: 43 N·m (440 kgf·cm, 32 ft·lbf)

4. 2JZ-GE:
CONNECT RETURN TUBE

5. 2JZ-GTE:
CONNECT OIL RESERVOIR TO PUMP HOSE

Connect the hose and install the clip.

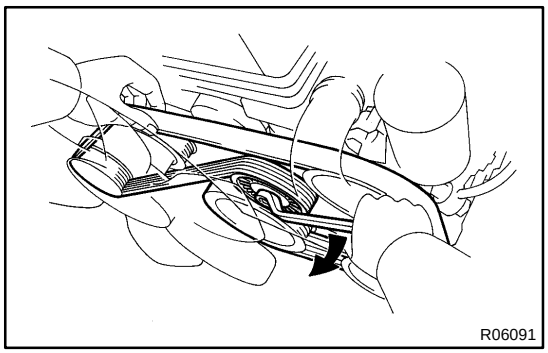

6. INSTALL DRIVE BELT

Loosen the drive belt tension by turning the drive belt tensioner clockwise, and install the drive belt.

7. 2JZ-GTE:
INSTALL AIR HOSE No.5

8. INSTALL BATTERY

(a) Install the battery carrier and battery.
(b) Install the battery cover.
(c) Install the battery clamp with bolt and nut.
(d) Connect the 2 terminals.

9. INSTALL ENGINE UNDER COVER

Install the 10 screws.

10. BLEED POWER STEERING SYSTEM
(See page SR-3)

POWER STEERING GEAR

COMPONENTS

SR149-01

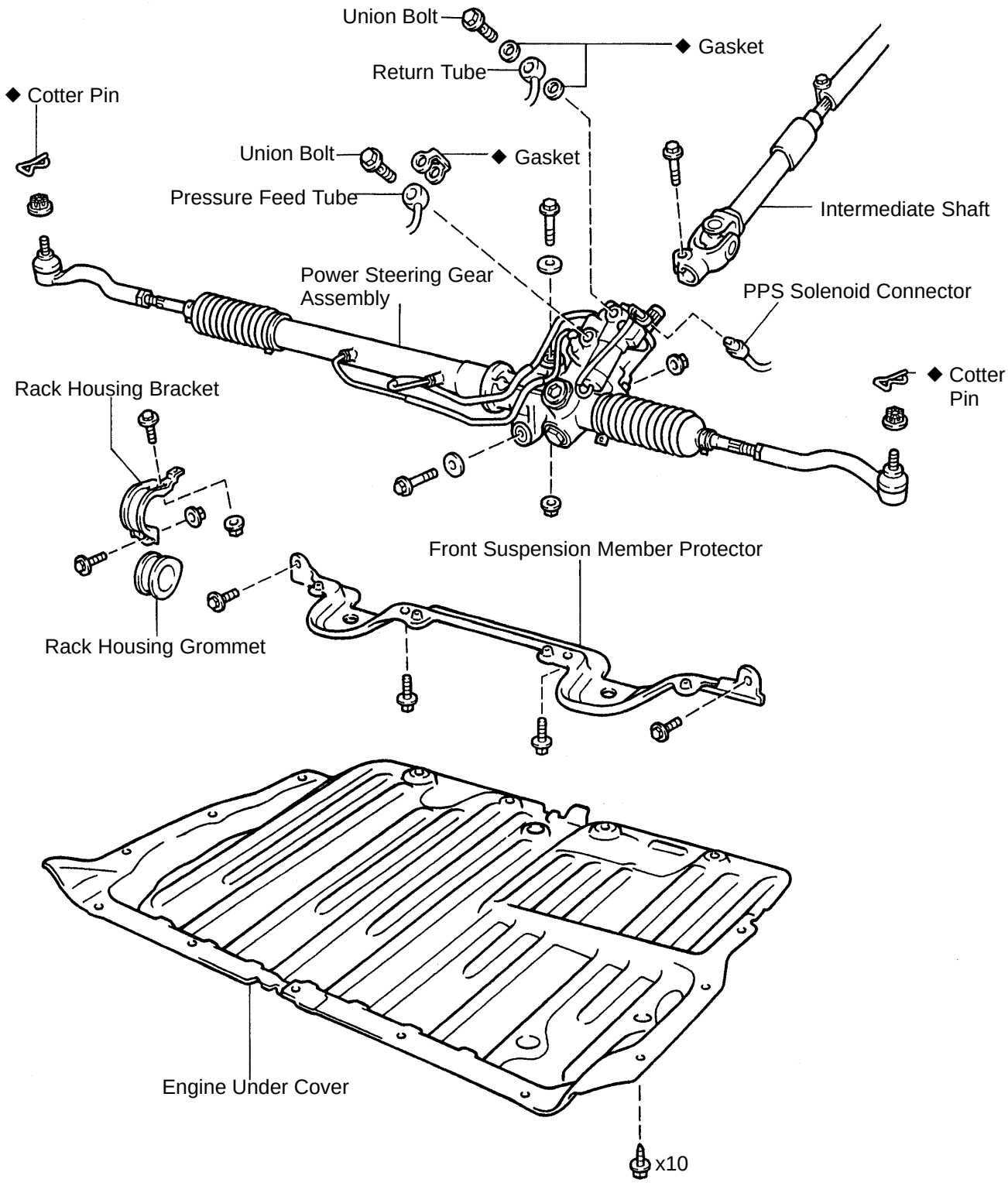

◆ Non-reusable part

R11266

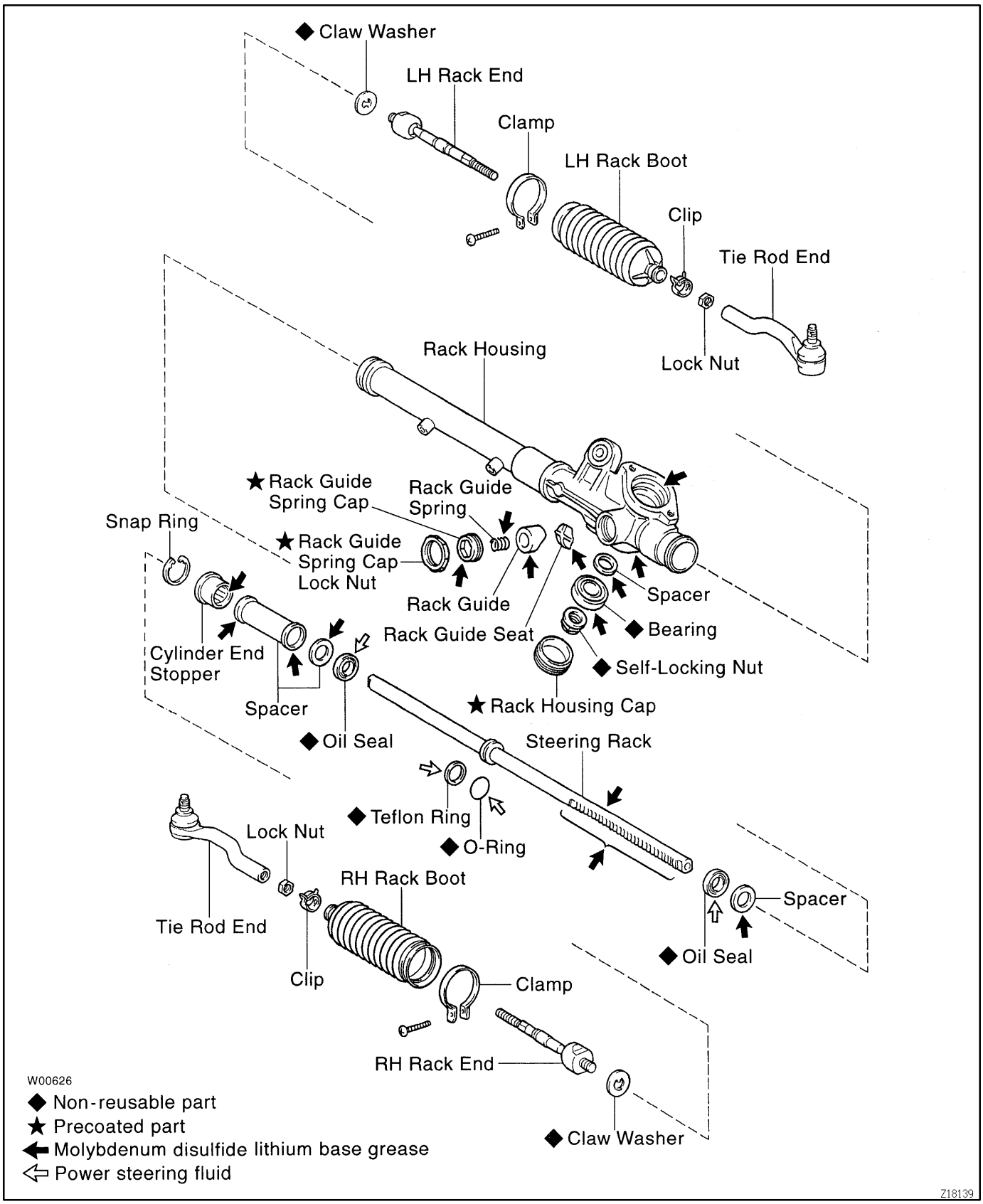
◆ Claw Washer
LH Rack End
Clamp
LH Rack Boot
Clip
Tie Rod End
Lock Nut
Rack Housing
★ Rack Guide Spring Cap
Rack Guide Spring
Snap Ring
★ Rack Guide Spring Cap Lock Nut
Rack Guide
Spacer
◆ Bearing
Rack Guide Seat
◆ Self-Locking Nut
Cylinder End Stopper
Spacer
★ Rack Housing Cap
◆ Oil Seal
Steering Rack
◆ Teflon Ring
◆ O-Ring
Lock Nut
RH Rack Boot
Spacer
Tie Rod End
◆ Oil Seal
Clip
Clamp
RH Rack End
◆ Claw Washer
W00626
◆ Non-reusable part
★ Precoated part
Molybdenum disulfide lithium base grease
Power steering fluid
Z18139

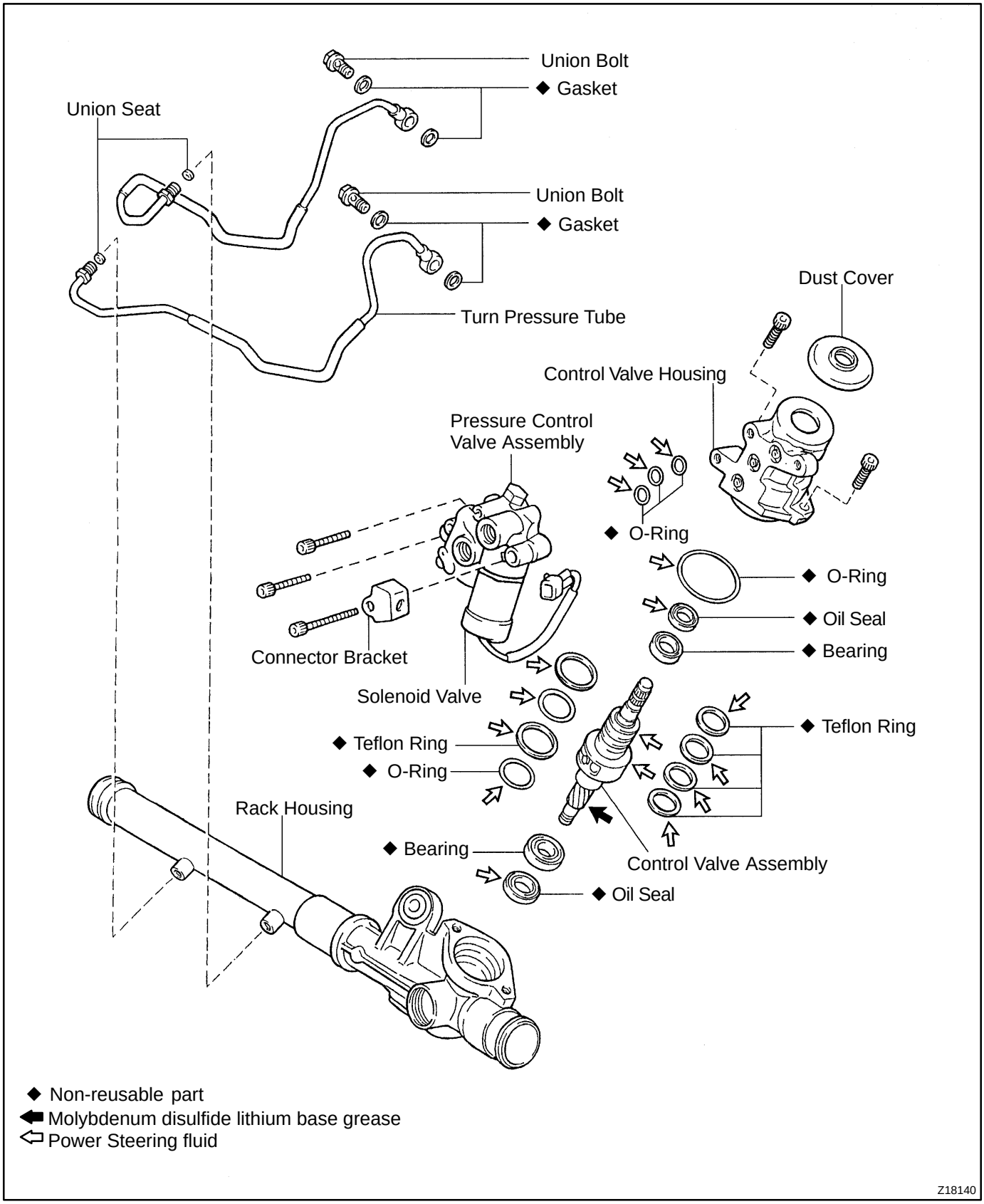
Union Bolt
◆ Gasket
Union Seat
Union Bolt
◆ Gasket
Turn Pressure Tube
Dust Cover
Control Valve Housing
Pressure Control
Valve Assembly
◆ O-Ring
◆ O-Ring
◆ Oil Seal
◆ Bearing
Connector Bracket
Solenoid Valve
◆ Teflon Ring
◆ Teflon Ring
◆ O-Ring
Rack Housing
◆ Bearing
Control Valve Assembly
◆ Oil Seal
◆ Non-reusable part
Molybdenum disulfide lithium base grease
Power Steering fluid
Z18140

SR14A-01

REMOVAL

1. PLACE FRONT WHEELS FACING STRAIGHT AHEAD

2. REMOVE STEERING WHEEL PAD
(See page SR-1 1)

3. REMOVE STEERING WHEEL
(See page SR-1 1)

4. REMOVE ENGINE UNDER COVER

Remove the 10 bolts.

5. REMOVE FR SUSPENSION MEMBER PROTECTOR

Remove the 4 bolts.

6. DISCONNECT INTERMEDIATE SHAFT
(See page SR-1 1)

7. DISCONNECT RH AND LH TIE ROD ENDS
(See page SA-12)

8. DISCONNECT PRESSURE FEED TUBE

Remove the union bolt and gasket.

9. DISCONNECT RETURN TUBE

Remove the union bolt and 2 gaskets.

10. DISCONNECT PPS SOLENOID CONNECTOR

11. REMOVE RACK HOUSING BRACKET AND GROMMET

Remove the 2 bolts and nuts.

12. REMOVE PS GEAR ASSEMBLY

Remove the 2 bolts and nuts.

SR14B-01

DISASSEMBLY

NOTICE:

When using a vise, do not overtighten it.

1. SECURE PS GEAR ASSEMBLY IN VISE

Using SST, secure the gear assembly in a vise.

SST 09612-00012

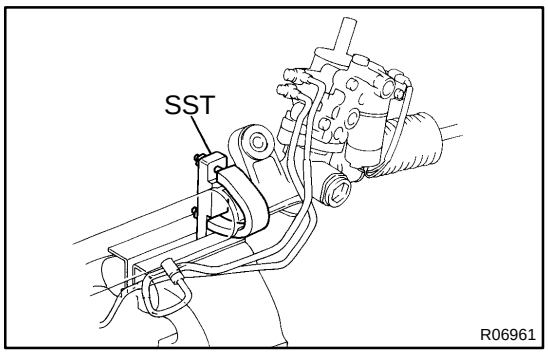

2. REMOVE 2 TURN PRESSURE TUBES

(a) Remove the union bolt and 2 gaskets.

(b) Using SST, remove the tube.

SST 09633-00020

(c) Remove the 2 union seats from the rack housing.

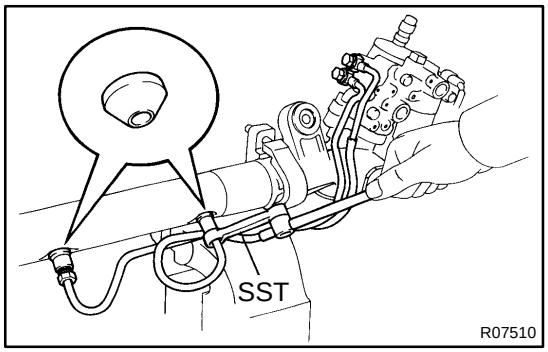

3. REMOVE RH AND LH TIE ROD ENDS AND LOCK NUTS

Place matchmarks on the tie rod end and rack end, and loosen the lock nut.

4. REMOVE RH AND LH CLIPS, RACK BOOTS AND CLAMPS

NOTICE:

- **Be careful not to damage the boot.**
- **Mark the RH and LH boots.**

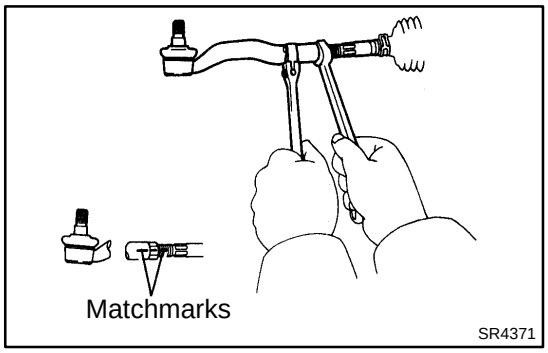

5. REMOVE RH AND LH RACK ENDS AND CLAW WASHERS

(a) Using a chisel and a hammer, unstake the washer.

NOTICE:

Avoid any impact to the steering rack.

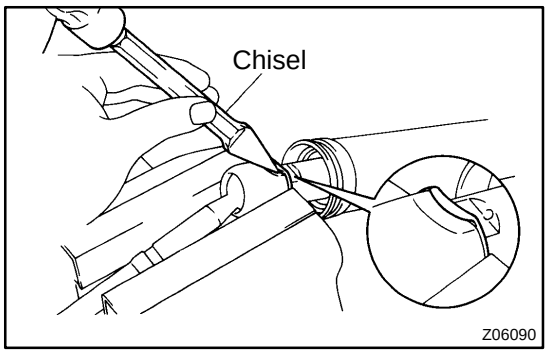

(b) Using a spanner (22 mm) to hold the steering rack and using SST, remove the rack end.

SST 09922-10010

NOTICE:

- **Use SST 09922-10010 in the direction shown in the illustration.**
- **Mark the RH and LH rack ends.**

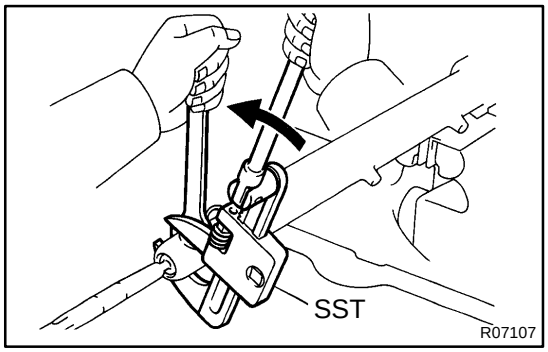

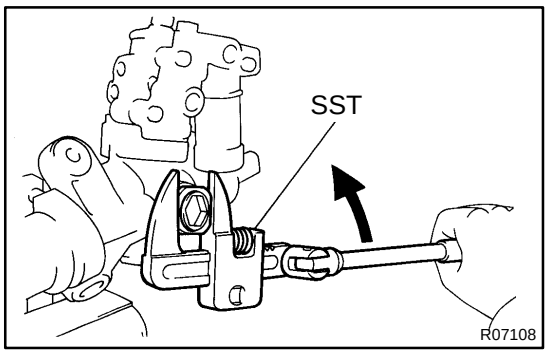

6. REMOVE RACK GUIDE SPRING CAP LOCK NUT

Using SST, remove the nut.

SST 09922-10010

NOTICE:

Use SST 09922-10010 in the direction shown in the illustration.

7. REMOVE RACK GUIDE SPRING CAP, RACK GUIDE SPRING, RACK GUIDE AND RACK GUIDE SEAT

Using a hexagon wrench (24 mm), remove the cap.

8. REMOVE RACK HOUSING CAP

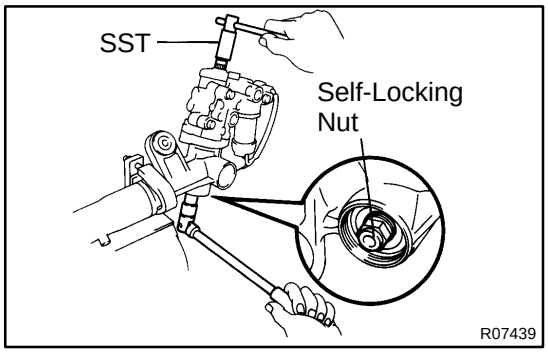

9. REMOVE SELF- LOCKING NUT, BEARING AND SPACER

Using SST to stop the control valve shaft rotating, remove the nut.

SST 09616-00010

10. REMOVE DUST COVER

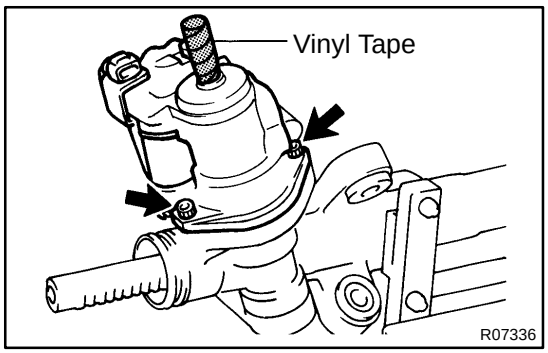

11. REMOVE CONTROL VALVE HOUSING WITH CONTROL VALVE ASSEMBLY

(a) To prevent oil seal lip damage, wind vinyl tape on the serrated part of the control valve shaft.

(b) Using a hexagon wrench (6 mm), remove the 2 bolts.

(c) Remove the O-ring from the housing.

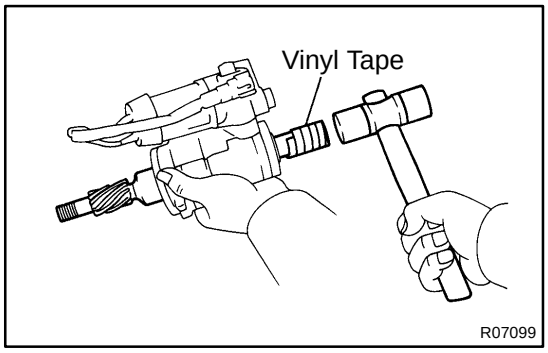

12. REMOVE CONTROL VALVE ASSEMBLY

Using a plastic hammer, tap out the control valve.

NOTICE:

Be careful not to damage the oil seal lip.

13. REMOVE CYLINDER END STOPPER AND 2 SPACERS

Using snap ring pliers, remove the snap ring from the rack housing.

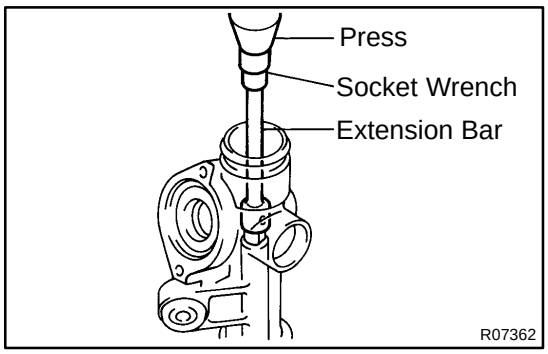

14. REMOVE STEERING RACK AND OIL SEAL

(a) Using an extension bar or brass bar and a press, press out the rack with the oil seal.

NOTICE:

Take care not to drop the rack.

(b) Remove the oil seal from the rack.

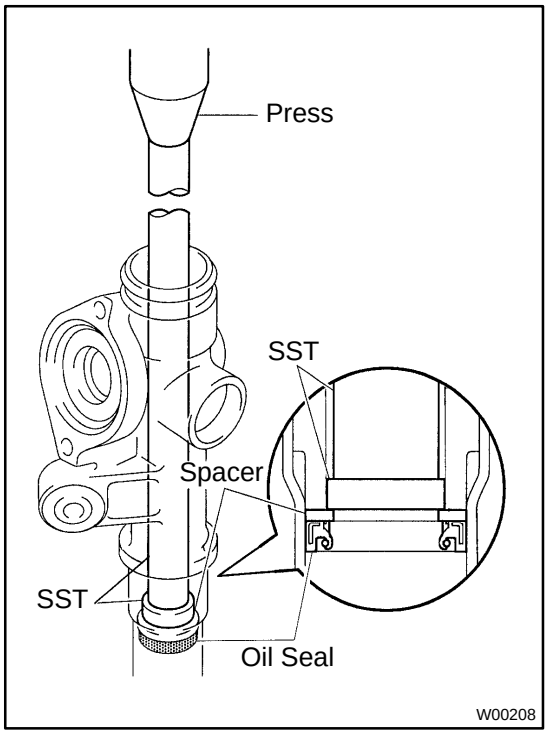

15. REMOVE OIL SEAL AND SPACER

Using SST, press out the oil seal and spacer.

SST 09950-60010 (09951-00280),
09950-70010 (09951-07200)

SR14C-01

INSPECTION

NOTICE:

When using a vise, do not overtighten it.

1. INSPECT STEERING RACK

(a) Using a dial indicator, check the rack for runout and for teeth wear or damage.

Maximum runout: 0.30mm (0.018 in.)

(b) Check the back surface for wear or damage.

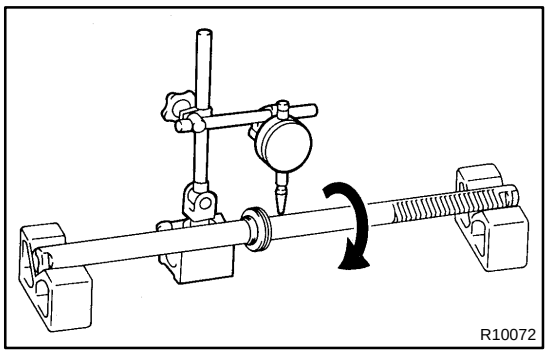

2. IF NECESSARY, REPLACE OIL SEAL AND BEARING

(a) Set SST to the rack housing, as shown.

SST 09612-30012

(b) Turn A clockwise and engage the tips of C on the bearing.

(c) Using a spanner (8 mm), keep A fixed while turning nut B clockwise, and remove the bearing.

NOTICE:

Be careful not to damage the rack housing.

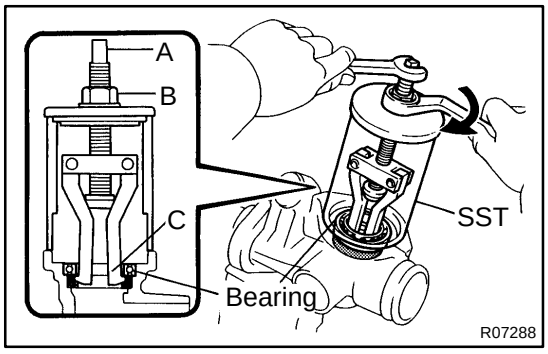

(d) Using SST, remove the oil seal from the rack housing.

SST 09612-30012

NOTICE:

Be careful not to damage the rack housing.

HINT:

When using SST, apply the tips of SST to the cutouts in the rack housing.

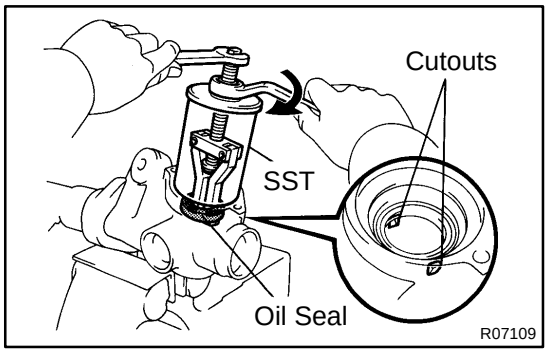

(e) Coat a new oil seal lip with power steering fluid.

(f) Using SST, press in the oil seal.

SST 09950-60010 (09951-00280, 09951-00390, 09952-06010), 09950-70010 (09951-07100)

NOTICE:

Make sure to install the oil seal facing the correct direction.

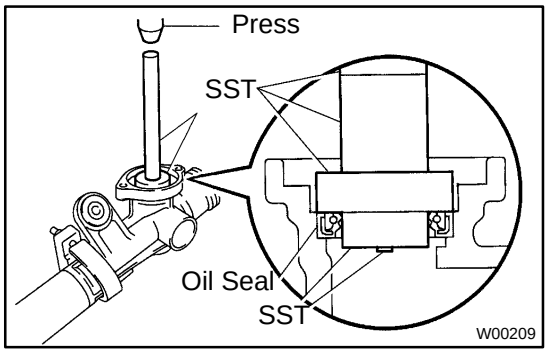

(g) Using SST, press in the bearing.

SST 09950-60010 (09951-00460), 09950-70010 (09951-07100)

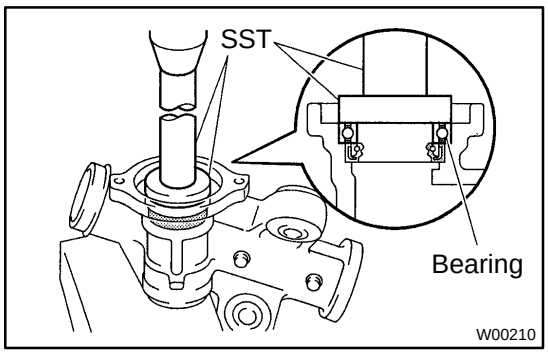

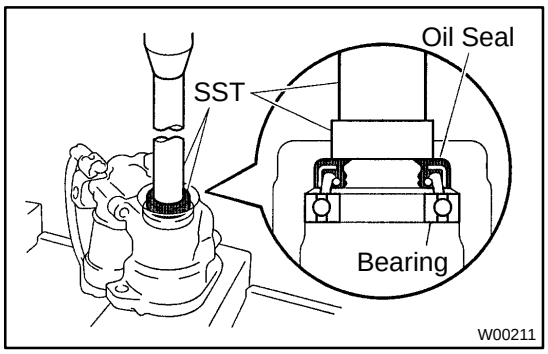

3. IF NECESSARY, REPLACE OIL SEAL AND BEARING

(a) Using SST, press out the oil seal with the bearing from the control valve housing.
SST 09950-60010 (09951-00240),
09950-70010 (09951-07100)

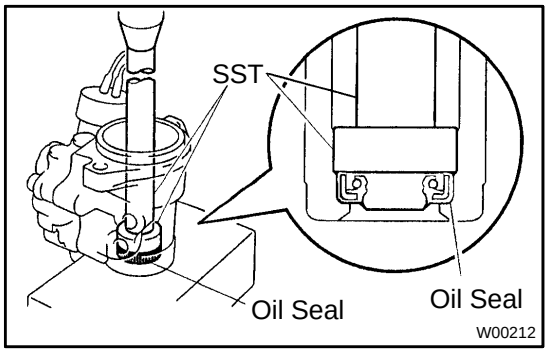

(b) Coat a new oil seal lip with power steering fluid.

(c) Using SST, press in the oil seal.
SST 09950-60010 (09951-00320),
09950-70010 (09951-07200)

NOTICE:
Make sure to install the oil seal facing the correct direction.

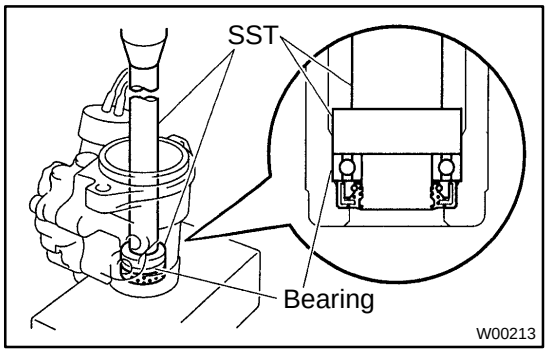

(d) Using SST, press in the bearing.
SST 09950-60010 (09951-00340),
09950-70010 (09951-07200)

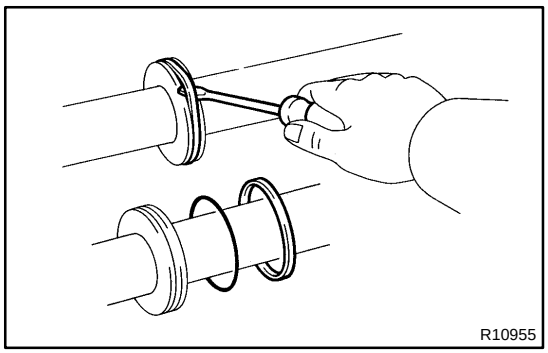

4. IF NECESSARY, REPLACE TEFLON RING AND O-RING

(a) Using a screwdriver, remove the teflon ring and O-ring from the steering rack.

NOTICE:
Be careful not to damage the groove of the ring.

(b) Coat a new O-ring with power steering fluid and install it.

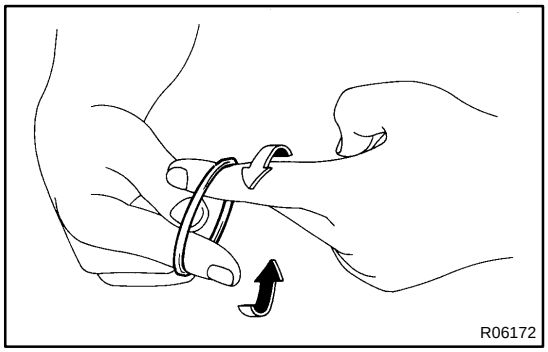

(c) Expand a new teflon ring with your fingers.

NOTICE:
Be careful not to overexpand the ring.

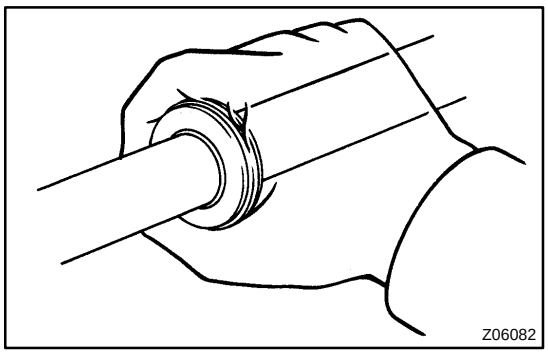

(d) Coat the ring with power steering fluid.
(e) Install the ring to the rack, and snug it down with your fingers.

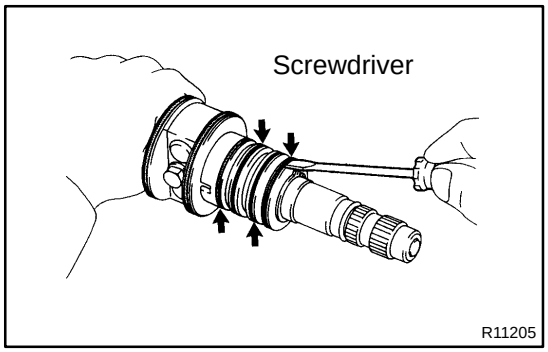

5. IF NECESSARY, REPLACE TEFLON RINGS

(a) Using a screwdriver, remove the 4 rings from the control valve assembly.

NOTICE:

Be careful not to damage the grooves for the ring.

(b) Expand 4 new rings with your fingers.

NOTICE:

Be careful not to overexpand the ring.

(c) Coat the rings with power steering fluid.
(d) Install the rings to the control valve assembly, and snug them down with your fingers.

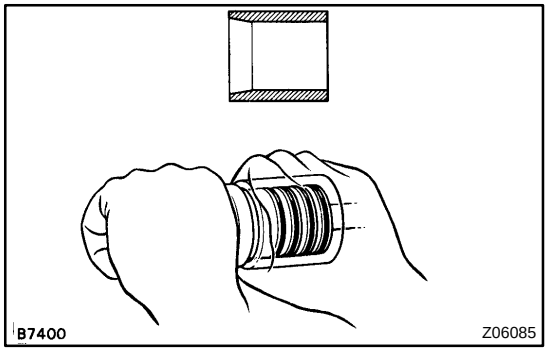

(e) Carefully slide the tapered end of SST over the rings to seal them.
SST 09631-20081

NOTICE:

Be careful not to damage the rings.

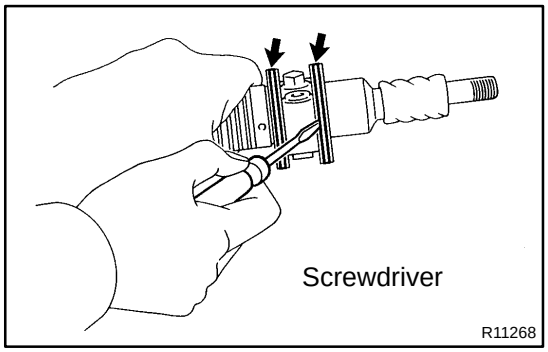

6. IF NECESSARY, REPLACE TEFLON RINGS AND O-RINGS

(a) Using a screwdriver, remove the 2 teflon rings and O-rings from the control valve assembly.

NOTICE:

Be careful not to damage the grooves for the teflon ring.

(b) Coat 2 new O-rings with power steering fluid, and install them.

(c) Expand 2 new teflon rings with your fingers.

NOTICE:

Be careful not to overexpand the teflon rings.

(d) Coat the rings with power steering fluid.

(e) Install the rings to the valve assembly, and snug them down with your fingers.

(f) Carefully slide the tapered end of SST over the teflon rings to seal them.

SST 09631-32020

NOTICE:

Be careful not to damage the teflon rings.

7. IF NECESSARY, REPLACE PRESSURE CONTROL VALVE ASSEMBLY

(a) Using a hexagon wrench (6 mm), remove the 3 bolts and connector bracket.

(b) Remove the 3 O-rings from the control valve housing.

(c) Coat 3 new O-rings with power steering fluid, and install them.

(d) Using a hexagon wrench (6 mm), install a new pressure control valve and connector bracket with the 3 bolts.

Torque: 18 N·m (185 kgf·cm, 13 ft·lbf)

SR14D-01

REASSEMBLY

NOTICE:

When using a vise, do not overtighten it.

1. COAT WITH POWER STEERING FLUID OR MOLYBDENUM DISULFIDE LITHIUM BASE GREASE (See page SR-35)

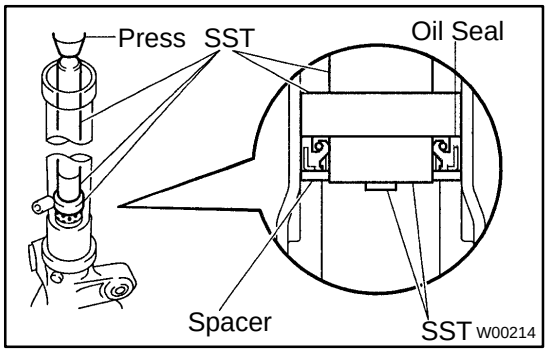

2. INSTALL SPACER AND OIL SEAL

(a) Coat a new oil seal lip with power steering fluid.

(b) Using SST, press in the oil seal.

SST 09950- 60010 (09951- 00240, 09951- 00400, 09952-06010),
09950-70010 (09951-07360)

NOTICE:

- **Make sure to install the oil seal facing the correct direction.**
- **Take care that the oil seal does not get reversed as you install it.**

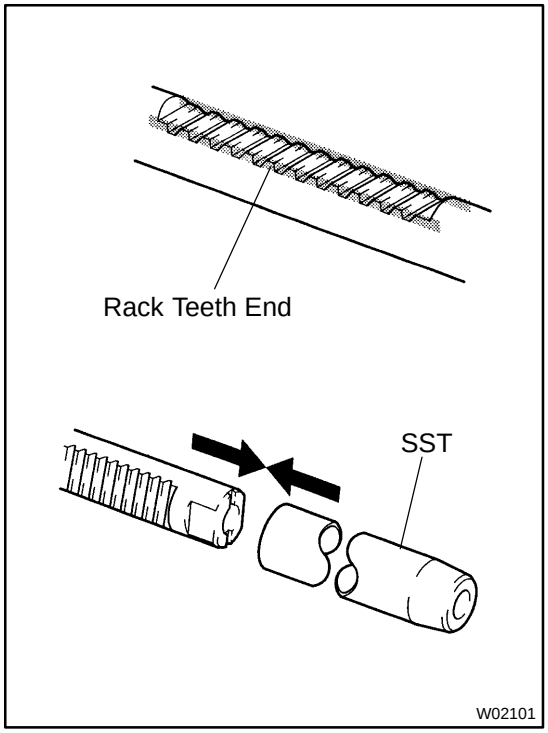

3. INSTALL STEERING RACK

(a) Install SST to the rack.

SST 09631-20102

HINT:

If necessary, scrape the burrs off the rack teeth end and burnish.

(b) Coat SST with power steering fluid.

(c) Install the rack into the rack housing.

NOTICE:

Be careful not to damage the oil seal lip.

(d) Remove the SST.

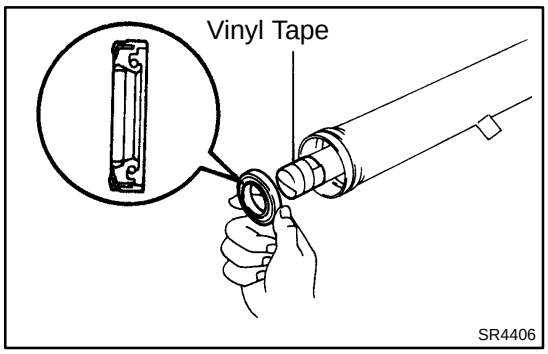

4. INSTALL OIL SEAL AND 2 SPACERS

(a) To prevent oil seal lip damage, wind vinyl tape on the steering rack, and apply power steering fluid.

(b) Coat a new oil seal lip with power steering fluid.

(c) Install the oil seal by pushing it into the rack housing without tilting.

NOTICE:

- **Make sure to install the oil seal facing the correct direction.**
- **Be careful not to damage the oil seal lip.**

(d) Install the 2 spacers into the rack housing.

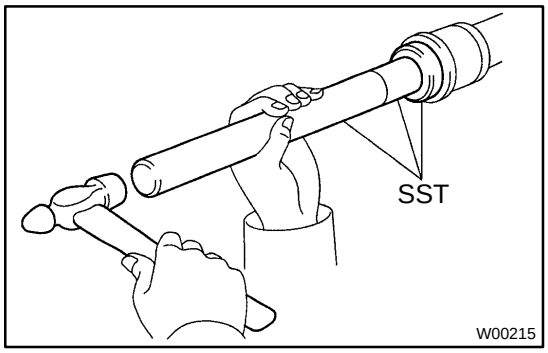

5. INSTALL CYLINDER END STOPPER

(a) Using SST and a hammer, drive in the stopper.

SST 09950- 60010 (09951- 00270, 09951- 00340, 09952-06010),
9950-70010 (09951-07200)

(b) Using snap ring pliers, install the snap ring to the rack housing.

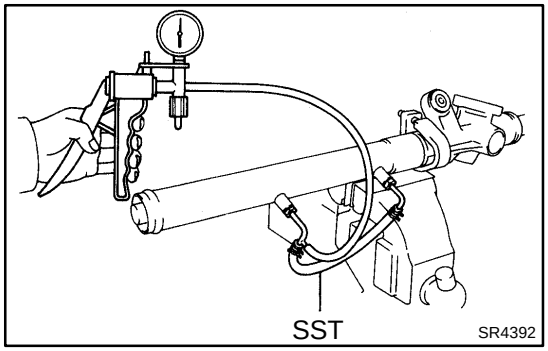

6. AIR TIGHTNESS TEST

(a) Install SST to the rack housing.

SST 09631-12071

NOTICE:

Do not install union seats.

(b) Apply 53.3 kPa (400 mmHg, 15.75 in.Hg) of vacuum for about 30 seconds.

(c) Check that there is no change in the vacuum.

If there is change in the vacuum, check the installation of the oil seals.

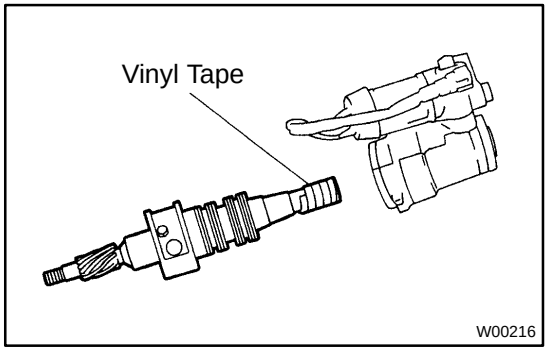

7. INSTALL CONTROL VALVE ASSEMBLY

(a) Coat the teflon rings with power steering fluid.

(b) To prevent oil seal lip damage, wind vinyl tape on the serrated part of the control valve shaft.

(c) Install the valve assembly into the valve housing.

NOTICE:

Be careful not to damage the teflon rings and oil seal.

8. INSTALL CONTROL VALVE HOUSING WITH CONTROL VALVE ASSEMBLY

(a) Coat a new O-ring with power steering fluid, and install it to the housing.

(b) Using a hexagon wrench (6 mm), torque the 2 bolts.
Torque: 18 N·m (185 kgf·cm, 13 ft·lbf)

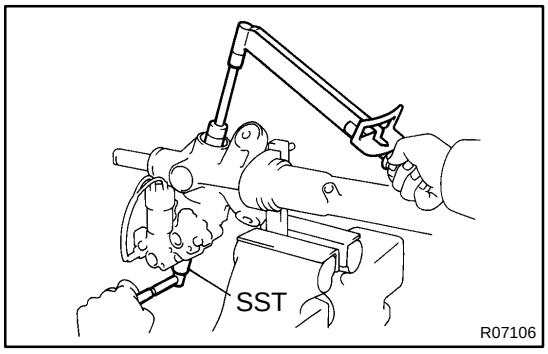

9. INSTALL BEARING, SPACER AND SELF-LOCKING NUT

Using SST to stop the control valve shaft rotating, torque a new nut.

SST 09616-00010
Torque: 39 N·m (400 kgf·cm, 29 ft·lbf)

10. INSTALL RACK HOUSING CAP

(a) Apply sealant to 2 or 3 threads of the cap.
Sealant:
Part No. 08833-00080, THREE BOND 1344, LOCTITE 242 or equivalent

(b) Torque the cap.
Torque: 69 N·m (700 kgf·cm, 50 ft·lbf)

11. INSTALL RACK GUIDE SEAT, RACK GUIDE SPRING AND RACK GUIDE SPRING CAP

(a) Apply sealant to 2 or 3 threads of the cap.
Sealant:
Part No. 08833-00080, THREE BOND 1344, LOCTITE 242 or equivalent

(b) Temporarily install the cap.

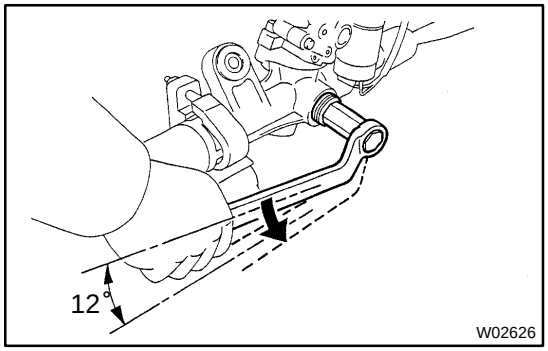

12. ADJUST TOTAL PRELOAD

(a) To prevent the steering rack teeth from damaging the oil seal lip, temporarily install the RH and LH rack ends.

(b) Using a hexagon wrench (24 mm), torque the rack guide spring cap.
Torque: 25 N·m (250 kgf·cm, 18 ft·lbf)

(c) Using a hexagon wrench (24 mm), return the cap 12°.

(d) Using SST, turn the control valve shaft right and left 1 or 2 times.
SST 09616-00010

(e) Using a hexagon wrench (24 mm), loosen the cap until the rack guide spring is not functioning.

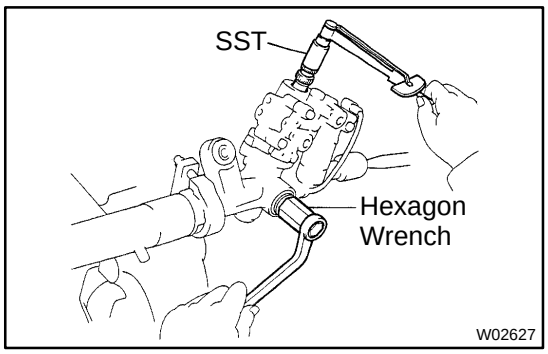

(f) Using SST, a torque wrench and hexagon wrench (24 mm), tighten the cap until the preload is within the specification.
SST 09616-00010
Preload (turning):
1.0 - 1.9 N·m (10 - 20 kgf·cm, 8.7 - 17.4 in.·lbf)

13. INSTALL RACK GUIDE SPRING CAP LOCK NUT

(a) Apply sealant to 2 or 3 threads of the nut.
Sealant:
Part No. 08833-00080, THREE BOND 1344, LOCTITE 242 or equivalent

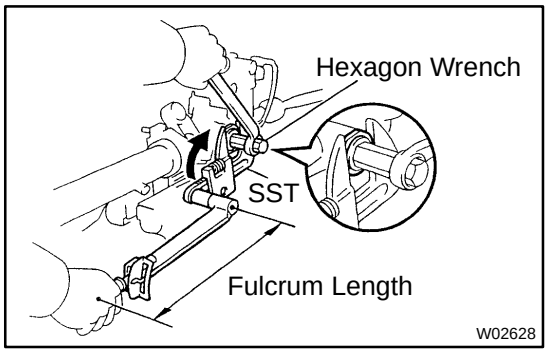

(b) Using a hexagon wrench (24 mm) to hold the rack guide spring cap, and using SST, torque the nut.
SST 09922-10010
Torque: 50 N·m (513 kgf·cm, 37 ft·lbf)

NOTICE:
Use SST 09922-10010 in the direction shown in the illustration.

HINT:
Use a torque wrench with a fulcrum length of 345 mm (13.58 in.).

(c) Recheck the total preload.
Preload (turning):
1.0 - 1.9 N·m (10 - 20 kgf·cm, 8.7 - 17.4 in.·lbf)

(d) Remove the RH and LH rack ends.

14. INSTALL DUST COVER

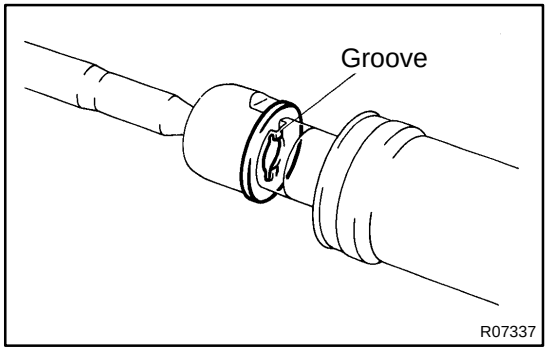

15. INSTALL RH AND LH CLAW WASHERS AND RACK ENDS

(a) Install a new claw washer, and temporarily install the rack end.

HINT:
Align the claws of the washer with the steering rack grooves.

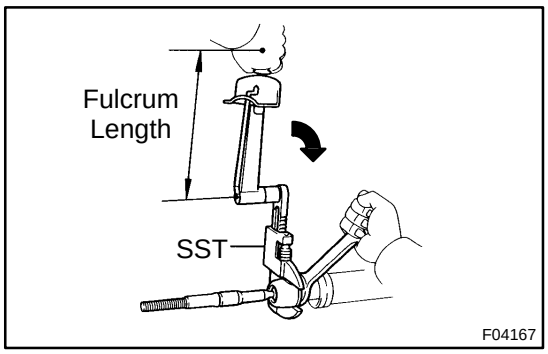

(b) Using a spanner (22 mm) to hold the steering rack steady, and using SST, torque the rack end.
SST 09922-10010
Torque: 77 N·m (782 kgf·cm, 57 ft·lbf)

NOTICE:
Use SST 09922-10010 in the direction shown in the illustration.

HINT:
Use a torque wrench with a fulcrum length of 380 mm (14.96 in.).

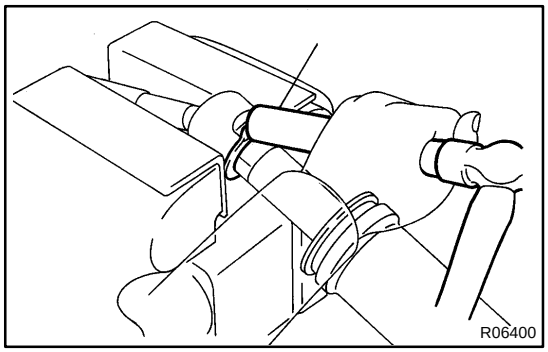

(c) Using a brass bar and a hammer, stake the washer.

NOTICE:
Avoid any impact to the rack.

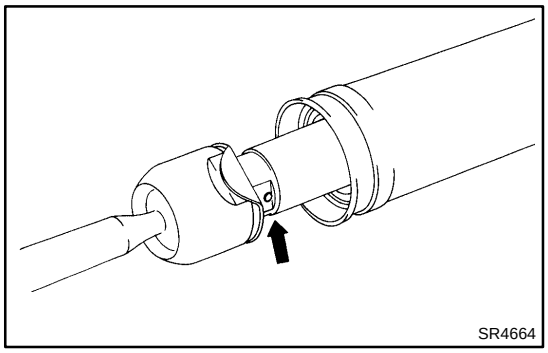

16. INSTALL RH AND LH RACK BOOTS, CLAMPS AND CLIPS

(a) Make sure that the steering rack hole is not clogged with grease.

HINT:
If the hole is clogged, the pressure inside the boot will change after it is assembled and the steering wheel turned.

(b) Install the boot.

NOTICE:
Be careful not to damage or twist the boot.

(c) Install the clamp and clip to the boot.

HINT:
When the rack guide spring cap is toward you, install the clip and clamp in the positions shown in the illustration.

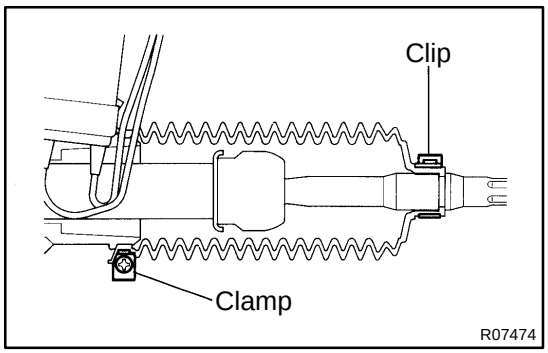

17. INSTALL RH AND LH TIE ROD ENDS AND LOCK NUTS

(a) Screw the lock nut and tie rod end onto the rack end until the matchmarks are aligned.

(b) After adjusting toe-in, torque the nut (See page SA-2).
Torque: 56 N·m (570 kgf·cm, 41 ft·lbf)

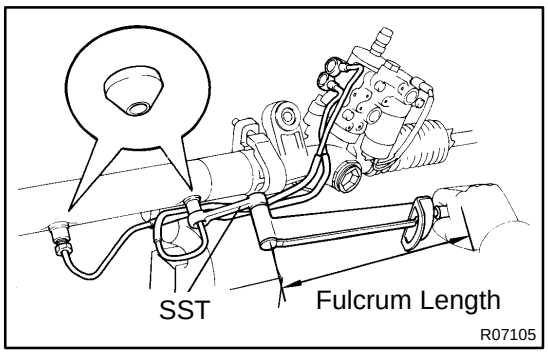

18. INSTALL 2 TURN PRESSURE TUBES

(a) Install the union seat.

(b) Using SST, install the tube.
SST 09633-00020
Torque: 24 N·m (243 kgf·cm, 18 ft·lbf)

HINT:

- Use a torque wrench with a fulcrum length of 300 mm (11.81 in.).
- This torque value is effective in case that SST is parallel to a torque wrench.

(c) Torque the union bolt over 2 new gaskets.
Torque: 34 N·m (350 kgf·cm, 25 ft·lbf)

SR14E-01

INSTALLATION

1. INSTALL PS GEAR ASSEMBLY

(a) Temporarily install the 2 bolts and nuts.

(b) After installing the rack housing bracket and grommet, torque the 2 bolts and nuts.

Torque: 75 N·m (770 kgf·cm, 55 ft·lbf)

2. INSTALL RACK HOUSING BRACKET AND GROMMET

Torque the 2 bolts and nuts.

Torque: 75 N·m (770 kgf·cm, 55 ft·lbf)

3. CONNECT PPS SOLENOID CONNECTOR

4. CONNECT PRESSURE FEED TUBE

Torque the union bolt over a new gasket.

Torque: 49 N·m (500 kgf·cm, 36 ft·lbf)

5. CONNECT RETURN TUBE

Torque the union bolt over 2 new gaskets.

Torque: 49 N·m (500 kgf·cm, 36 ft·lbf)

6. CONNECT RH AND LH TIE ROD ENDS (See page SA-17)

7. CONNECT INTERMEDIATE SHAFT (See page SR-21)

8. INSTALL FR SUSPENSION MEMBER PROTECTOR

Tighten the 4 bolts.

9. INSTALL ENGINE UNDER COVER

Install the 10 bolts.

10. POSITION FRONT WHEELS FACING STRAIGHT AHEAD

HINT:

Do it with the front of the vehicle jacked up.

11. CENTER SPIRAL CABLE (See page SR-21)

12. INSTALL STEERING WHEEL

(a) Align the matchmarks on the wheel and steering column main shaft.

(b) Temporarily tighten the wheel set nut.

(c) Connect the connector.

13. BLEED POWER STEERING SYSTEM (See page SR-3)

14. CHECK STEERING WHEEL CENTER POINT

15. TORQUE STEERING WHEEL SET NUT

Torque: 35 N·m (360 kgf·cm, 26 ft·lbf)

16. INSTALL STEERING WHEEL PAD (See page SR-21)

17. CHECK FRONT WHEEL ALIGNMENT (See page SA-2)

PROGRESSIVE POWER STEERING (PPS)

SR14F-01

LOCATION

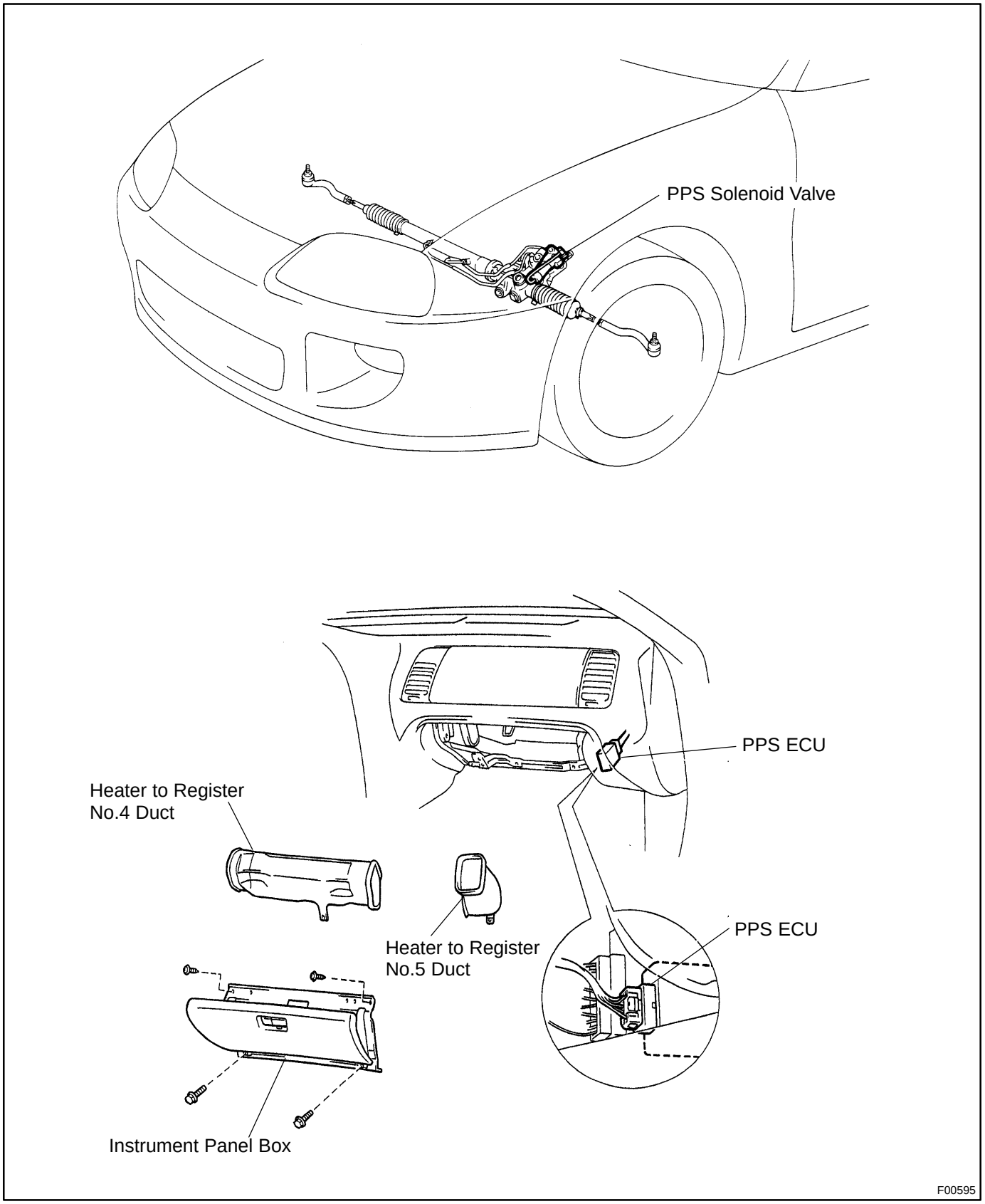

F00595

SR14G-01

INSPECTION

Wire Harness Side:

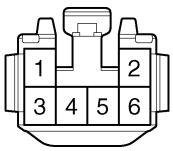

F03098

1. INSPECT ECU-IG FUSE (Instrument panel J/B)

2. INSPECT PPS ECU CIRCUIT

(a) Disconnect the PPS ECU connector.

(b) Inspect the connector on wire harness side, as shown in the illustration.

Tester connection	Condition	Specified condition
4 - Body ground	Ignition switch ON	Battery positive voltage
6 - Body ground	Ignition switch ON	Continuity
*5 - 6	Ignition switch ON. Spin the rear wheel on one side with jacking or lifting UP.	0 → 5 or more → 0

If the circuit is not as specified, check and replace the wire harness.

*If the circuit is not as specified, inspect the speed sensor.

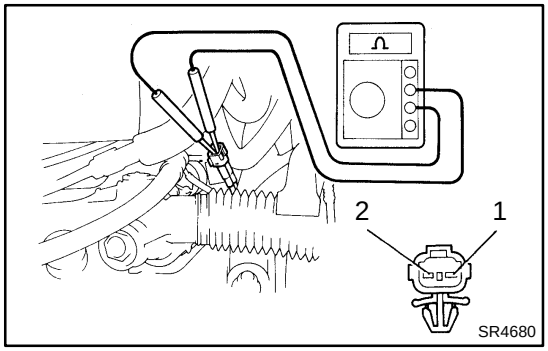

SR4680

3. INSPECT PPS SOLENOID VALVE

(a) Disconnect the PPS solenoid connector.

(b) Measure the resistance between the terminals of the solenoid 1 and 2.

Resistance: 6 - 11 Ω

If it is not as specified, replace the pressure control valve with the solenoid valve.

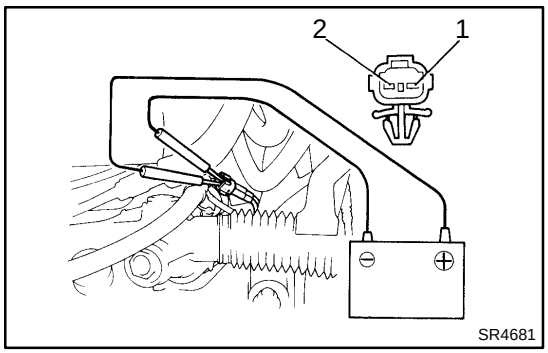

SR4681

(c) Check the PPS solenoid operation.

(1) Connect the battery positive terminal to the solenoid terminal 1.

(2) Connect the battery negative terminal to the solenoid terminal 2.

(3) Check that the solenoid makes a ”clicks” sound.

If it is faulty, replace the pressure control valve with the solenoid valve.

NOTICE:

- **Do not apply voltage for more than 30 seconds to avoid burning out the solenoid.**
- **If repeating this step, wait until the solenoid cools down enough that it can be touched by hand.**

(d) Connect the PPS solenoid connector.

Wire Harness Side:

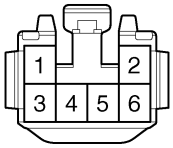

F03098

(e) Inspect the PPS solenoid valve circuit.
(1) Disconnect the PPS ECU connector.
(2) Check continuity between the terminals of the connector on wire harness side, as shown in the illustration.

Tester connection	Specified condition
1 - 6	No continuity
2 - 6	No continuity

If it is not as specified, repair or replace wire harness or connector.
(3) Connect the PPS ECU connector.

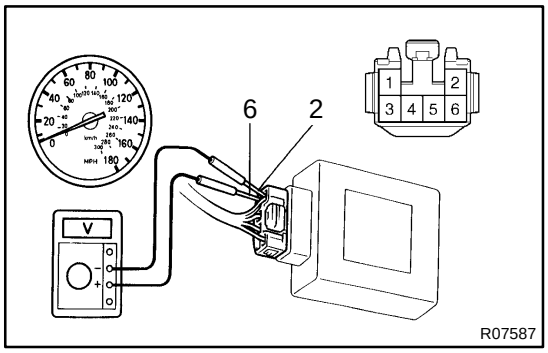

R07587

4. INSPECT PPS ECU

(a) Jack up the vehicle and support it on stands.
(b) Start the engine.
(c) Measure the voltage of ECU.
(1) Using a voltmeter, measure the voltage between ECU terminals 2 and 6 while the engine is idling.
Standard voltage: 0.15 - 0.20 V

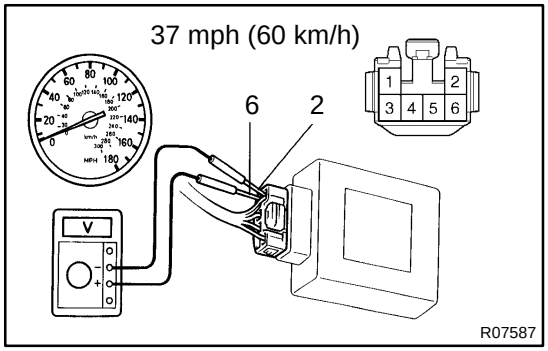

R07587

(2) Place the transmission in gear and while running at about 62 mph (100 km/h), measure the voltage between ECU terminals 2 and 6.
Standard voltage:
2JZ-GE: 0.06 - 0.17 v
2JZ-GTE: 0.07 - 0.17 v

If no voltage, try another ECU for SUPRA.
(d) Lower the vehicle.

TROUBLESHOOTING

SA0OP-02

PROBLEM SYMPTOMS TABLE

Use the table below to help you find the cause of the problem. The numbers indicate the priority of the likely cause of the problem. Check each part in order. If necessary, replace these parts.

Symptom	Suspect Area	See page
Wander/pulls	1. Tires (Worn or improperly inflated)	SA-2
	2. Wheel alignment (Incorrect)	SA-3
		SA-8
	3. Steering linkage (Loosen or worn)	-
	4. Hub bearings (Loosen or worn)	SA-11
		SA-41
	5. Steering gear (Out of adjustment or broken)	-
Bottoming	1. Vehicle (Overloaded)	-
	2. Spring (Weak)	SA-19
		SA-89
	3. Shock absorber (Worn out)	SA-19
		SA-89
Sways/pitches	1. Tires (Worn or improperly inflated)	SA-2
	2. Stabilizer bar (Bent or broken)	SA-37
		SA-107
	3. Shock absorber (Worn out)	SA-19
		SA-89
Front wheel shimmy	1. Tires (Worn or improperly inflated)	SA-2
	2. Wheels (Out of balance)	SA-2
	3. Shock absorber (Worn out)	SA-19
	4. Wheel alignment (Incorrect)	SA-3
	5. Ball joints (Worn)	SA-28
		SA-32
	6. Hub bearings (Loosen or worn)	SA-11
	7. Steering linkage (Loosen or worn)	-
	8. Steering gear (Out of adjustment or broken)	-
Abnormal tire wear	1. Tires (Improperly inflated)	SA-2
	2. Wheel alignment (Incorrect)	SA-3
		SA-8
	3. Suspension parts (Worn out)	-
	4. Shock absorber (Worn out)	SA-19
		SA-89
Noise in rear differential	1. Oil level (Low or wrong grade)	SA-59
	2. Excessive backlash between pinion and ring gear	SA-62
	3. Ring, pinion or side gears (Worn or chipped)	SA-62
	4. Pinion shaft bearing (Worn)	SA-62
	5. Side bearing (Worn)	SA-62
	6. Differential bearing (Loosen or worn)	SA-62
Oil leak from rear differential	1. Oil level (Too high or wrong grade)	SA-59
	2. Drive pinion oil seal (Worn or damaged)	SA-62
	3. Side gear oil seal (Worn or damaged)	SA-62
	4. Companion flange (Loose or damaged)	SA-62
	5. Side gear shaft (Damaged)	SA-62

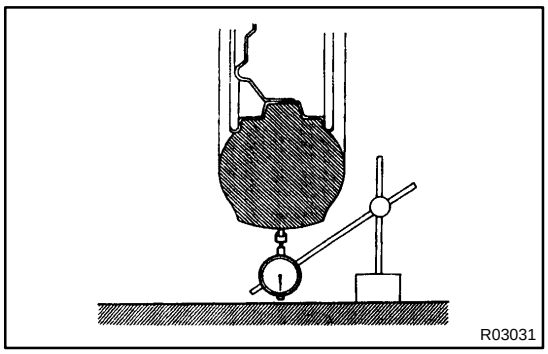

TIRE AND WHEEL

SA0OQ-01

INSPECTION

1. INSPECT TIRE

(a) Check the tires for wear and for the proper inflation pressure.

Cold tire inflation pressure:

2JZ-GE

Tire size	Front kPa (kgf/cm^2, psi)	Rear kPa (kgf/cm^2, psi)
225/50R16 92V	230 (2.3, 33)	-
245/45R16 94V	-	230 (2.3, 33)

2JZ-GTE

Tire size	Front kPa (kgf/cm^2, psi)	Rear kPa (kgf/cm^2, psi)
235/45ZR17	230 (2.3, 33)	-
255/40ZR17	-	230 (2.3, 33)

(b) Check the tire runout.

Tire runout: 1.4 mm (0.055 in.) or less

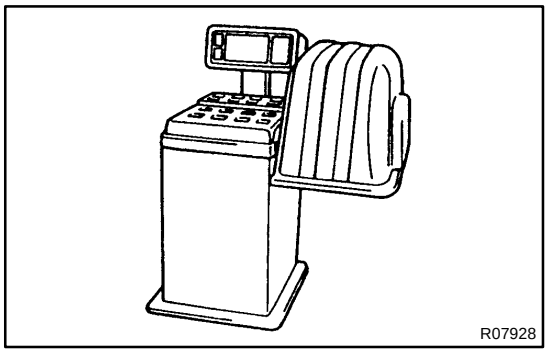

2. INSPECT WHEEL BALANCE

(a) Check and adjust the Off-the-car balance.

(b) If necessary, check and adjust the On-the-car balance.

Imbalance after adjustment: 5.0 g (0.011 lb) or less

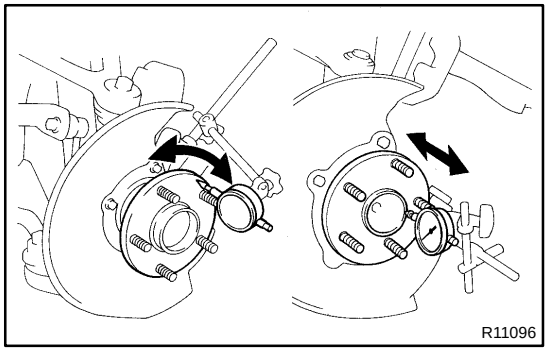

3. CHECK WHEEL BEARING LOOSENESS

(a) Check the axle bearing backlash.

Maximum: 0.05 mm (0.0020 in.)

(b) Check the axle hub deviation.

Maximum: 0.05 mm (0.0020 in.)

4. CHECK FRONT SUSPENSION FOR LOOSENESS

5. CHECK STEERING LINKAGE FOR LOOSENESS

6. CHECK BALL JOINT FOR LOOSENESS

7. CHECK SHOCK ABSORBER WORKS PROPERLY

★ Check for oil leak.

★ Check mounting bushings for wear.

★ Check front and rear of the vehicle for bounce.

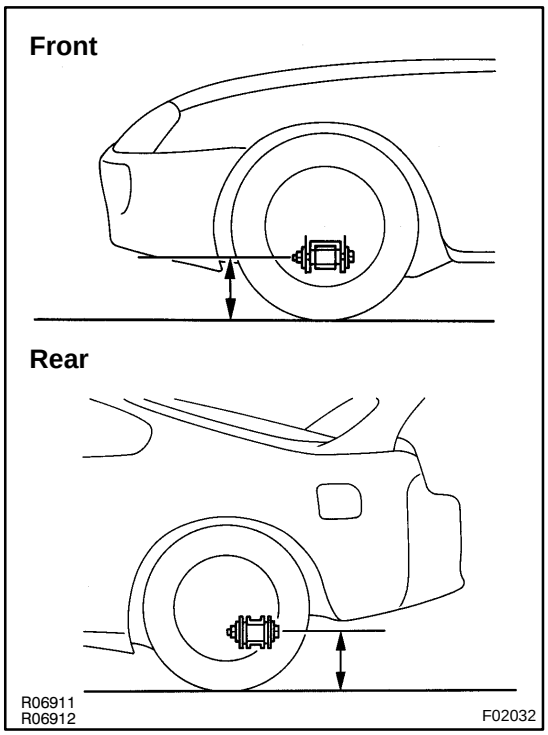

FRONT WHEEL ALIGNMENT

SA0OR-01

INSPECTION

1. MEASURE FRONT AND REAR VEHICLE HEIGHT

		Tire size	Height
2JZ-GE	Front*1	225/50R16 92V	186 mm (7.32 in.)
	Rear*2	245/45R16 94V	246 mm (9.68 in.)
2JZ-GTE	Front*1	235/45ZR17	188 mm (7.40 in.)
	Rear*2	255/40ZR17	254 mm (10.00 in.)

***1: Front measuring point**

Measure from the ground to the center of the lower suspension arm front mounting bolt.

***2: Rear measuring point**

Measure from the ground to the center of the lower suspension arm No.2 mounting bolt.

NOTICE:

Before inspecting the wheel alignment, adjust the vehicle height to the specification.

If the vehicle height is not within the specification, try adjust it by pushing down on or lifting the body.

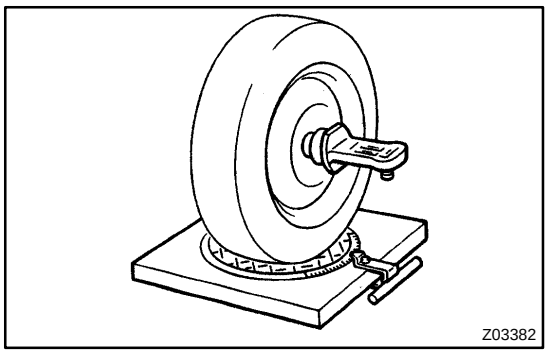

2. INSTALL CAMBER- CASTER- KINGPIN GAUGE ONTO VEHICLE OR POSITION VEHICLE ON WHEEL ALIGNMENT TESTER

Follow the specific instructions of the equipment manufacturer.

3. INSPECT CAMBER, CASTER AND STEERING AXIS INCLINATION

	2JZ-GE	2JZ-GTE
Camber	-0 °20' ± 45' (-0.33 ° ± 0.75°)	-0 °30' ± 45' (-0.5 ° ± 0.75°)
Left-right error	30' (0.5°) or less	30' (0.5°) or less
Caster	3°20' ± 45' (3.33° ± 0.75°)	3°30' ± 45' (3.5° ± 0.75°)
Left-right error	30' (0.5°) or less	30' (0.5°) or less
Steering axis inclination <Reference>	9°35' ± 45' (9.58° ± 0.75°)	9°45' ± 45' (9.75° ± 0.75°)

If the steering axis inclination is not within the specification, after camber and caster have been correctly adjusted, recheck the steering knuckle and front wheel for bearing or looseness.

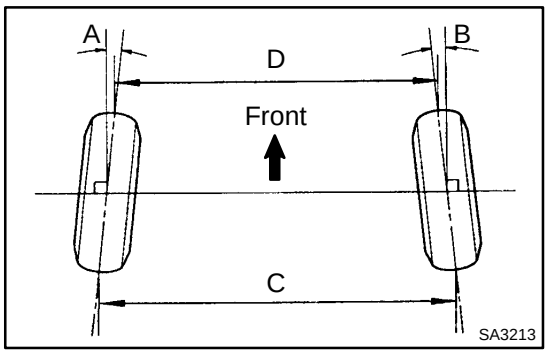

4. INSPECT TOE-IN

Toe-in (Total)	A + B: 0° ± 12' (0° ± 0.2°) C - D: 0 ± 2 mm (0 ± 0.08 in.)

If toe-in is not within specification, adjust by the tie rod end.

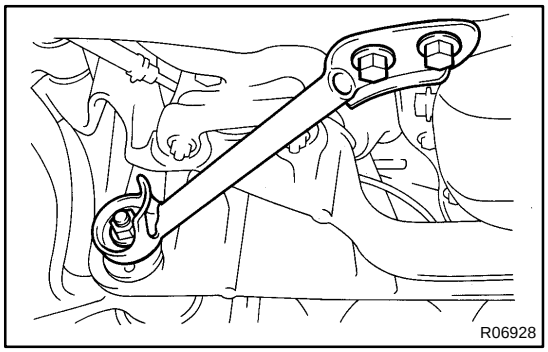

5. ADJUST CAMBER AND CASTER

(a) Remove the engine under cover.
(b) Remove the nut, 2 bolts and lower arm bracket stay.

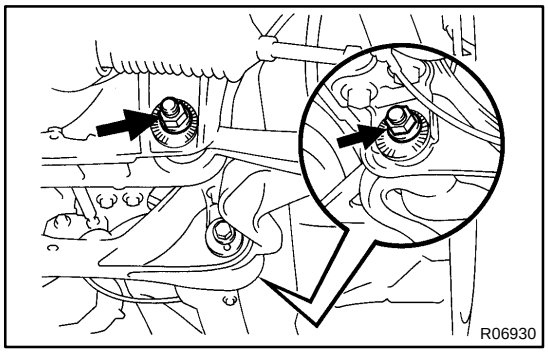

(c) Loosen the front and/or rear adjusting cam nuts.
(d) Adjust the camber and caster by front and/or rear adjusting cams (See adjustment chart).

HINT:
Try to adjust the camber and caster to the center value.

(e) Torque the front and/or rear adjusting cam nuts.
Torque: 226 N·m (2,300 kgf·cm, 166 ft·lbf)
(f) Install the lower arm bracket stay.
Torque:
Bolt: 44 N·m (450 kgf·cm, 32 ft·lbf)
Nut: 59 N·m (600 kgf·cm, 43 ft·lbf)
(g) Install the engine under cover.

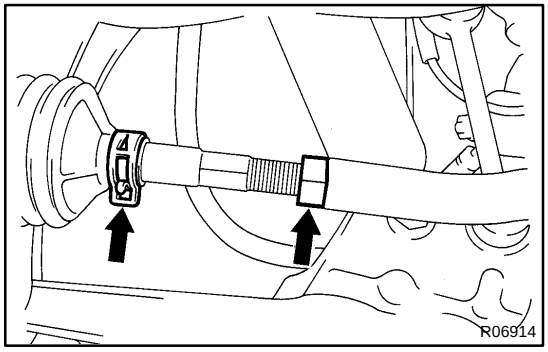

6. ADJUST TOE-IN

(a) Remove the boot clamps.
(b) Loosen the tie rod end lock nuts.

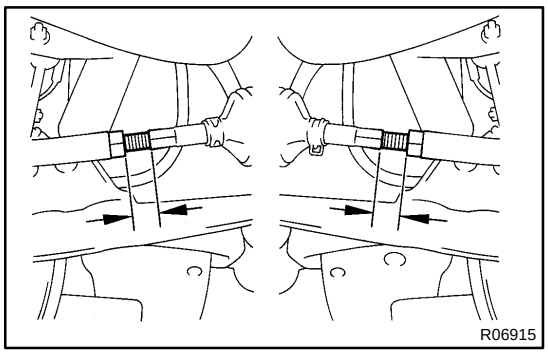

(c) Turn the left and right rack ends an equal amount to adjust the toe-in.

HINT:

★ Make sure that the lengths of the left and right rack ends are the same.

★ Try to adjust the toe-in to the center value.

Rack end length difference:
1.5 mm (0.059 in.) or less

(d) Tighten the tie rod end lock nut.

Torque: 56 N·m (570 kgf·cm, 41 ft·lbf)

(e) Place the boot on the seat and clip it.

HINT:

Make sure that the boots are not twisted.

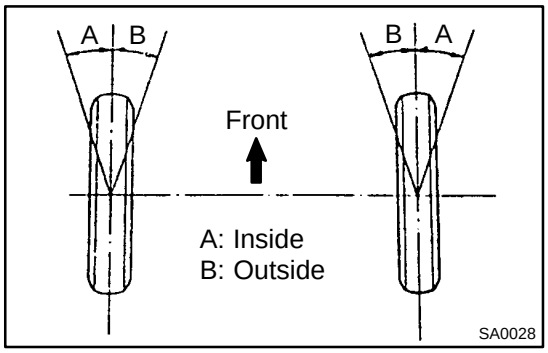

7. INSPECT WHEEL ANGLE

Turn the steering wheel fully and measure the turning angle.

	2JZ-GE	2JZ-GTE
Inside wheel	35˚00' (33˚00' - 36˚00') 35˚ (33˚ – 36˚)	34˚55' (33˚55' - 36˚55') 34.92˚ (32.92˚ – 35.92˚)
Outside wheel <Reference>	30˚45' (30.75˚)	30˚35' (30.58˚)

If the wheel angle are not within the specifications, check to see if the lengths of the left and right rack ends are the same.

HINT:

If the tie rods lengths are not equal, the wheel angle cannot be adjusted properly. Reinspect the toe-in after adjusting the tie rods lengths.

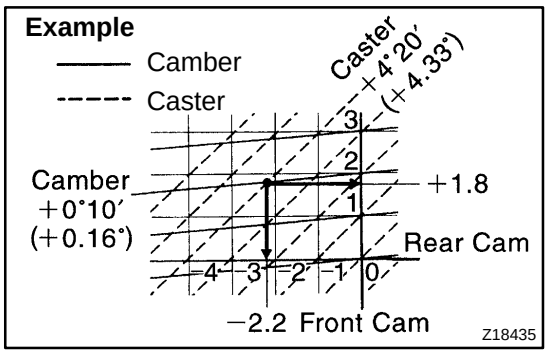

8. HOW TO READ ADJUSTMENT CHART

(a) Mark on the graph the measurements taken from the vehicle.

Example (2JZ-GE):
Camber: +0˚10' (+0.16˚)
Caster: +4˚20' (+4.33˚)

(b) Read from the graph the amounts of the front and/or rear cams to be adjusted.

Amount to turn adjusting cam (by graduation):
Front cam: + (Longer) 1.8
Rear cam: - (Shorter) 2.2

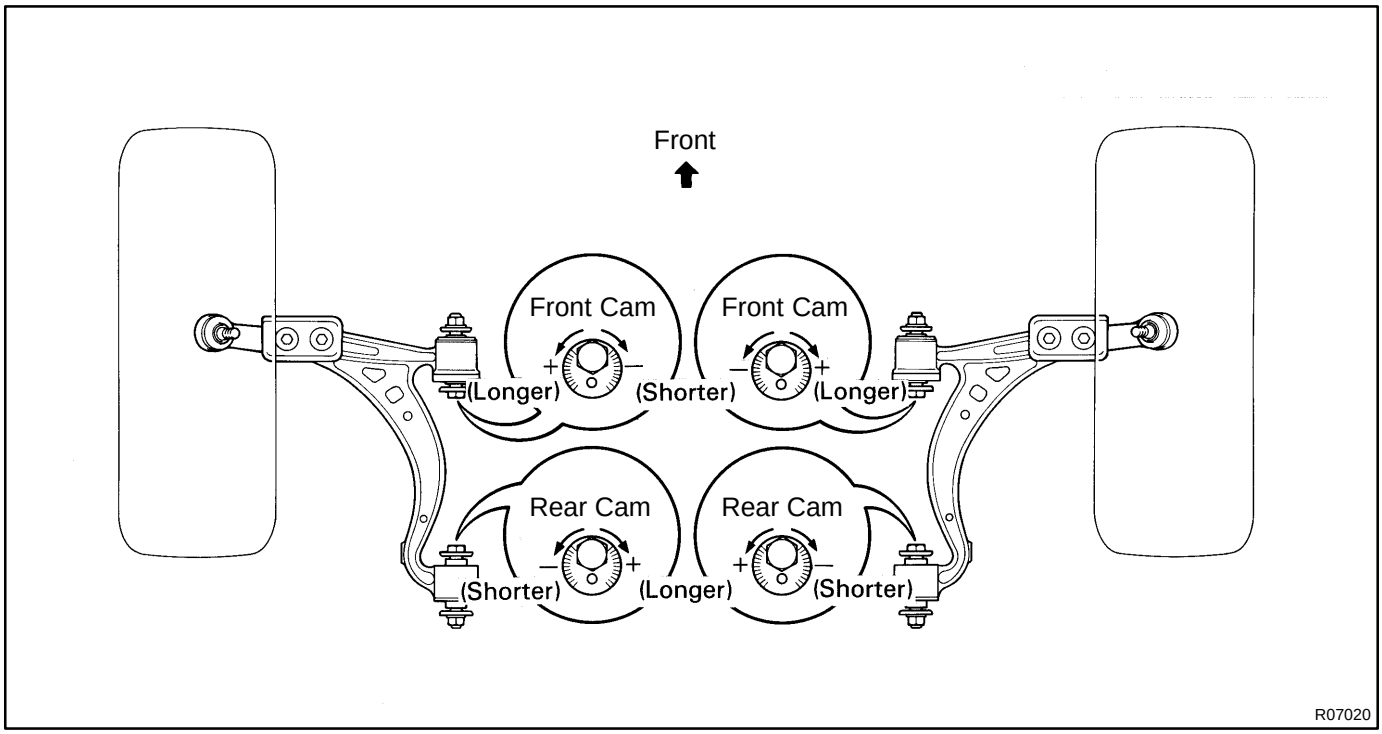

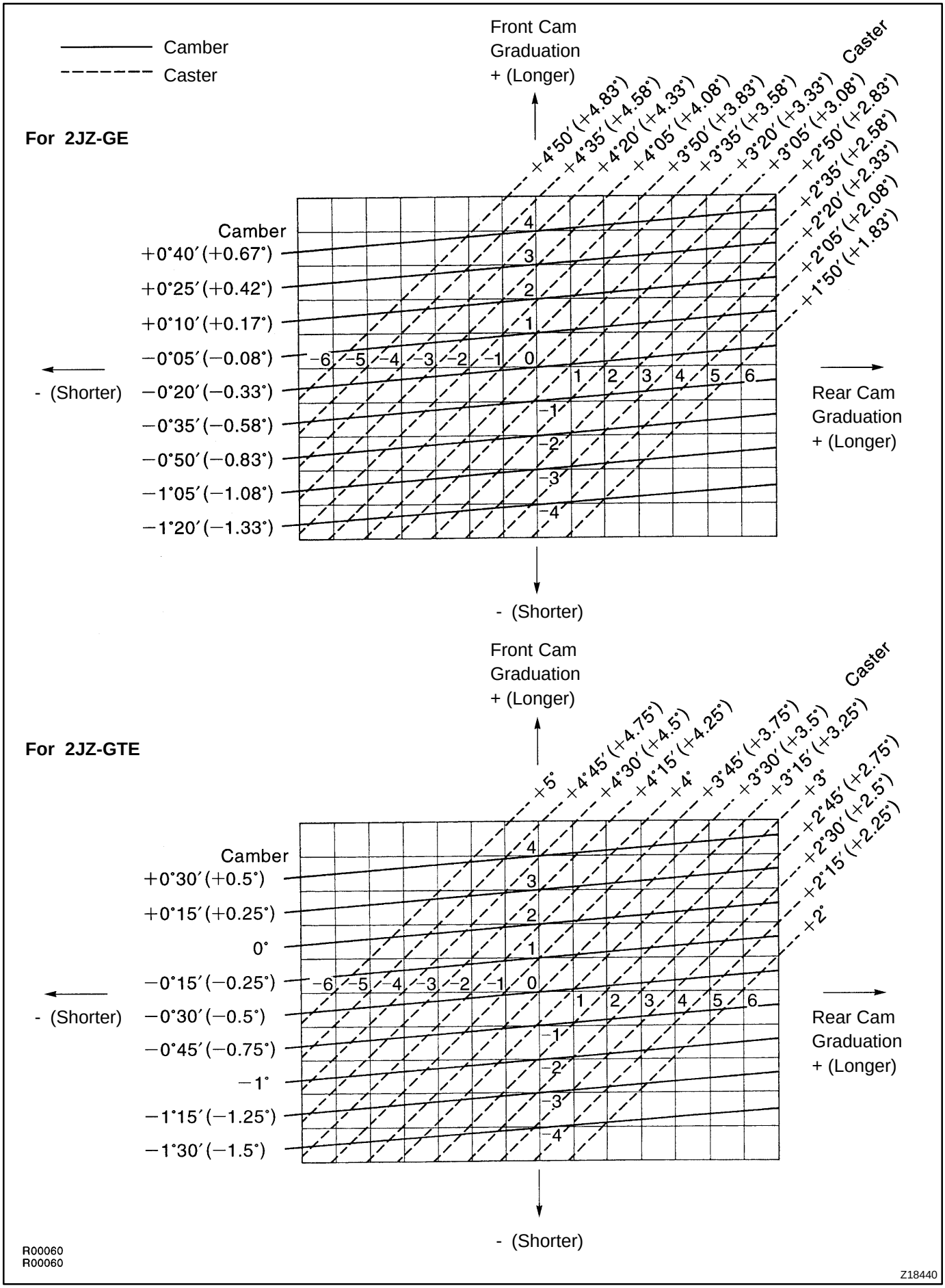
Camber
Caster
For 2JZ-GE
Front Cam
Graduation
+ (Longer)
Caster
+4°50′ (+4.83°)
+4°35′ (+4.58°)
+4°20′ (+4.33°)
+4°05′ (+4.08°)
+3°50′ (+3.83°)
+3°35′ (+3.58°)
+3°20′ (+3.33°)
+3°05′ (+3.08°)
+2°50′ (+2.83°)
+2°35′ (+2.58°)
+2°20′ (+2.33°)
+2°05′ (+2.08°)
+1°50′ (+1.83°)
Camber
+0°40′ (+0.67°)
+0°25′ (+0.42°)
+0°10′ (+0.17°)
−0°05′ (−0.08°)
−0°20′ (−0.33°)
−0°35′ (−0.58°)
−0°50′ (−0.83°)
−1°05′ (−1.08°)
−1°20′ (−1.33°)
- (Shorter)
Rear Cam
Graduation
+ (Longer)
- (Shorter)
For 2JZ-GTE
Front Cam
Graduation
+ (Longer)
Caster
+5°
+4°45′ (+4.75°)
+4°30′ (+4.5°)
+4°15′ (+4.25°)
+4°
+3°45′ (+3.75°)
+3°30′ (+3.5°)
+3°15′ (+3.25°)
+3°
+2°45′ (+2.75°)
+2°30′ (+2.5°)
+2°15′ (+2.25°)
+2°
Camber
+0°30′ (+0.5°)
+0°15′ (+0.25°)
0°
−0°15′ (−0.25°)
−0°30′ (−0.5°)
−0°45′ (−0.75°)
−1°
−1°15′ (−1.25°)
−1°30′ (−1.5°)
- (Shorter)
Rear Cam
Graduation
+ (Longer)
- (Shorter)
R00060
R00060
Z18440

REAR WHEEL ALIGNMENT

SA0OS-02

INSPECTION

1. MEASURE REAR VEHICLE HEIGHT

(See page SA-3)

2. INSTALL CAMBER- CASTER- KINGPIN GAUGE ONTO VEHICLE OR POSITION VEHICLE ON WHEEL ALIGNMENT TESTER

Follow the specific instructions of the equipment manufacturer.

3. INSPECT CAMBER

	2JZ-GE	2JZ-GTE
Camber	-1 °35' ± 45' (-1.58 ° ± 0.75°)	-1 °30' ± 45' (-1.5 ° ± 0.75°)
Left-right error	30' (0.5°) or less	30' (0.5°) or less

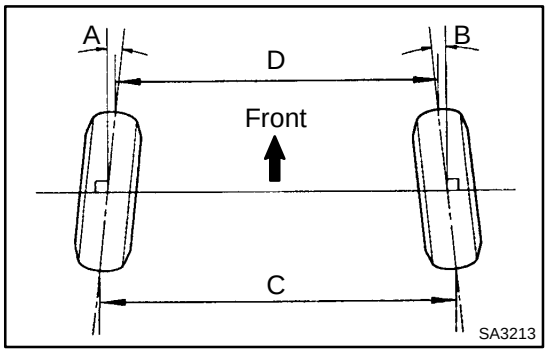

4. INSPECT TOE-IN

Toe-in (Total)	A + B: 0°18' ± 12' (0.3° ± 0.2°) C - D: 3 ± 2 mm (0.12 ± 0.08 in.)

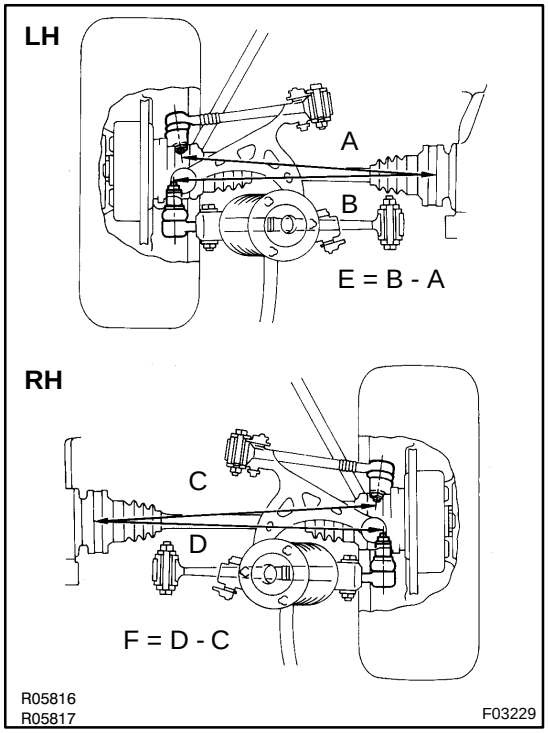

5. ADJUST CAMBER AND TOE-IN

(a) Measure the length of the lower suspension arm No.1 and No.2, as shown in the illustration.

Length:

(E - F) or (F - E) should be less than 4.0 mm (0.16 in.).

If not, adjust the length of the arms by turning the adjusting cam as shown, until (E - F) or (F - E) is less than 4.0 mm (0.16 in.).

(b) Measure the camber and toe-in.

If the camber and toe-in are still not within the specification, adjust the camber and toe-in with the adjusting cam.

(c) Remove the bolt and disconnect the parking brake cable bracket.

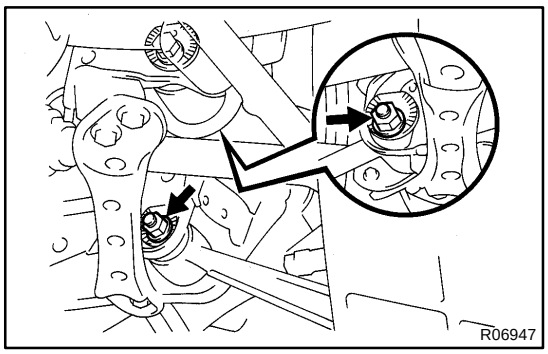

(d) Loosen and adjust the No.1 and/or No.2 cams.
(e) Adjust camber and toe-in by turning the No.1 and/or No.2 cams (See adjustment chart).

HINT:
Try to adjust the camber and toe-in to the center value.

(f) Torque the No.1 and/or No.2 cam nuts.
Torque: 184 N·m (1,880 kgf·cm, 136 ft·lbf)
(g) Connect the parking brake cable bracket with the bolt.

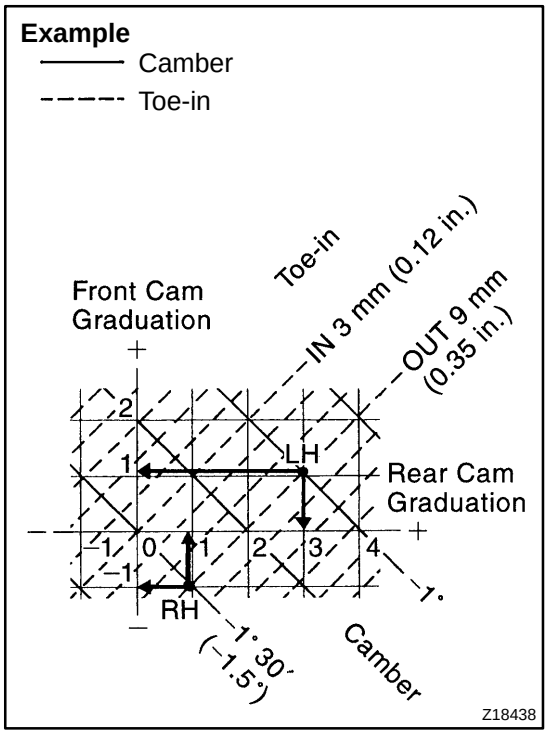

6. HOW TO READ ADJUSTMENT CHART

(a) Mark on the graph the measurements taken from vehicle.
Example (2JZ-GTE):
Camber (LH): -1°00' (-1°)
Camber (RH): –1°30' (-1.5°)

(b) Read from the graph the amounts of the front and/or rear cam to be adjusted.
Amount to turn adjusting cam (by graduation)
LH Front cam: + (Longer) 1.1
LH Rear cam: + (Longer) 3.0
RH Front cam: - (Shorter) 1.0
RH Rear cam: + (Longer) 0.9

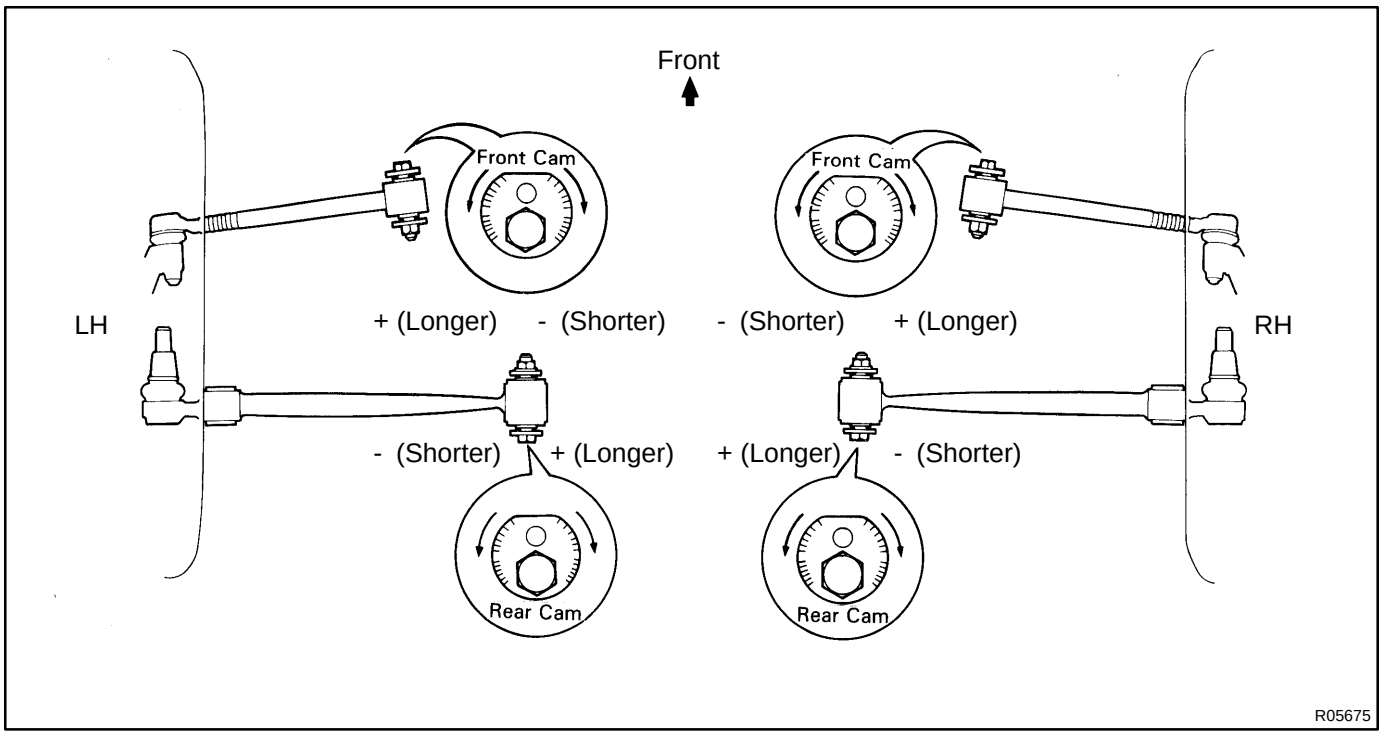

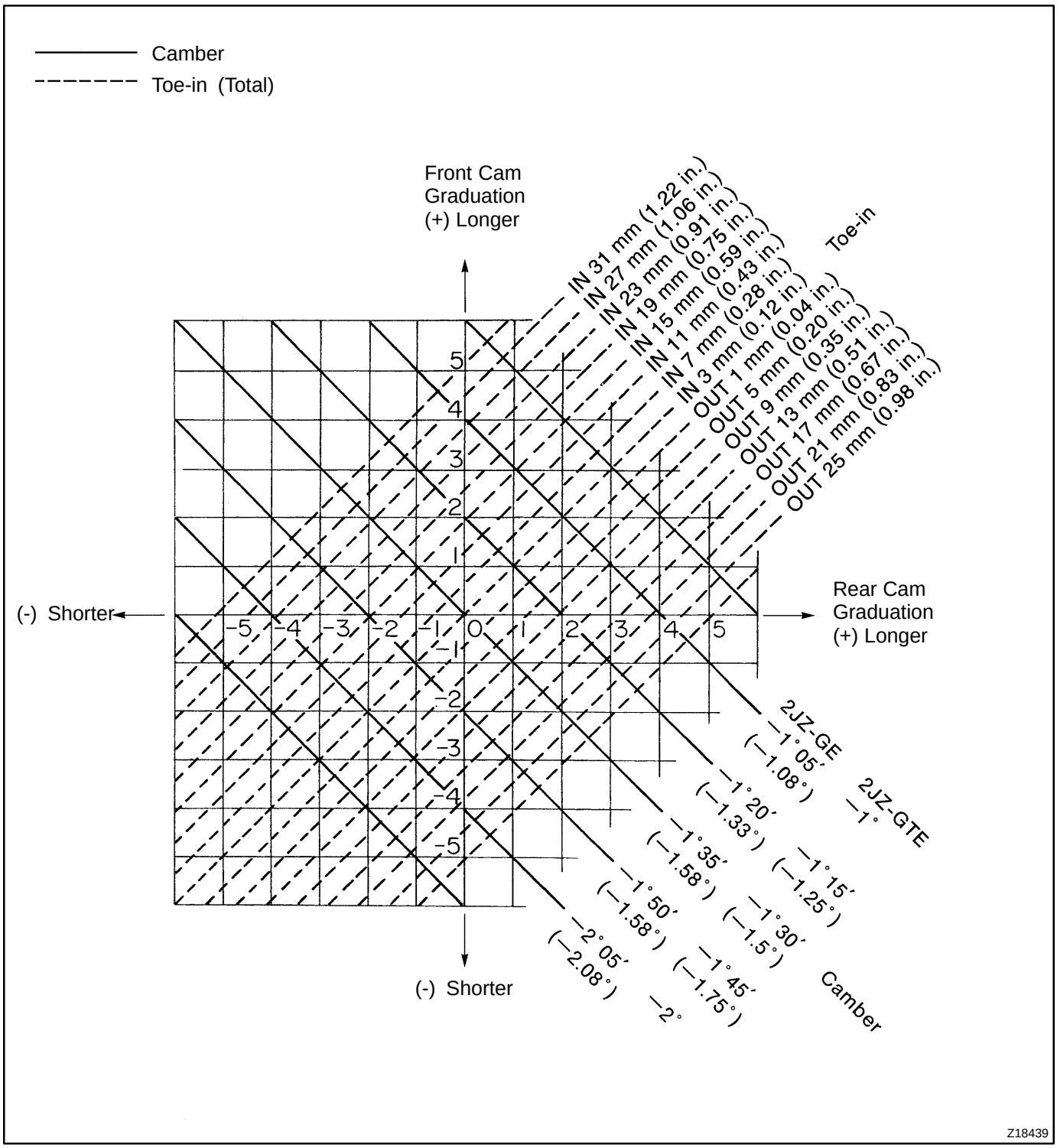
Camber
Toe-in (Total)
Front Cam Graduation (+) Longer
(-) Shorter
Rear Cam Graduation (+) Longer
(-) Shorter
Toe-in
IN 31 mm (1.22 in.)
IN 27 mm (1.06 in.)
IN 23 mm (0.91 in.)
IN 19 mm (0.75 in.)
IN 15 mm (0.59 in.)
IN 11 mm (0.43 in.)
IN 7 mm (0.28 in.)
IN 3 mm (0.12 in.)
OUT 1 mm (0.04 in.)
OUT 5 mm (0.20 in.)
OUT 9 mm (0.35 in.)
OUT 13 mm (0.51 in.)
OUT 17 mm (0.67 in.)
OUT 21 mm (0.83 in.)
OUT 25 mm (0.98 in.)
2JZ-GE
−1° 05′ (−1.08°)
2JZ-GTE
−1°
−1° 20′ (−1.33°)
−1° 35′ (−1.58°)
−1° 50′ (−1.58°)
−2° 05′ (−2.08°)
−1° 15′ (−1.25°)
−1° 30′ (−1.5°)
−1° 45′ (−1.75°)
−2°
Camber
Z18439

FRONT AXLE HUB

COMPONENTS

SA0OT-02

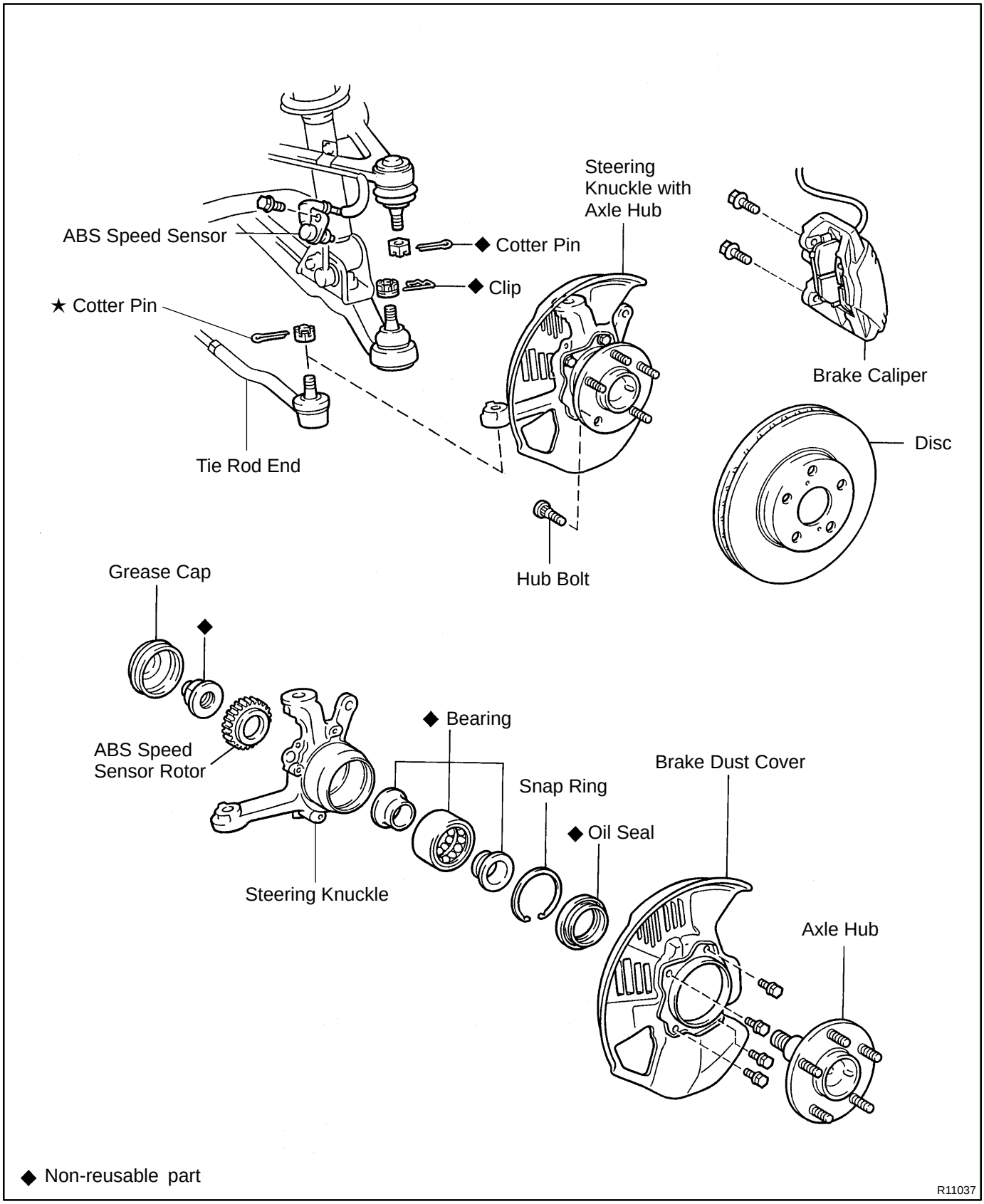

SA0OU-02

REMOVAL

1. REMOVE FRONT WHEEL

Torque: 103 N·m (1,050 kgf·cm, 76 ft·lbf)

2. REMOVE BRAKE CALIPER AND DISC

(a) Remove the 2 bolts and brake caliper from the steering knuckle.

Torque: 118 N·m (1,200 kgf·cm, 87 ft·lbf)

(b) Support the brake caliper securely.

(c) Place matchmarks on the disc and axle hub.

(d) Remove the disc.

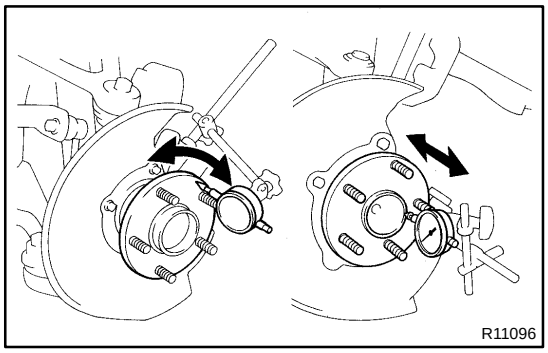

3. CHECK BEARING BACKLASH AND AXLE HUB DEVIATION

(a) Using a dial indicator near the center of the axle hub and check the backlash in the bearing shaft direction.

Maximum: 0.05 mm (0.0020 in.)

If the backlash exceeds the maximum, replace the bearing.

(b) Using a dial indicator, check the deviation at the surface of the axle hub outside the hub bolt.

Maximum: 0.05 mm (0.0020 in.)

If the deviation exceeds the maximum, replace the bearing.

4. DISCONNECT ABS SPEED SENSOR FROM STEERING KNUCKLE

Remove the bolt and disconnect the ABS speed sensor from the steering knuckle.

Torque: 7.8 N·m (80 kgf·cm, 69 in.·lbf)

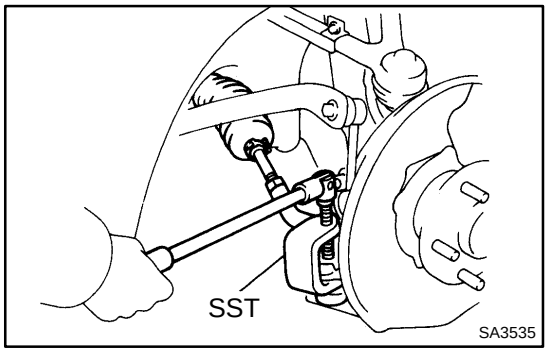

5. DISCONNECT TIE ROD END FROM STEERING KNUCKLE

(a) Remove the cotter pin and nut.

Torque: 49 N·m (500 kgf·cm, 36 ft·lbf)

(b) Using SST, disconnect the tie rod end from the steering knuckle.

SST 09611-12010

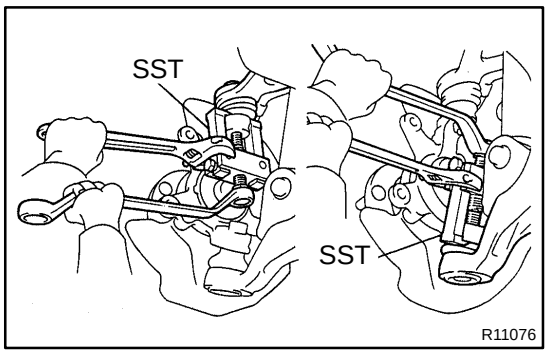

6. REMOVE STEERING KNUCKLE

(a) Remove the upper side of the cotter pin and nut.
Torque: 103 N·m (1,050 kgf·cm, 76 ft·lbf)

(b) Remove the lower side of the clip and nut.
Torque: 125 N·m (1,270 kgf·cm, 92 ft·lbf)

(c) Using SST, remove the steering knuckle from the upper and lower suspension arms.
SST 09628-6201 1

SA0OV-01

DISASSEMBLY

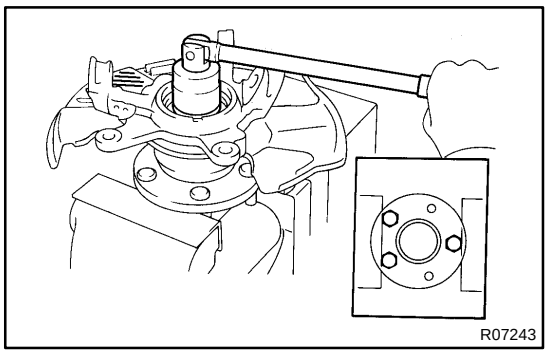

1. REMOVE HUB GREASE CAP

Using a screwdriver, remove the grease cap from the steering knuckle.

2. REMOVE FRONT AXLE HUB LOCK NUT AND ABS SPEED SENSOR ROTOR

(a) Clamp the axle hub in a soft jaw vise.

HINT:

Close vise until it holds hub bolt. Do not tighten further.

(b) Using a chisel and hammer, loosen the staked part of the lock nut and remove it.

(c) Remove the sensor rotor.

NOTICE:

Take care not to scratch the serrations of the sensor rotor.

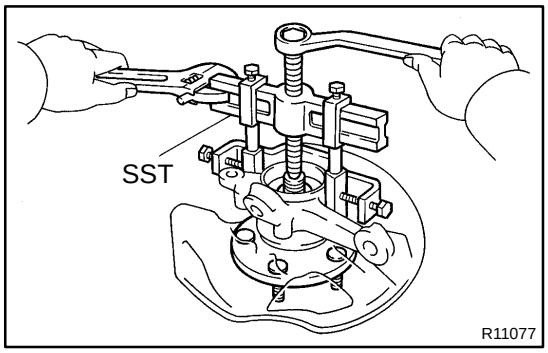

3. REMOVE AXLE HUB FROM STEERING KNUCKLE

(a) Remove the 4 bolts and shift the brake dust cover toward the axle hub side (outside).

(b) Using SST, remove the axle hub from the steering knuckle.

SST 09950-40010 (09951-04010, 09952-04010, 09953-04020, 09954-04010, 09955-04030, 09958-04010)

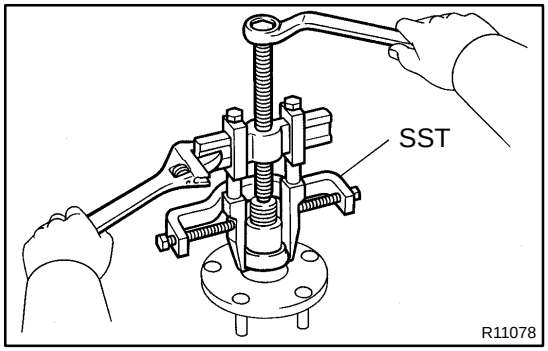

4. REMOVE INNER RACE (OUTSIDE) FROM AXLE HUB

Using SST, remove the inner race from the axle hub.

SST 09950-40010 (09951-04010, 09952-04010, 09953-04020, 09954-04010, 09955-04010, 09958-04010)

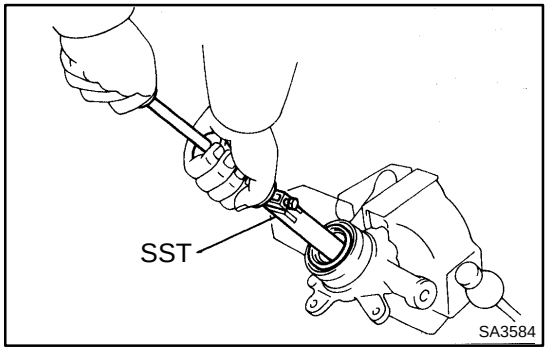

5. REMOVE OIL SEAL

Using SST, remove the oil seal from the steering knuckle.

SST 09308-00010

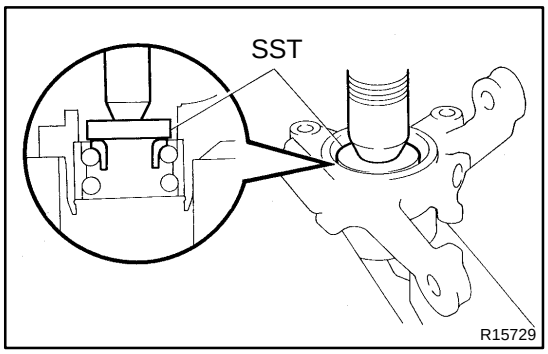

6. REMOVE BEARING FROM STEERING KNUCKLE

(a) Using snap ring pliers, remove the snap ring.

(b) Position the inner race above the bearing on the inner side.

(c) Using SST and a press, remove the bearing from the steering knuckle.
SST 09950-60010 (09951-00560)

SA0OW-02

REASSEMBLY

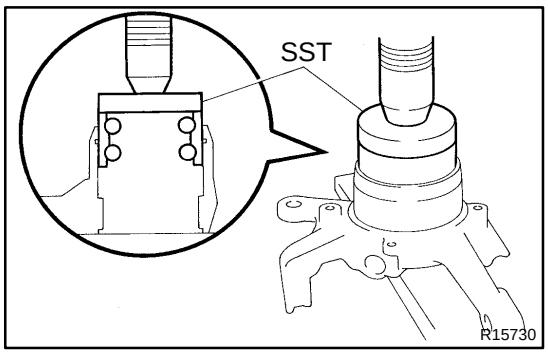

1. INSTALL BEARING TO STEERING KNUCKLE

(a) Using SST and a press, install a new bearing.
SST 09950-60020 (09951-00720)

NOTICE:

If the inner race and balls come loose from the bearing outer race, be sure to install them on the same side as before.

(b) Using snap ring pliers, install the snap ring.

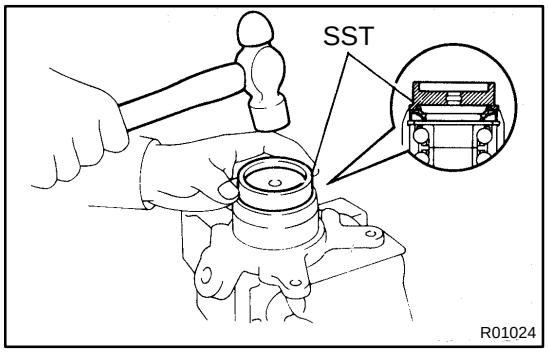

2. INSTALL OIL SEAL

(a) Install the inner race (outside).

(b) Using SST and a hammer, install a new oil seal until it becomes flush with the end surface of the steering knuckle.
SST 09608-32010

(c) Coat MP grease to the oil seal lip.

3. INSTALL AXLE HUB TO STEERING KNUCKLE

(a) Install the brake dust cover to the steering knuckle with the 4 bolts.
Torque: 8.0 N·m (85 kgf·cm, 74 in.·lbf)

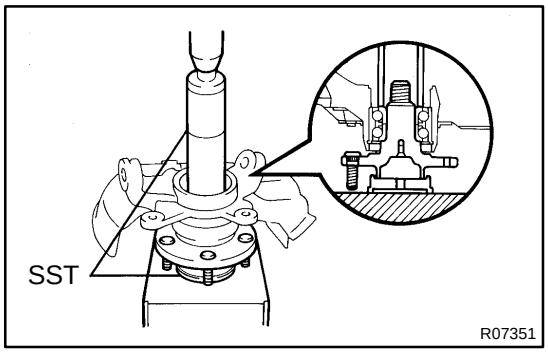

(b) Using SST and a press, install the axle hub to steering knuckle.
SST 09608-32010, 09608-06041

4. INSTALL ABS SPEED SENSOR ROTOR ON AXLE SHAFT

NOTICE:

Do not scratch the serrations of the sensor rotor.

5. INSTALL AXLE HUB LOCK NUT

(a) Install and torque a new axle hub lock nut.
Torque: 199 N·m (2,030 kgf·cm, 147 ft·lbf)

(b) Using a chisel and hammer, stake the lock nut.

6. INSTALL HUB GREASE CAP

Using a screwdriver and hammer, install the grease cap to the steering knuckle.

FRONT WHEEL HUB BOLT

SA0OY-01

REPLACEMENT

1. REMOVE FRONT WHEEL

2. REMOVE BRAKE CALIPER AND DISC

(a) Remove the 2 bolts and brake caliper from the steering knuckle.

(b) Support the brake caliper securely.

(c) Place matchmarks on the disc and axle hub.

(d) Remove the disc.

3. REMOVE HUB BOLT

Using SST, remove the hub bolt.

SST 09628-1001 1

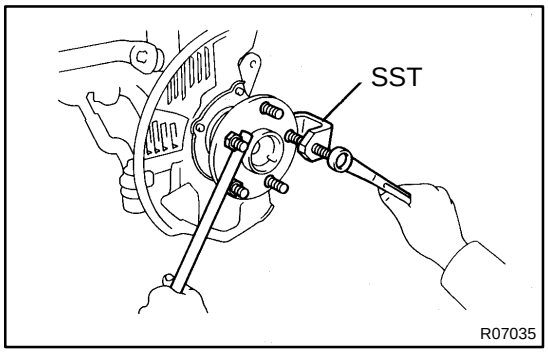

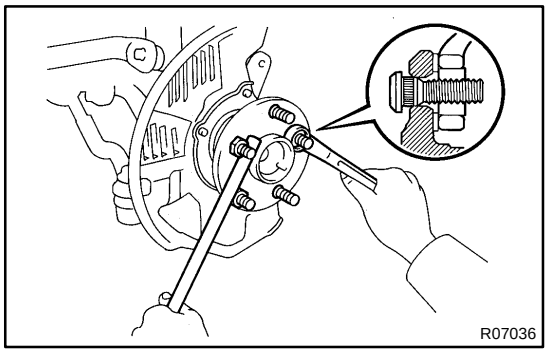

4. INSTALL HUB BOLT

(a) Install washer and nut to a new hub bolt, as shown in the illustration.

(b) Turn the wheel nut to pull the hub bolt through until the underside of the hub bolt head touches the axle hub.

5. INSTALL DISC AND BRAKE CALIPER

(a) Install the disc.

(b) Install the 2 bolts and brake caliper to the steering knuckle.

Torque: 118 N·m (1,200 kgf·cm, 87 ft·lbf)

6. INSTALL FRONT WHEEL

Torque: 103 N·m (1,050 kgf·cm, 76 ft·lbf)

FRONT SHOCK ABSORBER

SA0OZ-02

COMPONENTS

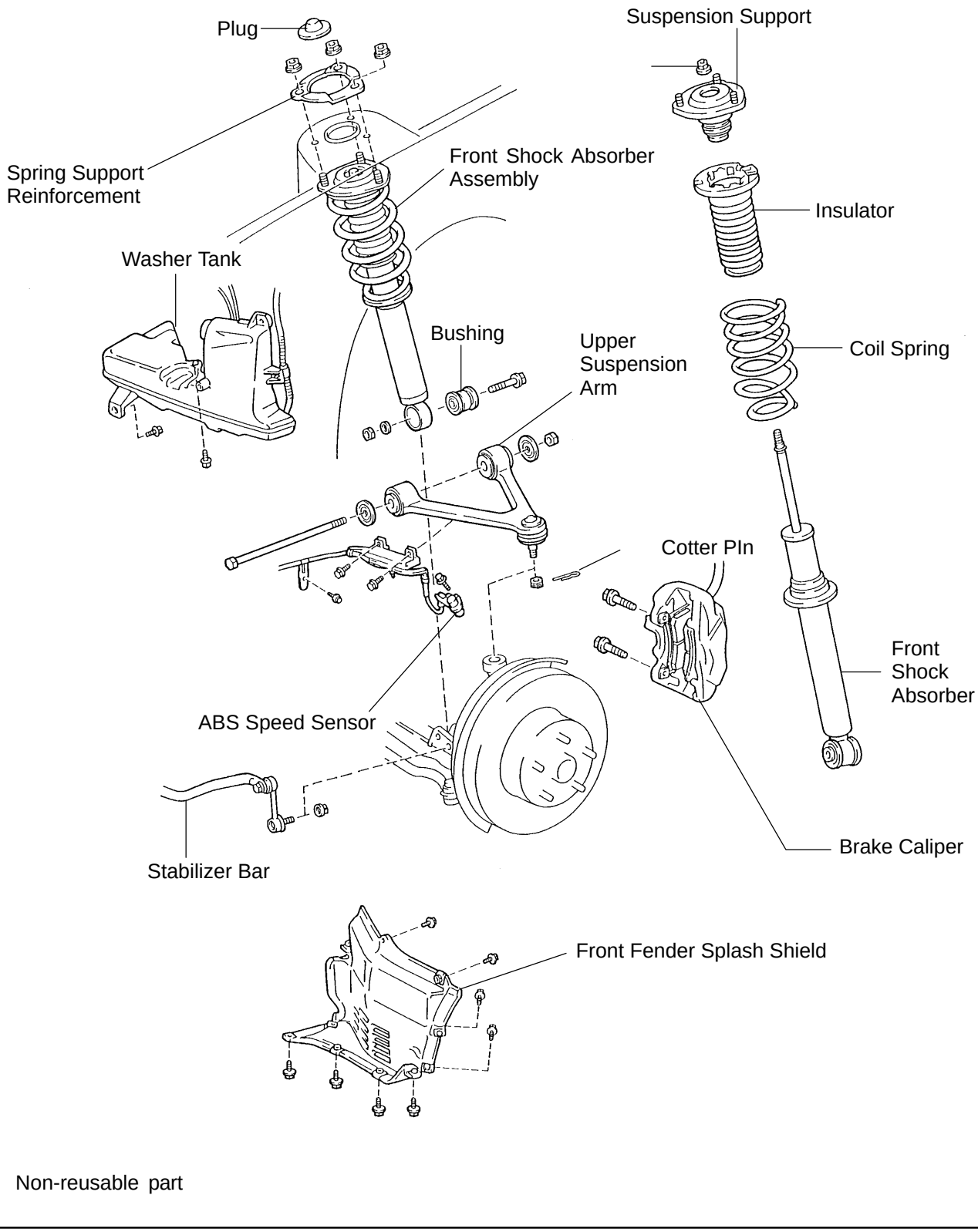

Non-reusable part

N

F08323

SA0P0-01

REMOVAL

1. REMOVE FRONT WHEEL

Torque: 103 N·m (1,050 kgf·cm, 76 ft·lbf)

2. REMOVE BRAKE CALIPER

(a) Remove the 2 bolts and brake caliper from the steering knuckle.

Torque: 118 N·m (1,200 kgf·cm, 87 ft·lbf)

(b) Support the brake caliper securely.

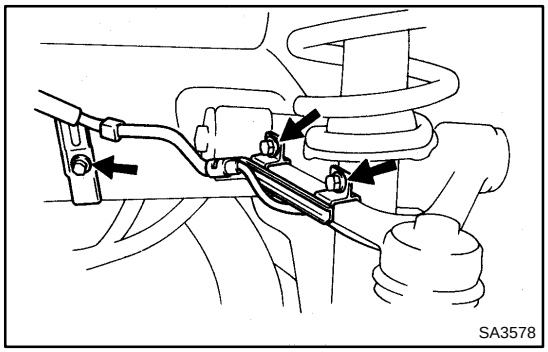
SA3578

3. DISCONNECT ABS SPEED SENSOR AND WIRE HARNESS

(a) Remove the bolt and disconnect the speed sensor from the steering knuckle.

Torque: 7.8 N·m (80 kgf·cm, 69 in.·lbf)

(b) Remove the 3 bolts and disconnect the wire harness clamp to prevent the wire harness from being damaged when removing or installing the through bolt of the upper suspension arm.

Torque: 5.4 N·m (55 kgf·cm, 48 in.·lbf)

4. REMOVE FRONT FENDER SPLASH SHIELD

5. LH side only:

MOVE WASHER TANK

(a) Remove the 2 washer tank set bolts.

(b) Move the washer tank away from the body.

6. DISCONNECT UPPER SUSPENSION ARM

(a) Remove the bolt and nut and disconnect the upper suspension arm from the sub-frame.

Torque: 164 N·m (1,670 kgf·cm, 121 ft·lbf)

HINT:

At the time of installation, after stabilizing the suspension, torque the nut.

(b) Support the upper suspension arm securely.

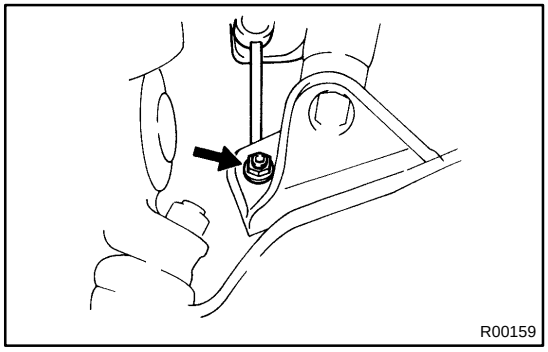
R00159

7. DISCONNECT STABILIZER BAR LINK

Remove the nut and disconnect the stabilizer bar link.

Torque: 74 N·m (750 kgf·cm, 54 ft·lbf)

HINT:

If the ball joint stud turns together with the nut, use a hexagon wrench to hold the stud.

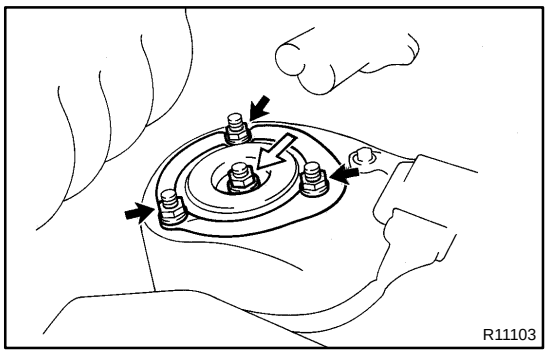

8. REMOVE SHOCK ABSORBER

(a) Remove the nut, washer and bolt and disconnect the shock absorber from the lower suspension arm.

Torque: 143 N·m (1,460 kgf·cm, 106 ft·lbf)

HINT:

At the time of installation, after stabilizing the suspension torque the nut.

(b) Remove the plug from the suspension support.

(c) Loosen the lock nut in the middle of the suspension support.

NOTICE:

Do not remove the nut.

Torque: 29 N·m (300 kgf·cm, 22 ft·lbf)

(d) Remove the 3 nuts, spring support reinforcement and shock absorber from the body.

Torque: 35 N·m (360 kgf·cm, 26 ft·lbf)

SA0P1-01

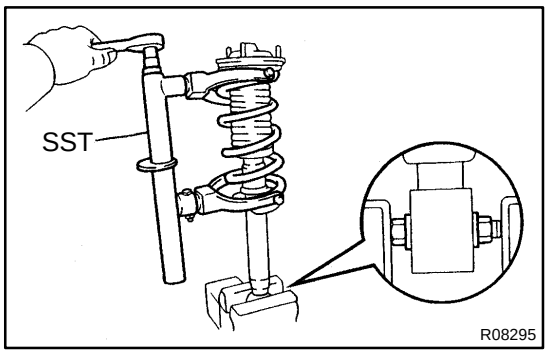

DISASSEMBLY

1. REMOVE SUSPENSION SUPPORT AND COIL SPRING

(a) Using SST, compress the coil spring.
SST 09727-30021

NOTICE:

Do not use an impact wrench. It will damage the SST.

(b) Install the nut and bolt to the lower part of the shock absorber and secure it in a vise.

(c) Remove the suspension support center nut.

(d) Remove the suspension support and coil spring.

2. REMOVE INSULATOR FROM SUSPENSION SUPPORT

SA0P2-01

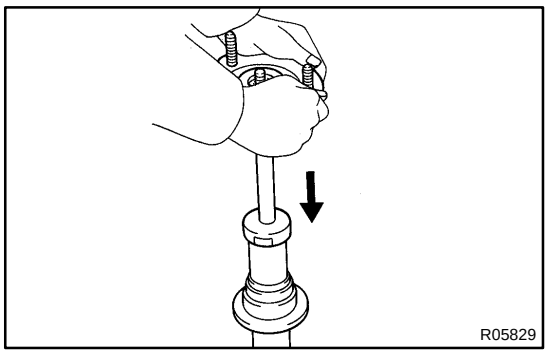

INSPECTION

INSPECT SHOCK ABSORBER

Compress and extend the shock absorber rod and check that there is no abnormal resistance or unusual operation sound.

If there is any abnormality, replace the shock absorber with a new one.

NOTICE:

When discarding the shock absorber, see DISPOSAL on page SA-24 .

SA0P3-01

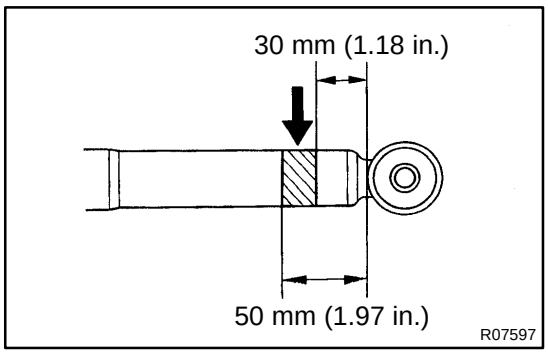

DISPOSAL

1. FULLY EXTEND SHOCK ABSORBER ROD

2. DRILL HOLE TO REMOVE GAS FROM CYLINDER

Using a drill, make a hole in the cylinder within the shaded region to remove the gas inside.

CAUTION:

The discharged gas is harmless, but be careful of chips which may fly up when drilling.

SA0P4-01

REPLACEMENT

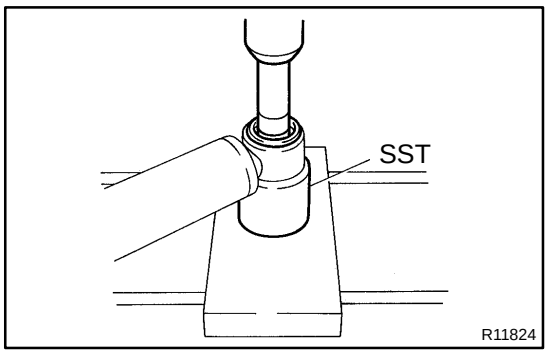

1. REMOVE BUSHING

Using SST and a deep socket wrench, remove the bushing.

SST 09710-14013 (09710-00021)

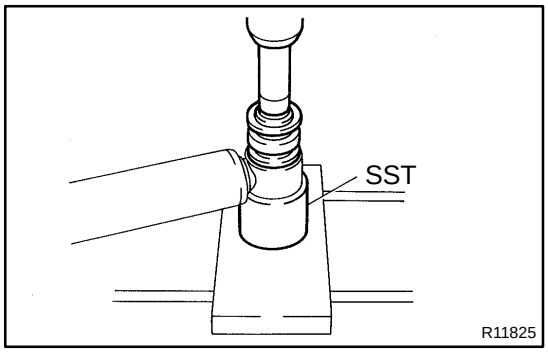

2. INSTALL NEW BUSHING

Using SST and a deep socket wrench, install a new bushing.

SST 09710-14013 (09710-00021)

NOTICE:

Do not apply grease or oil to the bushing.

SA0P5-01

REASSEMBLY

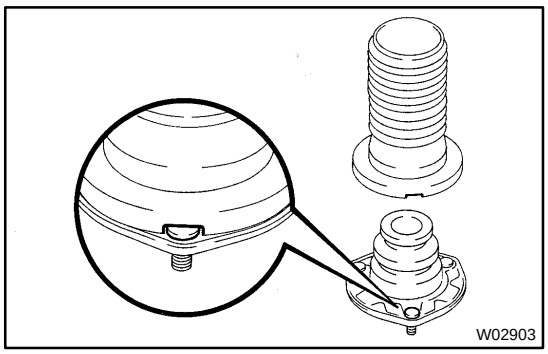

1. INSTALL INSULATOR TO SUSPENSION SUPPORT

HINT:

Match the bolt of the suspension support with the cut-out part of the insulator.

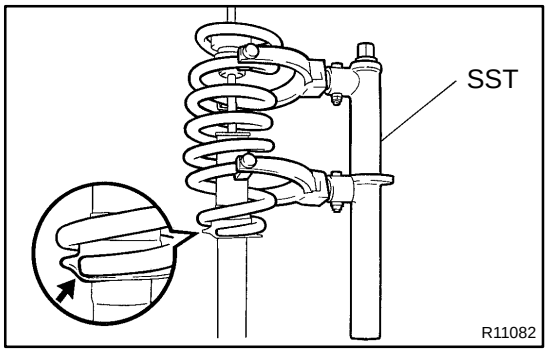

2. INSTALL COIL SPRING TO SHOCK ABSORBER

(a) Using SST, compress the coil spring.
SST 09727-30021

NOTICE:

Do not use an impact wrench. It will damage the SST.

(b) Install the coil spring to the shock absorber.

HINT:

Fit the lower end of the coil spring into the gap of the spring seat of the shock absorber.

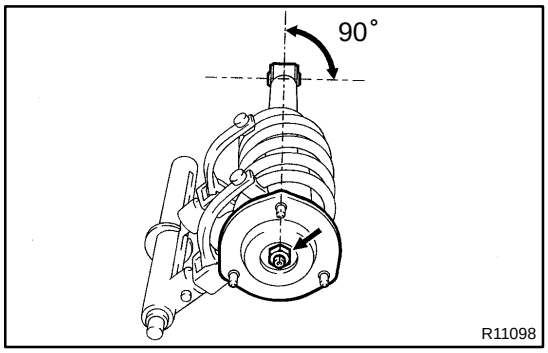

3. INSTALL SUSPENSION SUPPORT

(a) Install the suspension support to the rod.
(b) Temporarily tighten a new nut.
(c) Turn the suspension support so that one of the bolts on the suspension support faces the same direction, as shown in the illustration.

HINT:

Align the bolt so that a line drawn between the rod and the bolt would be 90° to the direction of the lower bushing.

(d) Remove the SST.
SST 09727-30021

HINT:

After removing the SST, again check the direction of the suspension support.

FRONT UPPER SUSPENSION ARM

SA0P7-02

COMPONENTS

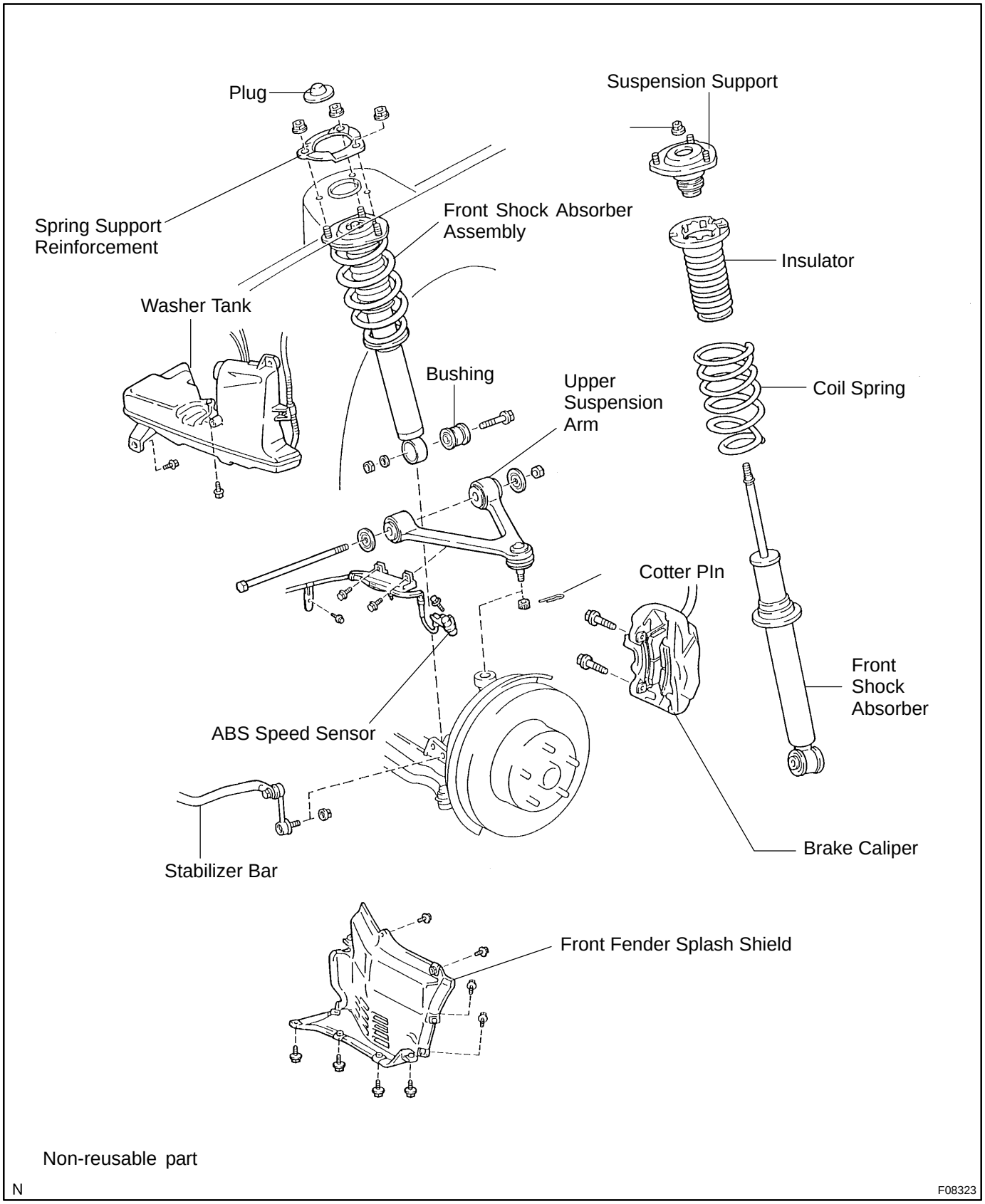

SA0P8-01

REMOVAL

1. REMOVE FRONT WHEEL

Torque: 103 N·m (1,050 kgf·cm, 76 ft·lbf)

2. REMOVE BRAKE CALIPER

(a) Remove the 2 bolts and brake caliper from the steering knuckle.

Torque: 118 N·m (1,200 kgf·cm, 87 ft·lbf)

(b) Support the brake caliper securely.

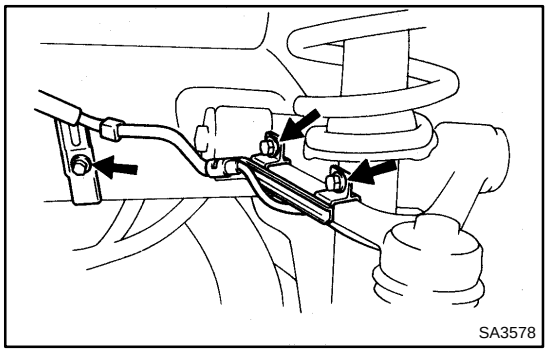
SA3578

3. DISCONNECT ABS SPEED SENSOR AND WIRE HARNESS CLAMP

(a) Remove the bolt and disconnect the speed sensor from the steering knuckle.

Torque: 7.8 N·m (80 kgf·cm, 69 in.·lbf)

(b) Remove the 3 bolts and disconnect the wire harness clamp to prevent the wire harness being damaged when removing or installing the through bolt.

Torque: 5.4 N·m (55 kgf·cm, 48 in.·lbf)

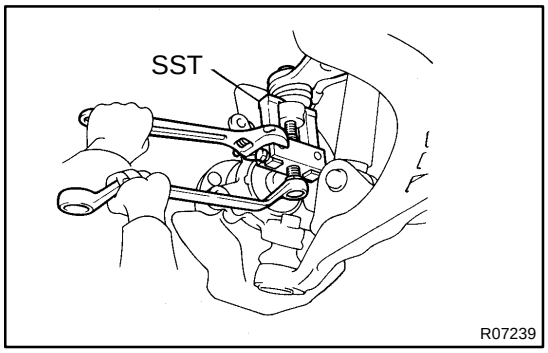

R07239

4. DISCONNECT UPPER SUSPENSION ARM

(a) Remove the cotter pin and the nut.

Torque: 103 N·m (1,050 kgf·cm, 76 ft·lbf)

(b) Using SST, disconnect the upper suspension arm from the steering knuckle.

SST 09628-6201 1

5. REMOVE FRONT FENDER SPLASH SHIELD

6. LH side only:

MOVE WASHER TANK

(a) Remove the 2 washer tank set bolts.

(b) Move the washer tank away from the body.

7. REMOVE UPPER SUSPENSION ARM

(a) Remove the nut, 2 washers and bolt.

Torque: 164 N·m (1,670 kgf·cm, 121 ft·lbf)

HINT:

At the time of installation, after stabilizing the suspension, torque the nut.

(b) Remove the upper suspension arm.

SA0P9-01

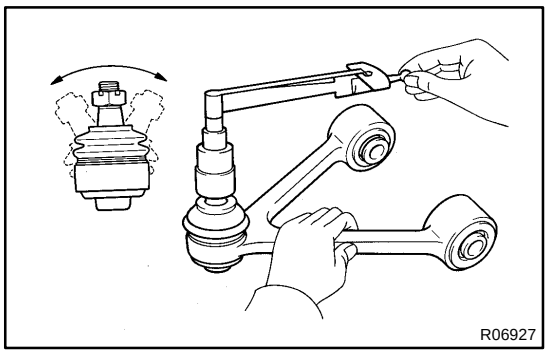

INSPECTION

INSPECT UPPER BALL JOINT FOR ROTATION CONDITION

(a) As shown in the illustration, flip the ball joint stud back and forth 5 times before installing the nut.

(b) Using a torque wrench, turn the nut continuously taking 2 - 4 seconds per a turn and take the torque reading on the 5th turn.

Torque (turning):

1.0 - 3.4 N·m (10 - 35 kgf·cm, 9 - 30 in.·lbf)

FRONT LOWER SUSPENSION ARM

SA0PC-02

COMPONENTS

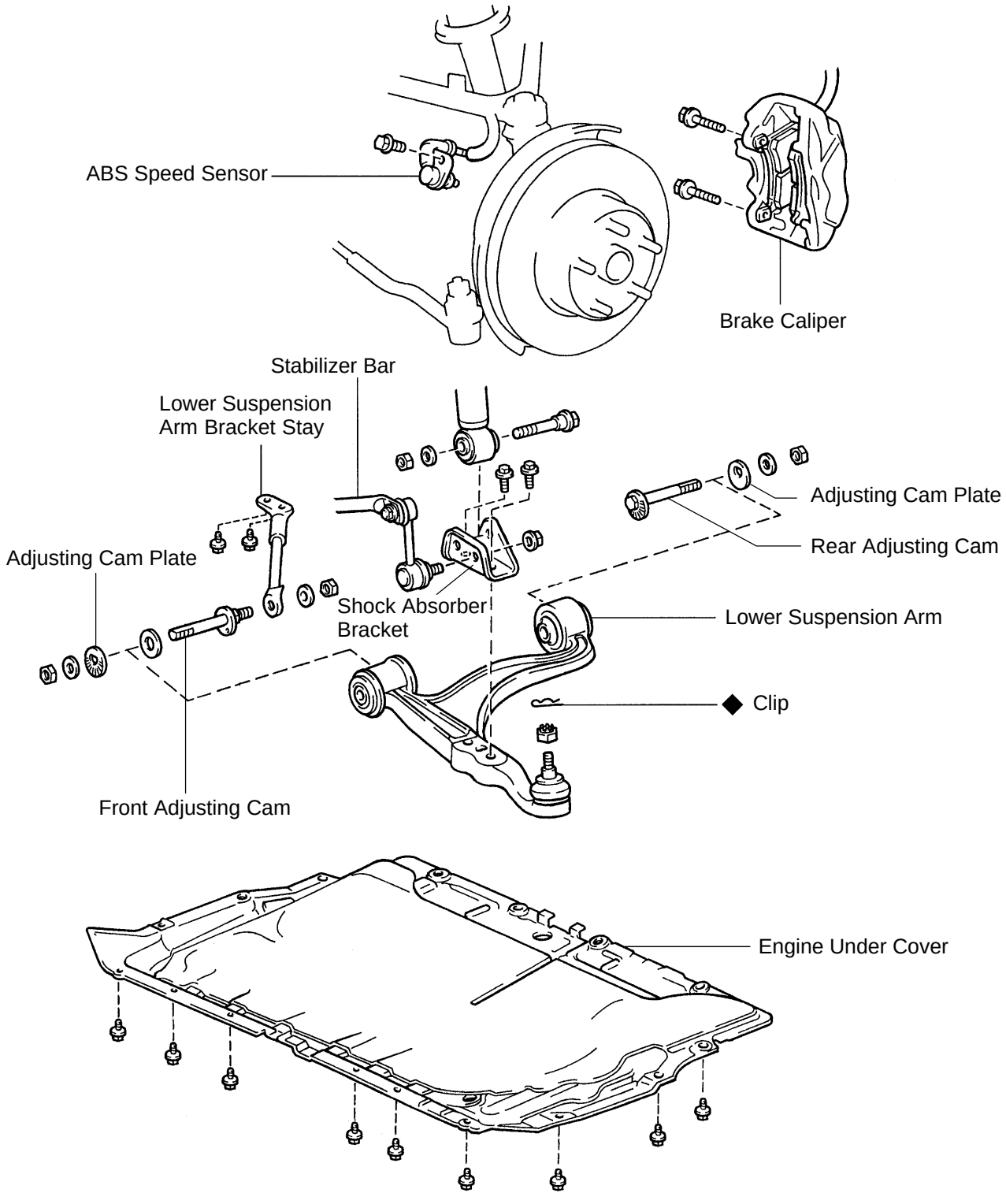

◆ Non-reusable part

W02908

SA0PD-01

REMOVAL

1. REMOVE FRONT WHEEL

Torque: 103 N·m (1,050 kgf·cm, 76 ft·lbf)

2. REMOVE ENGINE UNDER COVER

3. REMOVE BRAKE CALIPER

(a) Remove the 2 bolts and brake caliper from the steering knuckle.

Torque: 118 N·m (1,200 kgf·cm, 87 ft·lbf)

(b) Support the brake caliper securely.

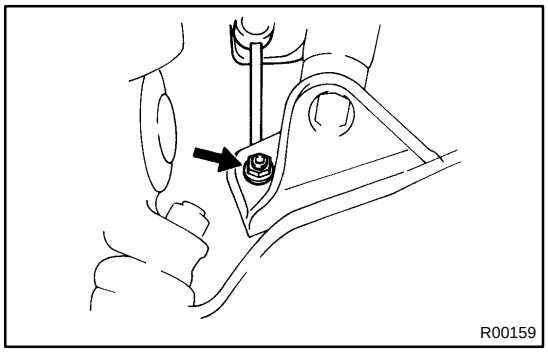

4. DISCONNECT STABILIZER BAR LINK FROM SHOCK ABSORBER BRACKET

Remove the nut and disconnect the stabilizer bar link from the shock absorber bracket.

Torque: 74 N·m (750 kgf·cm, 54 ft·lbf)

HINT:

If the ball joint stud turns together with the nut, use a hexagon wrench to hold the stud.

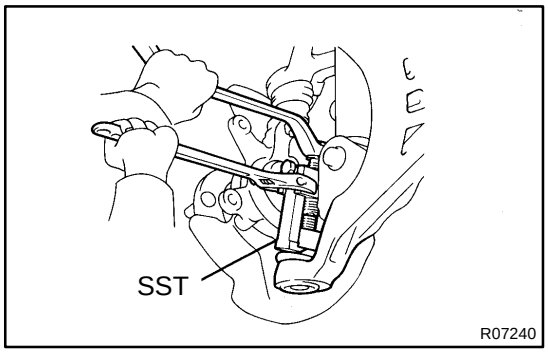

5. DISCONNECT STEERING KNUCKLE

(a) Remove the clip and nut.

Torque: 125 N·m (1,270 kgf·cm, 92 ft·lbf)

(b) Using SST, disconnect the steering knuckle from the lower suspension arm.

SST 09628-6201 1

6. REMOVE LOWER SUSPENSION ARM

(a) Remove the nut, washer and bolt and disconnect the lower suspension arm from the shock absorber.

Torque: 143 N·m (1,460 kgf·cm, 106 ft·lbf)

HINT:

At the time of installation, after stabilizing the suspension, torque the nut.

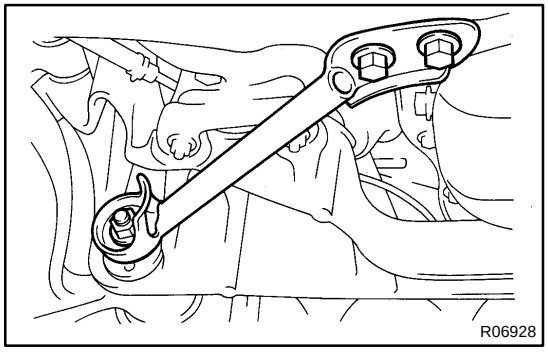

(b) Remove the nut, 2 bolts and the lower suspension arm bracket stay.

Bolt: 44 N·m (450 kgf·cm, 32 ft·lbf)

Nut: 59 N·m (600 kgf·cm, 43 ft·lbf)

HINT:

At the time of installation, before installing the lower suspension arm bracket stay, adjust the front wheel alignment.

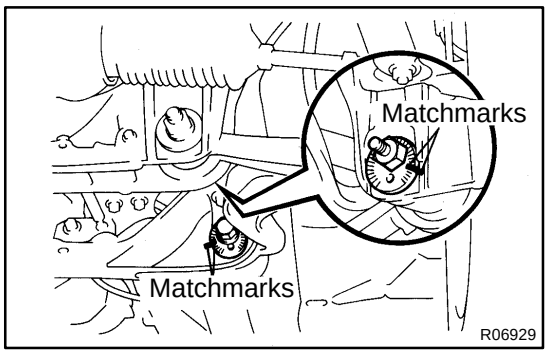

(c) Before loosening the adjusting cam, place matchmarks on the front and rear adjusting cams and sub-frame.

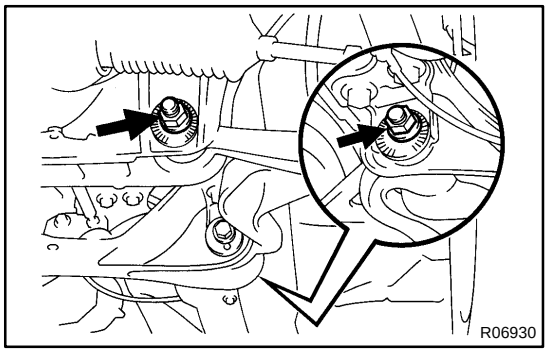

(d) Remove the 2 nuts, washers, adjusting cam plates and adjusting cams and lower suspension arm.
Torque: 226 N·m (2,300 kgf·cm, 166 ft·lbf)

HINT:

At the time of installation, after stabilizing the suspension, torque the nuts.

7. REMOVE SHOCK ABSORBER BRACKET FROM LOWER SUSPENSION ARM

Remove the 2 bolts and bracket from the lower suspension arm.
Torque: 52 N·m (530 kgf·cm, 38 ft·lbf)

SA0PE-02

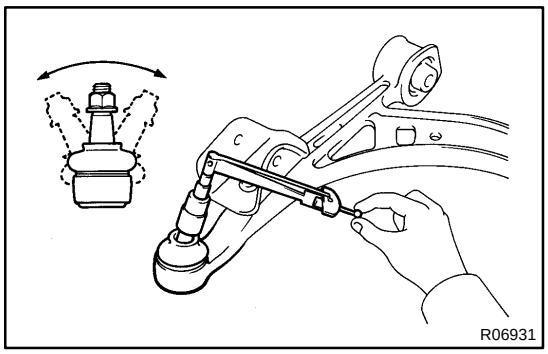

INSPECTION

INSPECT LOWER BALL JOINT FOR ROTATION CONDITION

(a) As shown in the illustration, flip the ball joint stud back and forth 5 times before installing the nut.

(b) Using torque wrench, turn the nut continuously taking 2 - 4 seconds per a turn and take the torque reading on the 5th turn.

Torque (turning):
1.0 - 3.4 N·m (10 - 35 kgf·cm, 9 - 30 in.·lbf)

FRONT STABILIZER BAR

SA0PG-02

COMPONENTS

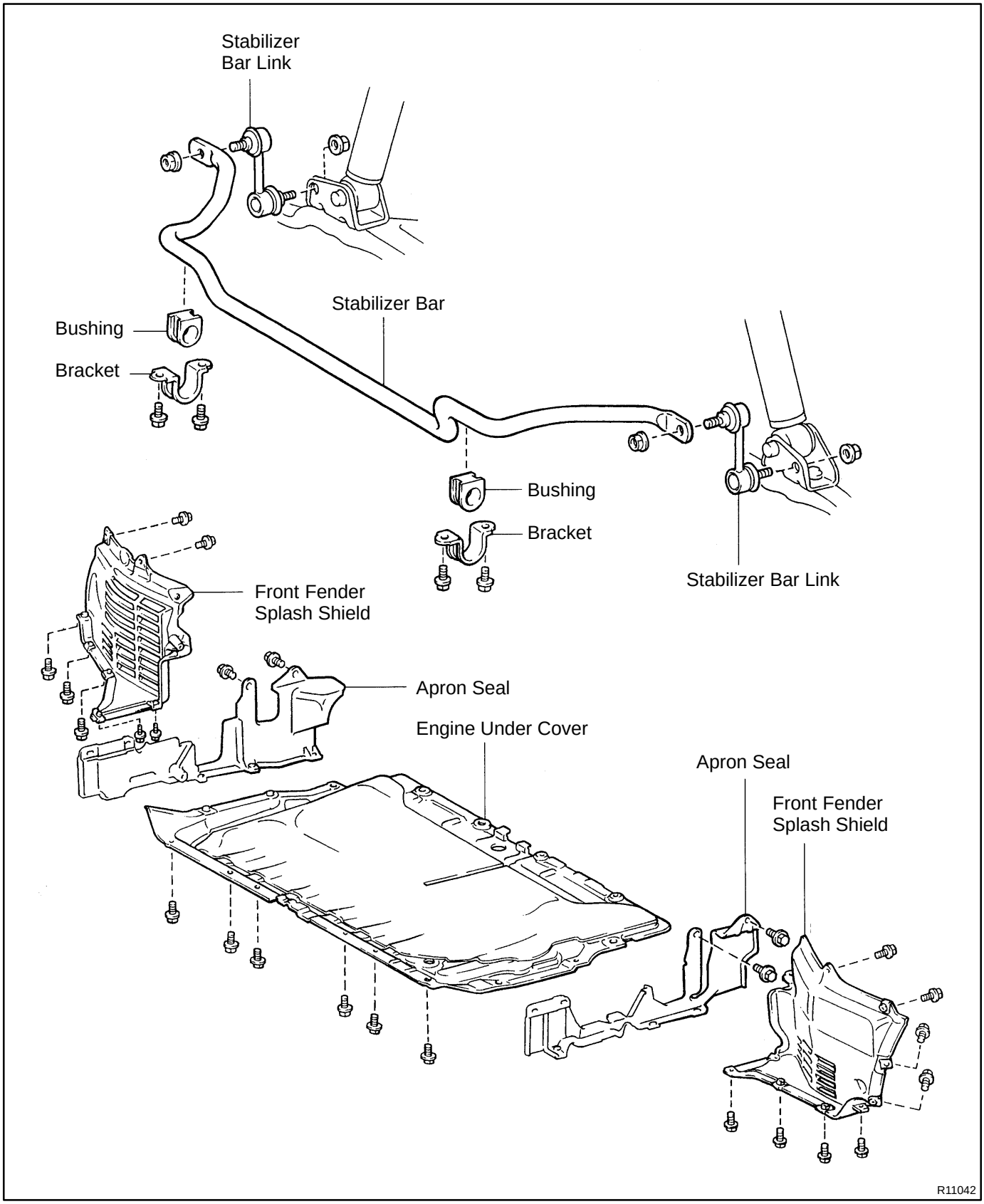

SA0PH-01

REMOVAL

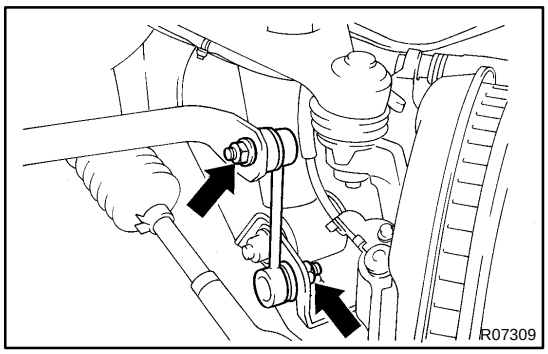

1. REMOVE FRONT WHEELS
Torque: 103 N·m (1,050 kgf·cm, 76 ft·lbf)

2. REMOVE ENGINE UNDER COVER

3. REMOVE LEFT AND RIGHT FRONT FENDER SPLASH SHIELDS

4. REMOVE BOTH STABILIZER BAR LINKS

(a) Remove the 2 nuts and stabilizer bar link from the stabilizer bar and the lower suspension arm.
Torque: 74 N·m (750 kgf·cm, 54 ft·lbf)

HINT:
If the ball joint stud turns together with the nut, use a hexagon wrench to hold the stud.

(b) Employ the same manner described above to the other side.

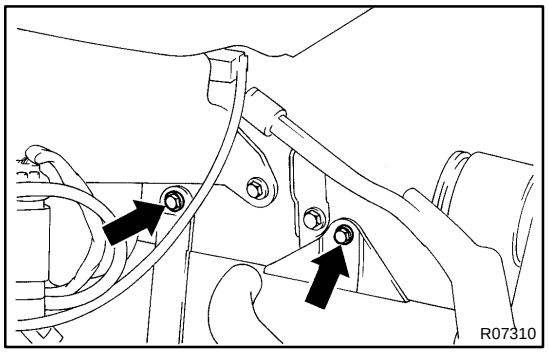

5. REMOVE STABILIZER BAR

(a) Remove the left and right apron seal set bolts.

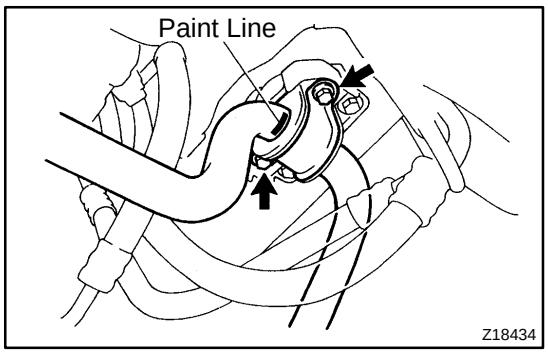

(b) Remove the 4 bracket bolts and the stabilizer bar with the 2 bushings and brackets.
Torque: 18 N·m (180 kgf·cm, 13 ft·lbf)

6. REMOVE CUSHIONS AND BRACKETS

HINT:
At the time of installation, install the cushion to the outside of the paint line.

SA0PI-01

INSPECTION

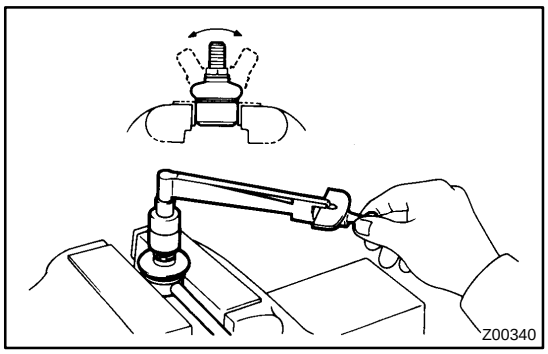

INSPECT STABILIZER BAR LINK BALL JOINT FOR ROTATION CONDITION

(a) As shown in the illustration, flip the ball joint stud back and forth 5 times before installing the nut.

(b) Using a torque wrench, turn the nut continuously taking 2 - 4 seconds per a turn and take the torque reading on the 5th turn.

Torque (turning):
0.05 - 1.0 N·m (0.5 - 10 kgf·cm, 0.4 - 8.7 in.·lbf)

REAR AXLE HUB

COMPONENTS

SA0PK-02

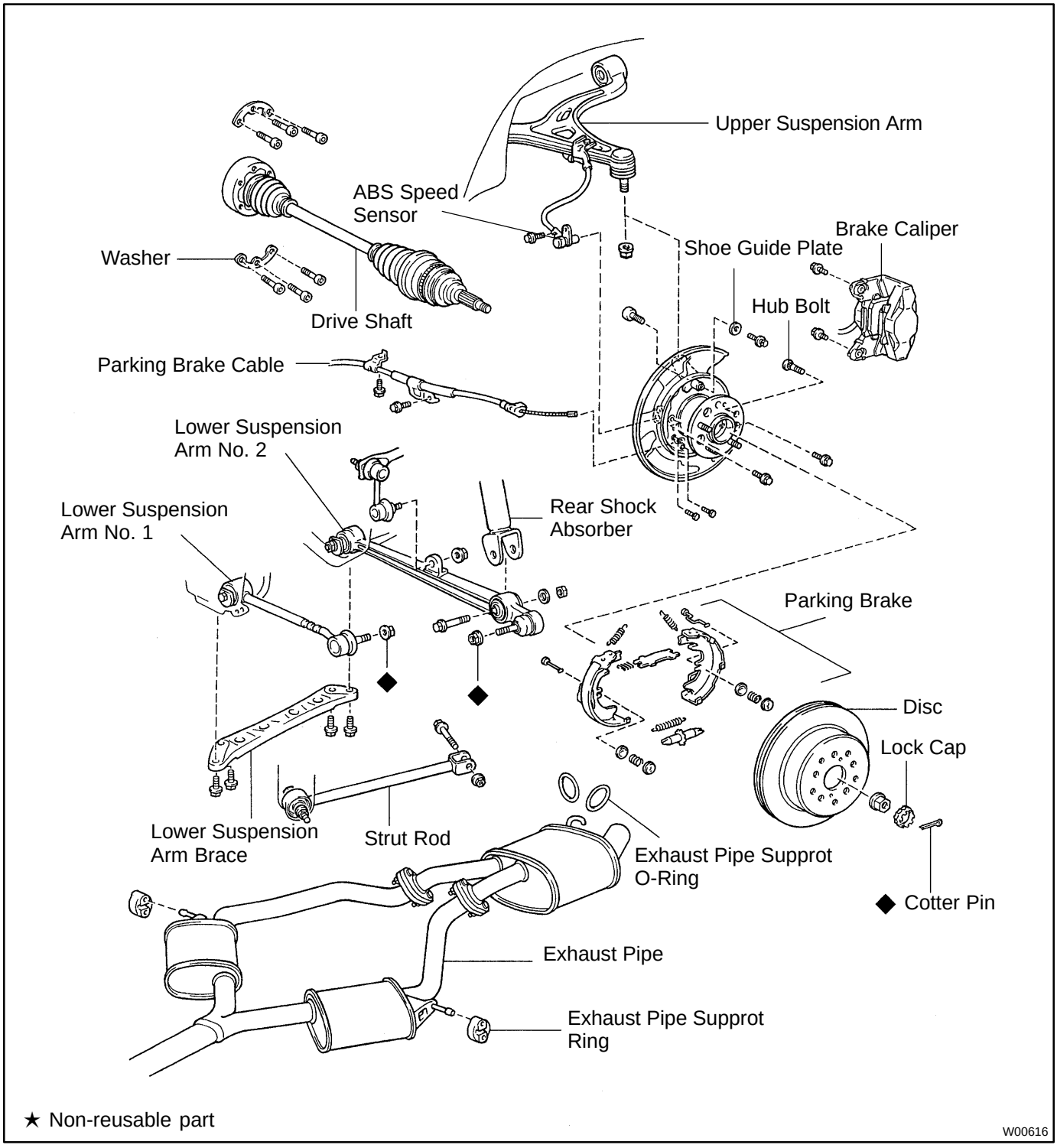

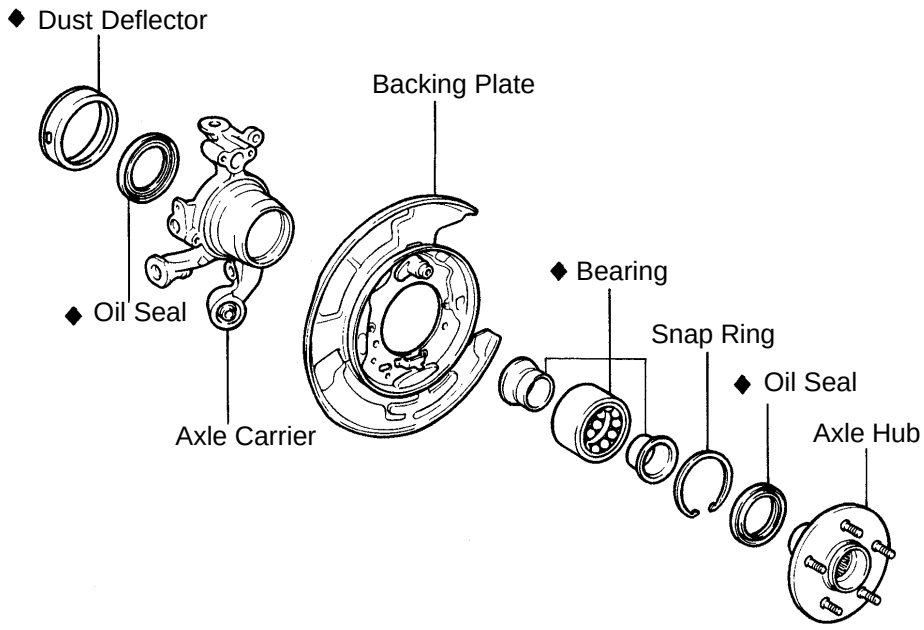

◆ Non-reusable part

R05923

SA0PL-02

REMOVAL

1. REMOVE REAR WHEEL

Torque: 103 N·m (1,050 kgf·cm, 76 ft·lbf)

2. REMOVE BRAKE CALIPER AND DISC

(a) Remove the 2 bolts and brake caliper from the rear axle hub.

Torque: 104 N·m (1,065 kgf·cm, 77 ft·lbf)

(b) Support the brake caliper securely.

(c) Place matchmarks on the disc and axle hub.

(d) Remove the disc.

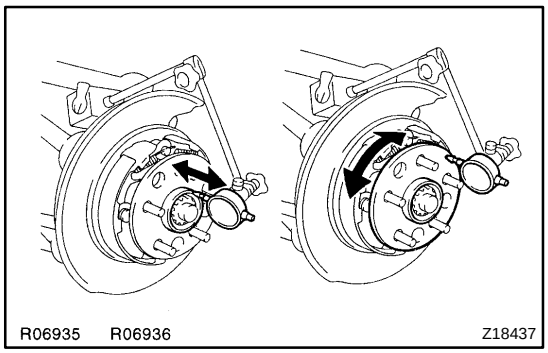

3. CHECK BEARING BACKLASH AND AXLE HUB DEVIATION

(a) Using a dial indicator near the center of the axle hub and check the backlash in the bearing shaft direction.

Maximum: 0.05 mm (0.0020 in.)

If the backlash exceeds the maximum, replace the bearing.

(b) Using a dial indicator, check the deviation at the surface of the axle hub outside the hub bolt.

Maximum: 0.05 mm (0.0020 in.)

If the deviation exceeds the maximum, replace the axle hub.

4. REMOVE DRIVE SHAFT LOCK NUT

(a) Install the disc and brake caliper.

Torque: 104 N·m (1,065 kgf·cm, 77 ft·lbf)

(b) Remove the cotter pin and lock cap.

(c) With applying the brakes, remove the nut.

Torque: 289 N·m (2,950 kgf·cm, 213 ft·lbf)

(d) Remove the brake caliper and disc.

5. REMOVE DRIVE SHAFT (See page SA-51)

6. REMOVE PARKING BRAKE SHOE

(See page BR-60)

7. DISCONNECT ABS SPEED SENSOR

Remove the bolt and disconnect the ABS speed sensor.

Torque: 7.8 N·m (80 kgf·cm, 69 in.·lbf)

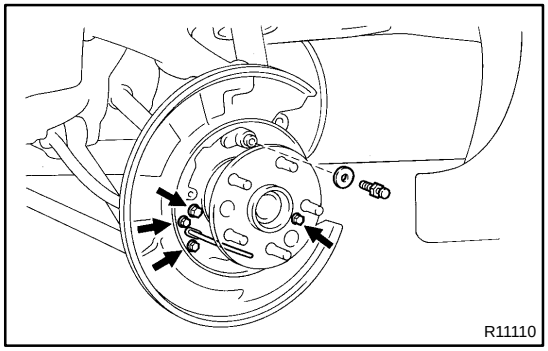

8. DISCONNECT PARKING BRAKE CABLE

(a) Remove the 2 parking brake cable set bolts.

Torque: 8.0 N·m (80 kgf·cm, 69 in.·lbf)

(b) Remove the 2 backing plate set bolts.

Torque: 26 N·m (260 kgf·cm, 19 ft·lbf)

(c) Remove the bolt and shoe guide plate.

Torque: 18 N·m (185 kgf·cm, 13 ft·lbf)

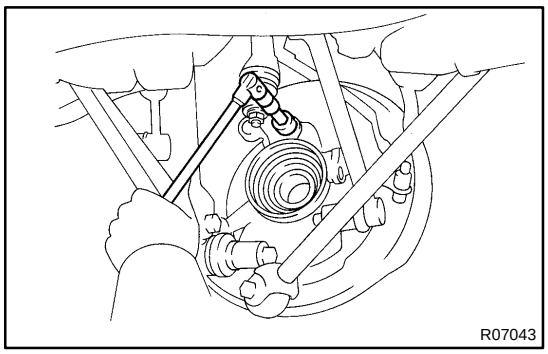

(d) Using a 14 mm hexagon wrench, remove the hexagon bolt.
Torque: 180 N·m (1,825 kgf·cm, 132 ft·lbf)
(e) Slide the backing plate to the outside and disconnect the parking brake cable.

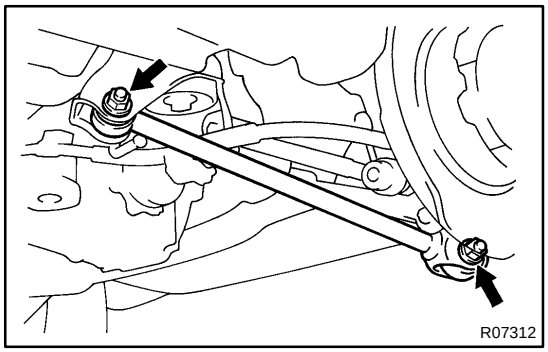

9. REMOVE STRUT ROD
Remove the 2 bolts and nuts.
Torque: 184 N·m (1,880 kgf·cm, 136 ft·lbf)
HINT:
At the time of installation, after stabilizing the suspension, torque the bolt.

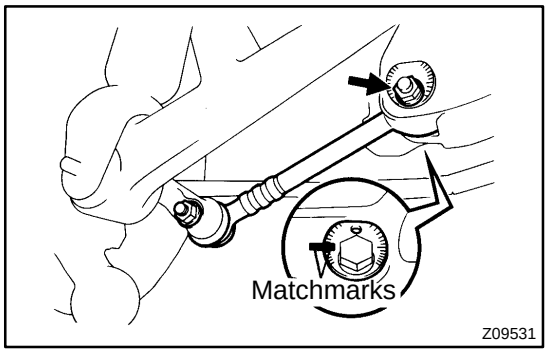

10. DISCONNECT LOWER SUSPENSION ARM NO.1
(a) Remove the 2 bolt and disconnect the parking brake cable clamps.
Torque: 19 N·m (190 kgf·cm, 14 ft·lbf)
(b) Place matchmarks on the adjusting cam and sub-frame.
(c) Remove the nut, washer, adjusting cam plate and adjusting cam and disconnect the lower suspension arm No.1.
Torque: 184 N·m (1,880 kgf·cm, 136 ft·lbf)
HINT:
At the time of installation, after stabilizing the suspension, torque the nut.

11. DISCONNECT LOWER SUSPENSION ARM NO.2
(a) Remove the nut, washer and bolt and disconnect the shock absorber from the lower suspension arm No.2.
Torque: 137 N·m (1,400 kgf·cm, 101 ft·lbf)
HINT:
At the time of installation, after stabilizing the suspension, torque the nut.
(b) Remove the nut and disconnect the stabilizer bar link from the lower suspension arm No.2.
Torque: 74 N·m (750 kgf·cm, 54 ft·lbf)

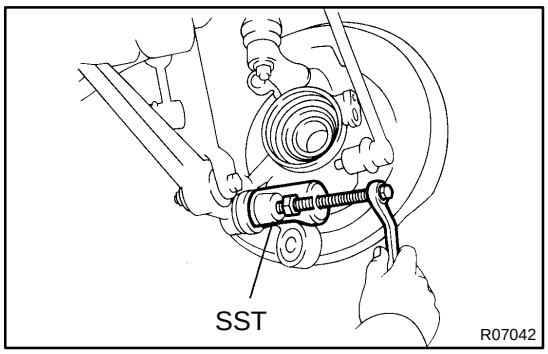

(c) Loosen the nut.
Torque: 150 N·m (1,525 kgf·cm, 110 ft·lbf)
(d) Using SST, disconnect the lower suspension arm No.2 from the axle carrier.
SST 09610-20012

NOTICE:
Be careful not to damage the ball joint bolt.
(e) Remove the nut.

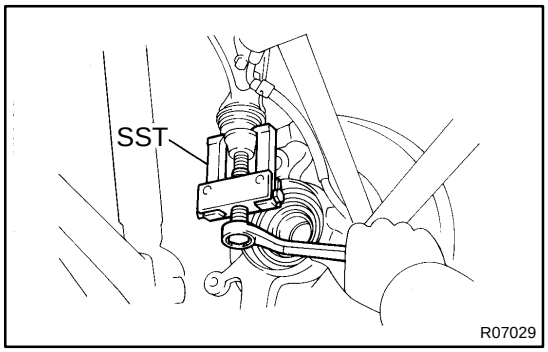

12. REMOVE REAR AXLE CARRIER
(a) Remove the nut.
Torque: 108 N·m (1,100 kgf·cm, 80 ft·lbf)
(b) Using SST, disconnect the upper suspension arm from the axle carrier.
SST 09628-6201 1

NOTICE:
Be careful not to damage the dust boot.
(c) Remove the rear axle carrier.

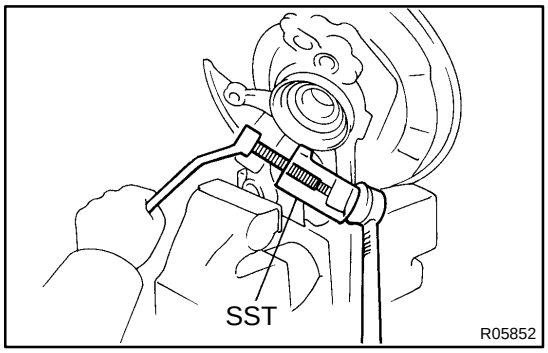

13. REMOVE REAR SUSPENSION ARM NO.1
(a) Remove the nut.
Torque: 59 N·m (600 kgf·cm, 43 ft·lbf)
(b) Using SST, disconnect the lower suspension arm No.1 from the axle carrier.
SST 09610-20012

NOTICE:
Be careful not to damage the dust boot.
HINT:
At the time of installation, before install the suspension arm No.1, install the axle carrier to the vehicle.

SA0PM-01

DISASSEMBLY

1. REMOVE DUST DEFLECTOR

Using a screwdriver, remove the dust deflector.

2. REMOVE AXLE HUB FROM AXLE CARRIER

(a) Mount the axle carrier in a vise.

HINT:

Use a set of soft jaws in the vise to protect the axle carrier.

NOTICE:

Do not tighten the vise too tight.

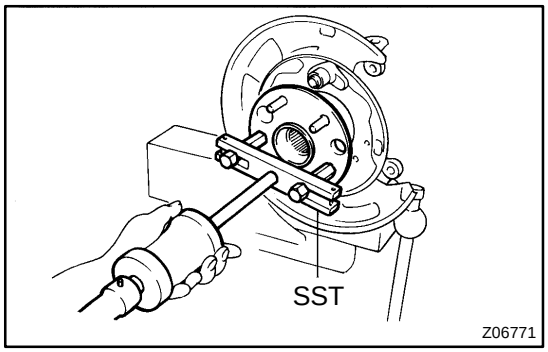

(b) Using SST, remove the axle hub.
SST 09520-00031

(c) Remove the backing plate.

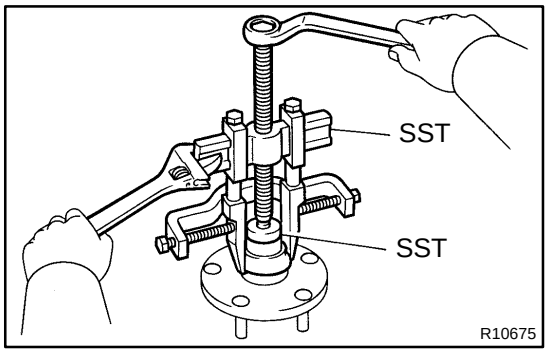

(d) Using SST, remove the outside inner race from the axle hub.
SST 09608-00081, 09950-40010 (09951-04010, 09952-04010, 09953-04020, 09954-04010, 09955-04010, 09957-04010, 09958-04010)

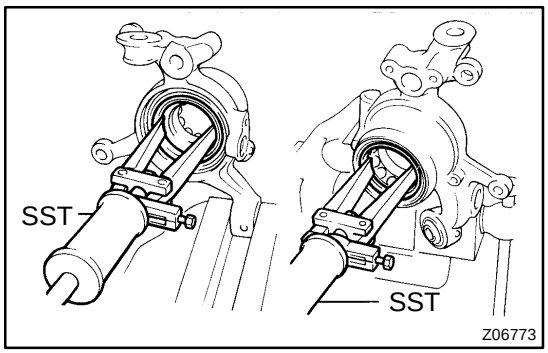

3. REMOVE OIL SEALS

Using SST, remove the inner and outer oil seals.
SST 09308-00010

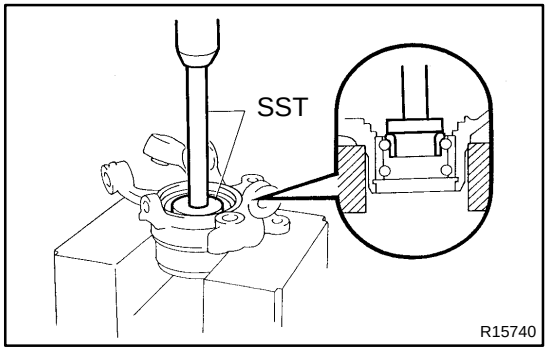

4. REMOVE BEARING

(a) Using snap ring pliers, remove the snap ring.

(b) Place the inner race (inside) to the bearing.

(c) Using SST and a press, remove the bearing.
SST 09950-60010 (09951-00640), 09950-70010 (09951-07150)

SA0PN-01

REASSEMBLY

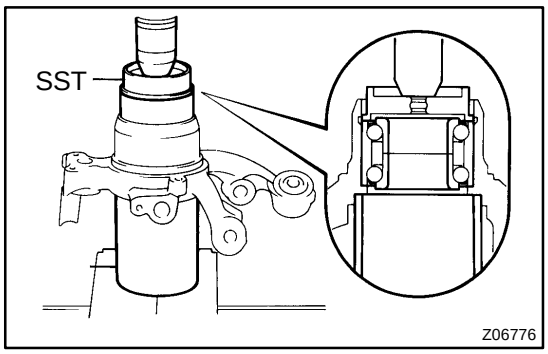

1. INSTALL NEW BEARING

(a) Using SST and a press, install a bearing to the axle carrier.
SST 09527-1701 1, 09608-32010

NOTICE:

If the inner races come loose from the bearing outer race, be sure to install them on the same side as before.

(b) Using snap ring pliers, install the snap ring.

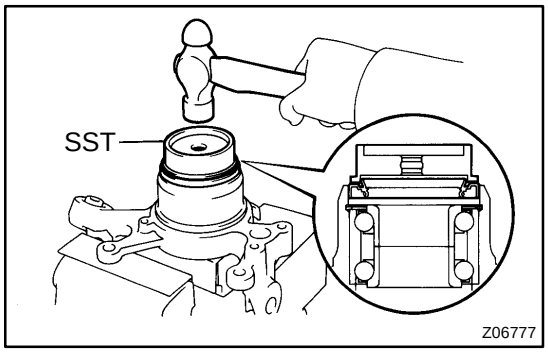

2. INSTALL OIL SEAL (Outer)

(a) Place the inner race (outside).

(b) Using SST and a hammer, tap in a new oil seal until it becomes flush with end surface of the carrier.
SST 09608-32010

NOTICE:

Be careful not to damage the oil seal.

(c) Coat MP grease to the oil seal lip.

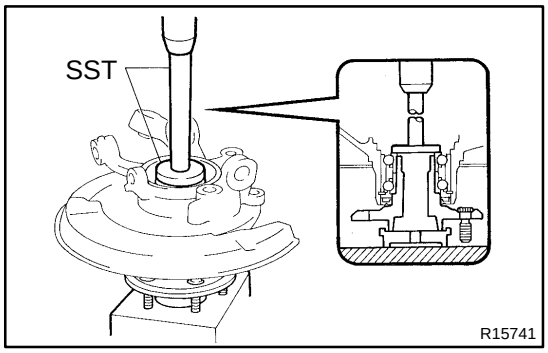

3. INSTALL AXLE HUB

(a) Temporarily install the backing plate with the hexagon bolt.

(b) Place the inner race (inside).

(c) Using SST and a press, install the axle hub.
SST 09608-32010, 09950-60010 (09951-00640), 09950-70010 (09951-07150)

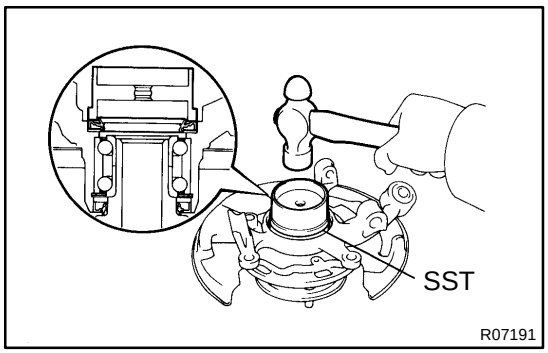

4. INSTALL OIL SEAL (Inner)

(a) Using SST and a hammer, install a new oil seal.
SST 09223-15020

NOTICE:

Be careful not to damage the oil seal.

(b) Coat MP grease to the oil seal lip.

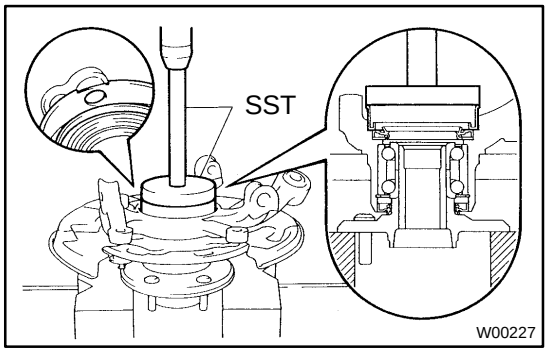

5. INSTALL DUST DEFLECTOR

Using SST and a press, install a new dust deflector.
SST 09950-60020 (09951-01030), 09950-70010 (09951-07150)

HINT:

Align the holes for the ABS speed sensor in the dust deflector and carrier.

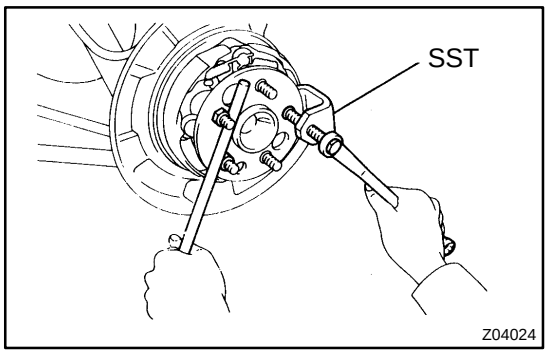

REAR WHEEL HUB BOLT

SA0PP-01

REPLACEMENT

1. REMOVE REAR WHEEL

2. REMOVE BRAKE CALIPER AND DISC

(a) Remove the 2 bolts and brake caliper from the rear axle hub.

(b) Support the brake caliper securely.

(c) Place matchmarks on the disc and axle hub.

(d) Remove the disc.

3. REMOVE HUB BOLT

Using SST, remove the hub bolt.

SST 09628-1001 1

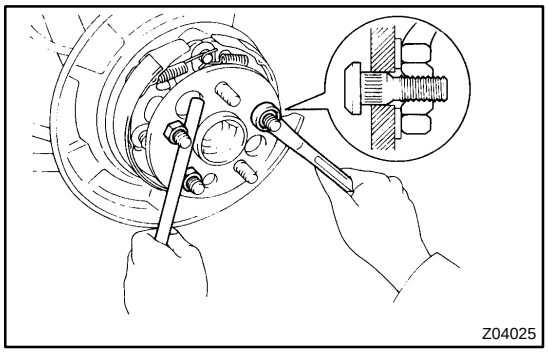

4. INSTALL HUB BOLT

(a) Install washer and nut to a new hub bolt, as shown in the illustration.

(b) Turn the wheel nut to pull the hub bolt through until the underside of the hub bolt head touches the axle hub.

5. INSTALL DISC AND BRAKE CALIPER

(a) Install the disc.

(b) Install the 2 bolts and brake caliper to the rear axle hub.

Torque: 104 N·m (1,065 kgf·cm, 77 ft·lbf)

6. INSTALL REAR WHEEL

Torque: 103 N·m (1,050 kgf·cm, 76 ft·lbf)

REAR DRIVE SHAFT

COMPONENTS

SA0PQ-02

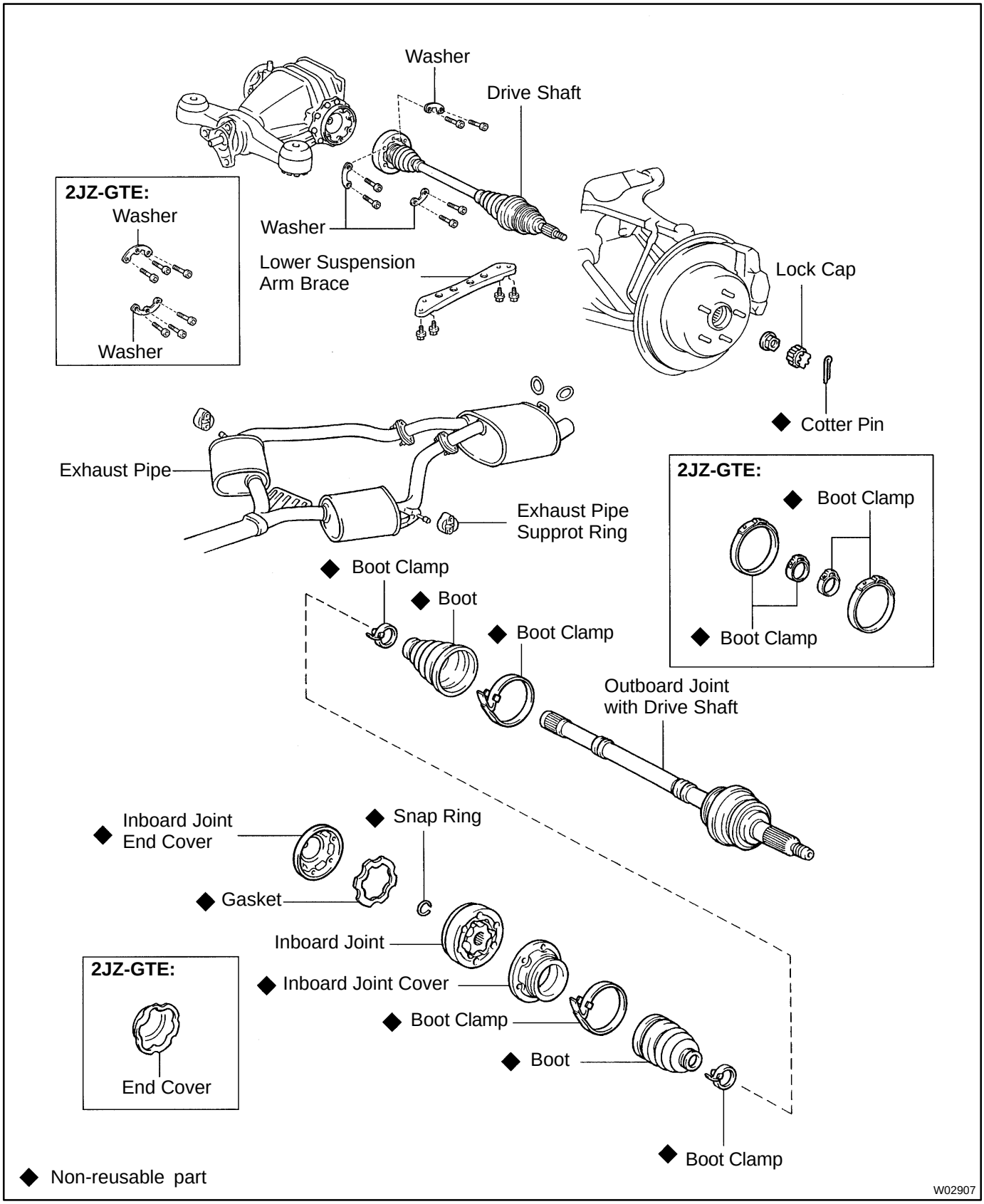

SA0PR-02

REMOVAL

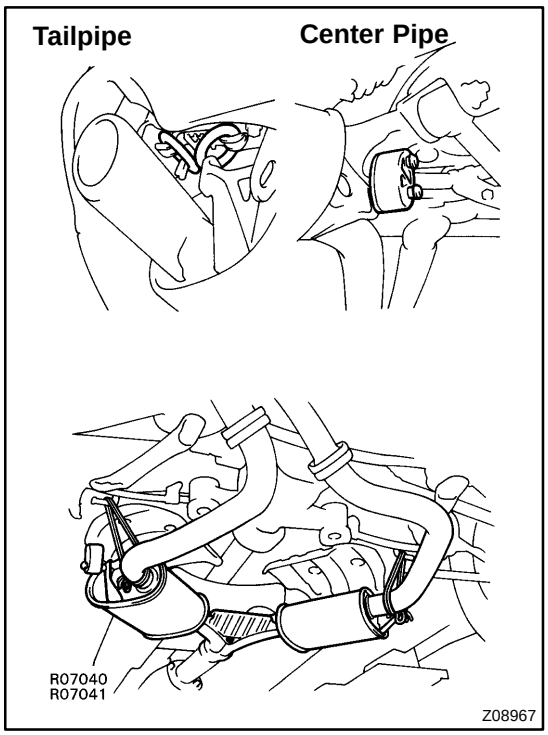

1. REMOVE REAR WHEEL

Torque: 103 N·m (1,050 kgf·cm, 76 ft·lbf)

2. DISCONNECT EXHAUST PIPE SUPPORTS

(a) Remove the 2 exhaust pipe support rings.

(b) Support the exhaust pipe securely.

(c) Remove the 2 exhaust pipe support O-rings.

3. REMOVE COTTER PIN, LOCK CAP AND LOCK NUT

(a) Remove the cotter pin and lock cap.

(b) With applying the brakes, remove the nut.

Torque: 289 N·m (2,950 kgf·cm, 213 ft·lbf)

4. REMOVE LOWER SUSPENSION ARM BRACE

Remove the 4 bolts and lower suspension arm brace.

Torque: 18 N·m (180 kgf·cm, 13 ft·lbf)

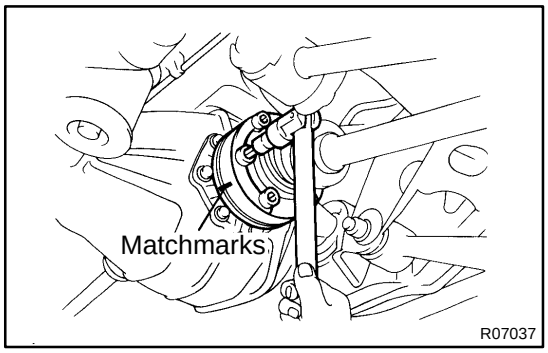

5. REMOVE REAR DRIVE SHAFT

(a) Place matchmarks on the drive shaft and side gear shaft.

(b) 2JZ-GE:

Using 8 mm hexagon wrench, remove the 6 hexagon bolts and 3 washers with applying the brakes.

Torque: 68 N·m (695 kgf·cm, 50 ft·lbf)

(c) 2JZ-GTE:

Using a 10 mm hexagon wrench, remove the 6 hexagon bolts and 2 washers with applying the brakes.

Torque: 83 N·m (850 kgf·cm, 61 ft·lbf)

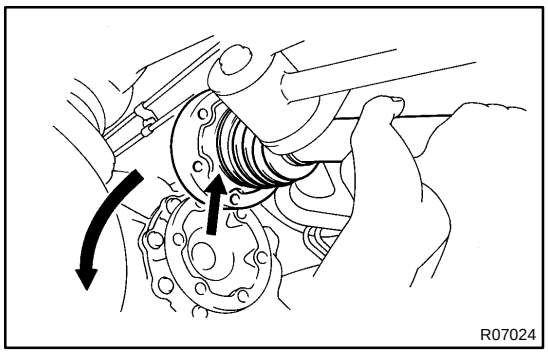

(d) Disconnect the inboard joint from the differential side gear shaft.

(e) Hold the inboard joint side of the drive shaft so that the outboard joint side does not bend too much.

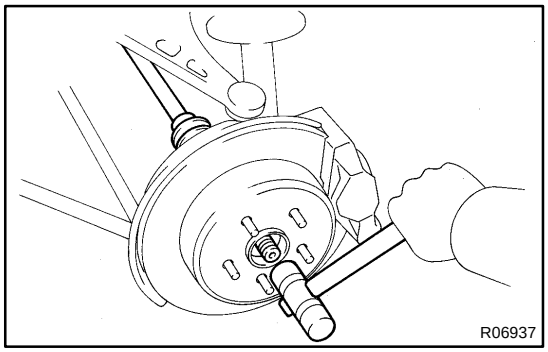

(f) Using a hammer, lightly tap the end of the drive shaft to disengage the axle hub and remove the drive shaft.

NOTICE:

- ★ **Be careful not to damage the boots and speed sensor rotor of the drive shaft, and oil seal of the axle hub.**
- ★ **At the time of installation, make sure the outboard joint side of the drive shaft does not bend too much.**

SA0PS-01

DISASSEMBLY

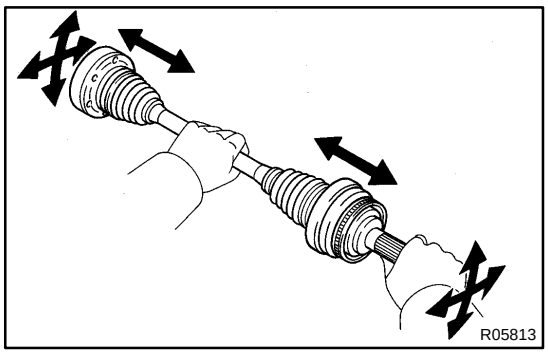

1. CHECK DRIVE SHAFT

(a) Check that operation of the joint is smooth within the sliding region in the axial direction.

HINT:

If a large angle is used for the cross-groove type joint, the joint will feel like it is catching, but this does not indicate an abnormality.

(b) Check that the boots are not cracked, damaged or leaking.

(c) Check that there are no scratches on the speed sensor rotor.

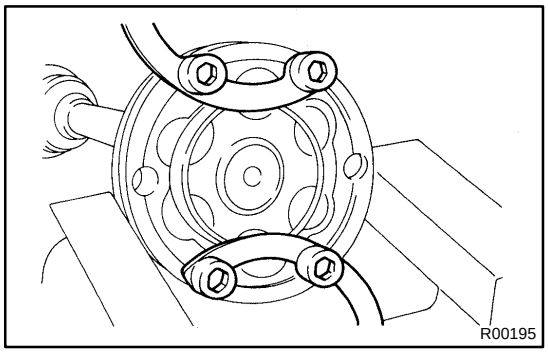

2. REMOVE END COVER

(a) Using a screwdriver, remove the end cover.

(b) Use bolts, nuts and washers to keep the inboard joint together.

NOTICE:

Tighten the bolt by hand to avoid scratching the flange surface.

3. REMOVE BOOT CLAMPS

Using a side cutter or pliers, remove the 4 boot clamps.

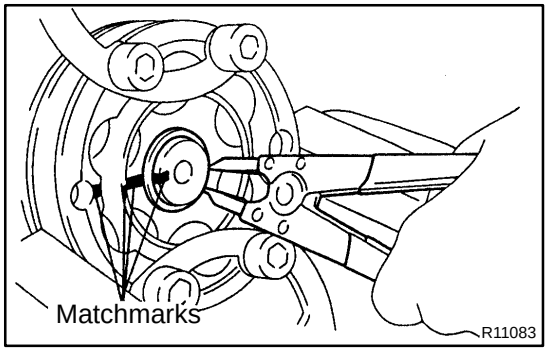

4. REMOVE INBOARD JOINT

(a) Place matchmarks on the inboard joint and drive shaft.

(b) Using a snap ring expander, remove the snap ring.

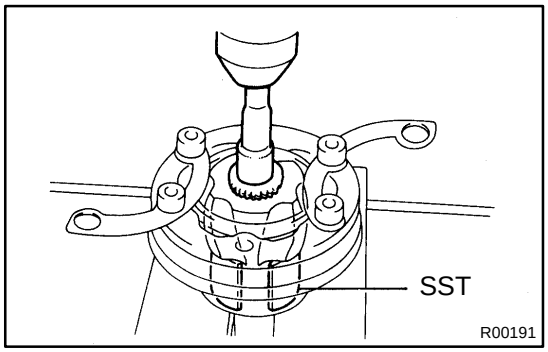

(c) Using SST, an extension bar and a press, remove the inboard joint from the drive shaft.

SST 09726-12023 (09726-01031)

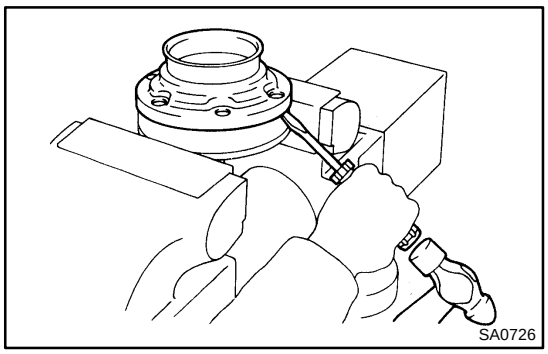

(d) Mount the inboard joint in a soft jaw vise.
(e) Using a screwdriver and hammer, remove the inboard joint cover from the inboard joint.

NOTICE:

Make sure the cage and inner race are not positioned too much to one side of the outer race.

5. REMOVE BOOTS FROM DRIVE SHAFT

Remove the inboard joint boot and outboard boot.

SA1TE-01

REASSEMBLY

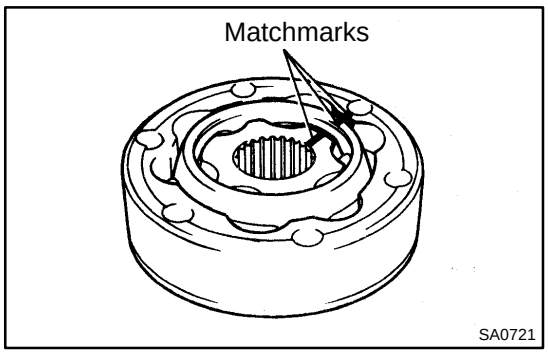

1. ASSEMBLE INBOARD JOINT

If the joint has come apart, reassemble it in the following order.

(a) Align the matchmarks placed before removal.

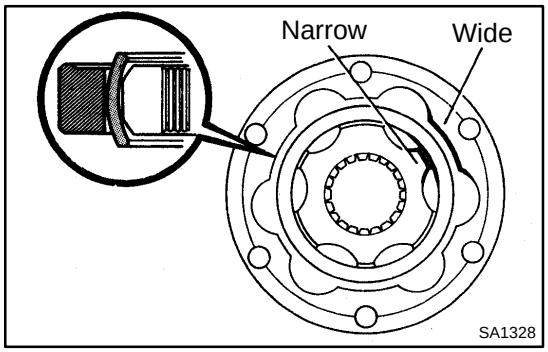

HINT:

When the matchmarks have disappeared, do the following procedure.

(1) Install the inner race to the cage so that the indented bevelled part of the inner race is on the opposite side to the bevelled top of the cage.

(2) Install the outer race so that the indented side of the outer race is facing the same side as the bevelled surface of the cage.

(3) Match the narrow projections of the inner race with the wide projections of the outer race.

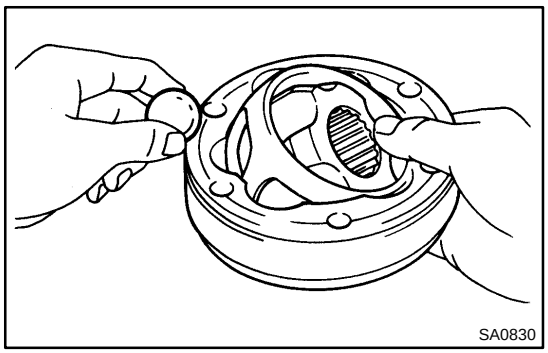

(b) Tilt the cage and inner race to the side and insert the balls one by one.

NOTICE:

When the cage and inner race are tilted over, support the joint with your hand to prevent the balls from falling out.

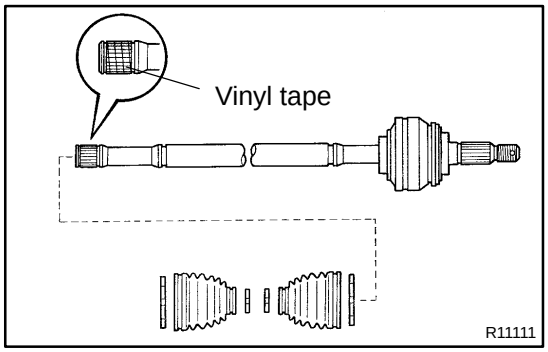

2. TEMPORARILY INSTALL 2 NEW BOOTS AND 4 NEW BOOT CLAMPS

(a) Place 4 new boot clamps to the boots.

HINT:

Before installing the boots, wrap vinyl tape around the spline of the shaft to prevent damaging the boots.

(b) Install 2 boots to the drive shaft.

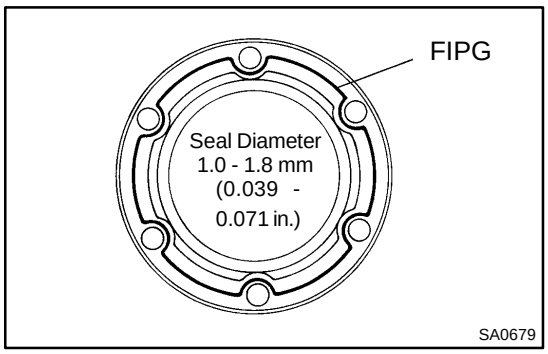

3. INSTALL INBOARD JOINT COVER

(a) Apply FIPG to the inboard joint cover as shown in the illustration.

FIPG:

Part No.08826-00801, THREE BOND 1121 or equivalent

Install a nozzle that is cut to 1 mm (0.04 in.) opening.

HINT:

Avoid applying an excessive amount to the surface.

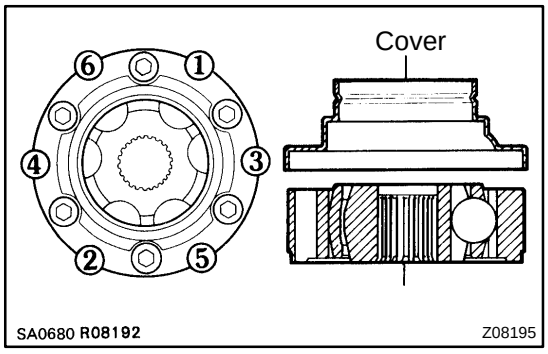

(b) Clean the surface of the inboard joint facing the cover.

(c) Align the bolt holes of the cover with those of the inboard joint, then insert the hexagon bolts.

(d) Use a plastic hammer to tap the rim of the inboard joint cover in place. Do this in the order shown, and repeat several times.

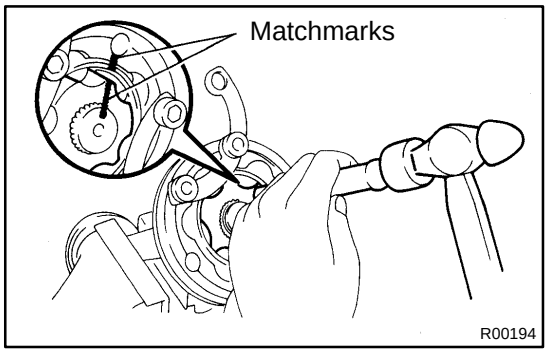

4. INSTALL INBOARD JOINT

(a) Align the matchmarks placed before removal.

(b) Using a brass bar and hammer, install the inboard joint onto the drive shaft.

NOTICE:

Check that the brass bar is touching the inner race, and not the cage.

(c) Using a snap ring expander, install a new snap ring.

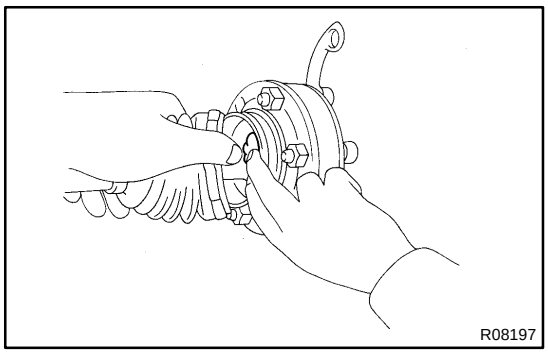

5. ASSEMBLE BOOTS TO JOINTS

Before assembling the boot, pack with only the same amount of grease that was wiped off.

Grease capacity:

Inboard and Outboard joint:

100 - 105 g (3.5 - 3.7 oz.)

HINT:

Use the grease supplied in the boot kit.

NOTICE:

★ **Keep grease off the joint connection groove of the boot.**

★ **Pack with grease all over the ball contact surface inside the joint.**

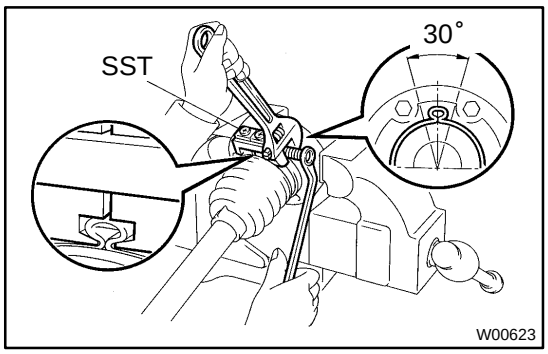

6. 2JZ-GTE:
INSTALL NEW BOOT CLAMPS TO BOTH BOOTS

(a) Position the clamp onto the boot.

HINT:

Pinch the inboard side of the boot clamp, as shown in the illustration.

(b) Place SST onto the clamp.
SST 09521-24010

(c) Tighten the SST so that the clamp is pinched.

NOTICE:

Do not overtighten the clamp by the SST.

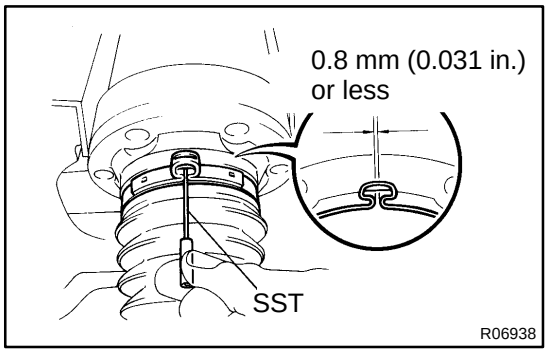

(d) Using SST, adjust the clearance of the clamp.
SST 09240-00020
Clearance: 0.8 mm (0.031 in.) or less

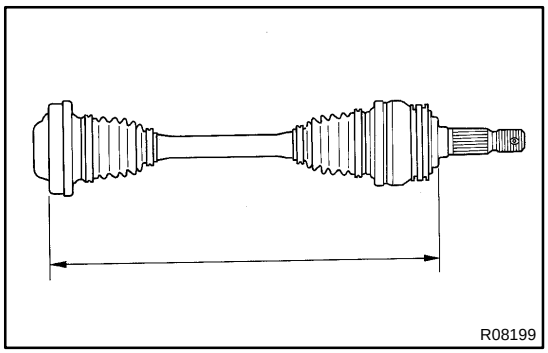

(e) The drive shaft is designed to move ±20 mm from the standard position.
Drive shaft standard length

	RH	LH
M/T	598.5 mm (23.602 in.)	547.5 mm (21.555 in.)
A/T	598.5 mm (23.602 in.)	553.5 mm (21.791 in.)

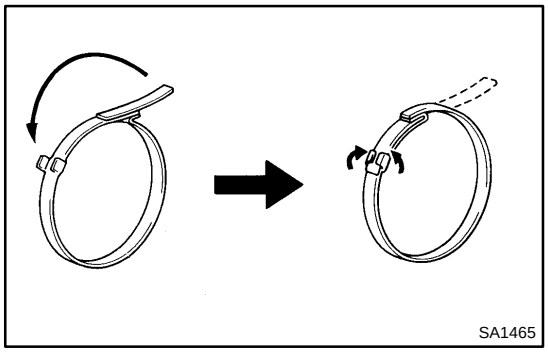

7. 2JZ-GE:
INSTALL NEW BOOT CLAMPS TO BOTH BOOTS

(a) Be sure the boot is on the shaft groove.

(b) Using a screwdriver, bend the clamp and lock it as shown.

(c) The drive shaft is designed to move ± 20 mm from standard position.
Drive shaft standard length

RH	582.4 mm (22.929 in.)
LH	537.4 mm (21.157 in.)

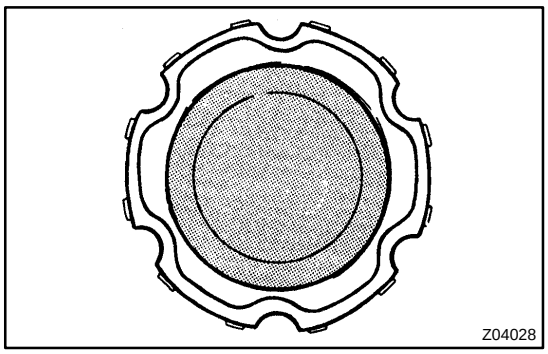
Z04028

8. INSTALL NEW END COVER

(a) Pack grease into the end cover.
Grease capacity: 50 - 55 g (1.8 - 1.9 oz.)

(b) Clean the surface of the inboard joint facing the cover.

(c) Glue on a new gasket, with the side with adhesive on it facing toward the outer race side of the inboard joint.

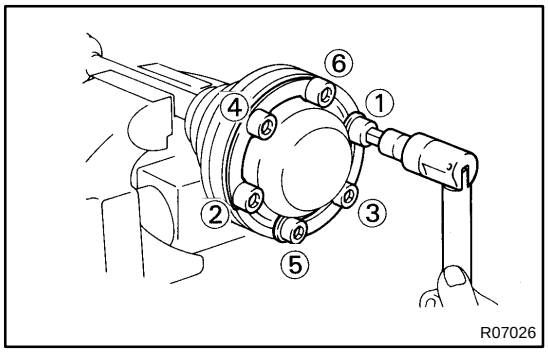

R07026

(d) Align the bolt holes of the cover with those of the inboard joint.

(e) Install the 6 hexagon bolts and 2 washers to the end cover side.

(f) Install the 6 nuts to the boot side.

(g) 2JZ-GE:
Using a 8 mm hexagon wrench, tighten the bolts. Do this in the order shown, and repeat several times.

(h) 2JZ-GTE:
Using a 10 mm hexagon wrench, tighten the bolts. Do this in the order shown, and repeat several times.

(i) Check that the claw of the end cover touches the inboard joint.

9. CHECK DRIVE SHAFT (See page SA-52)

REAR DIFFERENTIAL SIDE GEAR SHAFT OIL SEAL

SA0PV-02

COMPONENTS

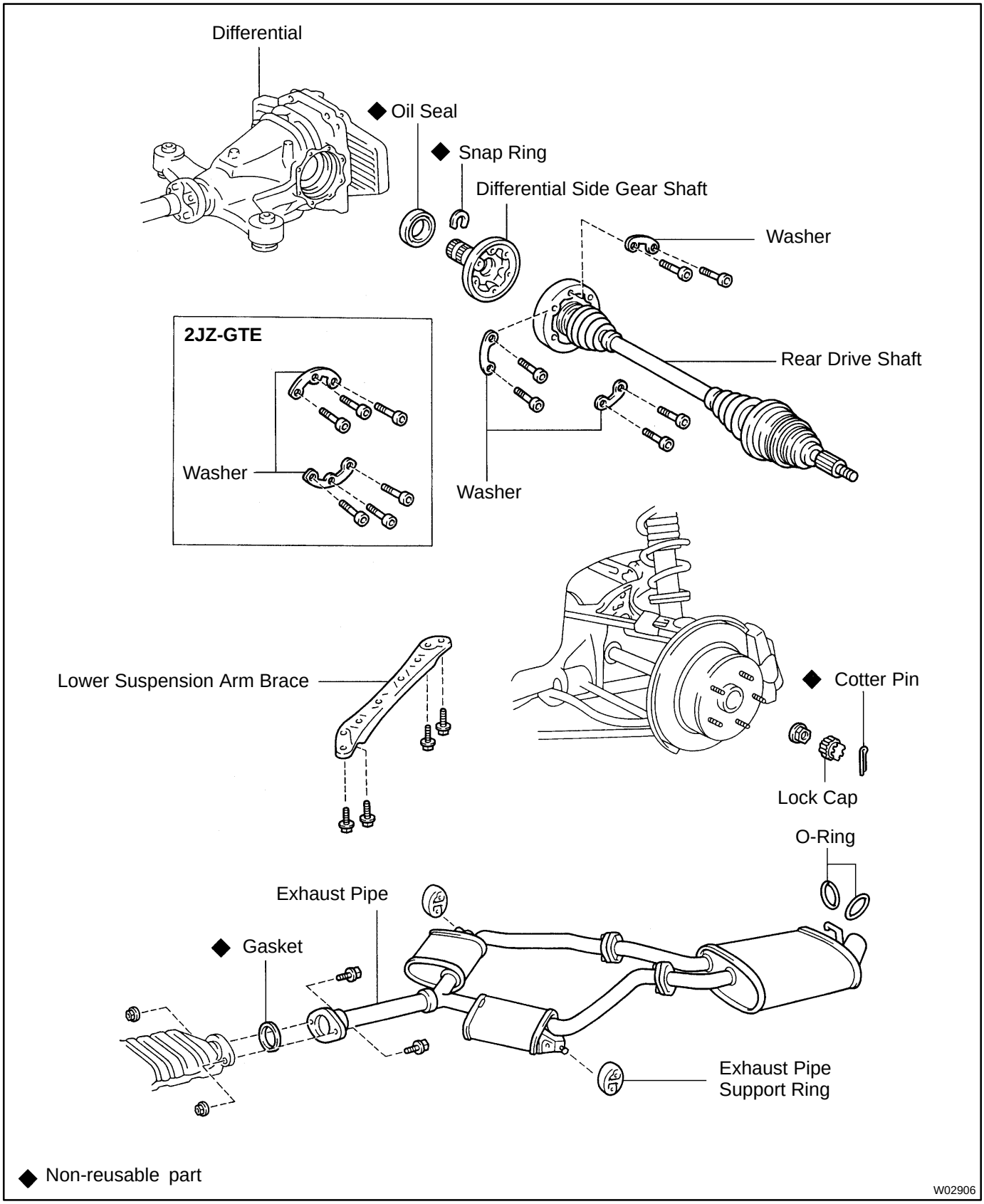

SA0PW-01

REPLACEMENT

1. DRAIN HYPOID GEAR OIL

2. REMOVE REAR DRIVE SHAFT (See page SA-51)

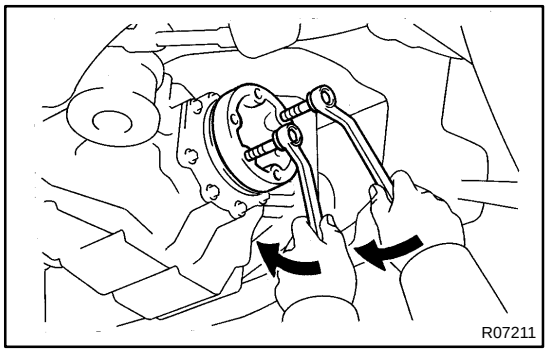

3. REMOVE SIDE GEAR SHAFT

(a) 2JZ-GTE M/T:
Equally tighten both bolts at the same time and pull out the side gear shaft.

NOTICE:
Pull out the side gear shaft until a nut can fit behind the shaft. Pulling the shaft out too far will damage the dust cover.

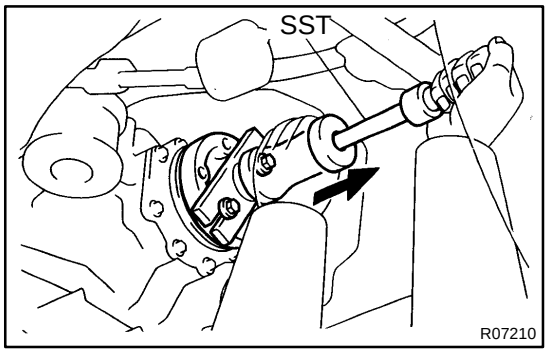

(b) Using SST and 2 bolts, nuts, remove the side gear shaft.
SST 09520-24010

4. REMOVE SNAP RING

Remove the snap ring from the side gear shaft.

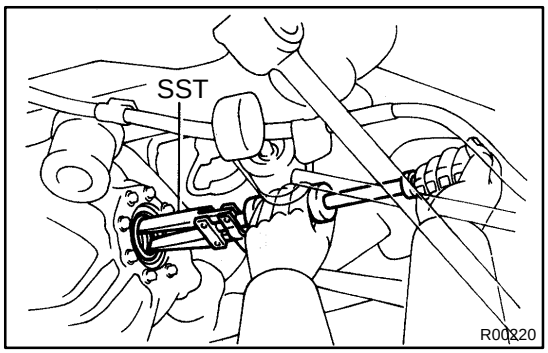

5. REMOVE SIDE GEAR SHAFT OIL SEAL

Using SST, remove the oil seal.
SST 09308-00010

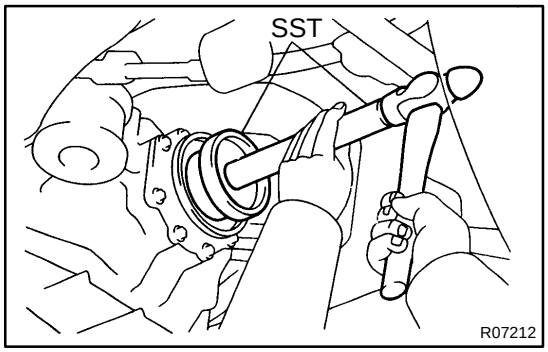

6. INSTALL SIDE GEAR SHAFT OIL SEAL

(a) 2JZ-GTE M/T:
Using SST and a hammer, install a new oil seal.
SST 09223-15030, 09950-70010 (09951-07150)

(b) Except 2JZ-GTE M/T:
Using SST and a hammer, install a new oil seal.
SST 09608-32010, 09950-70010 (09951-07150)

(c) Apply MP grease to the oil seal lip.

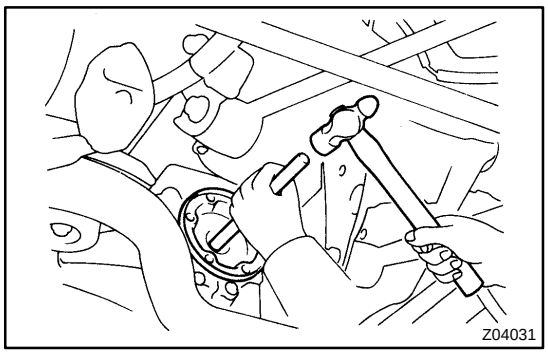

7. INSTALL SIDE GEAR SHAFT

(a) Install a new snap ring to the side gear shaft.

(b) Coat MP grease onto the snap ring.

(c) Using a brass bar and hammer, install the side gear shaft to the differential.

NOTICE:

Be careful not damage the side gear shaft and oil seal.

HINT:

Whether or not the side gear shaft is making contact with the pinion shaft can be determined by the sound or feeling when driving it in.

8. CHECK INSTALLATION OF SIDE GEAR SHAFT

Check that the side gear shaft will not come out by trying to pull it out by hand.

9. INSTALL REAR DRIVE SHAFT (See page SA-58)

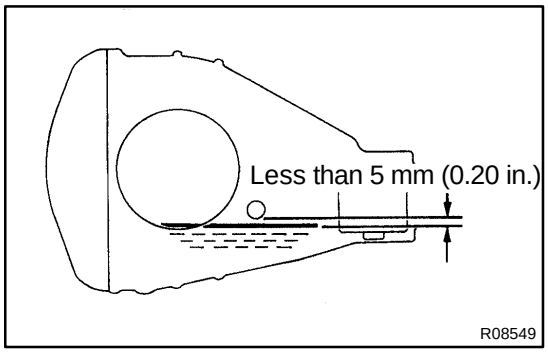

10. FILL DIFFERENTIAL WITH HYPOID GEAR OIL

Torque: 49 N·m (500 kgf·cm, 36 ft·lbf)

Oil grade: Hypoid gear oil API GL-5

Viscosity:

Above -18 ˚C (0 ˚F) SAE 90

Below -18 ˚C (0 ˚F) 80W-90 or SAE 80W

Capacity: 1.35 liters (1.43 US qts, 1.19 Imp. qts)

REAR DIFFERENTIAL CARRIER

SA0PX-02

COMPONENTS

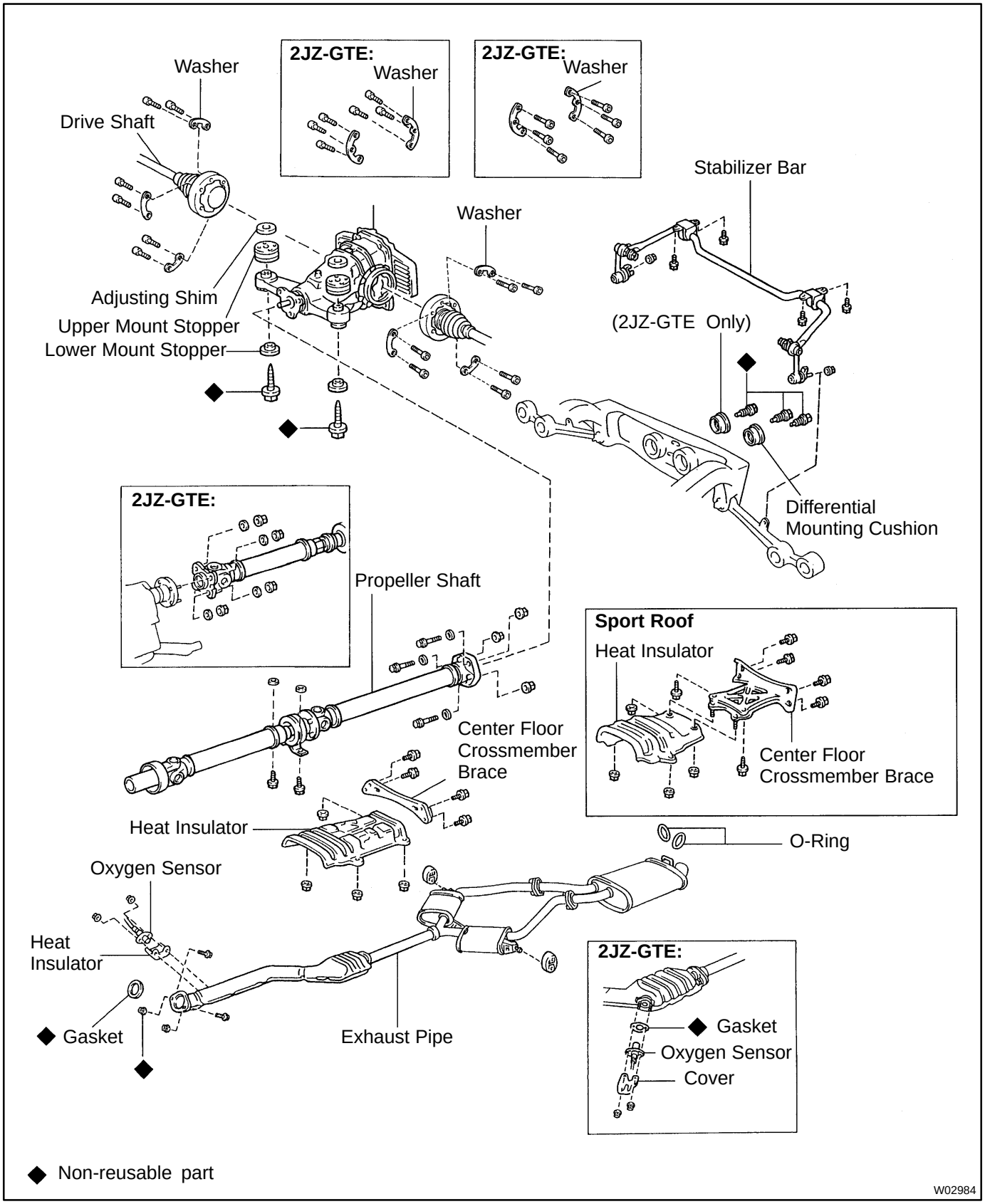

2JZ-GTE M/T

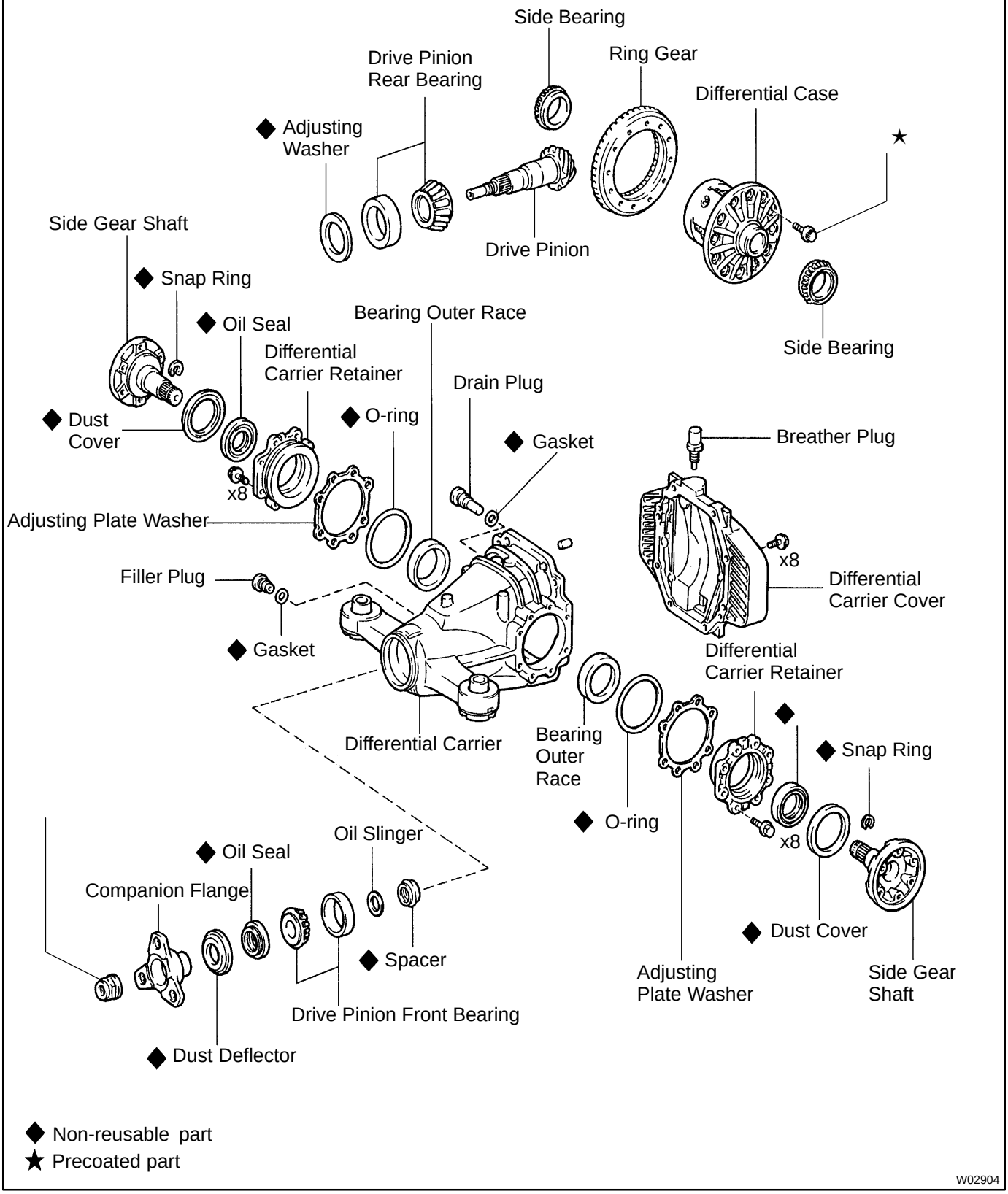
Side Bearing
Drive Pinion Rear Bearing
Ring Gear
Differential Case
◆ Adjusting Washer
★
Side Gear Shaft
Drive Pinion
◆ Snap Ring
◆ Oil Seal
Bearing Outer Race
Differential Carrier Retainer
Drain Plug
Side Bearing
◆ Dust Cover
◆ O-ring
◆ Gasket
Breather Plug
x8
Adjusting Plate Washer
x8
Differential Carrier Cover
Filler Plug
◆ Gasket
Differential Carrier
Differential Carrier Retainer
Bearing Outer Race
◆ Snap Ring
◆ O-ring
x8
Oil Slinger
◆ Oil Seal
Companion Flange
◆ Dust Cover
◆ Spacer
Adjusting Plate Washer
Side Gear Shaft
Drive Pinion Front Bearing
◆ Dust Deflector
◆ Non-reusable part
★ Precoated part
W02904

Except 2JZ-GTE M/T

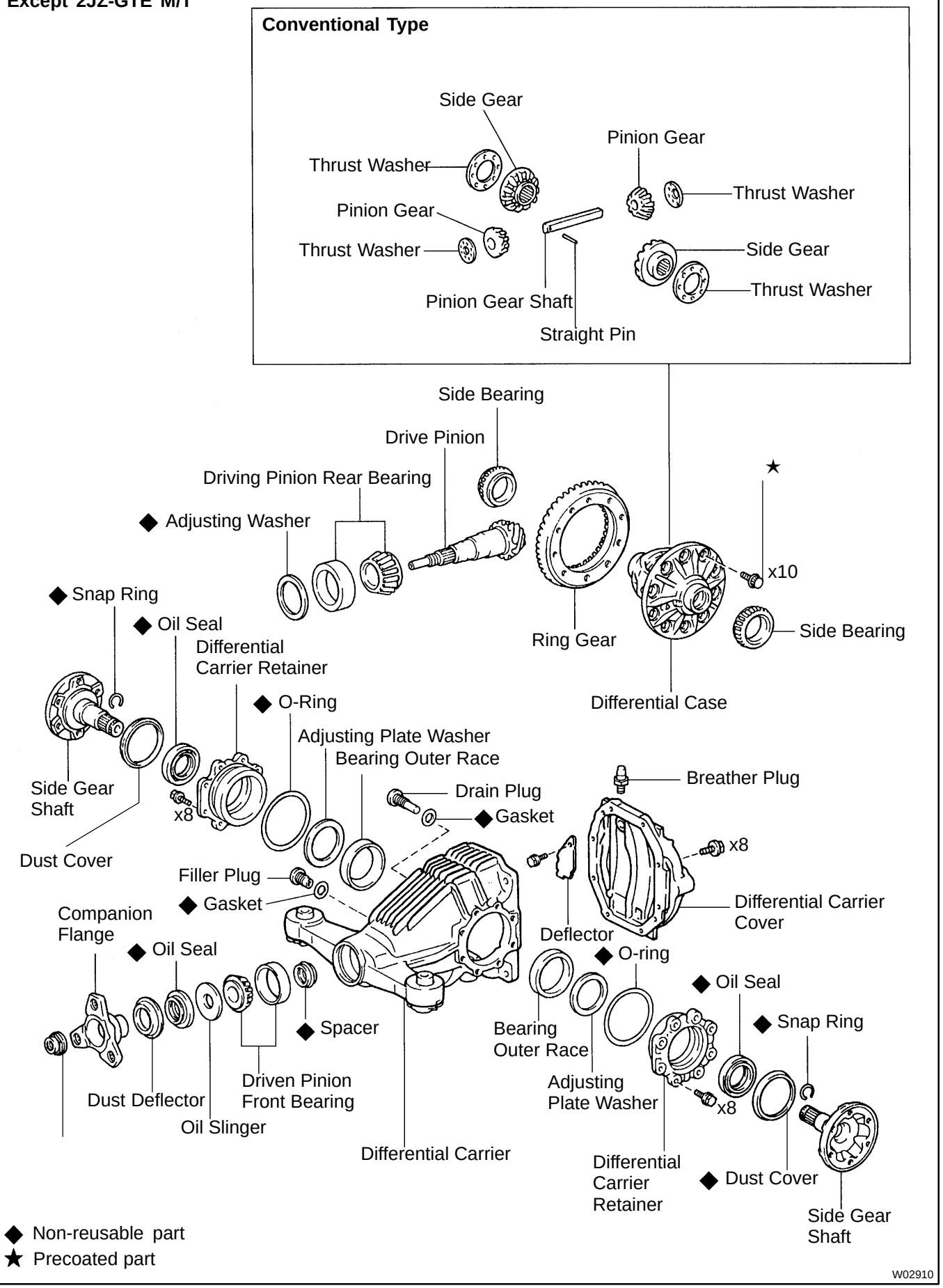

SA0PY-02

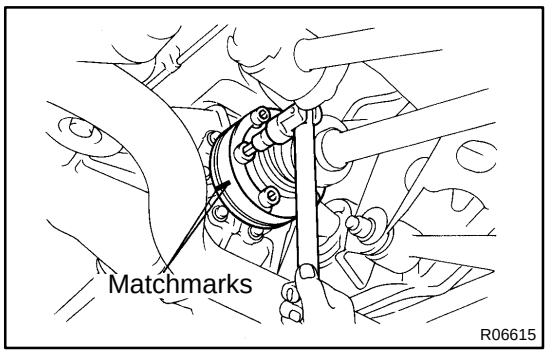

REMOVAL

1. DRAIN HYPOID GEAR OIL

2. REMOVE PROPELLER SHAFT
(See page PR-4)

3. DISCONNECT BOTH REAR DRIVE SHAFTS FROM DIFFERENTIAL

(a) Place matchmarks on the drive shaft and side gear shaft.

(b) 2JZ-GE:
Using a 8 mm hexagon wrench, remove the 16 bolts and disconnect both drive shafts from the differential.

(c) 2JZ-GTE:
Using a 10 mm hexagon wrench, remove the 16 bolts and disconnect both drive shafts from the differential.
Torque: 83 N·m (850 kgf·cm, 61 ft·lbf)

HINT:
Apply a light coat of engine oil on the threads of the bolts.
Torque: 65 N·m (660 kgf·cm, 48 ft·lbf)

(d) Support both drive shafts securely.

4. REMOVE REAR STABILIZER BAR
(See page SA-108)

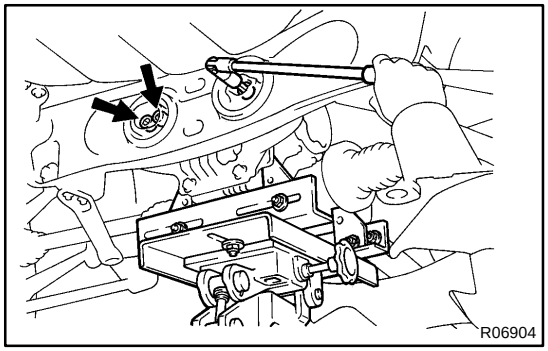

5. REMOVE DIFFERENTIAL

(a) Support the differential with a jack.

(b) Using a 12 mm hexagon wrench, remove the bolts.
Torque: 142 N·m (1,450 kgf·cm, 105 ft·lbf)

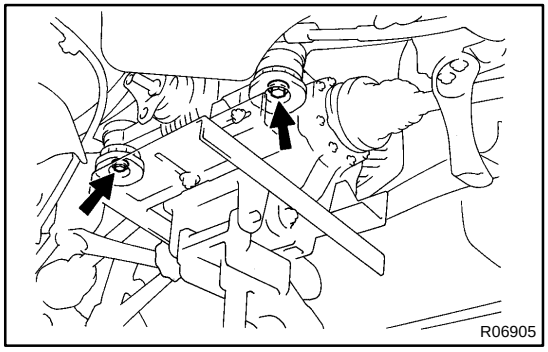

(c) Remove the 2 bolts and lower mount stoppers.
Torque: 147 N·m (1,500 kgf·cm, 108 ft·lbf)

(d) Remove the differential.

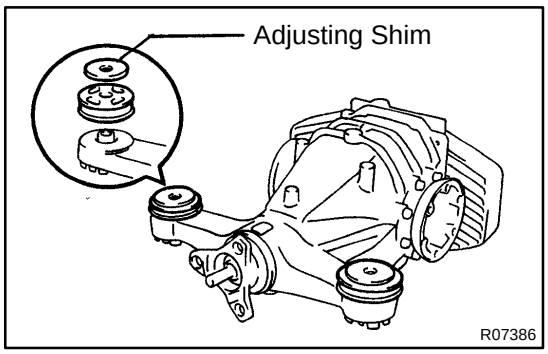

(e) Remove the upper mount stopper from the differential carrier.

HINT:

★ During production, some vehicles did not need adjusting shims to be fitted.

★ Use the upper mount stopper which was removed.

SA0PZ-01

DISASSEMBLY

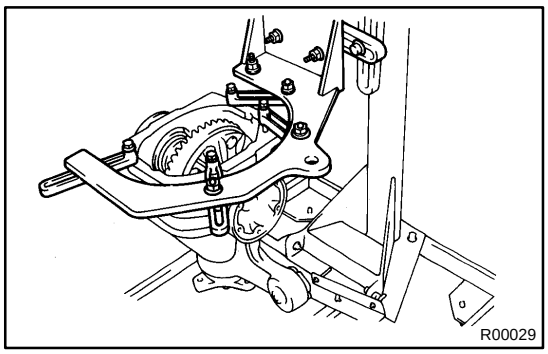

1. SET DIFFERENTIAL CARRIER TO OVERHAUL STAND ETC., AS SHOWN

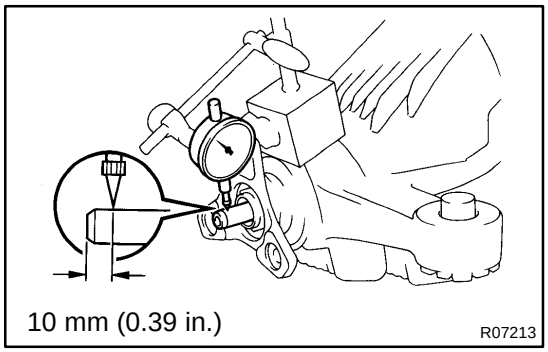

2. CHECK DRIVE PINION SHAFT RUNOUT

Using dial indicator, measure the drive pinion shaft runout.

	Maximum runout
ALL	0.08 mm (0.0031 in.)

If the runout is not within the specification, replace the drive pinion and/or ring gear.

3. REMOVE DIFFERENTIAL CARRIER COVER

(a) Remove the 8 bolts from the carrier cover.

(b) Using a brass bar and hammer, separate the cover and carrier.

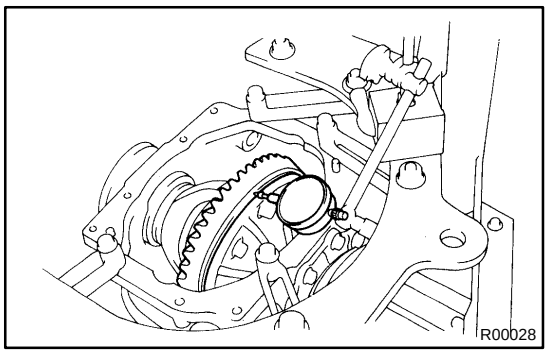

4. CHECK RING GEAR RUNOUT

Using a dial indicator, measure the ring gear runout.

	Maximum runout
2JZ-GTE M/T	0.08 mm (0.0031 in.)
Others	0.05 mm (0.0020 in.)

If the runout is not within the specification, replace the drive pinion, ring gear and/or differential case.

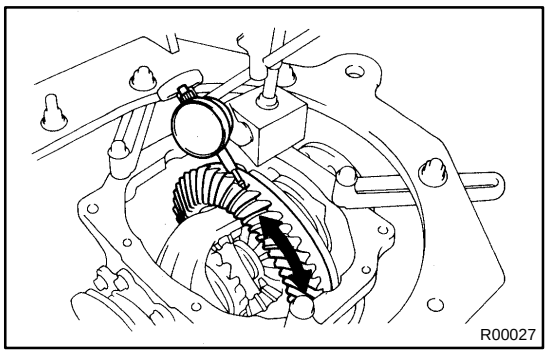

5. CHECK RING GEAR BACKLASH

Using a dial indicator, measure the backlash of the ring gear and drive pinion at 3 points (minimum) and check that the average value is within the specification.

	Backlash (average value)
ALL	0.08 - 0.13 mm (0.0031 - 0.0051 in.)

NOTICE:

The difference between the maximum and minimum measured values must be less than 0.05 mm (0.0020 in.).

If the backlash is not within the specification, adjust the ring gear backlash (See page SA-74).

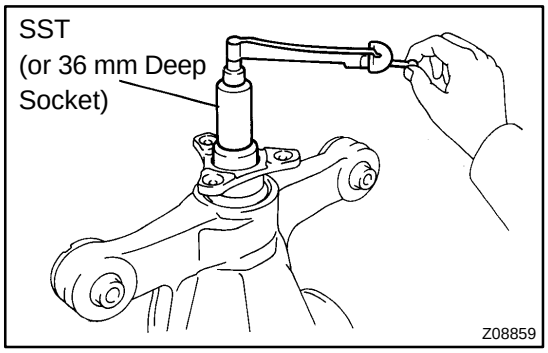

6. MEASURE DRIVE PINION PRELOAD

Using SST (or a 36 mm deep socket) and a torque wrench, measure the preload of backlash between the drive pinion and ring gear.

SST 09229-55010

	Preload (at starting)
2JZ-GTE M/T	1.0 - 1.2 N·m (10 - 12 kgf·cm, 8.9 - 10.6 in.·lbf)
Others	0.5 - 0.8 N·m (5 - 8 kgf·cm, 4.3 - 6.9 in.·lbf)

7. CHECK TOTAL PRELOAD

Using SST (or a 36 mm deep socket) and a torque wrench, measure the preload with the teeth of the drive pinion and ring gear in contact.

SST 09229-55010

	Total preload (at starting) Drive pinion preload plus
2JZ - GTE M/T	0.4 - 0.6 N·m (4 - 6 kgf·cm, 3.4 - 5.2 in.·lbf)
Others	0.5 - 0.8 N·m (5 - 8 kgf·cm, 4.3 - 6.9 in.·lbf)

If necessary, disassemble and inspect the differential.

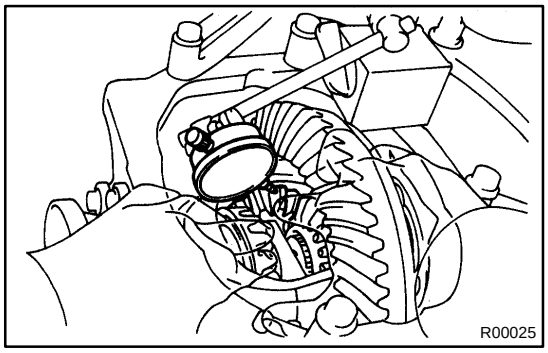

8. CONVENTIONAL DIFFERENTIAL ONLY: CHECK PINION GEAR BACKLASH

Using a dial indicator, measure the pinion gear backlash while holding one side gear toward the case.

Backlash: 0.05 - 0.20 mm (0.0020 - 0.0079 in.)

If the backlash is not within the specification, install the correct thrust washer (See page SA-74).

9. CHECK TOOTH CONTACT PATTERN (See page SA-74)

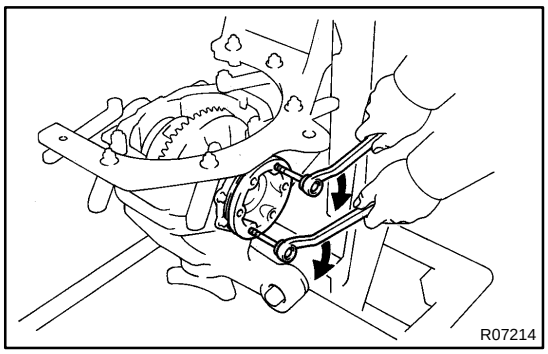

10. REMOVE SIDE GEAR SHAFT

(a) 2JZ-GTE M/T:
Equally tighten both bolts at the same time and pull out the side gear shaft.

NOTICE:
Pull out the side gear shaft until a nut can fit behind the shaft. Pulling the shaft out too far will damage the dust cover.

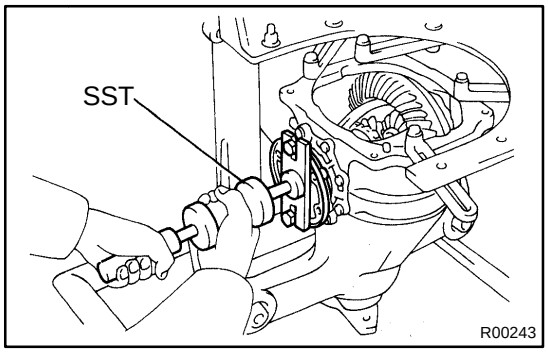

(b) Using SST, 2 bolts and nuts, remove the side gear shaft.
SST 09520-24010

(c) Using a screwdriver, remove the snap ring from the side gear shaft.

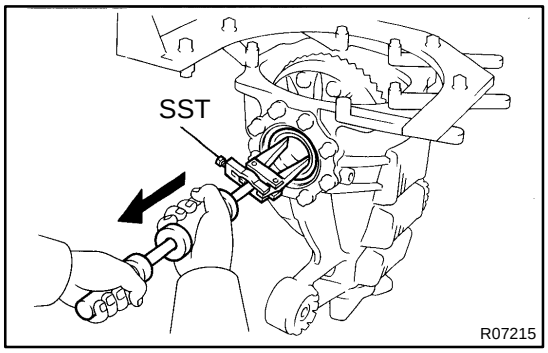

11. REMOVE SIDE GEAR SHAFT OIL SEALS

Using SST, remove the oil seal.
SST 09308-00010

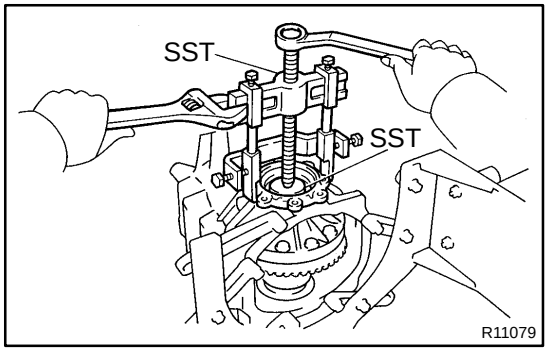

12. REMOVE DIFFERENTIAL CARRIER RETAINER (AND ADJUSTING PLATE WASHER)

(a) Remove the 8 bolts.

(b) 2JZ-GTE M/T:
Using SST, remove the carrier retainer and adjusting plate washer.
SST 09550-10012 (09558-10010),
09950-40010 (09951-04010, 09952-04020, 09953-04020, 09954-04010, 09955-04070, 09957-04010, 09958-04010)

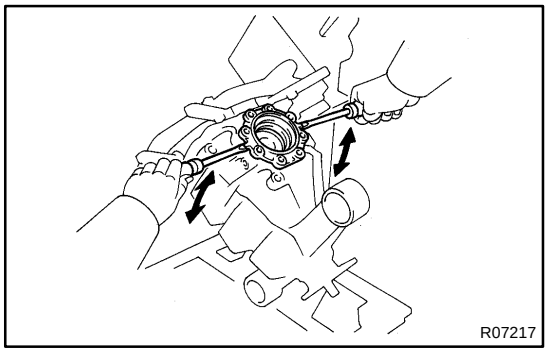

(c) Others:
Using 2 screwdrivers, remove the carrier retainer.

(d) Using a screwdriver, remove the O-ring from the carrier retainer.

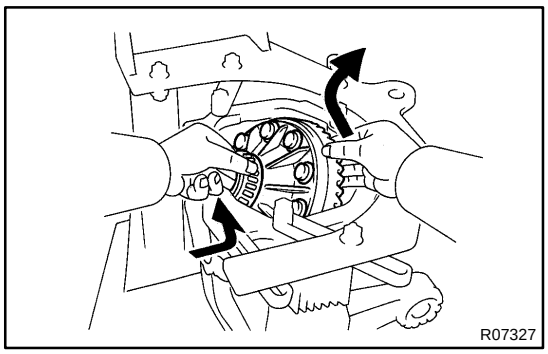

13. REMOVE DIFFERENTIAL CASE

Take the differential case out of the carrier while lifting the ring gear side, as shown in the illustration.

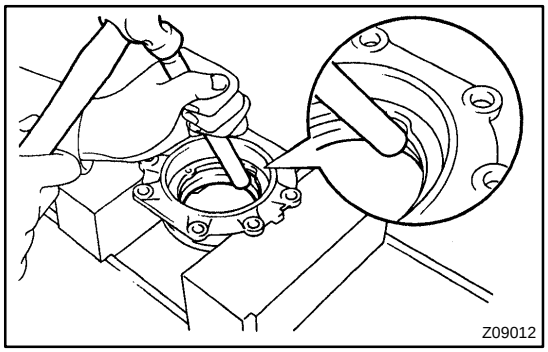

14. REMOVE SIDE BEARING OUTER RACE (AND ADJUSTING PLATE WASHER)

(a) 2JZ-GTE M/T:
Using a brass bar and hammer, remove the outer race.

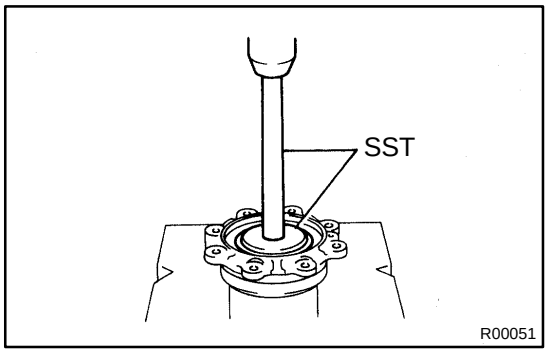

(b) Others:
Using SST and a press, remove the outer race and adjusting plate washer.
SST 09950-60020 (09951-00710),
09950-70010 (09951-07150)

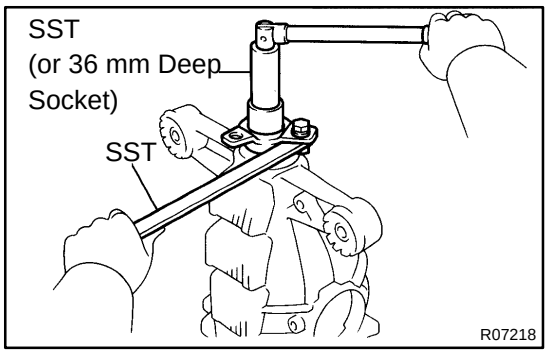

15. REMOVE DRIVE PINION, OIL SLINGER (2JZ- GTE M/T), SPACER AND COMPANION FLANGE

(a) Using a chisel and hammer, loosen the staked part of the nut.

(b) Using SST (or 36 mm deep socket wrench), remove the nut.
SST 09229-55010,
09330-00021

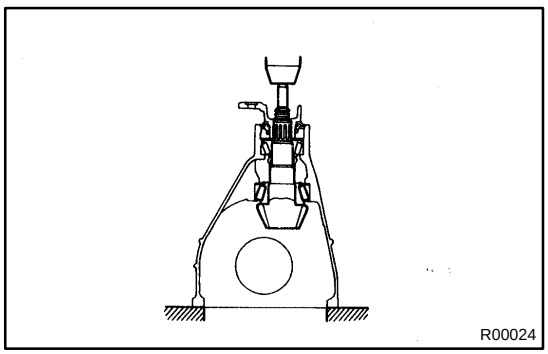

(c) Using a press, remove the drive pinion with the rear bearing and spacer.

NOTICE:

Be careful not to drop the drive pinion.

(d) Remove the companion flange.

(e) Remove the oil slinger (2JZ-GTE M/T) and spacer from the drive pinion.

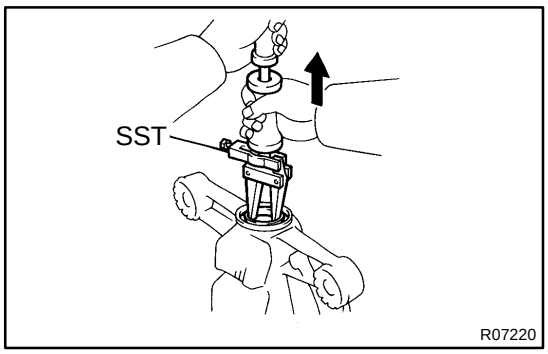

16. REMOVE OIL SEAL

Using SST, remove the oil seal.

SST 09308-00010

17. REMOVE OIL SLINGER (EXCEPT 2JZ-GTE M/T) AND FRONT BEARING

Remove the oil slinger (except 2JZ-GTE M/T) and front bearing by hand.

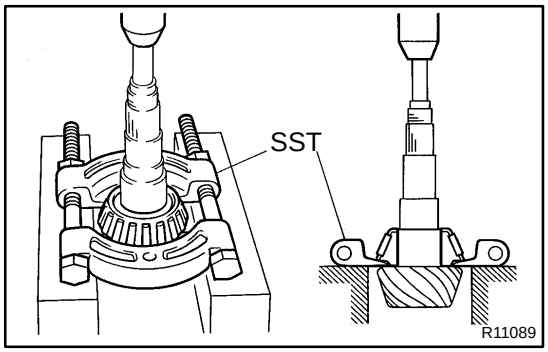

18. REMOVE REAR BEARING FROM DRIVE PINION

Using SST and a press, remove the rear bearing from the drive pinion.

SST 09950-00020

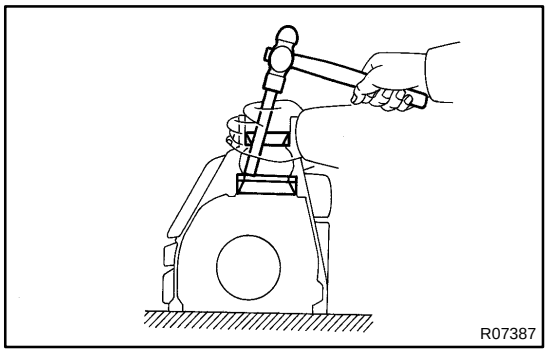

19. REMOVE FRONT AND REAR BEARING OUTER RACES AND ADJUSTING PLATE WASHER

Using a brass bar and hammer, remove the outer races and adjusting plate washer from the differential carrier.

HINT:

Measure the adjusting plate washer thickness and make a note down of it for reassemble.

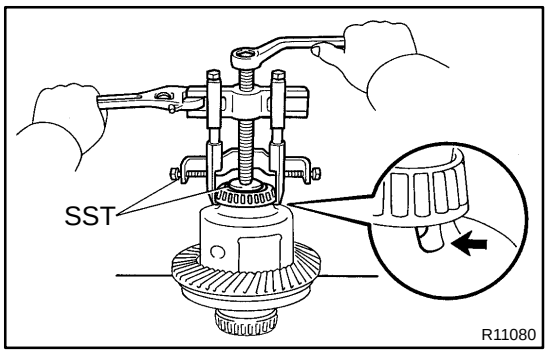

20. REMOVE LH AND RH SIDE BEARINGS

Using SST, remove the LH and RH side bearings from the differential case.

SST 09550-10012 (09558-10010),
09950-40010 (09951-04010, 09952-04010, 09953-04020, 09954-04010, 09955-04070, 09957-04010, 09958-04010)

HINT:

Fix the claws of SST to the notch in the differential case.

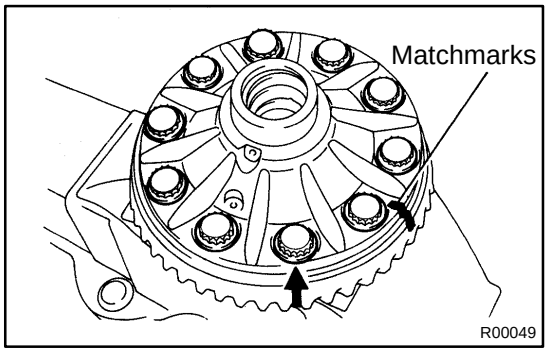

21. REMOVE RING GEAR

(a) Place matchmarks on the ring gear and differential case.
(b) Remove the ring gear set bolts.
(c) Using a plastic hammer, tap on the ring gear to separate it from the differential case.

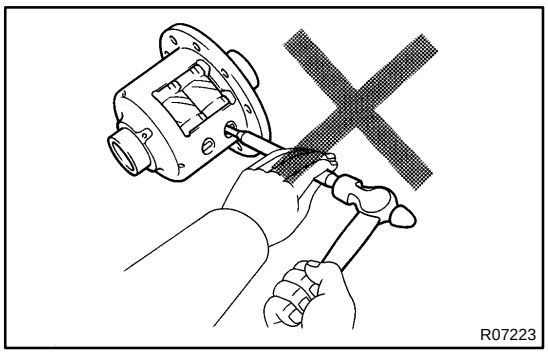

22. CONVENTIONAL DIFFERENTIAL: DISASSEMBLE DIFFERENTIAL CASE

NOTICE:

Do not disassemble the differential case except conventional differential.

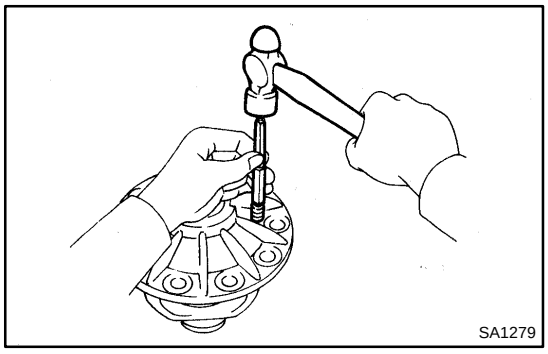

(a) Using a pin punch and hammer, remove the straight pin.
(b) Remove these parts from the differential case.
- ★ Pinion shaft
- ★ 2 pinion gears
- ★ 2 pinion gear thrust washers
- ★ 2 side gears
- ★ 2 side gears thrust washers

SA0Q0-01

REPLACEMENT

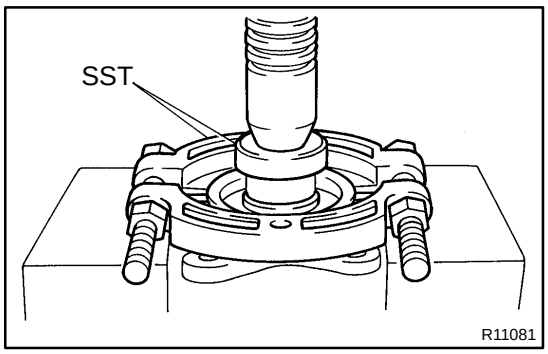

1. REPLACE COMPANION FLANGE DUST DEFLECTOR

(a) Using SST and a press, remove the dust deflector.
SST 09950-00020, 09950-60010 (09951-00510)

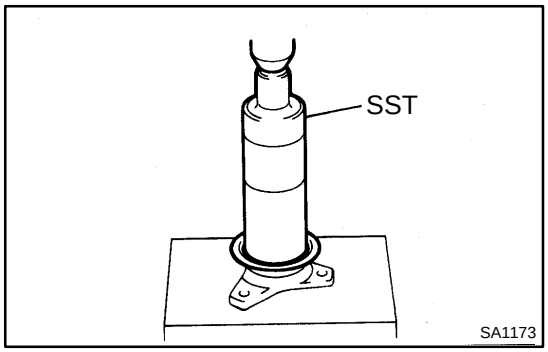

(b) 2JZ-GTE M/T:
Using SST and a press, install a new dust deflector.
SST 09316-2001 1, 09316-60011 (09316-00011)

(c) Others:
Using SST and a press, install a new dust deflector.
SST 09316-6001 1 (09316-00011)

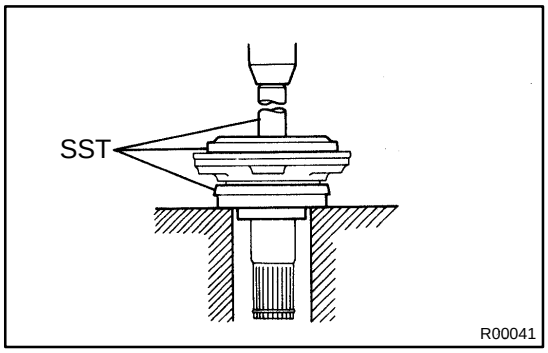

2. REPLACE SIDE GEAR SHAFT DUST COVER

(a) Using a screwdriver, remove the dust cover.

(b) Using SST and a press, install a new dust cover.
SST 09502- 24010, 09950- 60020 (09951- 00780), 09950-70010 (09951-07150)

SA1TF-01

REASSEMBLY

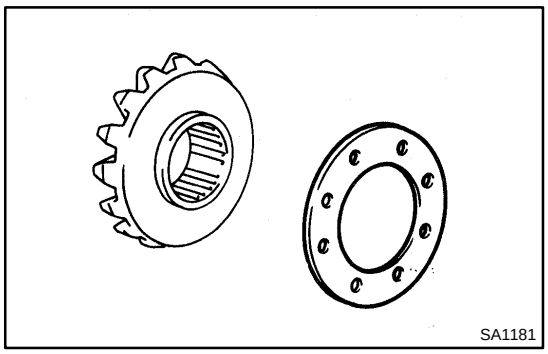
SA1181

1. CONVENTIONAL DIFFERENTIAL ONLY: ADJUST DIFFERENTIAL PINION GEAR BACKLASH

(a) Install the proper thrust washers on the side gears.

HINT:

Using the table below, select thrust washers which will ensure that the backlash is within the specification.

Thrust washer thickness

Thickness mm (in.)	Thickness mm (in.)
1.6 (0.063)	1.8 (0.071)
1.7 (0.067)	-

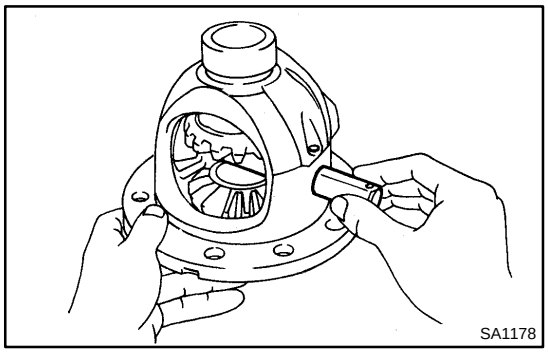
SA1178

(b) Install the side gears, pinion gears, pinion gear thrust washers and pinion shaft in the differential case.

HINT:

Align the holes of the differential case and pinion shaft.

(c) Push the side gear shafts gently into the differential case by hand and install them.

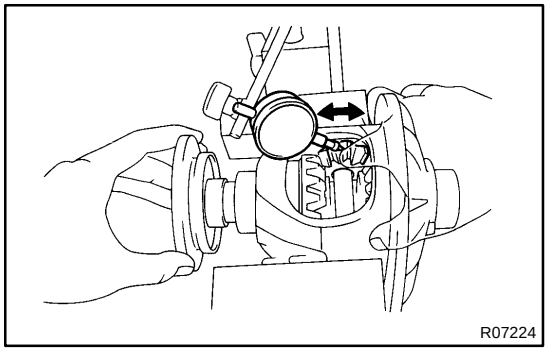
R07224

(d) Using a dial indicator, measure the pinion gear backlash while holding one side gear toward the case.

Backlash: 0.05 - 0.20 mm (0.0020 - 0.0079 in.)

If the backlash is not within the specification, install different thickness side gear thrust washers.

(e) Remove the side gear shaft.

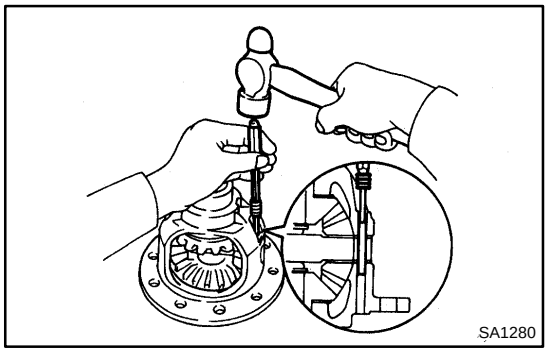
SA1280

2. CONVENTIONAL DIFFERENTIAL ONLY: INSTALL STRAIGHT PIN AND STAKE DIFFERENTIAL CASE

(a) Using a pin punch and hammer, install the straight pin through the differential case and hole of the pinion shaft.

(b) Stake the differential case.

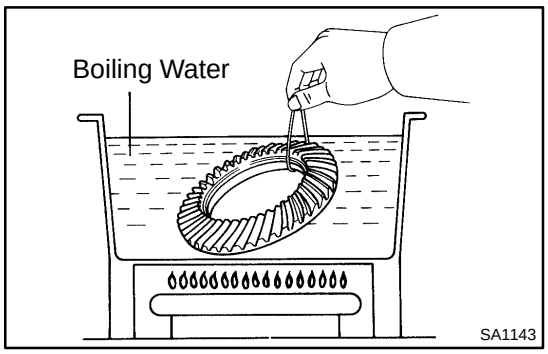

3. INSTALL RING GEAR ON DIFFERENTIAL CASE

(a) Clean the contact surfaces of the differential case, the threads of the ring gear and differential case.

(b) Heat the ring gear in boiling water.

(c) Carefully remove the ring gear from the boiling water.

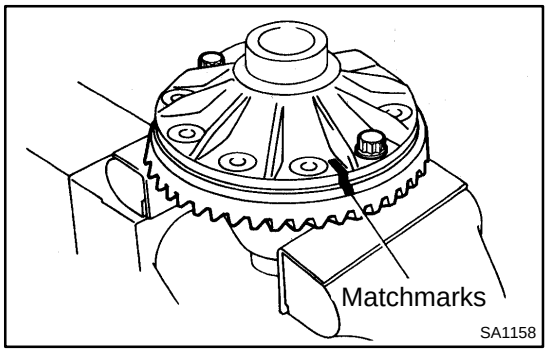

(d) After the moisture on the ring gear has completely evaporated, quickly install the ring gear to the differential case.

HINT:

Align the matchmarks on the ring gear and the differential case.

(e) Temporarily tighten the 2 bolts so that the bolt holes in the ring gear and differential case are not misaligned.

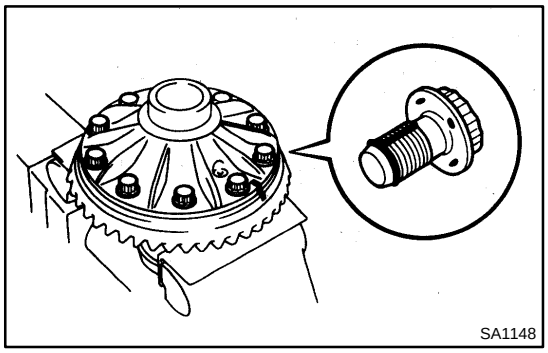

(f) After the ring gear has cooled sufficiently, install new ring gear set bolts to which thread lock has been applied.

Thread lock:

Part No. 08833-00100, THREE BOND 1360 K or equivalent.

NOTICE:

New ring gear set bolts should be used in every case.

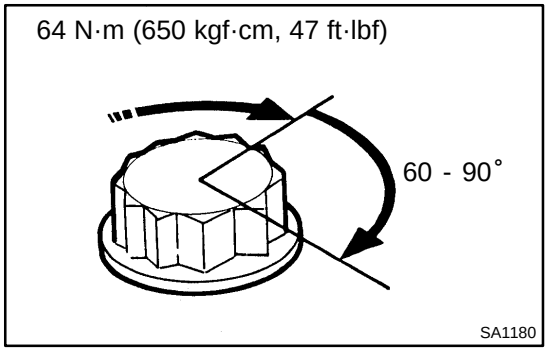

(g) Torque the set bolts uniformly and a little at a time.

Torque: 64 N·m (650 kgf·cm, 47 ft·lbf)

(h) Tighten the bolts an additional 60 - 90 °.

NOTICE:

Tighten the bolts in diagonally opposite pairs.

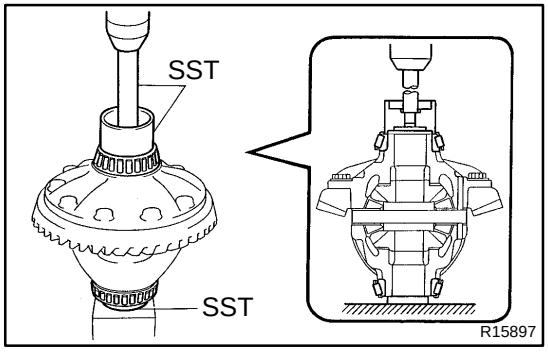

4. INSTALL SIDE BEARINGS

(a) 2JZ-GTE M/T:

Using SST and a press, install the side bearings.

SST 09710- 30050, 09726- 36010, 09950- 70010 (09951-07150)

(b) Others:

Using SST and a press, install the side bearings.

SST 09710- 30050, 09950- 60010 (09950- 00560), 09950-70010 (09951-07150)

5. INSTALL DRIVE PINION BEARING OUTER RACES AND ADJUSTING PLATE WASHER

NOTICE:

Always reassemble with a new adjusting plate washer.

HINT:

The adjusting plate washer is used for adjusting the tooth contact pattern. 42 types of washer with differential thicknesses are available.

(a) First fit a washer with the same thickness as the washer which was removed, then after checking the tooth contact pattern, replace the washer with one of a different thickness if necessary.

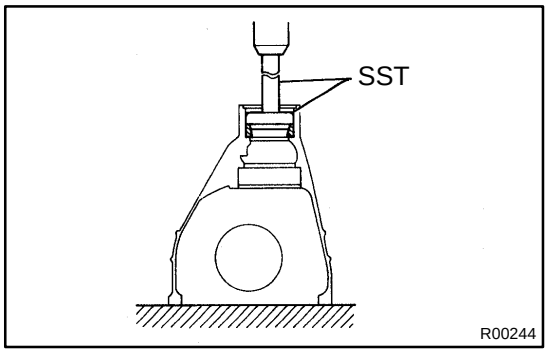

(b) 2JZ-GTE M/T:
Using SST and a press, install the front bearing outer race.
SST 09502-24010, 09950-70010 (09951-07150)

(c) Others:
Using SST and a press, install the front bearing outer race.
SST 09950-60020 (09951-00710),
09950-70010 (09951-07150)

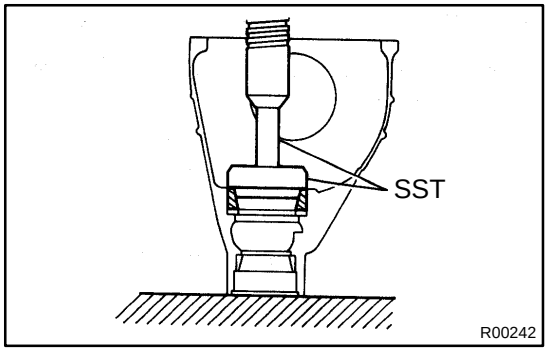

(d) 2JZ-GTE M/T:
Using SST and a press, install a new adjusting plate washer and the rear bearing outer race.
SST 09950-60020 (09951-01030),
09950-70010 (09951-07150)

(e) Others:
Using SST and a press, install a new adjusting plate washer and the rear bearing outer race.
SST 09250-1001 1 (09252-10010, 09255-10011)

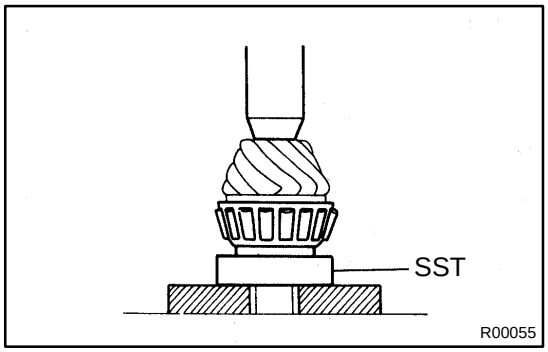

6. INSTALL REAR BEARING TO DRIVE PINION

(a) 2JZ-GTE M/T:
Using SST and a press, install the rear bearing.
SST 09316-2001 1

(b) Others:
Using SST and a press, install the rear bearing.
SST 09502-24010

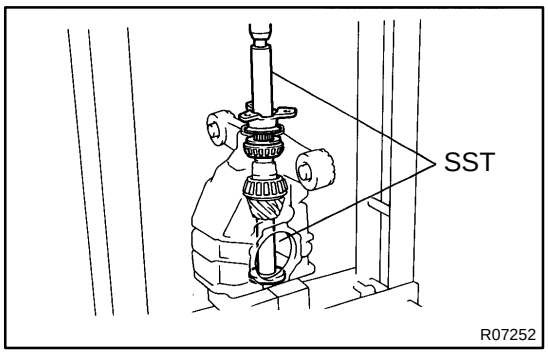

7. TEMPORARILY INSTALL DRIVE PINION, FRONT BEARING, OIL SLINGER (EXCEPT 2JZ- GTE M/T) AND COMPANION FLANGE

(a) Position the drive pinion in the differential carrier.

(b) Using SST and a press, install the front bearing, oil slinger (except 2JZ-GTE M/T) and companion flange.

SST 09608-04031, 09608-06041

HINT:

Assemble the spacer, oil slinger (2JZ-GTE M/T) and oil seal after adjusting the tooth contact pattern.

NOTICE:

Be careful not to press the bearing too far onto the drive pinion's bearing surface.

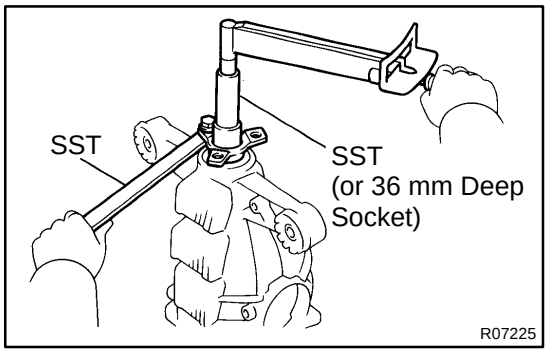

8. TEMPORARILY ADJUST DRIVE PINION PRELOAD

(a) Adjust the drive pinion preload by tightening the nut.

HINT:

Using SST (or a 36 mm deep socket wrench) to hold the companion flange, tighten the nut.

SST 09229-55010, 09330-00021

NOTICE:

As there is no spacer, tighten the nut a little at a time, being careful not to overtighten it.

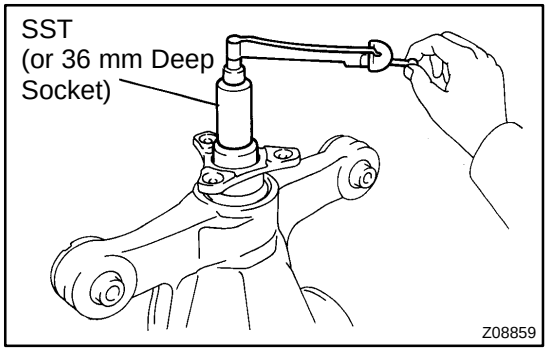

(b) Using SST (or a 36 mm deep socket) and a torque wrench, measure the drive pinion preload.

SST 09229-55010

	New bearing preload (at starting)
2JZ-GTE M/T	2.0 - 2.5 N·m (20 - 25 kgf·cm, 17.3 - 21.7 in.·lbf)
Others	1.5 - 1.8 N·m (15 - 18 kgf·cm, 13.0 - 16.0 in.·lbf)

	Reused bearing preload (at starting)
2JZ-GTE M/T	1.0 - 1.2 N·m (10 - 12 kgf·cm, 8.9 - 10.6 in.·lbf)
Others	0.5 - 0.8 N·m (5 - 8 kgf·cm, 4.3 - 6.9 in.·lbf)

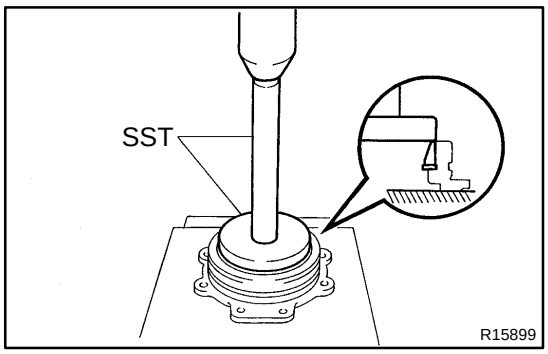

9. INSTALL SIDE BEARING OUTER RACE AND ADJUST PLATE WASHER

(a) 2JZ-GTE M/T:
Using SST and a press, install the outer race.
SST 09950-60020 (09951-00910),
09950-70010 (09951-07150)

(b) Others:
Using SST and a press, install the outer race and adjusting plate washer.
SST 09950-60020 (09951-00810),
09950-70010 (09951-07150)

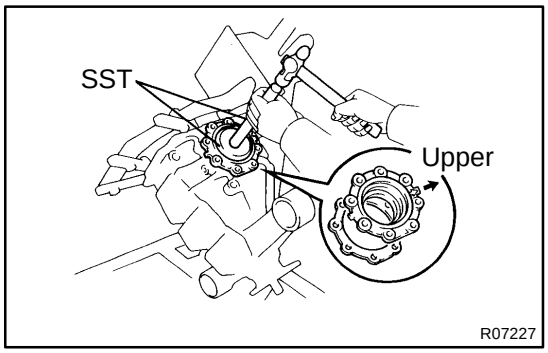

10. INSTALL DIFFERENTIAL CASE IN CARRIER

Install the drive side bearing in the differential carrier first, as shown in the illustration, then install the differential case.

11. 2JZ-GTE M/T:
INSTALL ADJUSTING PLATE WASHER AND DIFFERENTIAL CARRIER RETAINERS

(a) Place the adjusting washer to the carrier retainer.

(b) Using SST and a hammer, install the carrier retainer with adjusting washer.
SST 09950-60020 (09951-00910),
09950-70010 (09951-07150)

HINT:
Do not install a new O-ring and a new oil seal.
Install it after inspect tooth contact pattern.

(c) Tighten the 8 bolts.
Torque: 47 N·m (480 kgf·cm, 35 ft·lbf)

12. EXCEPT 2JZ-GTE M/T:
INSTALL DIFFERENTIAL CARRIER RETAINERS

(a) Using SST and a hammer, install the carrier retainer.
SST 09950-60020 (09951-00890),
09950-70010 (09951-07150)

(b) Tighten the 8 bolts.
Torque: 22 N·m (225 kgf·cm, 16 ft·lbf)

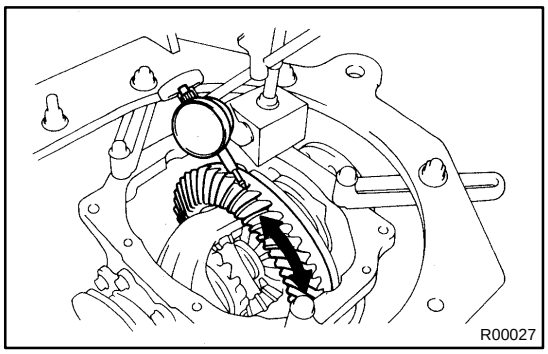

13. CHECK RING GEAR BACKLASH

Using a dial indicator, measure the backlash of the ring gear and drive pinion at 3 positions at least.

Backlash (average value):
0.08 - 0.13 mm (0.0031 - 0.0051 in.)

NOTICE:

The difference between the maximum and minimum measured values must be less than 0.05 mm (0.0020 in.).

HINT:

The measured values should be used for reference when selecting washers, so make a memo of the values.

If the backlash is not within the specification replace the washer on the ring gear side with one of a different thickness using the following procedure.

Adjusting washer thickness
2JZ-GTE M/T

No.	Thickness mm(in.)	No.	Thickness mm (in.)	No.	Thickness mm (in.)
18	1.18 (0.0465)	48	1.48 (0.0583)	78	1.78 (0.0701)
20	1.20 (0.0472)	50	1.50 (0.0591)	80	1.80 (0.0709)
22	1.22 (0.0480)	52	1.52 (0.0598)	82	1.82 (0.0717)
24	1.24 (0.0488)	54	1.54 (0.0606)	84	1.84 (0.0724)
26	1.26 (0.0496)	56	1.56 (0.0614)	86	1.86 (0.0732)
28	1.28 (0.0504)	58	1.58 (0.0622)	88	1.88 (0.0740)
30	1.30 (0.0512)	60	1.60 (0.0630)	90	1.90 (0.0748)
32	1.32 (0.0520)	62	1.62 (0.0638)	92	1.92 (0.0756)
34	1.34 (0.0528)	64	1.64 (0.0646)	08	1.08 (0.0425)
36	1.36 (0.0535)	66	1.66 (0.0654)	10	1.10 (0.0433)
38	1.38 (0.0543)	68	1.68 (0.0661)	12	1.12 (0.0441)
40	1.40 (0.0551)	70	1.70 (0.0669)	14	1.14 (0.0449)
42	1.42 (0.0559)	72	1.72 (0.0677)	16	1.16 (0.0457)
44	1.44 (0.0567)	74	1.74 (0.0685)		-
46	1.46 (0.0575)	76	1.76 (0.0693)		-

Except 2JZ-GTE M/T

No.	Thickness mm(in.)	No.	Thickness mm (in.)	No.	Thickness mm (in.)
02	2.02 (0.0795)	32	2.32 (0.0913)	62	2.62 (0.1031)
04	2.04 (0.0803)	34	2.34 (0.0921)	64	2.64 (0.1039)
06	2.06 (0.0811)	36	2.36 (0.0929)	66	2.66 (0.1047)
08	2.08 (0.0819)	38	2.38 (0.0937)	68	2.68 (0.1055)
10	2.10 (0.0827)	40	2.40 (0.0945)	70	2.70 (0.1063)
12	2.12 (0.0835)	42	2.42 (0.0953)	72	2.72 (0.1071)
14	2.14 (0.0843)	44	2.44 (0.0961)	74	2.74 (0.1079)
16	2.16 (0.0850)	46	2.46 (0.0969)	76	2.76 (0.1087)
18	2.18 (0.0858)	48	2.48 (0.0976)	78	2.78 (0.1094)
20	2.20 (0.0866)	50	2.50 (0.0984)	80	2.80 (0.1102)
22	2.22 (0.0874)	52	2.52 (0.0992)	82	2.82 (0.1110)
24	2.24 (0.0882)	54	2.54 (0.1000)	84	2.84 (0.1118)
26	2.26 (0.0890)	56	2.56 (0.1008)	86	2.86 (0.1126)
28	2.28 (0.0898)	58	2.58 (0.1016)	-	
30	2.30 (0.0906)	60	2.60 (0.1024)	-	

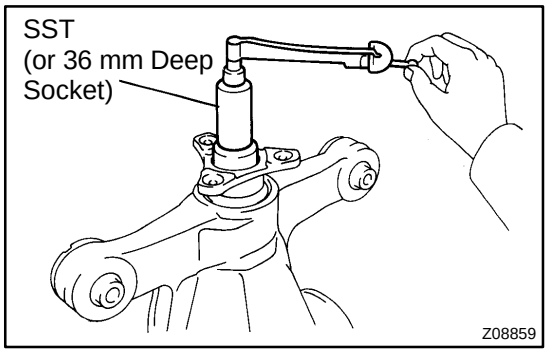

14. MEASURE TOTAL PRELOAD

Using SST (or a 36 mm deep socket) and a torque wrench, measure the preload with the teeth of the drive pinion and ring gear in contact.

SST 09229-55010

	Total preload (at starting) Drive pinion preload plus
2JZ-GTE M/T	0.4 - 0.6 N·m (4 - 6 kgf·cm, 3.5 - 5.2 in.·lbf)
Others	0.5 - 0.8 N·m (5 - 8 kgf·cm, 4.3 - 6.9 in.·lbf)

If the measured preload is less than the specification, replace the washer of the ring gear's tooth surface side with a thicker one.

If the preload is greater than the specification, replace the washer of the ring gear's tooth surface side with thinner one.

HINT:

Changing the washer thickness by 0.02 mm (0.0008 in.) will change the total preload by approx. 0.1 N·m (1 kgf·cm, 0.9 in.·lbf).

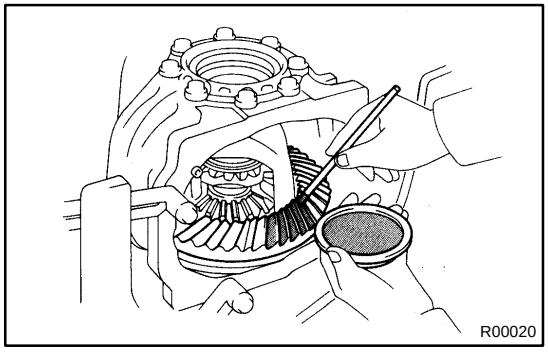

15. INSPECT TOOTH CONTACT PATTERN

(a) Coat 3 or 4 teeth at 3 different positions on the ring gear with red lead primer.

(b) Hold the companion flange firmly and rotate the ring gear in both directions.

(c) Inspect the tooth contact pattern.

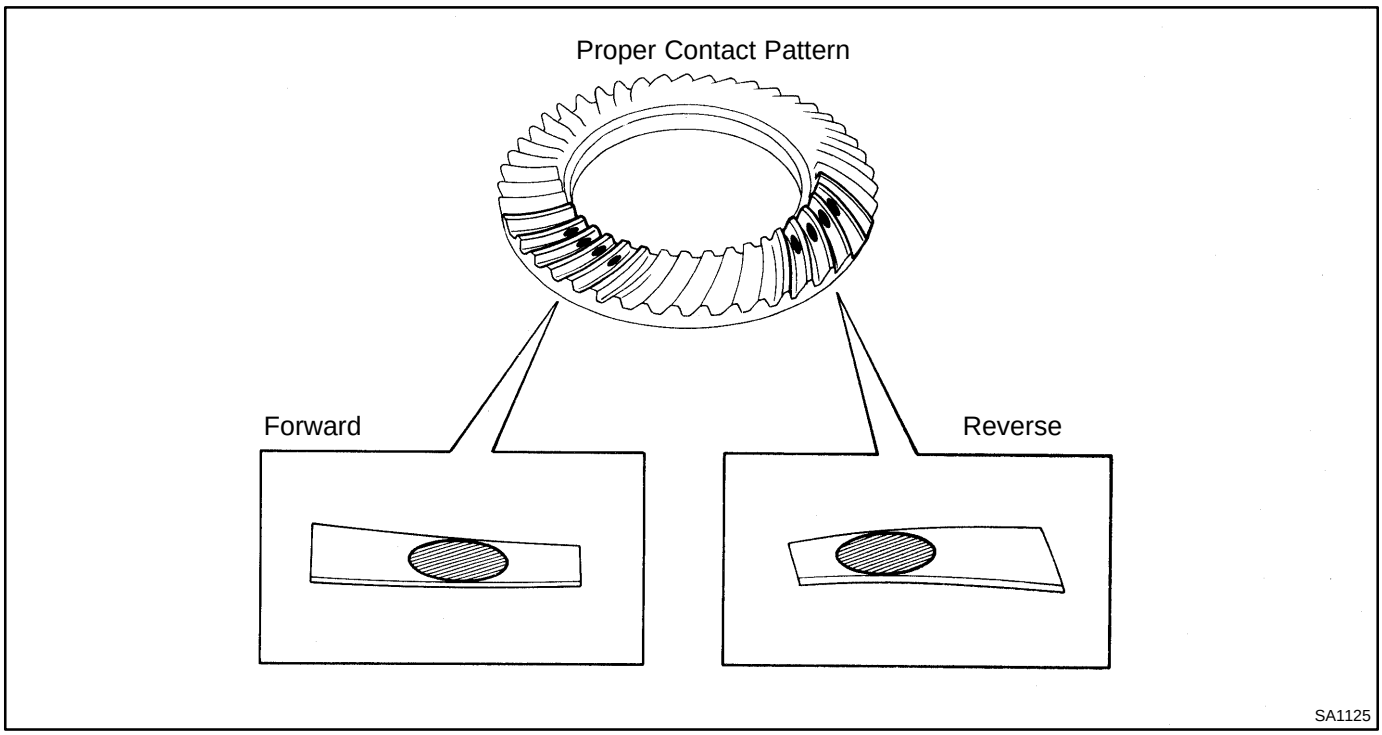

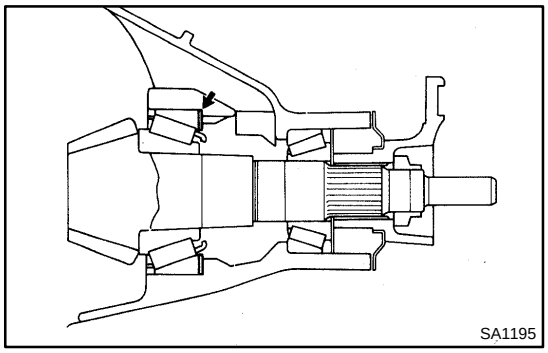

If tooth contact pattern is not correct, replace the adjusting washer installed on the front of the drive pinion rear bearing to adjust it.

NOTICE:

Be sure to always use a new part when replacing adjusting washer.

HINT:

Refer to the table below for selection of the adjusting washer.

Tooth contact pattern		Adjusting washer selection	
Forward	Reverse		
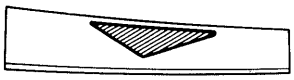		+ 0.08 mm (+ 0.0031 in.)	Replacing the washer with one 0.08 mm (0.0031 in.) thicker will give proper contact pattern.
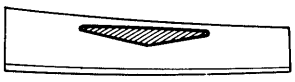		+ 0.14 mm (+ 0.0055 in.)	Replacing the washer with one 0.14 mm (0.0055 in.) thicker will give proper contact pattern.
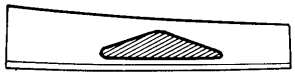	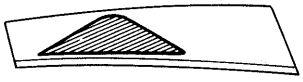	- 0.08 mm (- 0.0031 in.)	Replacing the washer with one 0.08 mm (0.0031 in.) thinner will give proper contact pattern.
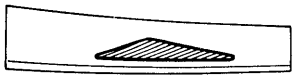	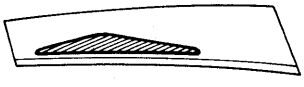	- 0.14 mm (- 0.0055 in.)	Replacing the washer with one 0.14 mm (0.0055 in.) thinner will give proper contact pattern.

V02917

HINT:
Adjust washer are available in 42 different thicknesses, in increments of 0.01 mm (0.004 in.).

Adjusting washer thickness
2JZ-GTE M/T

No.	Thickness mm (in.)	No.	Thickness mm (in.)	No.	Thickness mm (in.)
80	1.80 (0.0709)	94	1.94 (0.0764)	08	2.08 (0.0819)
81	1.81 (0.0713)	95	1.95 (0.0768)	09	2.09 (0.0823)
82	1.82 (0.0717)	96	1.96 (0.0772)	10	2.10 (0.0827)
83	1.83 (0.0720)	97	1.97 (0.0776)	11	2.11 (0.0831)
84	1.84 (0.0724)	98	1.98 (0.0780)	12	2.12 (0.0835)
85	1.85 (0.0728)	99	1.99 (0.0783)	13	2.13 (0.0839)
86	1.86 (0.0732)	00	2.00 (0.0787)	14	2.14 (0.0843)
87	1.87 (0.0736)	01	2.01 (0.0791)	15	2.15 (0.0846)
88	1.88 (0.0740)	02	2.02 (0.0795)	16	2.16 (0.0850)
89	1.89 (0.0744)	03	2.03 (0.0799)	17	2.17 (0.0854)
90	1.90 (0.0748)	04	2.04 (0.0803)	18	2.18 (0.0858)
91	1.91 (0.0752)	05	2.05 (0.0807)	77	1.77 (0.0697)
92	1.92 (0.0756)	06	2.06 (0.0811)	78	1.78 (0.0701)
93	1.93 (0.0760)	07	2.07 (0.0815)	79	1.79 (0.0705)

Except 2JZ-GTE M/T

No.	Thickness mm (in.)	No.	Thickness mm (in.)	No.	Thickness mm (in.)
87	1.87 (0.0736)	01	2.01 (0.0791)	15	2.15 (0.0846)
88	1.88 (0.0740)	02	2.02 (0.0795)	16	2.16 (0.0850)
89	1.89 (0.0744)	03	2.03 (0.0799)	17	2.17 (0.0854)
90	1.90 (0.0748)	04	2.04 (0.0803)	18	2.18 (0.0858)
91	1.91 (0.0752)	05	2.05 (0.0807)	19	2.19 (0.0862)
92	1.92 (0.0756)	06	2.06 (0.0811)	20	2.20 (0.0866)
93	1.93 (0.0760)	07	2.07 (0.0815)	21	2.21 (0.0870)
94	1.94 (0.0764)	08	2.08 (0.0819)	22	2.22 (0.0874)
95	1.95 (0.0768)	09	2.09 (0.0823)	23	2.23 (0.0878)
96	1.96 (0.0772)	10	2.10 (0.0827)	24	2.24 (0.0882)
97	1.97 (0.0776)	11	2.11 (0.0831)	25	2.25 (0.0886)
98	1.98 (0.0780)	12	2.12 (0.0835)	26	2.26 (0.0890)
99	1.99 (0.0783)	13	2.13 (0.0839)	27	2.27 (0.0894)
00	2.00 (0.0787)	14	2.14 (0.0843)	28	2.28 (0.0898)

16. REMOVE DIFFERENTIAL RETAINER, DIFFERENTIAL CASE AND DRIVE PINION (See page SA-67)

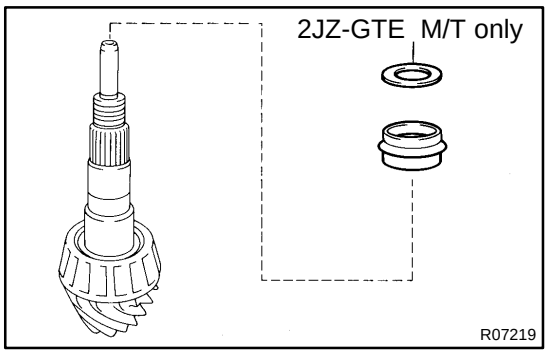

17. INSTALL SPACER AND OIL SLINGER (2JZ-GTE M/T) ON DRIVE PINION

Install a new spacer and the oil slinger (2JZ-GTE M/T) on the drive pinion.

18. POSITION DRIVE PINION IN DIFFERENTIAL CARRIER (See page SA-74)

19. INSTALL FRONT BEARING AND OIL SLINGER (EXCEPT 2JZ-GTE M/T) (See page SA-74)

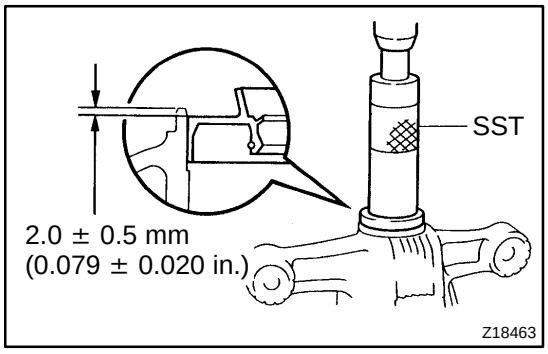

20. INSTALL OIL SEAL

(a) 2JZ-GTE M/T:

Using SST and press, install a new oil seal to the differential carrier.

SST 09316- 60011 (09316- 00011, 09316- 00071), 09502-24010

Oil seal drive in depth:
2.0 ± 0.5 mm (0.079 ± 0.020 in.)

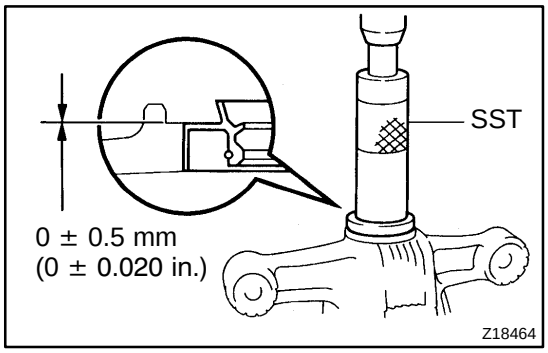

(b) Others:

Using SST and press, install a new oil seal to the differential carrier.

SST 09316- 60011 (09316- 00011, 09316- 00041), 09502-12010

Oil seal drive in depth:
0 ± 0.5 mm (0 ± 0.020 in.)

(c) Apply MP grease to a new oil seal lip.

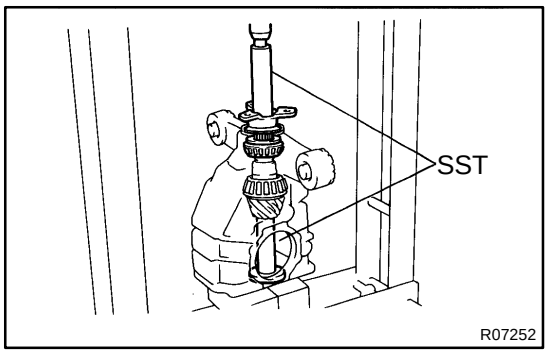

21. INSTALL COMPANION FLANGE

Using SST and a press, install the companion flange.

SST 09608-04031, 09608-06041

NOTICE:

★ **Be careful not to damage the oil seal.**

★ **Be careful not to press the bearing too far onto the drive pinion's bearing surface.**

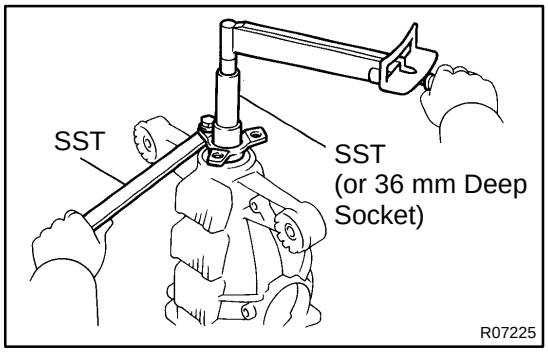

22. ADJUST DRIVE PINION PRELOAD

(a) Coat the drive pinion's threads and a new nut's flange with hypoid gear oil for LSD.

(b) Using SST (or a 36 mm deep socket wrench), tighten the nut.

SST 09229-55010 (Except 2JZ-GTE M/T), 09330-00021

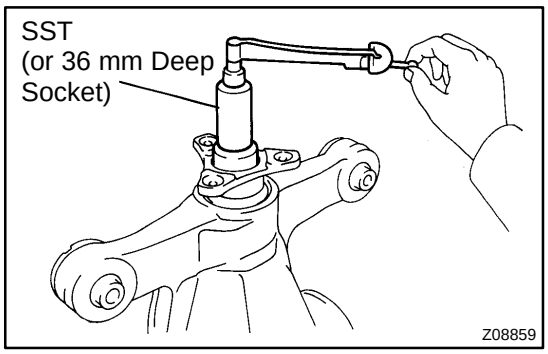

(c) Using SST (or a 36 mm deep socket) and a torque wrench, measure the preload.
SST 09229-55010

	New bearing preload (at starting)
2JZ-GTE M/T	2.0 - 2.5 N·m (20 - 25 kgf·cm, 17.3 - 21.7 in.·lbf)
Others	1.5 - 1.8 N·m (15 - 18 kgf·cm, 13.0 - 16.0 in.·lbf)

	Reused bearing preload (at starting)
2JZ-GTE M/T	1.0 - 1.2 N·m (10 - 12 kgf·cm, 8.9 - 10.6 in.·lbf)
Others	0.5 - 0.8 N·m (5 - 8 kgf·cm, 4.3 - 6.9 in.·lbf)

If the preload is greater than the specification, replace the spacer and repeat the preload procedure.

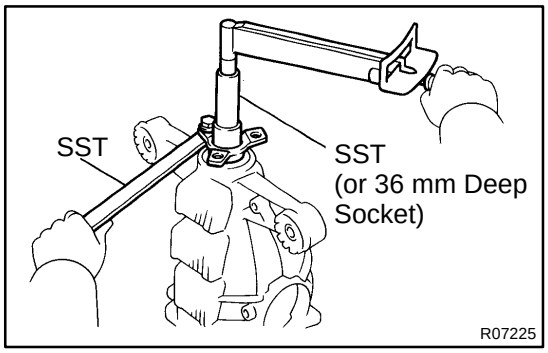

If the preload is less than the specification, retighten the nut 13 N·m (130 kgf·cm, 9 ft·lbf) at a time until the specified preload is reached.

	Maximum torque
2JZ-GTE M/T	510 N·m (5,200 kgf·cm, 376 ft·lbf)
Others	490 N·m (5,000 kgf·cm, 362 ft·lbf)

If the maximum torque is exceeded while retightening the nut, replace the spacer and repeat the preload procedure.
Do not back off the nut to reduce the preload.

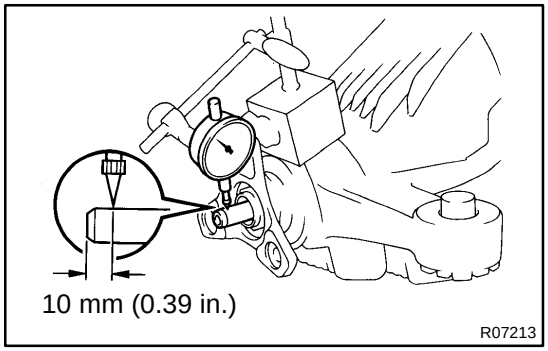

23. CHECK DRIVE PINION SHAFT RUNOUT

Measure the drive pinion shaft runout.

Maximum runout: 0.08 mm (0.0031 in.)

24. INSTALL DIFFERENTIAL CASE IN CARRIER (See page SA-74)

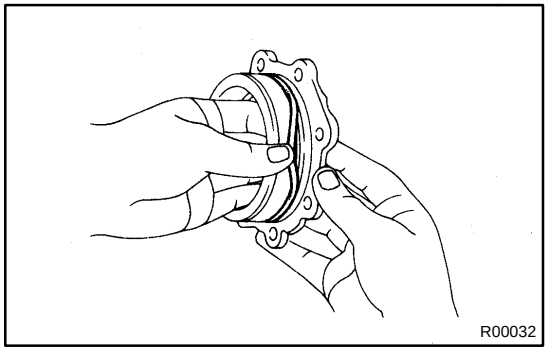

25. INSTALL O-RING

(a) Coat a new O-ring with hypoid gear oil.
(b) Install the O-ring to the carrier retainer.

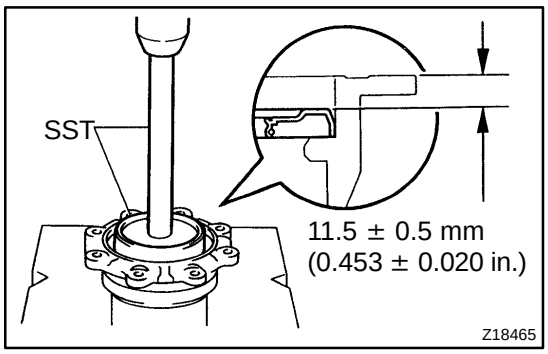

26. INSTALL OIL SEAL

(a) 2JZ-GTE M/T:
Using SST and a press, install a new oil seal to the carrier retainer.
SST 09223-15030, 09950-70010 (09951-07150)

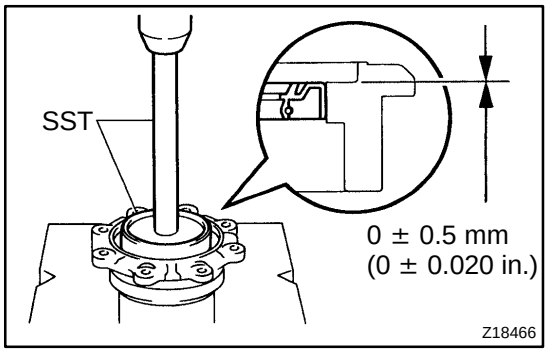

(b) Others:
Using SST and a press, install a new oil seal to the carrier retainer.
SST 09608-32010, 09950-70010 (09951-07150)

(c) Coat MP grease to the oil seal lip.

27. INSTALL SIDE BEARING RETAINER
(See page SA-74)

28. STAKE DRIVE PINION NUT

NOTICE:
Do not damage the drive pinion.

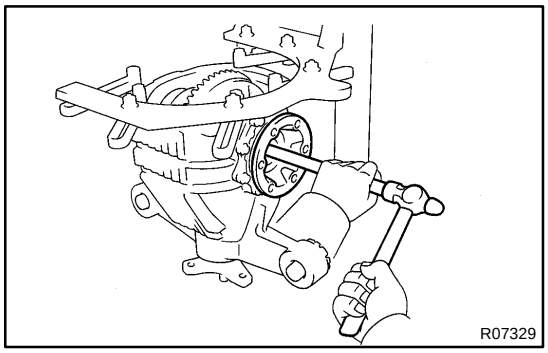

29. INSTALL BOTH GEAR SHAFTS

(a) Install a new snap ring to the shaft.

(b) Coat MP grease onto the snap ring.

(c) Using a brass bar and hammer, install both side gear shafts.

NOTICE:
Be careful not to damage the side gear shaft and the oil seal.

HINT:
Whether or not the side gear shaft is in contact with the pinion shaft can be known by the sound or feeling when driving it in.

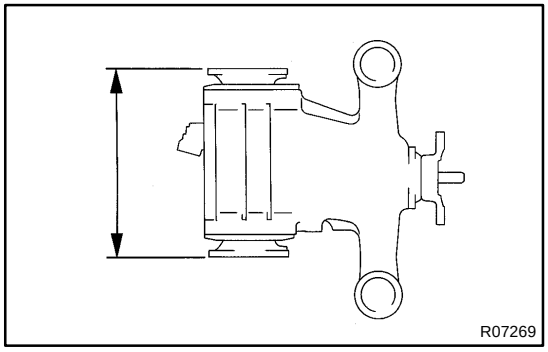

30. INSPECT DIFFERENTIAL CARRIER

Using vernier calipers, measure the distance between the mating surfaces of the 2 side gear shafts, as shown in the illustration.

	Standard distance
2JZ-GTE M/T	293.4 ± 0.65 mm (11.551 ± 0.026 in.)
Others	281.8 ± 0.95 mm (11.094 ± 0.037 in.)

31. RECHECK BACKLASH, TOTAL PRELOAD AND TOOTH CONTACT PATTERN (See page SA-74)

32. REMOVE DIFFERENTIAL CARRIER FROM OVERHAUL STAND, ETC.

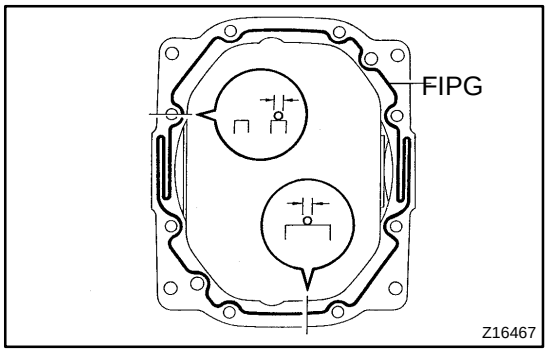

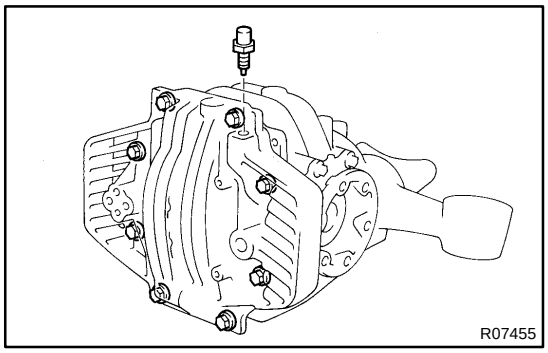

33. INSTALL DIFFERENTIAL CARRIER COVER

(a) Clean the contact surfaces of the carrier and cover of any residual FIPG material using cleaner.

(b) Coat FIPG to the carrier or cover.

FIPG:

Part No. 08826-00090, THREE BOND 1281 or equivalent

NOTICE:

After installing the cover, wait at least 1 hour before filling it with oil or running the vehicle.

(c) Install the carrier cover to the carrier with the 8 bolts.

	Torque
2JZ-GTE M/T	78 N·m (800 kgf·cm, 58 ft·lbf)
Others	47 N·m (475 kgf·cm, 34 ft·lbf)

(d) Install the breather plug.

Torque: 21 N·m (210 kgf·cm, 15 ft·lbf)

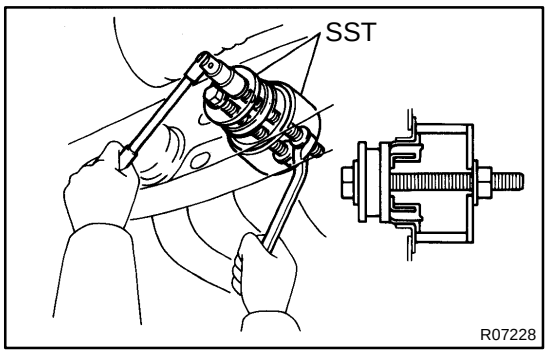

DIFFERENTIAL MOUNTING CUSHION

SA0Q3-01

REPLACEMENT

1. REMOVE DIFFERENTIAL ASSEMBLY
(See page SA-65)

2. REMOVE DIFFERENTIAL MOUNT CUSHION

Using SST, remove the differential mount cushion.
SST 09316-12010, 09570-24010

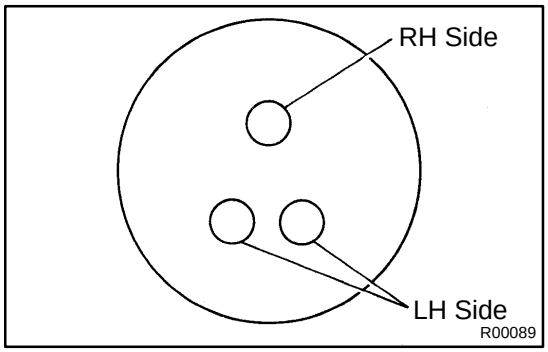

NOTICE:
When driving out the mount cushion, be careful not to touch the member with the SST. Align the SST straight so that the bolt of the SST is parallel with the center line of the mount cushion. When installing the bolts to the LH and RH differential mount cushions, make sure the bolts are passed through the correct holes in the SST, as shown in the illustration.

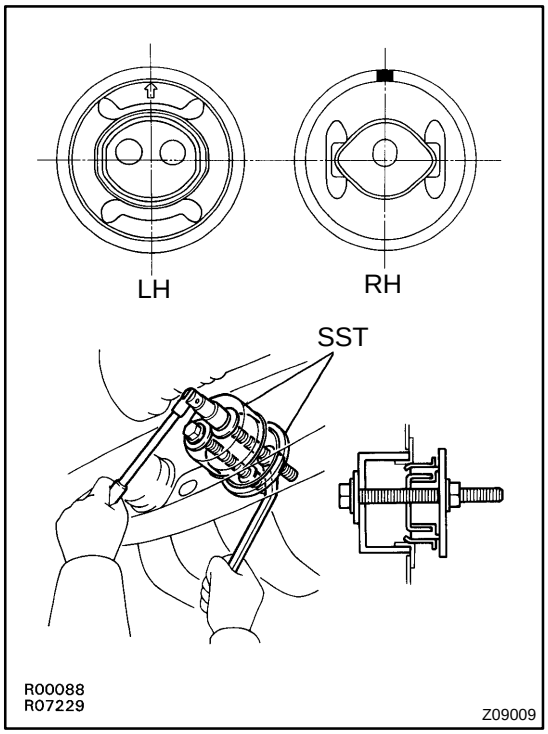

3. INSTALL DIFFERENTIAL MOUNT CUSHION

Using SST, install the cushion so that the marks are positioned, as shown in the illustration.
SST 09570-24010

NOTICE:
Do not make a mistake with left and right sides or top and bottom. Set the SST after temporarily installing the differential mount cushion into the member so as not to be installed at an angle. To confirm that the differential mount cushion is aligned straight in relation to the member, check that the SST is fully in contact with all of the cushion.

4. INSTALLATION DIFFERENTIAL ASSEMBLY
(See page SA-87)

REAR SHOCK ABSORBER

SA0Q4-02

COMPONENTS

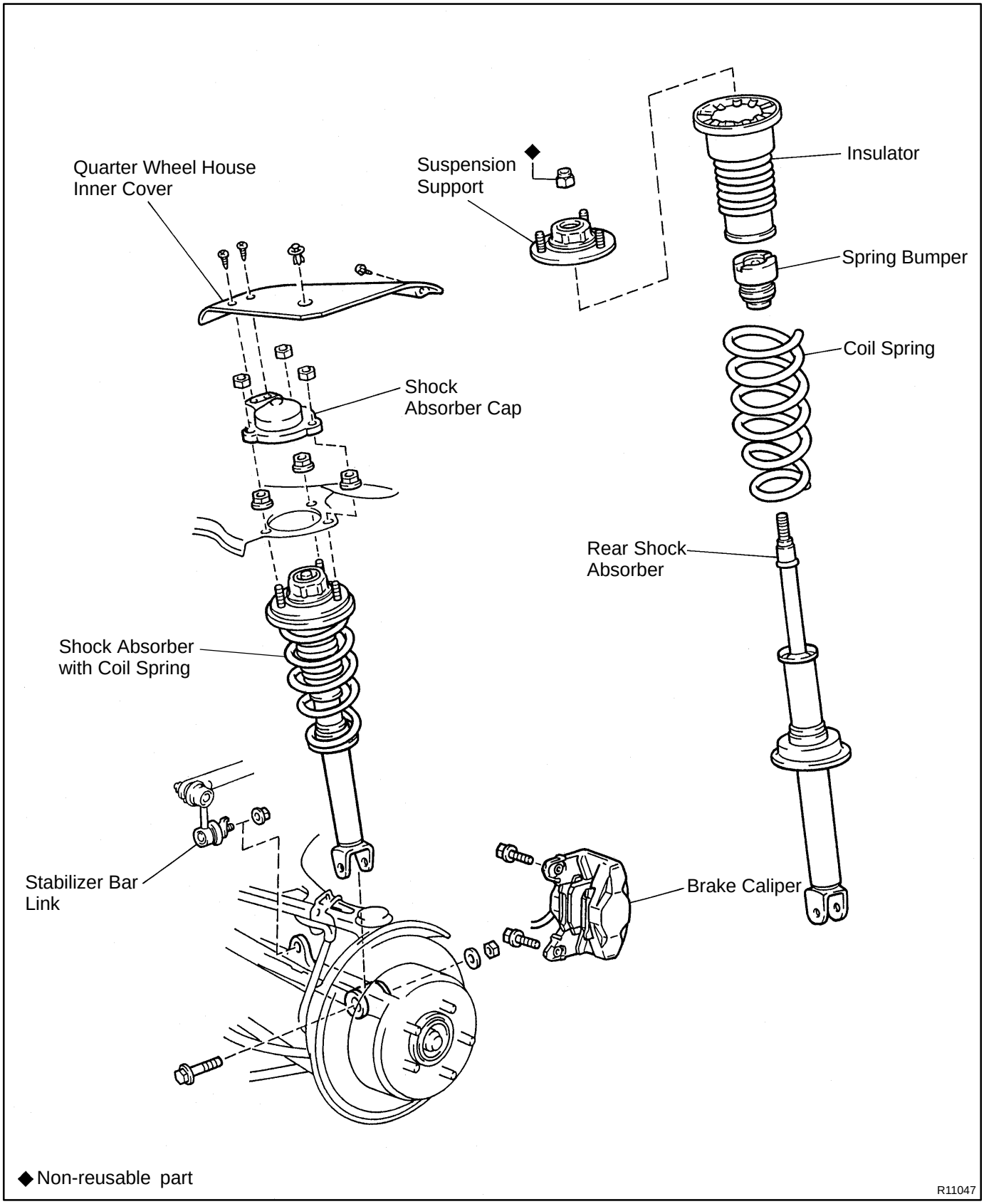

SA0Q5-01

REMOVAL

1. w/ SPORT ROOF:

REMOVE THESE PARTS:

(See page BO-38)

- ★ Rear seat cushion
- ★ Rear seatback
- ★ Tonneau cover retainer
- ★ Holder garnish and holder
- ★ Speaker grille
- ★ Quarter trim board

2. REMOVE REAR WHEEL

Torque: 103 N·m (1,050 kgf·cm, 76 ft·lbf)

3. REMOVE REAR BRAKE CALIPER

(a) Remove the 2 bolts and brake caliper from the rear axle carrier.

Torque: 104 N·m (1,065 kgf·cm, 77 ft·lbf)

(b) Support the brake caliper securely.

4. DISCONNECT REAR STABILIZER BAR LINK

Remove the nut and disconnect the stabilizer bar link from the lower suspension arm No.2.

Torque: 74 N·m (750 kgf·cm, 54 ft·lbf)

5. REMOVE SHOCK ABSORBER WITH COIL SPRING

(a) Remove the nut and bolt on lower side of the shock absorber.

Torque: 137 N·m (1,400 kgf·cm, 101 ft·lbf)

HINT:

At the time of installation, after stabilizing the suspension, torque the nut.

(b) Remove the quarter wheel house inner cover.

(c) Remove the 3 nuts and the shock absorber cap.

Torque: 10 N·m (105 kgf·cm, 8 ft·lbf)

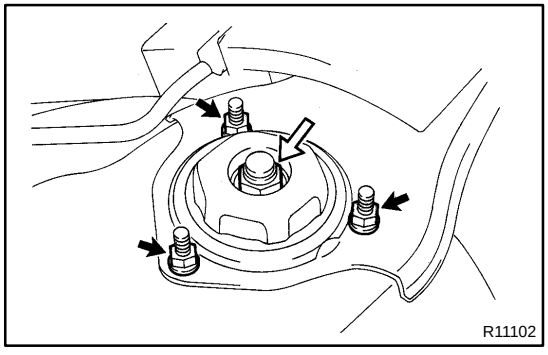

(d) Loosen the nut in the middle of the suspension support.

NOTICE:

Do not remove the nut.

Torque: 27 N·m (280 kgf·cm, 20 ft·lbf)

(e) Remove the 3 nuts and shock absorber with the coil spring.

Torque: 26 N·m (260 kgf·cm, 19 ft·lbf)

SA0Q6-01

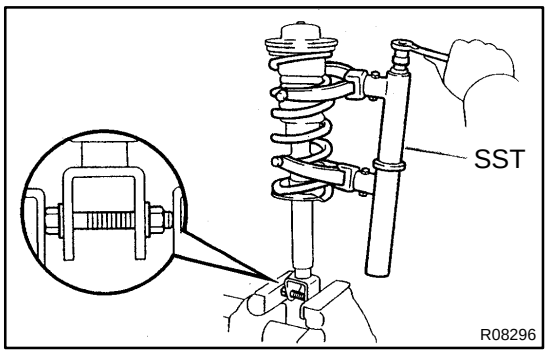

DISASSEMBLY

1. REMOVE SUSPENSION SUPPORT AND COIL SPRING

(a) Using SST, compress the coil spring.
SST 09727-30021

NOTICE:

Do not use an impact wrench. It will damage the SST.

(b) Remove the suspension support nut.

(c) Remove the suspension support, coil spring and insulator.

2. REMOVE SPRING BUMPER

SA0Q7-01

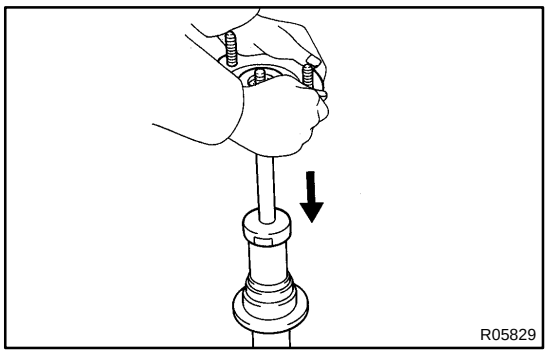

INSPECTION

INSPECT SHOCK ABSORBER

Compress and extend the shock absorber rod and check that there is no abnormal resistance or unusual operation sound.

If there is any abnormality, replace the shock absorber with a new one.

NOTICE:

When discarding the shock absorber, see DISPOSAL on page SA-93 .

SA0Q8-01

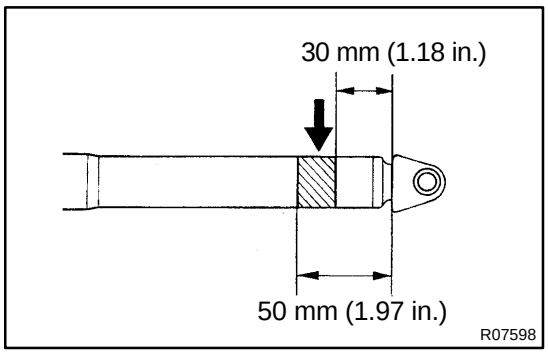

DISPOSAL

1. FULLY EXTEND SHOCK ABSORBER ROD

2. DRILL HOLE TO REMOVE GAS FROM CYLINDER

Using a drill, make a hole in the cylinder within the shaded region to remove the gas inside.

CAUTION:

The discharged gas is harmless, but be careful of chips which may fly up when drilling.

SA0Q9-01

REASSEMBLY

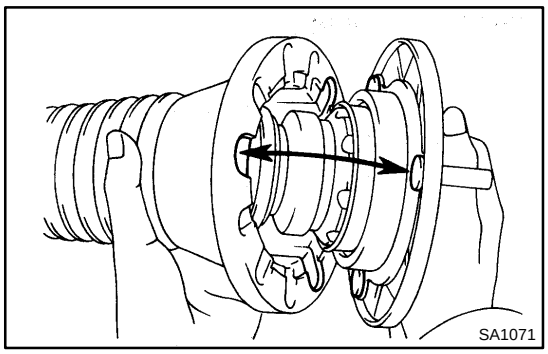

1. INSTALL SUSPENSION SUPPORT AND COIL SPRING

(a) Install the spring bumper to the suspension support.

(b) Install the insulator to the suspension support.

HINT:

Match the bolt of the suspension support with the cut-off part of the insulator.

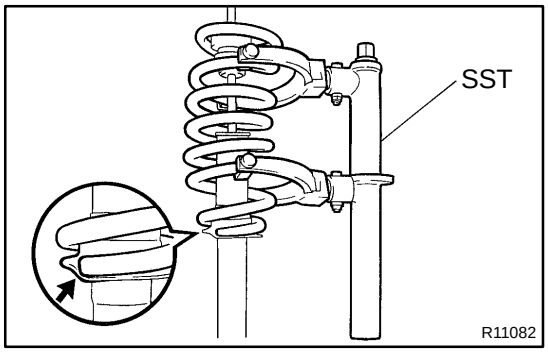

2. INSTALL COIL SPRING AND SUSPENSION SUPPORT

(a) Using SST, compress the coil spring.

SST 09727-30021

NOTICE:

Do not use an impact wrench. It will damage the SST.

(b) Install the coil spring to the shock absorber.

HINT:

Fit the lower end of the coil spring into the recess of the shock absorber's spring seat.

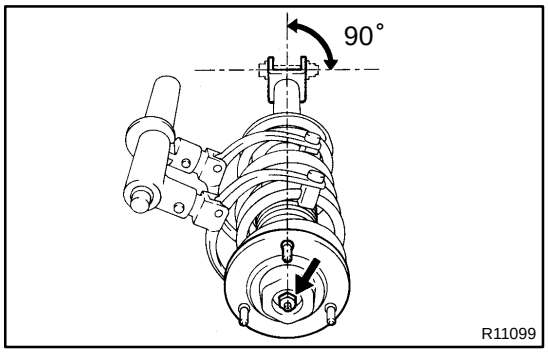

(c) Install the suspension support to the rod and temporarily tighten a new nut.

(d) Rotate the suspension support so that the rod and one of the bolts on suspension support are aligned with the lower bracket.

(e) Remove the SST.

SST 09727-30021

HINT:

After removing the SST, recheck the direction of the suspension support.

SA0QA-01

INSTALLATION

Installation is in the reverse order of removal (See page SA-90).
AFTER INSTALLATION, CHECK REAR WHEEL ALIGNMENT (See page SA-8)

REAR UPPER SUSPENSION ARM

SA0QB-02

COMPONENTS

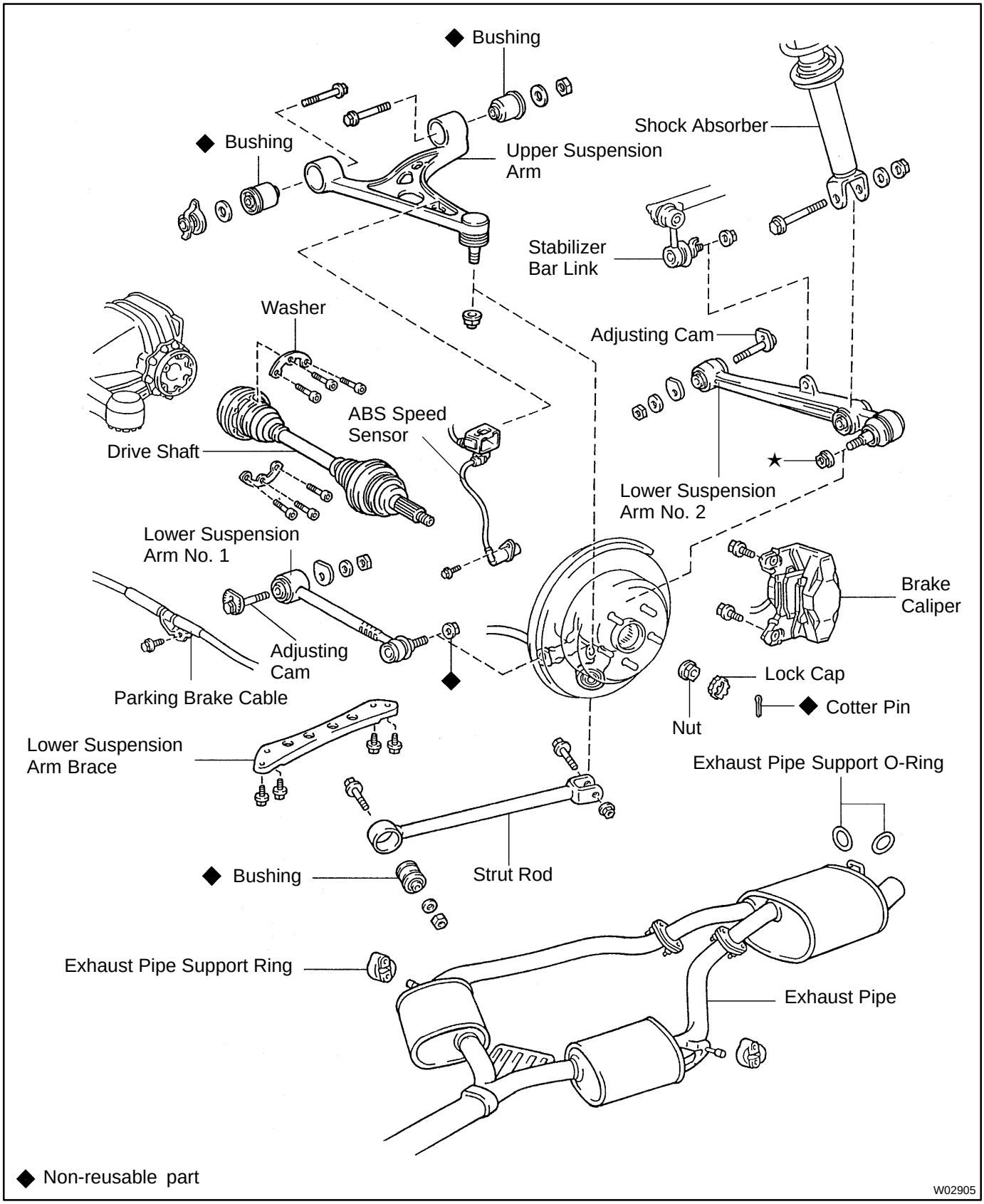

SA0QC-01

REMOVAL

1. REMOVE REAR WHEEL

Torque: 103 N·m (1,050 kgf·cm, 76 ft·lbf)

2. REMOVE DRIVE SHAFT (See page SA-51)

3. REMOVE BRAKE CALIPER

(a) Remove the 2 bolts and brake caliper from the rear axle carrier.

Torque: 104 N·m (1,065 kgf·cm, 77 ft·lbf)

(b) Support the brake caliper securely.

4. DISCONNECT ABS SPEED SENSOR AND WIRE HARNESS

(a) Remove the bolt and disconnect the speed sensor from the axle carrier.

Torque: 7.8 N·m (80 kgf·cm, 69 in.·lbf)

(b) Disconnect the speed sensor wire harness clamp from the upper suspension arm.

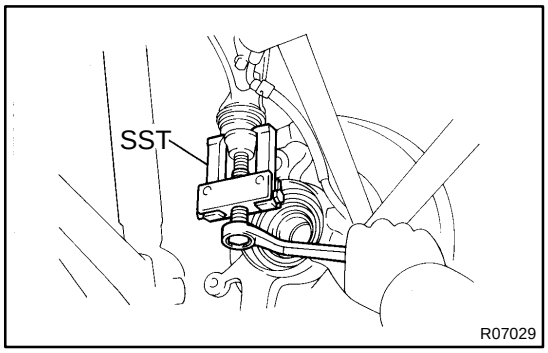

5. REMOVE UPPER SUSPENSION ARM

(a) Remove the nut from the upper suspension arm.

Torque: 108 N·m (1,100 kgf·cm, 80 ft·lbf)

(b) Using SST, disconnect the upper suspension arm from the axle carrier.

SST 09628-6201 1

NOTICE:

Be careful not to damage the dust cover.

(c) Remove the nuts, washers, bolts and upper suspension arm.

Torque: 164 N·m (1,670 kgf·cm, 121 ft·lbf)

HINT:

★ At the time of installation, after stabilizing the suspension, torque the bolt and nut.

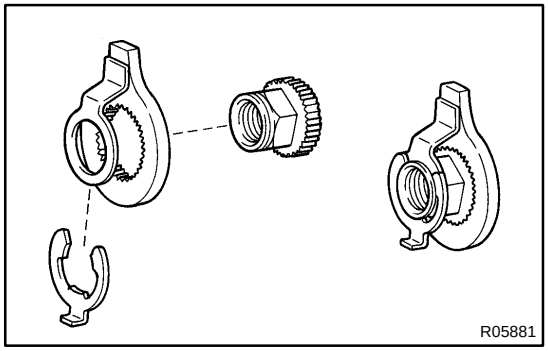

★ If replacing the front nut, assemble the nut and E-ring to the washer with lock protrusion before installing.

SA0QD-01

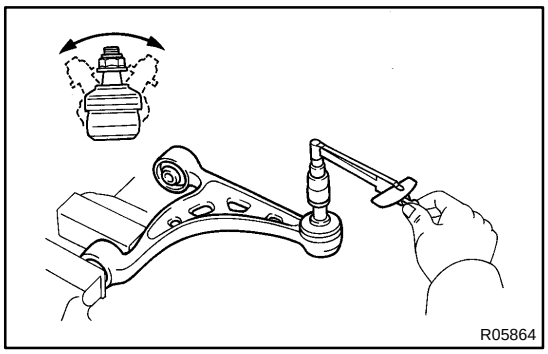

INSPECTION

INSPECT UPPER BALL JOINT FOR ROTATION CONDITION

(a) As shown in the illustration flip the ball joint stud back and forth 5 times, before installing the nut.

(b) Using torque wrench, turn the nut continuously one turn every 2 - 4 seconds and take the torque reading on the 5th turn.

Turning torque:

1.0 - 3.4 N·m (10 - 35 kgf·cm, 9 - 30 in.·lbf)

SA0QE-02

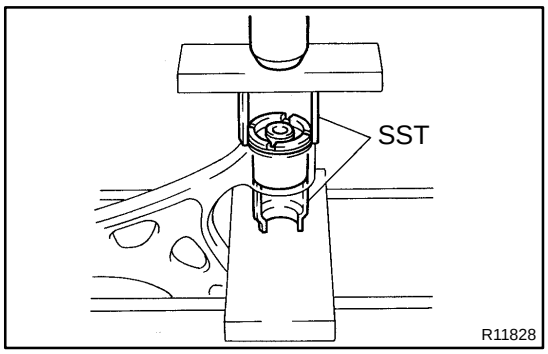

REPLACEMENT

1. REMOVE BUSHING

Using SST, remove the bushing.

SST 09710-26010 (09710-05070),
09710-30020 (09710-03030)

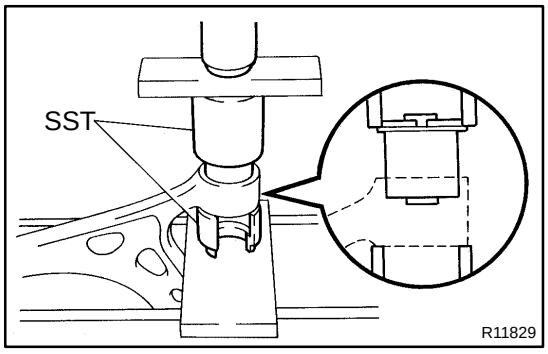

2. INSTALL NEW BUSHING

Using SST, install a new bushing.

SST 09710-26010 (09710-05050),
09710-30020 (09710-03120)

REAR LOWER SUSPENSION ARM AND STRUT ROD

SA0QG-02

COMPONENTS

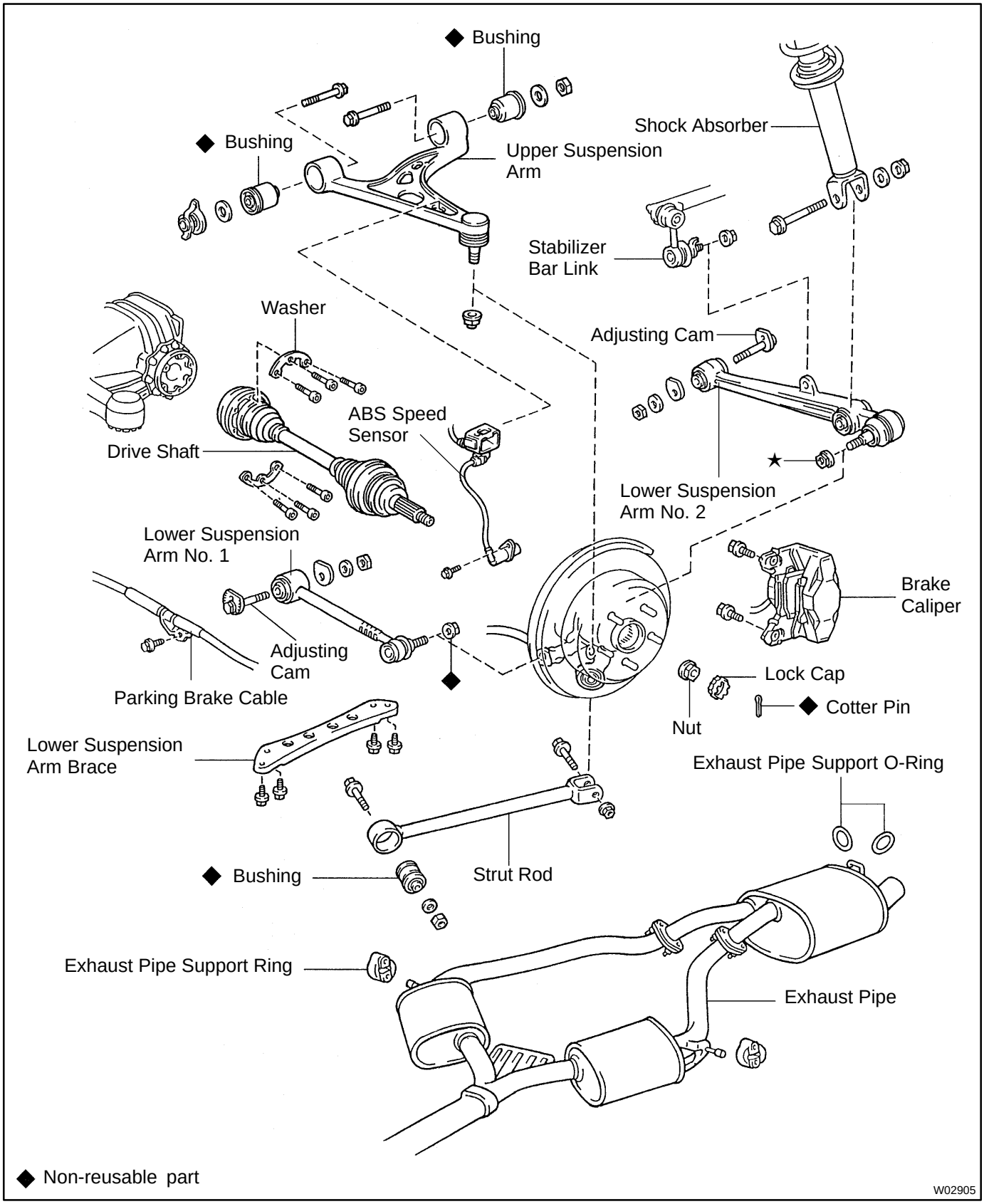

SA0QH-01

REMOVAL

1. REMOVE REAR WHEEL

Torque: 103 N·m (1,050 kgf·cm, 76 ft·lbf)

2. REMOVE REAR DRIVE SHAFT (See page SA-51)

3. REMOVE BRAKE CALIPER

(a) Remove the 2 bolts and brake caliper from the rear axle carrier.

Torque: 104 N·m (1,065 kgf·cm, 77 ft·lbf)

(b) Support the brake caliper securely.

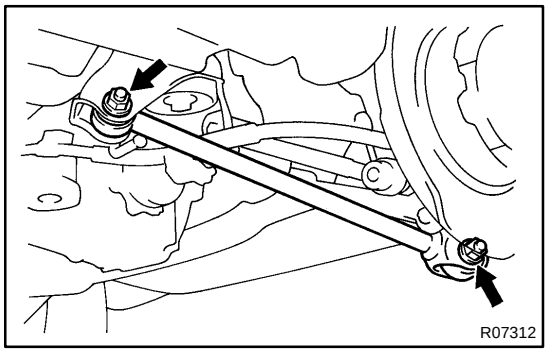

4. REMOVE STRUT ROD

Remove the 2 nuts, washer, bolts and strut rod.

Torque: 184 N·m (1,880 kgf·cm, 136 ft·lbf)

HINT:

At the time of installation, after stabilizing the suspension, torque the bolts.

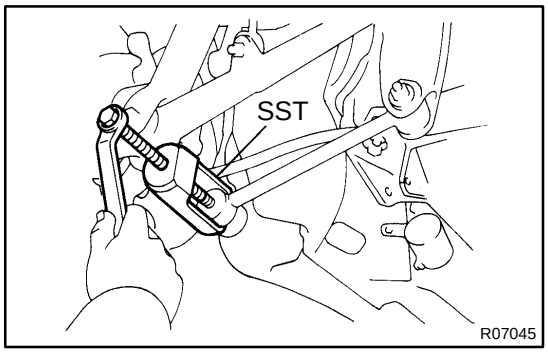

5. REMOVE LOWER SUSPENSION ARM NO.1

(a) Remove the nut.

Torque: 59 N·m (600 kgf·cm, 43 ft·lbf)

(b) Using SST, disconnect the lower suspension arm No.1 from the rear axle carrier.

SST 09610-20012

NOTICE:

Be careful not to damage the dust boot.

(c) Remove the bolt and disconnect the parking brake cable bracket.

Torque: 19 N·m (190 kgf·cm, 14 ft·lbf)

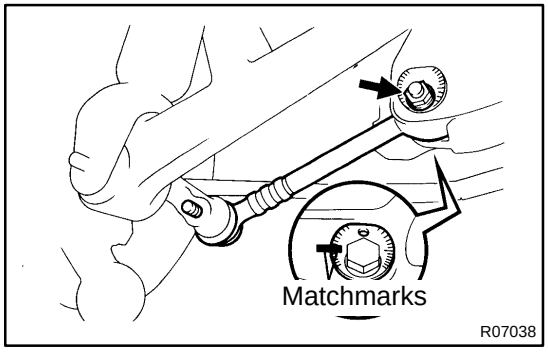

(d) Place matchmarks on the adjusting cam No.1 and sub-frame.

(e) Remove the nut, washer, adjusting cam plate No.1 and adjusting cam No.1.

Torque: 184 N·m (1,880 kgf·cm, 136 ft·lbf)

HINT:

At the time of installation, after stabilizing the suspension, torque the nut.

(f) Remove the lower suspension arm No.1.

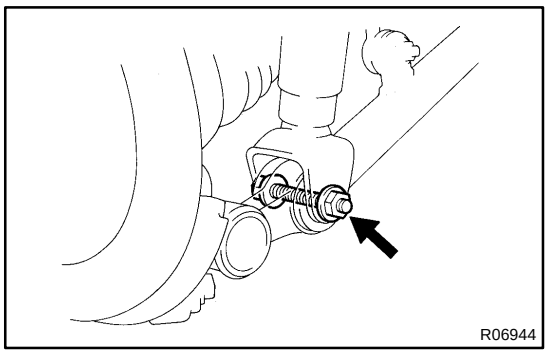

6. REMOVE LOWER SUSPENSION ARM NO.2

(a) Remove the nut, washer and bolt, then disconnect the shock absorber from the lower suspension arm No.2.
Torque: 137 N·m (1,400 kgf·cm, 101 ft·lbf)

HINT:
At the time of installation, after stabilizing the suspension, torque the nuts.

(b) Remove the nut and disconnect the stabilizer bar link from the lower suspension arm No.2.
Torque: 74 N·m (750 kgf·cm, 54 ft·lbf)

(c) Loosen the nut.
Torque: 150 N·m (1,525 kgf·cm, 110 ft·lbf)

(d) Using SST, disconnect the lower suspension arm No.2 from the rear axle carrier.
SST 09610-20012

NOTICE:
Be careful not to damage the ball joint bolt.

(e) Remove the nut.

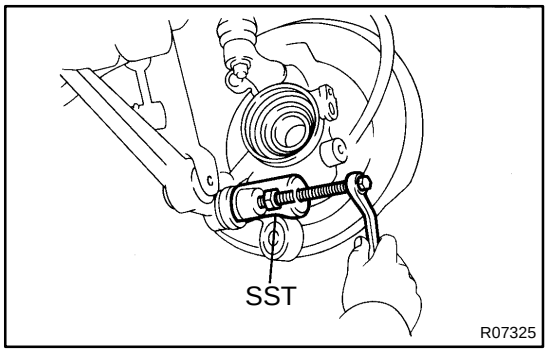

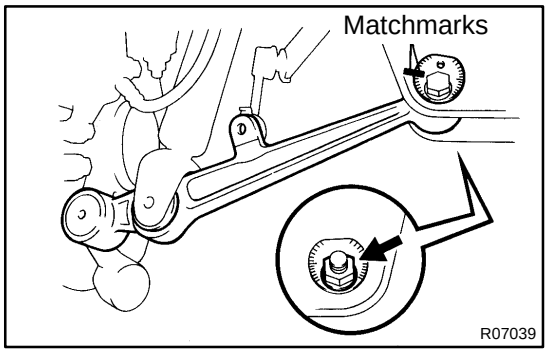

(f) Place matchmarks on the adjusting cam No.2 and sub-frame.

(g) Remove the nut, washer, adjusting cam palate No.2, adjusting cam No.2 and lower suspension arm No.2.
Torque: 184 N·m (1,880 kgf·cm, 136 ft·lbf)

HINT:
At the time of installation, after stabilizing the suspension, torque the nut.

SA0QI-01

INSPECTION

INSPECT LOWER BALL JOINT FOR ROTATION CONDITION

(a) As shown in the illustration, flip the ball joint stud back and forth 5 times, before installing the nut.

(b) Using a torque wrench, turn the nut continuously one turn every 2 - 4 seconds and take the torque reading on the 5th turn.

Turning torque:

Lower suspension arm No.1 and No.2:

1.0 - 3.4 N·m (10 - 35 kgf·cm, 9 - 30 in.·lbf)

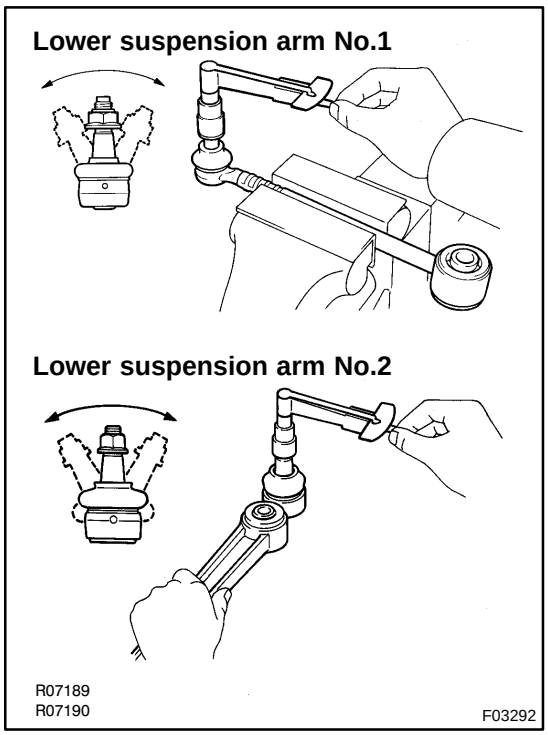

SA0QJ-01

REPLACEMENT

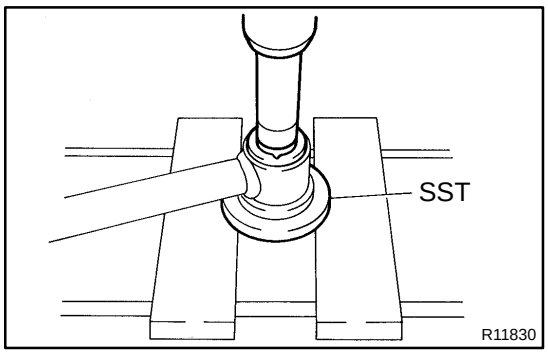

1. REMOVE BUSHING

Using SST and a deep socket wrench, remove the bushing.

SST 09506-35010

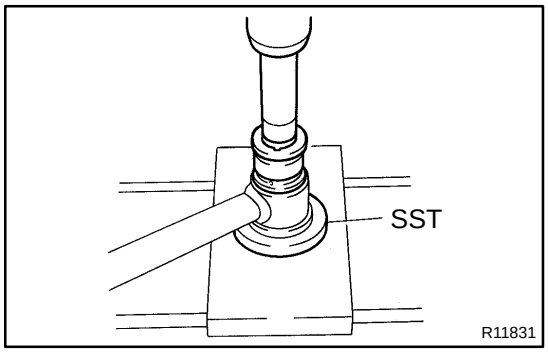

2. INSTALL NEW BUSHING

Using SST and a deep socket wrench, install a new bushing.

SST 09506-35010

HINT:

Do not apply grease or oil to the bushing.

REAR STABILIZER BAR

SA0QL-02

COMPONENTS

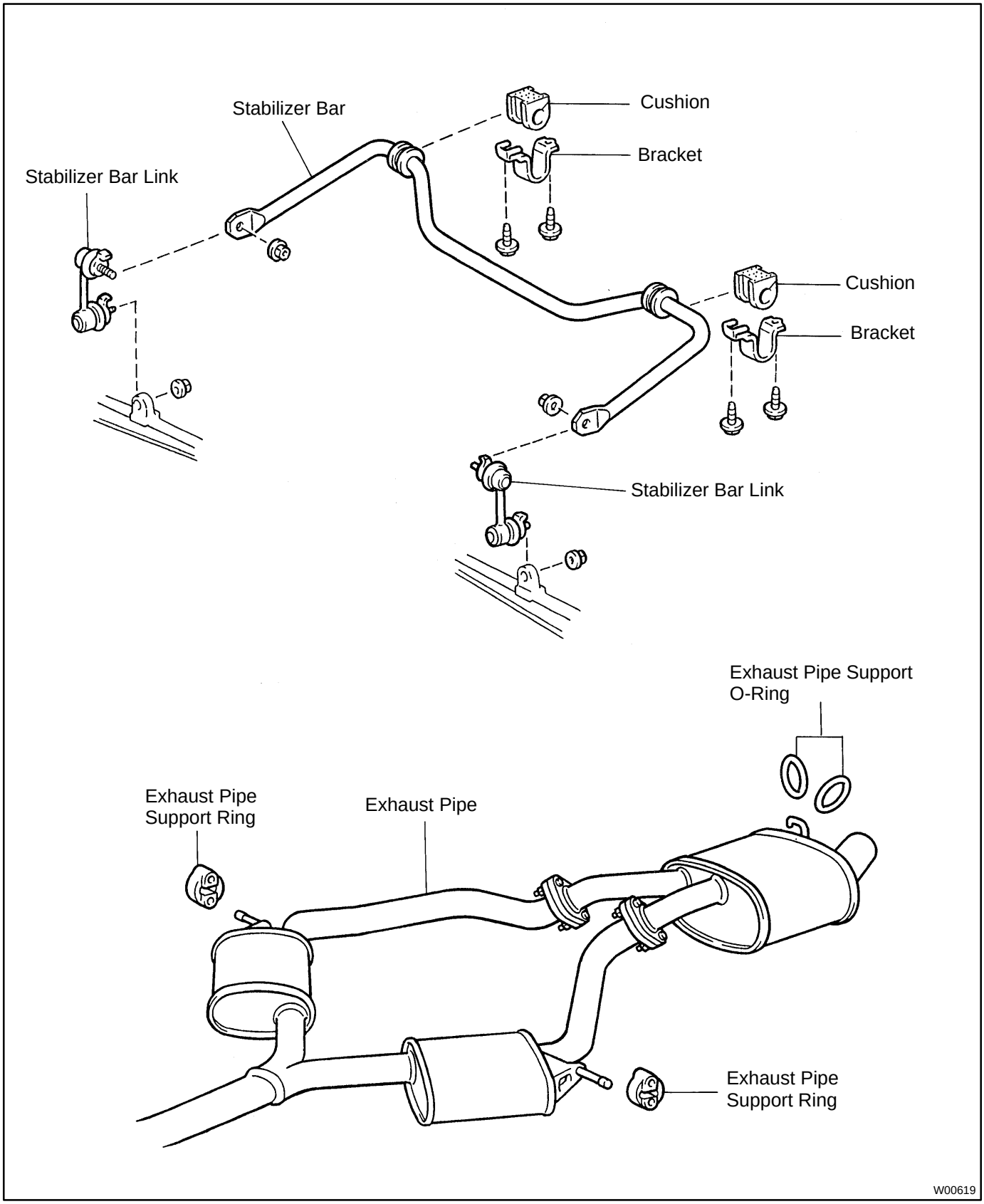

SA0QM-01

REMOVAL

1. DISCONNECT EXHAUST PIPE SUPPORTS
(See page SA-51)

2. REMOVE BOTH STABILIZER BAR LINKS

Remove the 4 nuts and 2 stabilizer bar links.

Torque: 74 N·m (750 kgf·cm, 54 ft·lbf)

3. REMOVE BOTH STABILIZER BAR BRACKETS

Remove the 4 bolts and both stabilizer bar brackets from the sub-frame.

Torque: 31 N·m (320 kgf·cm, 23 ft·lbf)

4. REMOVE BOTH CUSHIONS AND BRACKETS

Remove the 2 cushions and brackets from the stabilizer bar.

HINT:

At the time of installation, install the cushion to the outside of the bush stopper.

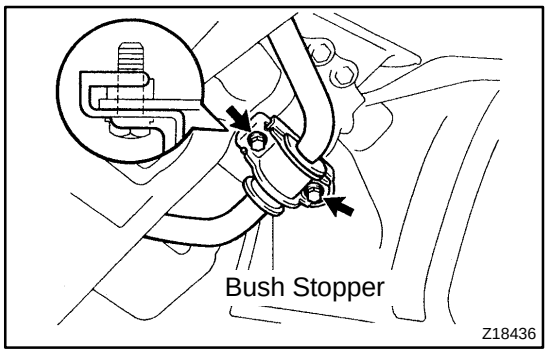

SA0QN-01

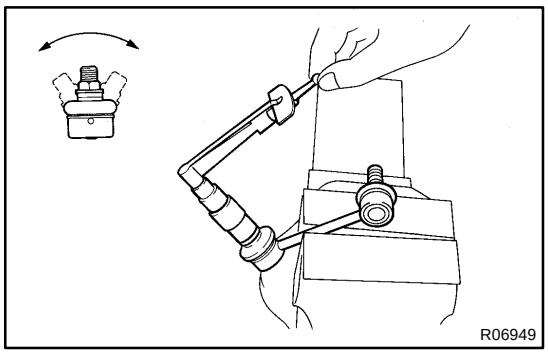

INSPECTION

INSPECT STABILIZER BAR LINK BALL JOINT FOR ROTATION CONDITION

(a) As shown in the illustration, flip the ball joint stud back and forth 5 times, before installing the nut.

(b) Using a torque wrench, turn the nut continuously taking 2 - 4 seconds per a turn and take the torque reading on the 5th turn.

Turning torque:
0.05 - 1.0 N·m (0.5 - 10 kgf·cm, 0.4 - 8.7 in.·lbf)

STANDARD BOLT

HOW TO DETERMINE BOLT STRENGTH

SS00F-01

	Mark	Class		Mark	Class
Hexagon head bolt	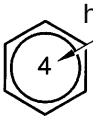 Bolt head No. 4- 5- 6- 7- 8- 9- 10- 11-	4T 5T 6T 7T 8T 9T 10T 11T	Hexagon flange bolt w/ washer hexagon bolt	 4 Protruding lines	9T
			Hexagon flange bolt w/ washer hexagon bolt	 5 Protruding lines	10T
	 No mark	4T	Hexagon flange bolt w/ washer hexagon bolt	 6 Protruding lines	11T
Hexagon flange bolt w/ washer hexagon bolt	 No mark	4T	Stud bolt	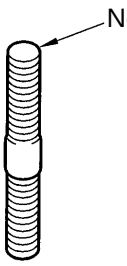 No mark	4T
Hexagon head bolt	 2 Protruding lines	5T			
Hexagon flange bolt w/ washer hexagon bolt	 2 Protruding lines	6T		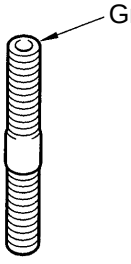 Grooved	6T
Hexagon head bolt	 3 Protruding lines	7T	Welded bolt	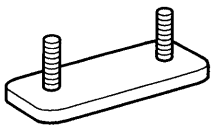	4T
Hexagon head bolt	 4 Protruding lines	8T			

V06821

SS00G-01

SPECIFIED TORQUE FOR STANDARD BOLTS

Class	Diameter mm	Pitch mm	Specified torque						
			Hexagon head bolt			Hexagon flange bolt			
			N·m	kgf·cm	ft·lbf	N·m	kgf·cm	ft·lbf	
4T	6	1	5	55	48 in.·lbf	6	60	52 in.·lbf	
	8	1.25	12.5	130	9	14	145	10	
	10	1.25	26	260	19	29	290	21	
	12	1.25	47	480	35	53	540	39	
	14	1.5	74	760	55	84	850	61	
	16	1.5	115	1,150	83	—	—	—	
5T	6	1	6.5	65	56 in.·lbf	7.5	75	65 in.·lbf	
	8	1.25	15.5	160	12	17.5	175	13	
	10	1.25	32	330	24	36	360	26	
	12	1.25	59	600	43	65	670	48	
	14	1.5	91	930	67	100	1,050	76	
	16	1.5	140	1,400	101	—	—	—	
6T	6	1	8	80	69 in.·lbf	9	90	78 in.·lbf	
	8	1.25	19	195	14	21	210	15	
	10	1.25	39	400	29	44	440	32	
	12	1.25	71	730	53	80	810	59	
	14	1.5	110	1,100	80	125	1,250	90	
	16	1.5	170	1,750	127	—	—	—	
7T	6	1	10.5	110	8	12	120	9	
	8	1.25	25	260	19	28	290	21	
	10	1.25	52	530	38	58	590	43	
	12	1.25	95	970	70	105	1,050	76	
	14	1.5	145	1,500	108	165	1,700	123	
	16	1.5	230	2,300	166	—	—	—	
8T	8	1.25	29	300	22	33	330	24	
	10	1.25	61	620	45	68	690	50	
	12	1.25	110	1,100	80	120	1,250	90	
9T	8	1.25	34	340	25	37	380	27	
	10	1.25	70	710	51	78	790	57	
	12	1.25	125	1,300	94	140	1,450	105	
10T	8	1.25	38	390	28	42	430	31	
	10	1.25	78	800	58	88	890	64	
	12	1.25	140	1,450	105	155	1,600	116	
11T	8	1.25	42	430	31	47	480	35	
	10	1.25	87	890	64	97	990	72	
	12	1.25	155	1,600	116	175	1,800	130	

V00079

MAINTENANCE

TORQUE SPECIFICATION

SS0DJ-01

Part tightened		N·m	kgf·cm	ft·lbf
Front seat x Body		37	375	27
Front suspension member x Body	Front side	125	1,280	92
	Rear side	200	2,040	148
Rear suspension member x Body		175	1,790	129
Rear suspension member rear cushion x Body		58	590	43

ENGINE MECHANICAL (2JZ-GE)

SS0DK-02

SERVICE DATA

Compression pressure		at 250 rpm STD	1,275 kPa (13.0 kgf/cm^2, 185 psi) or more
		Minimum	1,079 kPa (11.0 kgf/cm^2, 156 psi)
	Difference of pressure between each cylinder		98 kPa (1.0 kgf/cm^2, 14 psi) or less
Valve clearance		at cold Intake	0.15 - 0.25 mm (0.006 - 0.010 in.)
		Exhaust	0.25 - 0.35 mm (0.010 - 0.014 in.)
	Adjusting shim (for repair part)	Mark 2.500	2.500 mm (0.0984 in.)
		Mark 2.550	2.550 mm (0.1004 in.)
		Mark 2.600	2.600 mm (0.1024 in.)
		Mark 2.650	2.650 mm (0.1043 in.)
		Mark 2.700	2.700 mm (0.1063 in.)
		Mark 2.750	2.750 mm (0.1083 in.)
		Mark 2.800	2.800 mm (0.1102 in.)
		Mark 2.850	2.850 mm (0.1122 in.)
		Mark 2.900	2.900 mm (0.1142 in.)
		Mark 2.950	2.950 mm (0.1161 in.)
		Mark 3.000	3.000 mm (0.1181 in.)
		Mark 3.050	3.050 mm (0.1201 in.)
		Mark 3.100	3.100 mm (0.1220 in.)
		Mark 3.150	3.150 mm (0.1240 in.)
		Mark 3.200	3.200 mm (0.1260 in.)
		Mark 3.250	3.250 mm (0.1280 in.)
		Mark 3.300	3.300 mm (0.1299 in.)
Ignition timing	w/ Terminals TE1 and E1 connected of DLC1		10˚ BTDC @ idle
Idle speed			700 ± 50 rpm
Timing belt tensioner	Protrusion (from housing side)		8.0 - 8.8 mm (0.315 - 0.346 in.)
Cylinder head	Warpage		
	Cylinder block side	Maximum	0.10 mm (0.0039 in.)
	Intake manifold side	Maximum	0.10 mm (0.0039 in.)
	Exhaust manifold side	Maximum	0.10 mm (0.0039 in.)
	Valve guide bore diameter	STD	10.985 - 11.006 mm (0.4325 - 0.4333 in.)
		O/S 0.05	11.035 - 11.056 mm (0.4344 - 0.4353 in.)
	Valve seat		
	Refacing angle		15˚, 45˚, 75˚
	Contacting angle		45˚
	Contacting width	Intake	1.0 - 1.4 mm (0.039 - 0.055 in.)
		Exhaust	1.2 - 1.6 mm (0.047 - 0.063 in.)
	Cylinder head bolt diameter	STD	10.8 - 11.0 mm (0.425 - 0.433 in.)
		Minimum	10.7 mm (0.421 in.)
Valve guide bushing	Inside diameter		6.010 - 6.030 mm (0.2366 - 0.2374 in.)
	Outside diameter (for repair part)	STD	11.033 - 11.044 mm (0.4344 - 0.4348 in.)
		O/S 0.05	11.083 - 11.094 mm (0.4363 - 0.4368 in.)
Valve	Valve overall length	STD Intake	98.29 - 98.79 mm (3.8697 - 3.8894 in.)
		Exhaust	98.84 - 99.34 mm (3.8913 - 3.9110 in.)
		Minimum Intake	98.19 mm (3.8657 in.)
		Exhaust	98.74 mm (3.8874 in.)
	Valve face angle		44.5˚
	Stem diameter	Intake	5.970 - 5.985 mm (0.2350 - 0.2356 in.)
		Exhaust	5.965 - 5.980 mm (0.2348 - 0.2354 in.)

Valve (cont'd)	Stem oil clearance	STD Intake	0.025 - 0.060 mm (0.0010 - 0.0024 in.)
		Exhaust	0.030 - 0.065 mm (0.0012 - 0.0026 in.)
		Maximum Intake	0.08 mm (0.0031 in.)
		Exhaust	0.10 mm (0.0039 in.)
	Margin thickness	STD	0.8 - 1.2 mm (0.031 - 0.047 in.)
		Minimum	0.5 mm (0.020 in.)
Valve spring	Deviation	Maximum	2.0 mm (0.079 in.)
	Free length		41.70 mm (1.6417 in.)
	Installed tension at 34.5 mm (1.358 in.)		186.2 - 206.0 N (19.0 - 21.0 kgf, 42 - 46 lbf)
Valve lifter	Lifter diameter		30.966 - 30.976 mm (1.2191 - 1.2195 in.)
	Lifter bore diameter		31.000 - 31.016 mm (1.2205 - 1.2211 in.)
	Oil clearance	STD	0.024 - 0.050 mm (0.0009 - 0.0020 in.)
		Maximum	0.07 mm (0.0028 in.)
Camshaft	Thrust clearance	STD	0.080 - 0.190 mm (0.0031 - 0.0075 in.)
		Maximum	0.30 mm (0.0118 in.)
	Cam lobe height	STD Intake	44.570 - 44.670 mm (1.7547 - 1.7587 in.)
		Exhaust	44.770 - 44.870 mm (1.7626 - 1.7665 in.)
		Maximum Intake	44.42 mm (1.7488 in.)
		Exhaust	44.62 mm (1.7567 in.)
	Journal diameter		28.949 - 28.965 mm (1.1397 - 1.1404 in.)
	Journal oil clearance	STD	0.035 - 0.072 mm (0.0014 - 0.0028 in.)
		Maximum	0.10 mm (0.0039 in.)
	Circle runout	Maximum	0.08 mm (0.0031 in.)
Air intake chamber	Warpage	Maximum	0.15 mm (0.0059 in.)
Manifold	Warpage	Maximum Intake	0.15 mm (0.0059 in.)
		Exhaust	0.50 mm (0.0196 in.)
Cylinder block	Cylinder head surface warpage	Maximum	0.07 mm (0.0028 in.)
	Cylinder bore diameter	STD	86.000 - 86.013 mm (3.3858 - 3.3863 in.)
		Maximum	86.02 mm (3.3866 in.)
	Main bearing bolt diameter	STD	9.96 - 9.97 mm (0.3921 - 0.3925 in.)
		Minimum	9.7 mm (0.382 in.)
Connecting rod	Thrust clearance	STD	0.250 - 0.402 mm (0.0098 - 0.0158 in.)
		Maximum	0.50 mm (0.0197 in.)
	Connecting bolt diameter	STD	8.1 - 8.3 mm (0.319 - 0.327 in.)
		Minimum	8.0 mm (0.315 in.)
	Connecting rod oil clearance	STD STD	0.023 - 0.041 mm (0.0009 - 0.0016 in.)
		U/S 0.25	0.008 - 0.066 mm (0.0011 - 0.0026 in.)
		Maximum STD	0.07 mm (0.0027 in.)
		U/S 0.25	0.08 mm (0.0031 in.)
	Connecting rod bearing center wall thickness		
	(Reference)	STD Mark 1	1.498 - 1.501 mm (0.0590 - 0.0591 in.)
		Mark 2	1.501 - 1.504 mm (0.0591 - 0.0592 in.)
		Mark 3	1.504 - 1.507 mm (0.0592 - 0.0593 in.)
		Mark 4	1.507 - 1.510 mm (0.0593 - 0.0594 in.)
		Mark 5	1.510 - 1.513 mm (0.0594 - 0.0596 in.)
	Bushing inside diameter		22.005 - 22.014 mm (0.8663 - 0.8667 in.)
	Piston pin diameter		21.997 - 22.006 mm (0.8660 - 0.8664 in.)
	Piston pin oil clearance	STD	0.005 - 0.011 mm (0.0002 - 0.0004 in.)
		Maximum	0.05 mm (0.0020 in.)
	Rod bent	Maximum per 100 mm (3.94 in.)	0.05 mm (0.0020 in.)
	Rod twist	Maximum per 100 mm (3.94 in.)	0.15 mm (0.0059 in.)

Piston and Piston ring	Piston diameter		85.935 - 85.945 mm (3.3833 - 3.3837 in.)
	Piston oil clearance	STD	0.055 - 0.078 mm (0.0022 - 0.0031 in.)
		Maximum	0.10 mm (0.0039 in.)
	Piston ring groove clearance	No.1	0.011 - 0.070 mm (0.0004 - 0.0028 in.)
		No.2	0.030 - 0.070 mm (0.0012 - 0.0028 in.)
	Piston ring end gap	STD No.1	0.300 - 0.470 mm (0.0118 - 0.0185 in.)
		No.2	0.350 - 0.520 mm (0.0138 - 0.0205 in.)
		Oil	0.130 - 0.450 mm (0.0051 - 0.0177 in.)
		Maximum No.1	1.07 mm (0.0421 in.)
		No.2	1.12 mm (0.0441 in.)
		Oil	1.05 mm (0.0413 in.)
Crankshaft	Thrust clearance	STD	0.020 - 0.220 mm (0.0008 - 0.0087 in.)
		Maximum	0.30 mm (0.0118 in.)
	Thrust washer thickness	STD	1.940 - 1.990 mm (0.0764-0.0783 in.)
	Main journal oil clearance	STD STD	0.026 - 0.040 mm (0.0010-0.0016 in.)
		U/S 0.25	0.025 - 0.061 mm (0.0010-0.0024 in.)
		Maximum STD	0.06 mm (0.0024 in.)
		U/S 0.25	0.08 mm (0.0031 in.)
	Main journal diameter	STD	61.984 - 62.000 mm (2.4403 - 2.4409 in.)
		U/S 0.25	61.745 - 61.755 mm (2.4309 - 2.4313 in.)
	Main bearing center wall thickness (Reference)		
		Mark 1	1.994 - 1.997 mm (0.0785 - 0.0786 in.)
		Mark 2	1.997 - 2.000 mm (0.0786 - 0.0787 in.)
		Mark 3	2.000 - 2.003 mm (0.0787 - 0.0789 in.)
		Mark 4	2.003 - 2.006 mm (0.0789 - 0.0790 in.)
		Mark 5	2.006 - 2.009 mm (0.0790 - 0.0791 in.)
	Crank pin diameter	STD	51.982 - 52.000 mm (2.0465 - 2.0472 in.)
		U/S 0.25	51.745 - 51.755 mm (2.0372 - 2.0376 in.)
	Circle runout	Maximum	0.06 mm (0.0024 in.)
	Main journal taper and out-of-round	Maximum	0.02 mm (0.0008 in.)
	Crank pin taper and out-of-round	Maximum	0.02 mm (0.0008 in.)

SS0DL-02

TORQUE SPECIFICATION

Part tightened		N·m	kgf·cm	ft·lbf
Cylinder head cover x Cylinder head		8.3	85	74 in.·lbf
Timing belt plate x Oil pump		7.8	80	69in.·lbf
Idler pulley x Oil pump		34	350	25
Crankshaft pulley x Crankshaft		324	3,300	239
Camshaft timing pulley x Camshaft		79	810	59
Timing belt tensioner x Oil pump		26	270	20
PS pump front bracket x PS vane pump		58	590	43
PS pump front bracket x A/C compressor		52	530	38
PS pump pulley x PS vane pump		43	430	32
Drive belt tensioner x Cylinder head		21	210	15
EGR cooler x Cylinder head		8.8	90	78 in.·lbf
ECT sensor x Cylinder head		25	250	18
ECT sensor gauge x Cylinder head		15	150	11
Engine hanger x Cylinder head		39	400	29
Cylinder head x Cylinder block	1st 2nd 3rd	34 Turn 90° Turn 90°	350 Turn 90° Turn 90°	25 Turn 90° Turn 90°
Camshaft bearing cap x Cylinder head		20	200	14
No.4 timing belt cover x Cylinder head		7.8	80	69 in.·lbf
Intake manifold x Cylinder head		27	280	20
Fuel input pipe x Delivery pipe		42	420	30
Intake manifold stay x Intake manifold, Cylinder block		39	400	29
Water outlet x Cylinder head		21	210	15
Air intake chamber x Intake manifold		27	280	20
Vacuum control valve set x Intake manifold		21	210	15
No.2 vacuum pipe x Air intake chamber		27	280	20
No.2 vacuum pipe x Intake manifold		27	280	20
Air intake chamber stay x Cylinder head		18	185	13
Air intake chamber stay x Air intake chamber		18	185	13
PS pump rear stay x PS pump bracket		39	400	29
PS pump rear stay x Intake manifold stay		39	400	29
PS vane pump x PS pump bracket		58	590	43
Exhaust manifold x Cylinder head		39	400	29
Main bearing cap x Cylinder block	1st 2nd	44 Turn 90°	450 Turn 90°	33 Turn 90°
Connecting rod cap x Connecting rod	1st 2nd	29 Turn 90°	300 Turn 90°	22 Turn 90°
Rear oil seal retainer x Cylinder block		5.9	60	52 in.·lbf
Crankshaft position sensor x Cylinder block		8.8	90	78 in.·lbf
Engine mounting bracket x Cylinder block		58	590	43
Engine coolant drain plug x Cylinder block		29	300	22
Union nut x Cylinder block		55	550	41
Oil pressure switch x Cylinder block		14	150	11
Knock sensor x Cylinder block		44	450	33

Fuel pipe support x Cylinder block		28	290	21
Oil filter bracket x Cylinder block		88	900	65
No.2 water bypass pipe x Water pump, Cylinder block		21	210	15
Flywheel (M/T) x x Crankshaft	1st 2nd	49 Turn 90˚	500 Turn 90˚	36 Turn 90˚
Drive plate (A/T) x Crankshaft		83	850	61
Clutch cover x Flywheel	M/T	19	195	14
Cylinder block x Transmission	14 mm head 17 mm head	39 72	400 730	29 43
Drive plate x Torque converter clutch	A/T	33	340	25
Oil cooler tube x Union for transmission	A/T	34	350	25
Rear support member x Body		25	260	19
Rear support member x Engine rear mounting insulator		13	135	10
Front suspension crossmember x Engine mounting insulator		59	600	43
Transmission shift lever x Shift lever retainer	M/T	19	195	14
Transmission control rod x Shift lever	A/T	13	130	9
No.2 front exhaust pipe x Exhaust manifold		62	630	46
Pipe support bracket x Transmission		43	440	32
No.2 front exhaust pipe x Front exhaust pipe		58	590	43
Clutch release cylinder x Transmission	M/T	13	130	9
Ground strap (M/T) x Transmission		37	380	27
A/C compressor x Cylinder block	Stud bolt Bolt and nut	26 52	265 530	19 38
PS pump bracket x A/C compressor		58	590	43
PS pump bracket x Cylinder block		39	400	29
Fuel inlet hose x Fuel pipe support		29	300	22
Front exhaust pipe x Center exhaust pipe		58	590	43
Center exhaust pipe x Tailpipe		19	195	14
Heated oxygen sensor x Front exhaust pipe		20	200	14

ENGINE MECHANICAL (2JZ-GTE)

SS0DM-02

SERVICE DATA

Compression pressure		at 250 rpm STD	1,079 kPa (11.0 kgf/cm^2, 156 psi) or more
		Minimum	883 kPa (9.0 kgf/cm^2, 128 psi)
	Difference of pressure between each cylinder		98 kPa (1.0 kgf/cm^2, 14 psi) or less
Valve clearance		at cold Intake	0.15 - 0.25 mm (0.006 - 0.010 in.)
		Exhaust	0.25 - 0.35 mm (0.010 - 0.014 in.)
	Adjusting shim (for repair part)	Mark 2.500	2.500 mm (0.0984 in.)
		Mark 2.550	2.550 mm (0.1004 in.)
		Mark 2.600	2.600 mm (0.1024 in.)
		Mark 2.650	2.650 mm (0.1043 in.)
		Mark 2.700	2.700 mm (0.1063 in.)
		Mark 2.750	2.750 mm (0.1083 in.)
		Mark 2.800	2.800 mm (0.1102 in.)
		Mark 2.850	2.850 mm (0.1122 in.)
		Mark 2.900	2.900 mm (0.1142 in.)
		Mark 2.950	2.950 mm (0.1161 in.)
		Mark 3.000	3.000 mm (0.1181 in.)
		Mark 3.050	3.050 mm (0.1201 in.)
		Mark 3.100	3.100 mm (0.1220 in.)
		Mark 3.150	3.150 mm (0.1240 in.)
		Mark 3.200	3.200 mm (0.1260 in.)
		Mark 3.250	3.250 mm (0.1280 in.)
		Mark 3.300	3.300 mm (0.1299 in.)
Ignition timing	w/ Terminals TE1 and E1 connected of DLC1		10˚ BTDC @ idle
Idle speed			650 ± 50 rpm
Timing belt tensioner	Protrusion (from housing side)		8.0 - 8.8 mm (0.315 - 0.346 in.)
Cylinder head	Warpage		
	Cylinder block side	Maximum	0.10 mm (0.0039 in.)
	Intake manifold side	Maximum	0.10 mm (0.0039 in.)
	Exhaust manifold side	Maximum	0.10 mm (0.0039 in.)
	Valve guide bore diameter	STD	10.985 - 11.006 mm (0.4325 - 0.4333 in.)
		O/S 0.05	11.035 - 11.056 mm (0.4344 - 0.4353 in.)
	Valve seat		
	Refacing angle		15˚, 45˚, 75˚
	Contacting angle		45˚
	Contacting width	Intake	1.0 - 1.4 mm (0.039 - 0.055 in.)
		Exhaust	1.2 - 1.6 mm (0.047 - 0.063 in.)
	Cylinder head bolt diameter	STD	10.8 - 11.0 mm (0.425 - 0.433 in.)
		Minimum	10.7 mm (0.421 in.)
Valve guide bushing	Inside diameter		6.010 - 6.030 mm (0.2366 - 0.2374 in.)
	Outside diameter (for repair part)	STD	11.033 - 11.044 mm (0.4344 - 0.4348 in.)
		O/S 0.05	11.083 - 11.094 mm (0.4363 - 0.4368 in.)
Valve	Valve overall length	STD Intake	98.29 - 98.79 mm (3.8697 - 3.8894 in.)
		Exhaust	98.84 - 99.34 mm (3.8913 - 3.9110 in.)
		Minimum Intake	98.19 mm (3.8657 in.)
		Exhaust	98.74 mm (3.8874 in.)
	Valve face angle		44.5˚
	Stem diameter	Intake	5.970 - 5.985 mm (0.2350 - 0.2356 in.)
		Exhaust	5.965 - 5.980 mm (0.2348 - 0.2354 in.)

Valve (cont'd)	Stem oil clearance	STD Intake	0.025 - 0.060 mm (0.0010 - 0.0024 in.)
		Exhaust	0.030 - 0.065 mm (0.0012 - 0.0026 in.)
		Maximum Intake	0.08 mm (0.0031 in.)
		Exhaust	0.10 mm (0.0039 in.)
	Margin thickness	STD	0.8 - 1.2 mm (0.031 - 0.047 in.)
		Minimum	0.5 mm (0.020 in.)
Valve spring	Deviation	Maximum	2.0 mm (0.079 in.)
	Free length		41.70 mm (1.6417 in.)
	Installed tension at 34.5 mm (1.358 in.)		186 - 206 N (19.0 - 21.0 kgf, 42 - 46 lbf)
Valve lifter	Lifter diameter		30.966 - 30.976 mm (1.2191 - 1.2195 in.)
	Lifter bore diameter		31.000 - 31.016 mm (1.2205 - 1.2211 in.)
	Oil clearance	STD	0.024 - 0.050 mm (0.0009 - 0.0020 in.)
		Maximum	0.07 mm (0.0028 in.)
Camshaft	Thrust clearance	STD	0.080 - 0.190 mm (0.0031 - 0.0075 in.)
		Maximum	0.30 mm (0.0118 in.)
	Cam lobe height	STD Intake	44.570 - 44.670 mm (1.7547 - 1.7587 in.)
		Exhaust	44.770 - 44.870 mm (1.7626 - 1.7665 in.)
		Maximum Intake	44.42 mm (1.7488 in.)
		Exhaust	44.62 mm (1.7567 in.)
	Journal diameter		28.949 - 28.965 mm (1.1397 - 1.1404 in.)
	Journal oil clearance	STD	0.035 - 0.072 mm (0.0014 - 0.0028 in.)
		Maximum	0.10 mm (0.0039 in.)
	Circle runout	Maximum	0.08 mm (0.0031 in.)
Air intake chamber	Warpage	Maximum	0.15 mm (0.0059 in.)
Manifold	Warpage	Maximum Intake	0.15 mm (0.0059 in.)
		Exhaust	0.80 mm (0.0315 in.)
Cylinder block	Cylinder head surface warpage	Maximum	0.07 mm (0.0028 in.)
	Cylinder bore diameter	STD	86.000 - 86.013 mm (3.3858 - 3.3863 in.)
		Maximum	86.02 mm (3.3866 in.)
	Main bearing bolt diameter	STD	9.96 - 9.97 mm (0.3921 - 0.3925 in.)
		Minimum	9.7 mm (0.382 in.)
Connecting rod	Thrust clearance	STD	0.250 - 0.402 mm (0.0098 - 0.0158 in.)
		Maximum	0.50 mm (0.0197 in.)
	Connecting bolt diameter	STD	8.1 - 8.3 mm (0.319 - 0.327 in.)
		Minimum	8.0 mm (0.315 in.)
	Connecting rod oil clearance	STD STD	0.023 - 0.041 mm (0.0009 - 0.0016 in.)
		U/S 0.25	0.008 - 0.066 mm (0.0011 - 0.0026 in.)
		Maximum STD	0.07 mm (0.0027 in.)
		U/S 0.25	0.08 mm (0.0031 in.)
	Connecting rod bearing center wall thickness		
	(Reference)	STD Mark 1	1.498 - 1.501 mm (0.0590 - 0.0591 in.)
		Mark 2	1.501 - 1.504 mm (0.0591 - 0.0592 in.)
		Mark 3	1.504 - 1.507 mm (0.0592 - 0.0593 in.)
		Mark 4	1.507 - 1.510 mm (0.0593 - 0.0594 in.)
		Mark 5	1.510 - 1.513 mm (0.0594 - 0.0596 in.)
	Bushing inside diameter		22.005 - 22.014 mm (0.8663 - 0.8667 in.)
	Piston pin diameter		21.997 - 22.006 mm (0.8660 - 0.8664 in.)
	Piston pin oil clearance	STD	0.005 - 0.011 mm (0.0002 - 0.0004 in.)
		Maximum	0.05 mm (0.0020 in.)
	Rod bent	Maximum per 100 mm (3.94 in.)	0.05 mm (0.0020 in.)
	Rod twist	Maximum per 100 mm (3.94 in.)	0.15 mm (0.0059 in.)

Piston and Piston ring	Piston diameter		85.917 - 85.927 mm (3.3826 - 3.3830 in.)
	Piston oil clearance	STD	0.073 - 0.096 mm (0.0029 - 0.0038 in.)
		Maximum	0.12 mm (0.0047 in.)
	Piston ring groove clearance	No.1	0.040 - 0.080 mm (0.0016 - 0.0031 in.)
		No.2	0.030 - 0.070 mm (0.0012 - 0.0028 in.)
	Piston ring end gap	STD No.1	0.300 - 0.400 mm (0.0118 - 0.0157 in.)
		No.2	0.350 - 0.450 mm (0.0138 - 0.0178 in.)
		Oil	0.130 - 0.380 mm (0.0051 - 0.0150 in.)
		Maximum No.1	1.00 mm (0.0394 in.)
		No.2	1.05 mm (0.0413 in.)
		Oil	0.98 mm (0.0386 in.)
Crankshaft	Thrust clearance	STD	0.020 - 0.220 mm (0.0008 - 0.0087 in.)
		Maximum	0.30 mm (0.0118 in.)
	Thrust washer thickness	STD	1.940 - 1.990 mm (0.0764-0.0783 in.)
	Main journal oil clearance	STD STD	0.026 - 0.040 mm (0.0010-0.0016 in.)
		U/S 0.25	0.025 - 0.061 mm (0.0010-0.0024 in.)
		Maximum STD	0.06 mm (0.0024 in.)
		U/S 0.25	0.08 mm (0.0031 in.)
	Main journal diameter	STD	61.984 - 62.000 mm (2.4403 - 2.4409 in.)
		U/S 0.25	61.745 - 61.755 mm (2.4309 - 2.4313 in.)
	Main bearing center wall thickness (Reference)		
		Mark 1	1.994 - 1.997 mm (0.0785 - 0.0786 in.)
		Mark 2	1.997 - 2.000 mm (0.0786 - 0.0787 in.)
		Mark 3	2.000 - 2.003 mm (0.0787 - 0.0789 in.)
		Mark 4	2.003 - 2.006 mm (0.0789 - 0.0790 in.)
		Mark 5	2.006 - 2.009 mm (0.0790 - 0.0791 in.)
	Crank pin diameter	STD	51.982 - 52.000 mm (2.0465 - 2.0472 in.)
		U/S 0.25	51.745 - 51.755 mm (2.0372 - 2.0376 in.)
	Circle runout	Maximum	0.06 mm (0.0024 in.)
	Main journal taper and out-of-round	Maximum	0.02 mm (0.0008 in.)
	Crank pin taper and out-of-round	Maximum	0.02 mm (0.0008 in.)

SS0DN-02

TORQUE SPECIFICATION

Part tightened		N·m	kgf·cm	ft·lbf
Cylinder head cover x Cylinder head		5.4	55	48 in.·lbf
Timing belt plate x Oil pump		7.8	80	69in.·lbf
Idler pulley x Oil pump		34	350	25
Crankshaft pulley x Crankshaft		324	3,300	239
Camshaft timing pulley x Camshaft		79	810	59
Timing belt tensioner x Oil pump		26	270	20
PS pump front bracket (2JZ-GE) x PS vane pump		58	590	43
PS pump front bracket (2JZ-GE) x A/C compressor		52	530	38
PS pump pulley x PS vane pump		43	430	32
Drive belt tensioner x Cylinder head		21	210	15
Drive belt tensioner damper (M/T) x Tensioner arm		20	200	14
Drive belt tensioner damper (M/T) x Tensioner bracket		20	200	14
EGR cooler x Cylinder head		8.8	90	78 in.·lbf
Engine hanger x Cylinder head		39	400	29
Camshaft position sensor x Cylinder head		8.8	90	78 in.·lbf
Cylinder head x Cylinder block	1st 2nd 3rd	34 Turn 90° Turn 90°	350 Turn 90° Turn 90°	25 Turn 90° Turn 90°
Camshaft bearing cap x Cylinder head		20	200	14
No.4 timing belt cover x Cylinder head		7.8	80	69 in.·lbf
Intake manifold x Cylinder head		27	280	20
Fuel input pipe x Delivery pipe		42	420	30
Intake manifold stay x Intake manifold, Cylinder block		39	400	29
Water outlet x Cylinder head		21	210	15
Air intake chamber x Intake manifold		27	280	20
PS pump rear stay x PS pump bracket		39	400	29
PS vane pump x PS pump bracket		58	590	43
Exhaust manifold x Cylinder head		39	400	29
Pressure tank x Intake manifold		21	210	15
Main bearing cap x Cylinder block	1st 2nd	44 Turn 90°	450 Turn 90°	33 Turn 90°
Connecting rod cap x Connecting rod	1st 2nd	29 Turn 90°	300 Turn 90°	22 Turn 90°
Oil nozzle x Cylinder block		8.8	90	78 in.·lbf
Rear oil seal retainer x Cylinder block		5.9	60	52 in.·lbf
Crankshaft position sensor x Cylinder block		8.8	90	78 in.·lbf
Engine mounting bracket x Cylinder block		58	590	43
Engine coolant drain plug x Cylinder block		29	300	22
Union for oil cooler x Cylinder block		39	400	29
Union nut x Cylinder block		55	550	41
Oil pressure switch x Cylinder block		14	150	11
Knock sensor x Cylinder block		44	450	33
Fuel pipe support x Cylinder block		28	290	21
Oil filter bracket x Cylinder block		88	900	65

No.2 water bypass pipe x Water pump, Cylinder block		21	210	15
Flywheel (M/T) x x Crankshaft	1st	49	500	36
	2nd	Turn 90°	Turn 90°	Turn 90°
Drive plate (A/T) x Crankshaft		83	850	61
Clutch cover x Flywheel	M/T	19	195	14
Cylinder block x Transmission	14 mm head	39	400	29
	17 mm head	72	730	43
Clutch service hole cover x Clutch housing	2JZ-GTE M/T	12	120	9
Drive plate x Torque converter clutch	A/T	33	340	25
Oil cooler tube x Union for transmission	A/T	34	350	25
Rear support member x Body		25	260	19
Rear support member x Engine rear mounting insulator		13	135	10
Front suspension crossmember x Engine mounting insulator		59	600	43
Transmission shift lever x Shift lever retainer	M/T	19	195	14
Transmission control rod x Shift lever	A/T	13	130	9
No.2 front exhaust pipe x Exhaust manifold		62	630	46
Pipe support bracket x Transmission		43	440	32
No.2 front exhaust pipe x Front exhaust pipe		58	590	43
Clutch release cylinder x Transmission	M/T	13	130	9
Clutch line tube (M/T) x No.1 oil pan		37	380	27
Ground strap (M/T) x Transmission		37	380	27
A/C compressor x Cylinder block	Stud bolt	26	265	19
	Bolt and nut	52	530	38
PS pump bracket x A/C compressor		58	590	43
PS pump bracket x Cylinder block		39	400	29
Fuel inlet hose x Fuel pipe support		29	300	22
Rear center floor crossmember brace x Body		28	290	21
Front exhaust pipe x Center exhaust pipe		58	590	43
Center exhaust pipe x Tailpipe		19	195	14
Heated oxygen sensor x Front exhaust pipe		20	200	14

TURBOCHARGING (2JZ-GTE)

SS0DO-02

SERVICE DATA

Turbocharger	Turbocharging pressure		61 - 75 kPa (0.62 - 0.76 kgf/cm^2, 8.8 - 10.8 psi)
	Impeller wheel axial play	Maximum	0.162 mm (0.0064 in.)
	Impeller wheel radial play	Maximum	0.110 mm (0.0045 in.)

SS0DP-02

TORQUE SPECIFICATION

Part tightened		N·m	kgf·cm	ft·lbf
Front lower arm bracket stay x Front suspension	Bolt	44	450	33
	Nut	59	600	43
Upper front crossmember extension x Front suspension	Bolt	29	300	22
	Nut	33	340	25
Front exhaust pipe x No.2 front exhaust pipe		58	590	43
Pipe support bracket x Transmission		43	440	32
No.2 front exhaust pipe x Exhaust gas control valve		62	630	46
No.1 air tube x No.1 turbocharger		21	210	15
No.4 air tube x No.1 turbocharger		21	210	15
Intake air control valve x No.2 turbocharger		21	210	15
Exhaust bypass pipe x Exhaust gas control valve		25	250	18
Exhaust bypass pipe x Turbine outlet elbow		25	250	18
Exhaust gas control valve stay x Cylinder block		43	440	32
Exhaust gas control valve stay x Exhaust gas control valve		43	440	32
Main heated oxygen sensor x Exhaust gas control valve		20	200	14
Exhaust gas control valve x Turbine outlet elbow		69	700	51
Turbocharger stay x Cylinder block		43	440	32
Turbocharger stay x Turbocharger		43	440	32
Turbo oil pipe x Cylinder block		39	400	29
Turbo oil pipe x Turbocharger		21	210	15
Turbocharger x Exhaust manifold		54	550	40
No.2 air tube x No.2 turbocharger		21	210	15
Side bearing housing plate x Turbocharger		8.8	90	78 in.·lbf
Turbo water pipe x Turbocharger		8.8	90	78 in.·lbf
Turbocharger x Turbine outlet elbow		25	250	18
CAC duct x CAC		4.9	50	43 in.·lbf
CAC x Body		13	135	10

EMISSION CONTROL (2JZ-GTE)

SS0DQ-03

TORQUE SPECIFICATION

Part tightened	N·m	kgf·cm	ft·lbf
EGR valve x Air Intake chamber	21	210	15
EGR gas temperature sensor x EGR valve	20	200	14
EGR pipe x Cylinder head	27	280	20
EGR valve x EGR pipe	64	650	47
No.2 front exhaust pipe (Front TWC) x Exhaust manifold	62	630	46
Pipe support bracket x Transmission	43	440	32
No.2 front exhaust pipe (Front TWC) x Front exhaust pipe (Rear TWC)	43	440	32
Front exhaust pipe (Rear TWC) x Center exhaust pipe	43	440	32
Heated oxygen sensor x Front exhaust pipe	20	200	14

SFI (2JZ-GTE)

SS0DU-02

SERVICE DATA

Fuel pressure regulator	Fuel pressure	at no vacuum	226 - 275 kPa (2.3 - 2.8 kgf/cm^2, 33 - 40 psi)
Fuel pump	Resistance	at 20˚C (68˚F)	0.1 - 3.0 Ω
Injector	Resistance	at 20˚C (68˚F)	Approx. 1.95 Ω
	Injection volume		111 - 141 cm^3 (6.8 - 8.6 cu in.) per 15 sec.
	Difference between each cylinder		10 cm^3 (0.6 cu in.) or less
	Fuel leakage		One drop or less per minutes
MAF meter	Resistance (THA - E2)	at -20˚C (-4˚F)	10 - 20 kΩ
		at 0˚C (32˚F)	4 - 7 kΩ
		at 20˚C (68˚F)	2 - 3 kΩ
		at 40˚C (104˚F)	0.9 - 1.3 kΩ
		at 60˚C (140˚F)	0.4 - 0.7 kΩ
Throttle body	Throttle body fully closed angle		10˚
	Dashpot setting speed		2,300 ± 400 rpm
	Throttle opener setting speed		1,500 ± 200 rpm
Throttle position sensor	Clearance between stop screw and lever		
	0 mm (0 in.)	VTA - E2	0.34 - 6.3 kΩ
	0.54 mm (0.021 in.)	IDL - E2	0.5 kΩ or less
	0.70 mm (0.028 in.)	IDL - E2	Infinity
	Throttle valve fully open	VTA - E2	2.4 - 11.2 kΩ
	-	VC - E2	3.1 - 7.2 kΩ
Sub-throttle position sensor	Clearance between stop screw and lever		
	0 mm (0 in.)	VTA - E2	0.3 - 6.3 kΩ
	0.41 mm (0.016 in.)	IDL - E2	0.5 kΩ or less
	0.48 mm (0.019 in.)	IDL - E2	Infinity
	Throttle valve fully open	VTA - E2	2.0 - 10.8 kΩ
	-	VC - E2	3.5 - 6.5 kΩ
Sub-throttle actuator	Resistance (A and A-, B and B-)	at 20˚C (68˚F)	0.82 - 0.98 Ω
IAC valve	Resistance (B1 (or B2) - Others)	at cold	15 - 25 Ω
		at hot	20 - 30 Ω
Solenoid resistor	Resistance (+B - Others)	at 20˚C (68˚F)	Approx. 6 Ω
VSV for fuel pressure control	Resistance	at 20˚C (68˚F)	33 - 39 Ω
VSV for intake air control valve	Resistance	at 20˚C (68˚F)	38.5 - 44.5 Ω
VSV for exhaust bypass valve	Resistance	at 20˚C (68˚F)	22 - 26 Ω
VSV for waste gate valve	Resistance	at 20˚C (68˚F)	22 - 26 Ω
VSV for exhaust gas control valve	Resistance	at 20˚C (68˚F)	38.5 - 44.5 Ω
VSV for EVAP	Resistance	at 20˚C (68˚F)	30 - 34 Ω
EGR gas temperature sensor	Resistance	at 50˚C (122˚F)	64 - 97 kΩ
		at 100˚C (212˚F)	11 - 16 kΩ
		at 150˚C (302˚F)	2 - 4 kΩ

ECT sensor	Resistance	at -20˚C (-4˚F)	10 - 20 kΩ
		at 0˚C (32˚F)	4 - 7 kΩ
		at 20˚C (68˚F)	2 - 3 kΩ
		at 40˚C (104˚F)	0.9 - 1.3 kΩ
		at 60˚C (140˚F)	0.4 - 0.7 kΩ
		at 80˚C (176˚F)	0.2 - 0.4 kΩ
VSV for EGR	Resistance	at 20˚C (68˚F)	30 - 34 Ω
Heated oxygen sensor	Heater coil resistance	at 20˚C (68˚F)	11 - 16 Ω
Fuel cut rpm	Fuel return rpm		1,400 rpm

SS0DV-02

TORQUE SPECIFICATION

Part tightened		N·m	kgf·cm	ft·lbf
Fuel line	for union bolt	29	300	22
	for flare nut	30	310	22
Fuel pressure regulator x Delivery pipe		8.8	90	78 in.·lbf
Fuel return pipe x Fuel pressure regulator		27	280	20
Delivery pipe x Intake manifold		21	210	15
Injector holder x Delivery pipe		7.8	80	69 in.·lbf
Fuel inlet pipe x Delivery pipe		41	420	30
Air intake chamber x Intake manifold		27	280	20
Manifold stay x Air intake chamber		39	400	29
Manifold stay x Cylinder head		39	400	29
EGR pipe x Cylinder head		27	280	20
EGR pipe x EGR valve		64	650	47
Control cable bracket x Air intake chamber		19	195	14
Air intake chamber stay x Intake manifold		19	195	14
Air intake chamber stay x Control cable bracket		19	195	14
Fuel pressure pulsation damper x Fuel pipe support		41	420	30
	for SST	35	350	25
Fuel tank band x Body		39	400	29
MAF meter x Air cleaner case		6.9	70	61 in.·lbf
Throttle body x Air intake chamber		21	210	15
IAC valve x Air intake chamber		21	210	15
EGR gas temperature sensor x EGR valve		20	200	14
Knock sensor x Cylinder block		44	450	33
Main heated oxygen sensor x Exhaust manifold		20	200	14
Sub heated oxygen sensor x Center exhaust pipe		20	200	14
Upper front crossmember extension x Front suspension	Bolt	29	300	22
	Nut	33	340	25
Front lower arm bracket stay x Front suspension	Bolt	44	450	33
	Nut	59	600	43

COOLING

SERVICE DATA

SS0DW-01

Thermostat	Valve opening temperature Valve lift at 95˚C (203˚F)	80 - 84˚C (176 - 183˚F) 8.5 mm (0.335 in.) or more
Radiator cap	Relief valve opening pressure STD Minimum	93 - 123 kPa (0.95 - 1.25 kgf/cm^2, 13.5 - 17.8 psi) 78 kPa (0.8 kgf/cm^2, 11.4 psi)
Electric cooling fan	Rotating amperage	2.5 - 4.5 A

SS0DX-02

TORQUE SPECIFICATION

Part tightened		N·m	kgf·cm	ft·lbf
Engine drain plug x Cylinder block		29	300	22
Fan x Fluid coupling		7.4	75	65 in.·lbf
Water pump x Cylinder block		21	210	15
Water pump x No.2 water bypass pipe		21	210	15
Generator x Water pump		37	380	27
Generator x Cylinder block		37	380	27
Water bypass outlet (2JZ-GE) x Cylinder head		8.8	90	78 in.·lbf
Water outlet (2JZ-GTE) x Cylinder head		21	210	15
Fluid coupling assembly x Water pump pulley		16	165	12
Water inlet x Water pump	2JZ-GE	8.8	90	78 in.·lbf
	2JZ-GTE	21	210	15
Upper radiator support x Body		15	155	11
Oil cooler x Radiator lower tank	A/T	8.3	85	74 in.·lbf
Oil cooler x Oil cooler pipe	A/T	15	150	11
Fan motor (2JZ-GTE) x Fan shroud		4.9	50	43 in.·lbf
ECT switch (2JZ-GTE) x Radiator		7.4	75	65 in.·lbf
Fluid coupling x Water pump		16	165	12

LUBRICATION

SERVICE DATA

SS0DY-07

Oil pressure		at idle speed	49 kPa (0.5 kgf/cm^2, 7.1 psi) or more
		at 3,000 rpm	324 - 579 kPa (3.3 - 5.9 kgf/cm^2, 49 - 84 psi)
Oil pump (2JZ-GE)	Tip clearance	STD	0.060 - 0.240 mm (0.0024 - 0.0094 in.)
		Maximum	0.30 mm (0.0118 in.)
	Body clearance	STD	0.100 - 0.175 mm (0.0039 - 0.0069 in.)
		Maximum	0.20 mm (0.0079 in.)
	Side clearance	STD	0.030 - 0.090 mm (0.0012 - 0.0035 in.)
		Maximum	0.12 mm (0.0047 in.)
Oil pump (2JZ-GTE)	Tip clearance	STD	0.056 - 0.326 mm (0.0022 - 0.0128 in.)
		Maximum	0.40 mm (0.0157 in.)
	Body clearance	STD	0.080 - 0.135 mm (0.0031 - 0.0053 in.)
		Maximum	0.16 mm (0.0063 in.)
	Side clearance	STD	0.020 - 0.065 mm (0.0007 - 0.0026 in.)
		Maximum	0.10 mm (0.0039 in.)

SS0DZ-07

TORQUE SPECIFICATION

Part tightened		N·m	kgf·cm	ft·lbf
A/C compressor x Cylinder block	Stud bolt	26	265	19
	Bolt and nut	52	530	38
Oil pressure switch x Cylinder block		14	150	11
Drive belt tensioner Damper x Tensioner arm	2JZ-GTE M/T	20	200	14
Drive belt tensioner Damper x Drive belt tensioner bracket	2JZ-GTE M/T	20	200	14
Oil drain plug x No.2 oil pan		38	375	27
Oil pump body cover x Oil pump body		10	105	8
Plug x Oil pump body	2JZ-GE	49	500	36
	2JZ-GTE	29	300	22
Oil pump x Cylinder block		21	210	15
No.1 oil pan x Cylinder block	12 mm head	21	210	15
	14 mm head	39	400	29
Turbo oil outlet pipe (2JZ-GTE) x No.1 oil pan		27	280	20
Oil pan baffle plate x No.1 oil pan		8.8	90	78 in.·lbf
Oil strainer x No.1 oil pan		8.8	90	78 in.·lbf
No.2 oil pan x No.1 oil pan		8.8	90	78 in.·lbf
Oil level sensor x No.1 oil pan		5.4	55	48 in.·lbf
Drive belt tensioner bracket (2JZ-GTE M/T) x Oil pump		27	280	20
Crankshaft position sensor x Oil pump		8.8	90	78 in.·lbf
Oil cooler (2JZ-GTE) x Oil filter bracket		78	800	58
Oil nozzle (2JZ-GTE) x Cylinder block		8.8	90	78 in.·lbf

IGNITION (2JZ-GTE)

SS0E2-02

SERVICE DATA

Spark plug	Recommended spark plug	DENSO	PK20R11
		NGK	BKR6EP11
	Correct electrode gap for new plug		1.1 mm (0.043 in.)
	Maximum electrode gap for used plug		1.3 mm (0.051 in.)
Ignition coil	Primary coil resistance	at cold	0.54 - 0.84 Ω
		at hot	0.68 - 0.98 Ω
Camshaft position sensor	Resistance	at cold	835 - 1,400 Ω
		at hot	1,060 - 1,645 Ω
Crankshaft position sensor	Resistance	at cold	835 - 1,400 Ω
		at hot	1,060 - 1,645 Ω

SS0E3-02

TORQUE SPECIFICATION

Part tightened	N·m	kgf·cm	ft·lbf
Spark plug x Cylinder head	18	180	13
Ignition coil bracket x Cylinder head	8.8	90	78 in.·lbf
Camshaft position sensor x Cylinder head	8.8	90	78 in.·lbf
Engine hanger x Cylinder head	39	400	29
Crankshaft position sensor x Oil pump	8.8	90	78 in.·lbf

STARTING

SERVICE DATA

SS0E4-01

Starter	Rated voltage and output power		12 V 1.4 kW
	No-load characteristics	Current	90 A or less at 11.5 V
		rpm	3,000 rpm or more
	Brush length	STD	15.5 mm (0.610 in.)
		Minimum	10.0 mm (0.394 in.)
	Spring installed load	STD	17.6 - 23.5 N (1.8 - 2.4 kgf, 3.9 - 5.3 lbf)
		Minimum	11.8 N (1.2 kgf, 2.6 lbf)
	Commutator		
	Diameter	STD	30.0 mm (1.181 in.)
		Minimum	29.0 mm (1.412 in.)
	Undercut depth	STD	0.6 mm (0.024 in.)
		Minimum	0.2 mm (0.008 in.)
	Circle runout	Maximum	0.05 mm (0.0020 in.)
	Magnetic switch		
	Contact plate for wear	Maximum	0.9 mm (0.035 in.)

SS0E5-01

TORQUE SPECIFICATION

Part tightened	N·m	kgf·cm	ft·lbf
Starter x Clutch housing	37	380	27
Lead wire x Terminal C of starter	5.9	60	52 in.·lbf
Field frame x Armature assembly	5.9	60	52 in.·lbf
Starter housing x Magnetic switch	5.9	60	52 in.·lbf
End cover x Field frame	1.5	15	13 in.·lbf
Terminal nut x Terminal 30 of starter	17	173	13
Terminal nut x Terminal C of starter	17	173	13
Magnetic switch end cover x Magnetic switch	2.5	26	22 in.·lbf

CHARGING

SS0E6-01

SERVICE DATA

Battery	Voltage (Maintenance-free battery)	at 20˚C (68˚F)	12.5 - 12.9 V
	Specific gravity (Except maintenance-free battery)		
		at 20˚C (68˚F)	1.25 - 1.29
Generator	Rated output	2JZ-GE	12 V 80 A
		2JZ-GTE (M/T)	12 V 90 A
		2JZ-GTE (A/T)	12 V 100 A
	Rotor coil resistance	at 20˚C (68˚C)	2.7 - 3.1 Ω
	Slip ring diameter	STD	14.2 - 14.4 mm (0.559 - 0.567 in.)
		Minimum	12.8 mm (0.504 in.)
	Brush exposed length	STD	9.5 -11.5 mm (0.374 -0.453 in.)
		Minimum	1.5 mm (0.059 in.)
Voltage regulator	Regulating voltage		13.2 - 14.8 V

SS0E7-07

TORQUE SPECIFICATION

Part tightened	N·m	kgf·cm	ft·lbf
Bearing retainer x Drive end frame	3.0	31	27 in.·lbf
Rectifier end frame x Drive end frame	4.5	46	40 in.·lbf
Generator pulley x Rotor	110.5	1,125	81
Rectifier holder x Coil lead on rectifier end frame	2.9	30	26 in.·lbf
Wire clip x Rectifier end frame	5.4	55	48 in.·lbf
Voltage regulator x Rectifier end frame	2.0	20	18 in.·lbf
Voltage regulator x Rectifier holder	2.0	20	18 in.·lbf
Brush holder x Rectifier holder	2.0	20	18 in.·lbf
Brush holder x Voltage regulator	2.0	20	18 in.·lbf
Rear end cover x Rectifier holder	4.4	45	39 in.·lbf
Plate terminal x Rectifier holder	3.9	40	35 in.·lbf
Terminal insulator x Rectifier holder	6.5	67	58 in.·lbf
Generator x Water pump	37	380	27
Generator x Cylinder block	37	380	27

CLUTCH

SS0D9-01

SERVICE DATA

Pedal height from asphalt sheet		146.2 - 156.2 mm (5.76 - 6.15 in.)
Pedal freeplay		5.0 - 15.0 mm (0.197 - 0.591 in.)
Push rod play at pedal top		1.0 - 5.0 mm (0.039 - 0.197 in.)
Full pedal stroke		132.0 - 138.0 mm (5.20 - 5.43 in.)
Clutch release point from pedal full stroke end position		25 mm (0.98 in.) or more
Disc rivet head depth	Max.	0.3 mm (0.012 in.)
Disc runout	Max.	0.8 mm (0.031 in.)
Diaphragm spring out non-alignment	Max.	0.5 mm (0.020 in.)
Diaphragm spring finger wear (Depth)	Max.	0.6 mm (0.024 in.)
Diaphragm spring finger wear (Width)	Max.	5.0 mm (0.197 in.)
Flywheel runout	Max.	0.1 mm (0.004 in.)
Flywheel damper rotational freeplay	STD	105 mm (4.134 in.)

SS0DA-02

TORQUE SPECIFICATION

Part tightened	N·m	kgf·cm	ft·lbf
Clutch cover x Flywheel	19	195	14
Master cylinder set nut	12	125	9
Release cylinder set bolt	12	120	9
Clutch line bracket (2JZ-GE)	4.9	50	43 in.·lbf
Clutch line union	15	155	11
Bleeder plug	11	110	8
Flywheel set bolt	49	500	36
Release fork support (2JZ-GTE)	25	260	18
Release fork support (2JZ-GE)	39	400	29
Clutch housing cover LH (2JZ-GTE)	12	120	9

MANUAL TRANSMISSION (V160)

SS0DB-01

SERVICE DATA

Companion flange adjusting shim thickness	1.15 - 1.20 mm (0.0453 - 0.0472 in.) 1.25 - 1.30 mm (0.0492 - 0.0512 in.) 1.45 - 1.50 mm (0.0571 - 0.0591 in.) 1.65 - 1.70 mm (0.0650 - 0.0669 in.) 1.85 - 1.90 mm (0.0729 - 0.0748 in.) 1.95 - 2.00 mm (0.0768 - 0.0787 in.)

SS0DC-01

TORQUE SPECIFICATION

Part tightened	N·m	kgf·cm	ft·lbf
Engine rear mounting x Transmission	25	250	18
Shift lever retainer x Transmission	19	195	14
Transmission x Engine	72	730	53
Starter x Transmission	39	400	29
Rear engine mounting member x Body	25	260	19
Rear engine mounting member x Transmission	13	135	10
Clutch cover x Flywheel	19	195	14
Service hole cover set bolt	12	120	9
Clutch release cylinder set bolt	12	120	9
Transmission shift lever x Control rod	19	195	14
Crossmember brace x Body	13	130	9
Heat insulator x Body	5.4	55	48 in.·lbf
Exhaust center pipe x Exhaust tail pipe	19	195	14
Exhaust front pipe x Exhaust center pipe	58	590	43
Pipe support bracket x Clutch housing	37	380	27
Exhaust front pipe x No.2 exhaust front pipe	58	590	43
Oxygen sensor set nut	20	200	14
Transmission shift lever x Shift lever retainer	7.8	80	69 in.·lbf
Release fork support x Transmission	26	260	19
Vehicle speed sensor set bolt	11	110	8
Companion flange lock nut (Temporary tighten)	120 190	1,220 1,940	88 140
Front bearing retainer set bolt	10	100	7

AUTOMATIC TRANSMISSION (2JZ-GTE)

SS0CT-01

SERVICE DATA

Line pressure (Wheel locked)		
	Engine idling	
	D position	471 - 530 kPa (4.8 - 5.4 kgf/cm^2, 68 - 77 psi)
	R position	686 - 785 kPa (7.0 - 8.0 kgf/cm^2, 100 - 114 psi)
	AT stall (Throttle valve fully opened)	
	D position	1,334 - 1,470 kPa (13.6 - 15.0 kgf/cm^2, 193 - 213 psi)
	R position	1,697 - 2,030 kPa (17.3 - 20.7 kgf/cm^2, 246 - 294 psi)
Engine stall revolution	D and R positions	2,600 ± 150 rpm
Time lag	N → D position	Less than 1.2 seconds
	N → R position	Less than 1.5 seconds
Engine idle speed (A/C OFF)	N position	650 ± 50 rpm
Drive plate runout	Max.	0.20 mm (0.0079 in.)
Torque converter clutch runout	Max.	0.30 mm (0.0118 in.)
Torque converter clutch installation distance		More than 0.1 mm (0.004 in.)
Shift schedule (NORM mode)		
D position		
(Throttle valve fully opened)	1 → 2	62 - 72 km/h (39 - 45 mph)
	2 → 3	120 - 129 km/h (75 - 80 mph)
	3 → O/D	187 - 201 km/h (116 - 125 mph)
	O/D → 3	181 - 195 km/h (112 - 121 mph)
	3 → 2	109 - 117 km/h (68 - 73 mph)
	2 → 1	41 - 47 km/h (25 - 29 mph)
(Throttle valve fully closed)	3 → O/D	29 - 34 km/h (18 - 25 mph)
	O/D → 3	23 - 28 km/h (14 - 17 mph)
2 position		
(Throttle valve fully opened)	2 → 1	62 - 72 km/h (39 - 45 mph)
	*3 → 2	135 - 147 km/h (84 - 91 mph)
	2 → 1	41 - 47 km/h (25 - 29 mph)
L position		
(Throttle valve fully opened)	*2 → 1	60 - 66 km/h (37 - 41 mph)
Shift schedule (MANU mode)		
D position		
(Throttle valve fully opened)	2 → 3	122 - 131 km/h (76 - 81 mph)
	3 → O/D	194 - 207 km/h (121 - 129 mph)
	O/D → 3	187 - 201 km/h (116 - 125 mph)
	3 → 2	109 - 117 km/h (68 - 73 mph)
(Throttle valve fully closed)	3 → O/D	181 - 195 km/h (112 - 121 mph)
	O/D → 3	23 - 28 km/h (14 - 17 mph)
2 position		
(Throttle valve fully opened)	*3 → 2	135 - 147 km/h (84 - 91 mph)
L position		
(Throttle valve fully opened)	*2 → 1	60 - 66 km/h (37 - 41 mph)

*: Shift points are the same when the throttle valve is closed as when the throttle valve is opened.

Lock-up point (NORM mode)	(Throttle valve opening 5 %)	
3rd gear	Lock-up ON	60 - 66 km/h (37 - 41 mph)
	Lock-up OFF	50 - 56 km/h (31 - 35 mph)
O/D gear	Lock-up ON	53 - 59 km/h (33 - 37 mph)
	Lock-up OFF	50 - 56 km/h (31 - 35 mph)
Lock-up point (MANU mode)	(Throttle valve opening 5 %)	
2nd gear (2 position)	Lock-up ON	60 - 66 km/h (37 - 41 mph)
	Lock-up OFF	57 - 63 km/h (35 - 39 mph)
3rd gear (D position)	Lock-up ON	60 - 66 km/h (37 - 41 mph)
	Lock-up OFF	57 - 63 km/h (35 - 39 mph)
O/D gear (D position)	Lock-up ON	181 - 195 km/h (112 - 121 mph)
	Lock-up OFF	69 - 76 km/h (43 - 47 mph)

SS0CU-02

TORQUE SPECIFICATION

Part tightened		N·m	kgf·cm	ft·lbf
No.1 vehicle speed sensor		16	160	12
No.2 vehicle speed sensor		5.4	55	48 in.·lbf
O/D direct clutch speed sensor		5.4	55	48 in.·lbf
ATF temperature sensor		15	150	11
Valve body		10	100	7
Oil strainer		10	100	7
Oil pan		7.4	75	65 in.·lbf
Starter		37	380	27
Rear support x Body		25	250	19
Torque converter clutch x Drive plate		54	550	40
Oil cooler union nut		44	450	33
Oil cooler pipe bracket		10	100	7
Drive plate x Crankshaft		83	850	61
Transmission x Engine block	14 mm bolt	37	380	27
	17 mm bolt	72	730	53
Park/neutral position switch x Transmission case		13	130	9
Transmission output flange		123	1,250	90
Shift control rod x Shift lever		13	130	9
Shift control rod x Park/neutral position switch		16	160	12
Exhaust pipe bracket x Transmission housing		37	380	27
No.2 exhaust pipe x Center exhaust pipe		58	590	43
Rear center floor crossmember brace x Body		13	130	9
Heat insulator x Body		5.4	55	48 in.·lbf
Drain plug		20	205	15
Propeller shaft x Transmission		56	570	41
Propeller shaft x Differential		79	805	58
Propeller shaft center support		49	500	36
Propeller shaft adjusting nut		53	540	39
Oil pan drain plug		17	175	13
Transmission rear support x Body		25	250	19

PROPELLER SHAFT

SS0CR-01

SERVICE DATA

Shaft runout		0.8 mm (0.031 in.)
Joint angle	No.2 joint	-1 °09' ± 36'
	No.3 joint	44' ± 36'

SS0CS-02

TORQUE SPECIFICATION

Part tightened		N·m	kgf·cm	ft·lbf
Propeller shaft x Differential		79	805	58
Propeller shaft x Intermediate shaft	2JZ-GE	74	750	54
Propeller shaft x Transmission	2JZ-GTE	56	570	41
Intermediate shaft x Center bearing x Universal joint flange		See page PR-8		
Center support bearing x Body		49	500	36
Oxygen sensor x Exhaust front pipe		44	450	34
No.2 front exhaust pipe x Front exhaust pipe		58	590	43
Crossmember brace x Body		13	130	8
Heat insulator x Body		5.4	55	48 in.·lbf
Adjusting nut	2JZ-GTE	69 (50)	700 (515)	51 (37)
Exhaust pipe support bracket x Transmission		37	380	27

( ): For use with SST

SUSPENSION AND AXLE

SERVICE DATA

SS0DD-04

Cold tire inflation pressure	2JZ-GE	Front	225/50R16 92V	230 kPa (2.3 kgf/cm^2, 33 psi)
		Rear	245/45R16 94V	230 kPa (2.3 kgf/cm^2, 33 psi)
	2JZ-GTE	Front	235/45ZR17	230 kPa (2.3 kgf/cm^2, 33 psi)
		Rear	255/40ZR17	230 kPa (2.3 kgf/cm^2, 33 psi)
Front wheel alignment	Vehicle height			
	2JZ-GE	Front*1	225/50R16 92V	186 mm (7.32 in.)
		Rear*2	245/45R16 94V	246 mm (9.68 in.)
	2JZ-GTE	Front*1	235/45ZR17	188 mm (7.40 in.)
		Rear*2	255/40ZR17	254 mm (10.00 in.)
	Camber	2JZ-GE	-0 °20' ± 45' (-0.33° ± 0.75°)	
		2JZ-GTE	-0 °30' ± 45' (-0.5° ± 0.75°)	
		Left-right error	30' (0.5°) or less	
	Caster	2JZ-GE	3°20' ± 45' (3.33° ± 0.75°)	
		2JZ-GTE	3°30' ± 45' (3.5° ± 0.75°)	
		Left-right error	30' (0.5°) or less	
	Steering axis inclination <Reference>	2JZ-GE	9°35' ± 45' (9.58° ± 0.75°)	
		2JZ-GTE	9°45' ± 45' (9.75° ± 0.75°)	
	Toe-in (Total)		0° ± 12' (0° ± 0.2°) 0 ± 2 mm (0 ± 0.08 in.)	
		Rack end length left-right error	1.5 mm (0.059 in.) or less	
	Wheel angle			
	2JZ-GE	Inside wheel	35°00' (33°00' – 36°00') 35° (33° – 36°)	
		Outside wheel <Reference>	30°45' (30.75°)	
	2JZ-GTE	Inside wheel	34°55' (33°55' – 36°55') 34.92° (32.92° – 35.92°)	
		Outside wheel <Reference>	30°35' (30.58°)	
Rear wheel alignment	Camber	2JZ-GE	-1 °35' ± 45' (-1.58° ± 0.75°)	
		2JZ-GTE	-1 °30' ± 45' (-1.5° ± 0.75°)	
		Left - right error	30' (0.5°) or less	
	Toe-in (Total)		0°18' ± 12' (0.3° ± 0.2°) 3 ± 2 mm (0.12 ± 0.08 in.)	

*1: Front measuring point

Measure from the ground to the center of the lower suspension arm front mounting bolt.

*2: Rear measuring point

Measure from the ground to the center of the lower suspension arm No.2 mounting bolt.

Front axle	Axle hub bearing backlash	Maximum	0.05 mm (0.0020 in.)
	Axle hub deviation	Maximum	0.05 mm (0.0020 in.)
Front suspension	Upper ball joint turning torque		1.0 - 3.4 N·m (10 - 35 kgf·cm, 9 - 30 in.·lbf)
	Lower ball joint turning torque		1.0 - 3.4 N·m (10 - 35 kgf·cm, 9 - 30 in.·lbf)
	Stabilizer bar link ball joint turning torque		0.05 - 1.0 N·m (0.5 - 10 kgf·cm, 0.4 - 8.7 in.·lbf)
Rear axle	Axle hub bearing backlash	Maximum	0.05 mm (0.0020 in.)
	Axle hub deviation	Maximum	0.05 mm (0.0020 in.)
Rear drive shaft	Drive shaft standard length 2JZ-GE	 RH LH	 598.1 mm (23.547 in.) 552.2 mm (21.740 in.)
	2JZ-GTE (M/T)	RH LH	598.5 mm (23.602 in.) 547.5 mm (21.555 in.)
	2JZ-GTE (A/T)	RH LH	598.5 mm (23.602 in.) 553.5 mm (21.791 in.)
Rear suspension	Upper ball joint turning torque		1.0 - 3.4 N·m (10 - 35 kgf·cm, 9 - 30 in.·lbf)
	No. 1 Lower ball joint turning torque		1.0 - 3.4 N·m (10 - 35 kgf·cm, 9 - 30 in.·lbf)
	No. 2 Lower ball joint turning torque		1.0 - 3.4 N·m (10 - 35 kgf·cm, 9 - 30 in.·lbf)
	Stabilizer bar link ball joint turning torque		0.05 - 1.0 N·m (0.5 - 10 kgf·cm, 0.4 - 8.7 in.·lbf)

Rear differential 2JZ-GTE (M/T)	Drive pinion oil seal drive in depth		2.0 ± 0.5 mm (0.079 ± 0.020 in.)
	Drive pinion shaft runout	Maximum	0.08 mm (0.0031 in.)
	Ring gear runout	Maximum	0.08 mm (0.0031 in.)
	Ring gear backlash		0.08 - 0.13 mm (0.0031 - 0.0051 in.)
	Drive pinion preload (at starting)	New bearing	2.0 - 2.5 N·m (20 - 25 kgf·cm, 17.3 - 21.7 in.·lbf)
		Reused bearing	1.0 - 1.2 N·m (10 - 12 kgf·cm, 8.9 - 10.6 in.·lbf)
	Total preload (at starting)		Drive pinion preload plus 0.4 - 0.6 N·m (4 - 6 kgf·cm, 3.5 - 5.2 in.·lbf)
	Distance between 2 side gear shafts		293.4 ± 0.65 mm (11.551 ± 0.026 in.)
	Ring gear backlash adjusting washer	No.	
		18	1.18 mm (0.0465 in.)
		20	1.20 mm (0.0472 in.)
		22	1.22 mm (0.0480 in.)
		24	1.24 mm (0.0488 in.)
		26	1.26 mm (0.0496 in.)
		28	1.28 mm (0.0504 in.)
		30	1.30 mm (0.0512 in.)
		32	1.32 mm (0.0520 in.)
		34	1.34 mm (0.0528 in.)
		36	1.36 mm (0.0535 in.)
		38	1.38 mm (0.0543 in.)
		40	1.40 mm (0.0551 in.)
		42	1.42 mm (0.0559 in.)
		44	1.44 mm (0.0567 in.)
		46	1.46 mm (0.0575 in.)
		48	1.48 mm (0.0583 in.)
		50	1.50 mm (0.0591 in.)
		52	1.52 mm (0.0598 in.)
		54	1.54 mm (0.0606 in.)
		56	1.56 mm (0.0614 in.)
		58	1.58 mm (0.0622 in.)
		60	1.60 mm (0.0630 in.)
		62	1.62 mm (0.0638 in.)
		64	1.64 mm (0.0646 in.)
		66	1.66 mm (0.0654 in.)
		68	1.68 mm (0.0661 in.)
		70	1.70 mm (0.0669 in.)
		72	1.72 mm (0.0677 in.)
		74	1.74 mm (0.0685 in.)
		76	1.76 mm (0.0693 in.)
		78	1.78 mm (0.0701 in.)
		80	1.80 mm (0.0709 in.)
		82	1.82 mm (0.0717 in.)
		84	1.84 mm (0.0724 in.)
		86	1.86 mm (0.0732 in.)
		88	1.88 mm (0.0740 in.)
		90	1.90 mm (0.0748 in.)
		92	1.92 mm (0.0756 in.)
		08	1.08 mm (0.0425 in.)
		10	1.10 mm (0.0433 in.)
		12	1.12 mm (0.0441 in.)
		14	1.14 mm (0.0449 in.)
		16	1.16 mm (0.0457 in.)

Rear differential 2JZ-GTE (M/T)	Tooth contact pattern adjusting washer	No.	
		80	1.80 mm (0.0709 in.)
		81	1.81 mm (0.0713 in.)
		82	1.82 mm (0.0717 in.)
		83	1.83 mm (0.0720 in.)
		84	1.84 mm (0.0724 in.)
		85	1.85 mm (0.0728 in.)
		86	1.86 mm (0.0732 in.)
		87	1.87 mm (0.0736 in.)
		88	1.88 mm (0.0740 in.)
		89	1.89 mm (0.0744 in.)
		90	1.90 mm (0.0748 in.)
		91	1.91 mm (0.0752 in.)
		92	1.92 mm (0.0756 in.)
		93	1.93 mm (0.0760 in.)
		94	1.94 mm (0.0764 in.)
		95	1.95 mm (0.0768 in.)
		96	1.96 mm (0.0772 in.)
		97	1.97 mm (0.0776 in.)
		98	1.98 mm (0.0780 in.)
		99	1.99 mm (0.0783 in.)
		00	2.00 mm (0.0787 in.)
		01	2.01 mm (0.0791 in.)
		02	2.02 mm (0.0795 in.)
		03	2.03 mm (0.0799 in.)
		04	2.04 mm (0.0803 in.)
		05	2.05 mm (0.0807 in.)
		06	2.06 mm (0.0811 in.)
		07	2.07 mm (0.0815 in.)
		08	2.08 mm (0.0819 in.)
		09	2.09 mm (0.0823 in.)
		10	2.10 mm (0.0827 in.)
		11	2.11 mm (0.0831 in.)
		12	2.12 mm (0.0835 in.)
		13	2.13 mm (0.0839 in.)
		14	2.14 mm (0.0843 in.)
		15	2.15 mm (0.0846 in.)
		16	2.16 mm (0.0850 in.)
		17	2.17 mm (0.0854 in.)
		18	2.18 mm (0.0858 in.)
		77	1.77 mm (0.0697 in.)
		78	1.78 mm (0.0701 in.)
		79	1.79 mm (0.0705 in.)

Rear differential Except 2JZ-GTE (M/T)	Drive pinion oil seal drive in depth		0 ± 0.5 mm (0 ± 0.020 in.)
	Drive pinion shaft runout	Maximum	0.08 mm (0.0031 in.)
	Ring gear runout	Maximum	0.05 mm (0.0020 in.)
	Ring gear backlash	Maximum	0.08 - 0.13 mm (0.0031 - 0.0051 in.)
	Drive pinion preload (at starting)	New bearing	1.5 - 1.8 N·m (15 - 18 kgf·cm, 13.0 - 16.0 in.·lbf)
		Reused bearing	0.5 - 0.8 N·m (5 - 8 kgf·cm, 4.3 - 6.9 in.·lbf)
	Total preload (at starting)		Drive pinion preload plus 0.5 - 0.8 N·m (5 - 8 kgf·cm, 4.3 - 6.9 in.·lbf)
	Distance between 2 side gear shafts		281.8 ± 0.95 mm (11.094 ± 0.037 in.)
	Pinion gear backlash	(Conventional type)	0.05 - 0.20 mm (0.0020 - 0.0079 in.)
	Pinion gear backlash adjusting thrust washer	(Conventional type)	1.6 mm (0.063 in.) 1.7 mm (0.067 in.) 1.8 mm (0.071 in.)

Rear differential Except 2JZ-GTE (M/T)	Ring gear backlash adjusting washer	No.	
		02	2.02 mm (0.0795 in.)
		04	2.04 mm (0.0803 in.)
		06	2.06 mm (0.0811 in.)
		08	2.08 mm (0.0819 in.)
		10	2.10 mm (0.0827 in.)
		12	2.12 mm (0.0835 in.)
		14	2.14 mm (0.0843 in.)
		16	2.16 mm (0.0850 in.)
		18	2.18 mm (0.0858 in.)
		20	2.20 mm (0.0866 in.)
		22	2.22 mm (0.0874 in.)
		24	2.24 mm (0.0882 in.)
		26	2.26 mm (0.0890 in.)
		28	2.28 mm (0.0898 in.)
		30	2.30 mm (0.0906 in.)
		32	2.32 mm (0.0913 in.)
		34	2.34 mm (0.0921 in.)
		36	2.36 mm (0.0929 in.)
		38	2.38 mm (0.0937 in.)
		40	2.40 mm (0.0945 in.)
		42	2.42 mm (0.0953 in.)
		44	2.44 mm (0.0961 in.)
		46	2.46 mm (0.0969 in.)
		48	2.48 mm (0.0976 in.)
		50	2.50 mm (0.0984 in.)
		52	2.52 mm (0.0992 in.)
		54	2.54 mm (0.1000 in.)
		56	2.56 mm (0.1008 in.)
		58	2.58 mm (0.1016 in.)
		60	2.60 mm (0.1024 in.)
		62	2.62 mm (0.1031 in.)
		64	2.64 mm (0.1039 in.)
		66	2.66 mm (0.1047 in.)
		68	2.68 mm (0.1055 in.)
		70	2.70 mm (0.1063 in.)
		72	2.72 mm (0.1071 in.)
		74	2.74 mm (0.1079 in.)
		76	2.76 mm (0.1087 in.)
		78	2.78 mm (0.1094 in.)
		80	2.80 mm (0.1102 in.)
		82	2.82 mm (0.1100 in.)
		84	2.84 mm (0.1118 in.)
		86	2.86 mm (0.1126 in.)

Rear differential Except 2JZ-GTE (M/T)	Tooth contact pattern adjusting washer	No.	
		87	1.87 mm (0.0736 in.)
		88	1.88 mm (0.0740 in.)
		89	1.89 mm (0.0744 in.)
		90	1.90 mm (0.0748 in.)
		91	1.91 mm (0.0752 in.)
		92	1.92 mm (0.0756 in.)
		93	1.93 mm (0.0760 in.)
		94	1.94 mm (0.0764 in.)
		95	1.95 mm (0.0768 in.)
		96	1.96 mm (0.0772 in.)
		97	1.97 mm (0.0776 in.)
		98	1.98 mm (0.0780 in.)
		99	1.99 mm (0.0783 in.)
		00	2.00 mm (0.0787 in.)
		01	2.01 mm (0.0791 in.)
		02	2.02 mm (0.0795 in.)
		03	2.03 mm (0.0799 in.)
		04	2.04 mm (0.0803 in.)
		05	2.05 mm (0.0807 in.)
		06	2.06 mm (0.0811 in.)
		07	2.07 mm (0.0815 in.)
		08	2.08 mm (0.0819 in.)
		09	2.09 mm (0.0823 in.)
		10	2.10 mm (0.0827 in.)
		11	2.11 mm (0.0831 in.)
		12	2.12 mm (0.0835 in.)
		13	2.13 mm (0.0839 in.)
		14	2.14 mm (0.0843 in.)
		15	2.15 mm (0.0846 in.)
		16	2.16 mm (0.0850 in.)
		17	2.17 mm (0.0854 in.)
		18	2.18 mm (0.0858 in.)
		19	2.19 mm (0.0862 in.)
		20	2.20 mm (0.0866 in.)
		21	2.21 mm (0.0870 in.)
		22	2.22 mm (0.0874 in.)
		23	2.23 mm (0.0878 in.)
		24	2.24 mm (0.0882 in.)
		25	2.25 mm (0.0886 in.)
		26	2.26 mm (0.0890 in.)
		27	2.27 mm (0.0894 in.)
		28	2.28 mm (0.0898 in.)

SS0DE-02

TORQUE SPECIFICATION

Part tightened		N·m	kgf·cm	ft·lbf
Front				
Hub nut		103	1,050	76
Lower suspension arm x Suspension crossmember		226	2,300	166
Lower suspension arm bracket stay	Bolt	44	450	32
	Nut	59	600	43
Tie rod end lock nut		56	570	41
Axle hub lock nut		199	2,030	147
Upper suspension arm x Sub-frame		164	1,670	121
Lower suspension arm x Shock absorber bracket		52	530	38
Tie rod end x Steering knuckle		49	500	36
Steering knuckle x Upper suspension arm		103	1,050	76
Steering knuckle x Lower suspension arm		125	1,270	92
Brake caliper x Steering knuckle		118	1,200	87
ABS speed sensor x Steering knuckle		7.8	80	69 in.·lbf
Upper suspension arm x ABS speed sensor wire harness clamp		5.4	55	48 in.·lbf
Front shock absorber x Body		35	360	26
Front shock absorber x Lower suspension arm		143	1,460	106
Front shock absorber x Suspension support		29	300	22
Stabilizer bar link x Shock absorber bracket		74	750	54
Stabilizer bar link x Stabilizer bar		74	750	54
Stabilizer bar bracket x Body		18	180	13
Steering knuckle x Brake dust cover		8.0	85	74 in.·lbf

Part tightened		N·m	kgf·cm	ft·lbf
Rear				
Hub nut		103	1,050	76
Rear shock absorber x Lower suspension arm No.2		137	1,400	101
Upper suspension arm x Suspension crossmember		164	1,670	121
Rear axle carrier x Brake caliper		104	1,065	77
Lower suspension arm No.1 x Rear axle carrier		59	600	43
Lower suspension arm No.1 x Subframe		184	1,880	136
Lower suspension arm No.2 x Rear axle carrier		150	1,525	110
Lower suspension arm No.2 x suspension crossmember		184	1,880	136
Lower suspension arm brace x Subframe		18	180	13
ABS speed sensor x Rear axle carrier		7.8	80	69 in.·lbf
Parking brake cable set bolt		8.0	80	69 in.·lbf
Strut rod x Rear axle carrier		184	1,880	136
Strut rod x Body		184	1,880	136
Rear drive shaft x Axle hub		289	2,950	213
Upper suspension arm x Rear axle carrier		108	1,100	80
Backing plate x Rear axle carrier		26	260	19
Shoe guide plate set bolt		18	185	13
Parking brake cable clamp set bolt		19	190	14
Rear axle carrier x Backing plate	Hexagon bolt	180	1,825	132
Rear drive shaft x Differential	2JZ-GE	65	660	48
	2JZ-GTE	83	850	61
Heat insulator set nut		5.4	55	48 in.·lbf
Center floor crossmember brace set nut		13	130	9
Center support bearing set bolt		49	500	36
Rear differential x Propeller shaft		79	805	58
Propeller shaft x Transmission	2JZ-GTE	56	570	41
Oxygen sensor	2JZ-GE	44	450	34
Front exhaust pipe x Center exhaust pipe	2JZ-GE	44	450	33
	2JZ-GTE	58	590	43
Oxygen sensor set nut	2JZ-GTE	20	200	14
Differential mounting bolt	Front	147	1,500	108
	Rear	142	1,450	105
Ring gear x Differential case		See page SA-74		
Drive pinion x Companion flange	2JZ-GTE M/T (Maximam)	510	5,200	376
	Except 2JZ-GTE M/T (Maximam)	490	5,000	362
Differential carrier retainer set bolt	2JZ-GTE M/T	47	480	35
	Except 2JZ-GTE M/T	22	225	16
Differential carrier cover set bolt	2JZ-GTE M/T	78	800	58
	Except 2JZ-GTE M/T	47	475	34
Differential carrier cover x Deflector		7.0	70	62 in.·lbf
Drain and Filler plug		49	500	36
Breather plug		21	210	15
Shock absorber x Body		26	260	19
Shock absorber cape x Suspension support		10	105	8
Suspension support x Shock absorber		27	280	20

Stabilizer bar link x Lower suspension arm No.2	74	750	54
Stabilizer bar link x Stabilizer bar	74	750	54
Stabilizer bar bracket x Body	31	320	23

BRAKE

SS0D3-01

SERVICE DATA

Brake pedal height from asphalt sheet		154.2 - 164.2 mm (6.071 - 6.465 in.)
Brake pedal freeplay		1 - 6 mm (0.04 - 0.24 in.)
Brake pedal reserve distance at 490 N (50 kgf, 110.2 lbf) 2JZ-GTE Engine 2JZ-GE Engine		 More than 70 mm (2.76 in.) More than 72 mm (2.83 in.)
Brake booster push rod to piston clearance (w/ SST)		0 mm (0 in.)
Front brake pad thickness (2JZ-GTE Engine)	STD	12.0 mm (0.472 in.)
Front brake pad thickness (2JZ-GTE Engine)	Minimum	1.0 mm (0.039 in.)
Front brake pad thickness (2JZ-GE Engine)	STD	11.0 mm (0.433 in.)
Front brake pad thickness (2JZ-GE Engine)	Minimum	1.0 mm (0.039 in.)
Front brake disc thickness (2JZ-GTE Engine)	STD	30.0 mm (1.181 in.)
Front brake disc thickness (2JZ-GTE Engine)	Minimum	28.0 mm (1.102 in.)
Front brake disc thickness (2JZ-GE Engine)	STD	32.0 mm (1.260 in.)
Front brake disc thickness (2JZ-GE Engine)	Minimum	30.0 mm (1.181 in.)
Front brake disc runout	Maximum	0.05 mm (0.0020 in.)
Rear brake disc pad thickness (2JZ-GTE Engine)	STD	11.0 mm (0.433 in.)
Rear brake disc pad thickness (2JZ-GTE Engine)	Minimum	1.0 mm (0.039 in.)
Rear brake disc pad thickness (2JZ-GE Engine)	STD	10.0 mm (0.394 in.)
Rear brake disc pad thickness (2JZ-GE Engine)	Minimum	1.0 mm (0.039 in.)
Rear brake disc thickness	STD	16.0 mm (0.630 in.)
Rear brake disc thickness	Minimum	15.0 mm (0.591 in.)
Rear brake disc runout	Maximum	0.05 mm (0.0020 in.)
Rear brake disc inside diameter	STD	190 mm (7.48 in.)
Rear brake disc inside diameter	Maximum	191 mm (7.52 in.)
Parking brake lining thickness	STD	2.5 mm (0.098 in.)
Parking brake lining thickness	Minimum	1.0 mm (0.039 in.)
Parking brake lever travel at 196 N (20 kgf, 44.1 lbf)		5 - 8 clicks
Parking brake clearance between rear shoe and lever		Less than 0.35 mm (0.0138 in.)
Parking brake adjusting shim thickness for rear disc brake		0.3 mm (0.012 in.) 0.6 mm (0.024 in.) 0.9 mm (0.035 in.)

SS0D4-01

TORQUE SPECIFICATION

Part tightened		N·m	kgf·cm	ft·lbf
Master cylinder x Piston stopper bolts		10	100	7
Master cylinder x Reservoir		1.8	18	16 in.·lbf
Master cylinder x Brake booster		13	130	9
Brake line union nut		15	155	11
Brake booster clevis lock nut		25	260	19
Brake booster x Pedal bracket		13	130	9
Bleeder plug		11	110	8
Front disc brake caliper x Steering knuckle	2JZ-GTE Engine	118	1,200	87
Front disc brake torque plate x Steering knuckle	2JZ-GE Engine	118	1,200	87
Front disc brake caliper installation bolt	2JZ-GE Engine	34	350	25
Front disc brake caliper x Flexible hose union bolt		30	310	22
Rear disc brake caliper x Axle carrier	2JZ-GTE Engine	104	1,065	77
Rear disc brake torque plate x Axle carrier	2JZ-GE Engine	104	1,065	77
Rear disc brake caliper installation bolt	2JZ-GE Engine	34	350	25
Rear disc brake caliper x Flexible hose union bolt		30	310	22
ABS actuator x ABS actuator bracket		5.4	55	48 in.·lbf
ABS actuator assembly x Body		19	195	14
Cruise control actuator x Body		19	195	14
Cruise control actuator x ABS actuator x Body		19	195	14
Front speed sensor installation bolt		7.8	80	69 in.·lbf
Front speed sensor harness set bolt		5.4	55	48 in.·lbf
Rear speed sensor installation bolt		7.8	80	69 in.·lbf
Rear speed sensor harness set nut		5.4	55	48 in.·lbf

STEERING

SERVICE DATA

SS0D0-01

POWER STEERING FLUID		
Fluid level rise	Maximum	5 mm (0.20 in.)
Fluid pressure at idle speed with valve closed	Minimum	7,355 kPa (75 kgf/cm^2, 1,067 psi)
STEERING WHEEL		
Steering wheel freeplay	Maximum	30 mm (1.18 in.)
Steering effort at idle speed	Maximum	6.9 N·m (70 kgf·cm, 61 in.·lbf)
TILT STEERING COLUMN		
Pawl stopper	Mark	
	1 or A	12.68 - 12.74 mm (0.4992 - 0.5016 in.)
	2 or B	12.61 - 12.67 mm (0.4965 - 0.4988 in.)
	3 or C	12.54 - 12.60 mm (0.4937 - 0.4961 in.)
	4 or D	12.47 - 12.53 mm (0.4909 - 0.4933 in.)
	5 or E	12.40 - 12.46 mm (0.4882 - 0.4906 in.)
	6 or F	12.33 - 12.39 mm (0.4854 - 0.4878 in.)
	7 or G	12.26 - 12.32 mm (0.4827 - 0.4850 in.)
PS VANE PUMP		
Rotor shaft bushing oil clearance	STD	0.03 - 0.05 mm (0.0012 - 0.0020 in.)
	Maximum	0.07 mm (0.0028 in.)
Vane plate height	Minimum	8.6 mm (0.339 in.)
Vane plate thickness	Minimum	1.40 mm (0.0551 in.)
Vane plate length	Minimum	14.99 mm (0.5902 in.)
Vane plate to rotor groove clearance	Maximum	0.035 mm (0.00137 in.)
Vane plate length	Rotor and cam ring mark	
	NONE	14.999 - 15.001 mm (0.59051 - 0.59059 in.)
	1	14.997 - 14.999 mm (0.59043 - 0.59051 in.)
	2	14.995 - 14.997 mm (0.59035 - 0.59043 in.)
	3	14.993 - 14.995 mm (0.59027 - 0.59035 in.)
	4	14.991 - 14.993 mm (0.59020 - 0.59027 in.)
Spring free length	Minimum	33 mm (1.30 in.)
Vane pump rotating torque	Maximum	0.2 N·m (2.5 kgf·cm, 2.2 in.·lbf)
PS GEAR		
Steering rack runout	Maximum	0.30 mm (0.0118 in.)
Total preload		1.0 - 1.9 N·m (10 - 20 kgf·cm, 8.7 - 17.4 in.·lbf)
PROGRESSIVE POWER STEERING (PPS)		
Solenoid valve resistance		6 - 11 Ω

SS0D1-01

TORQUE SPECIFICATION

Part tightened		N·m	kgf·cm	ft·lbf
STEERING COLUMN				
Steering wheel set nut		35	360	26
Steering wheel pad set screw		7.1	72	62 in.·lbf
Column assembly set nut		25	260	19
Intermediate shaft x Sliding yoke		35	360	26
Sliding yoke x Control valve shaft		35	360	26
Tilt memory bolt x Square nut		6.4	65	56 in.·lbf
Tilt lever assembly set screw		4.7	48	42 in.·lbf
Tilt pawl set nut		5.9	60	52 in.·lbf
Tilt lever retainer set nut		15	150	11
Tilt memory bolt set nut		5.9	60	52 in.·lbf
Turn signal bracket set bolt		8.8	90	78 in.·lbf
Compression spring set screw		6.4	65	56 in.·lbf
PS VANE PUMP				
PS vane pump set bolt	RH side bolt	39	400	29
	LH side bolt	58	590	42
Union bolt		49	500	36
PS vane pump pulley set nut		43	440	32
Front housing x Rear housing		17	170	12
Pressure port union		83	850	61
Oil reservoir set bolt (2JZ-GE)	Front side bolt	13	130	9
	Rear side bolts	17	170	12
Suction port union set bolt (2JZ-GTE)		13	130	9
PS GEAR				
Tie rod end x Steering knuckle		49	500	36
Pressure feed and return tube set union bolts		49	500	36
Gear housing set bolt and nut		75	770	55
Pressure control valve assembly x Control valve housing		18	185	13
Control valve housing set bolt		18	185	13
Self-locking nut		39	400	29
Rack housing cap		69	700	50
Rack guide spring cap lock nut		50 (69)	513 (700)	37 (51)
Rack end		75 (100)	760 (1,020)	55 (74)
Tie rod end lock nut		56	570	41
Turn pressure tube union nut		24 (29)	243 (300)	18 (22)
Turn pressure tube union bolt		34	350	25

( ): For use without SST

SUPPLEMENTAL RESTRAINT SYSTEM

SS0D8-02

TORQUE SPECIFICATION

Part tightened	N·m	kgf·cm	ft·lbf
Steering wheel	35	360	26
Steering wheel pad	7.1	72	62 in.·lbf
Front passenger airbag assembly x Instrument panel reinforcement	21	210	15
Front passenger airbag assembly x Instrument panel	8.8	90	78 in.·lbf
Airbag sensor assembly	21	210	15

BODY ELECTRICAL

SS0DF-02

SERVICE DATA

INTEGRATION RELAY (Relay Circuit)	
(Light Auto Turn Off System)	
B2 - Ground (Constant)	Battery positive voltage
B3 - Ground (Constant)	Battery positive voltage
A7 - Ground (Ignition switch LOCK or ACC)	No voltage
A7 - Ground (Ignition switch ON)	Battery positive voltage
A1 - Ground (Constant)	Battery positive voltage
DAYTIME RUNNING LIGHT MAIN RELAY	
(Wire Harness Side)	
2 - Ground (Ignition switch position LOCK or ACC)	No voltage
2 - Ground (Ignition switch position ON)	Battery positive voltage
11 - Ground (Engine stop)	No voltage
11 - Ground (Engine running)	Battery positive voltage
15 - Ground (Constant)	Battery positive voltage
17 - Ground (Constant)	Battery positive voltage
TURN SIGNAL FLASHER	
Flashes/Minute	60 - 120
INTEGRATION RELAY	
(Interior Light System)	
1 - Ground (Constant)	Battery positive voltage
9 - Ground (Ignition switch position LOCK or ACC)	No voltage
9 - Ground (Ignition switch position ON)	Battery positive voltage
SPEEDOMETER (USING A SPEEDOMETER TESTER)	
USA:	
Standard indication (mph)	Allowable range (mph)
20	18 - 24
40	38 - 44
60	58 - 66
80	78 - 88
100	98 - 110
120	118 - 132
CANADA:	
Standard indication (km/h)	Allowable range (km/h)
20	17 - 24
40	38 - 46
60	57.5 - 67
80	77 - 88
100	96 - 109
120	115 - 130
140	134 - 151.5
160	153 - 173
TACHOMETER (ON-VEHICLE)	
Standard indication (rpm)	Allowable range (rpm)

700	630 - 770
1,000	915 - 1,115
2,000	1,920 - 2,220
3,000	2,890 - 3,350
4,000	3,940 - 4,400
5,000	5,025 - 5,425
6,500	6,650 - 6,950
7,000	7,025 - 7,625
OD/TRIP METER	
(Connector Connected)	
1 - Ground (Ignition switch position ON)	Battery positive voltage
4 - Ground (Light Control switch position TAIL or HEAD)	Battery positive voltage
5 - 7 (Ignition switch ON and drive the vehicle slowly)	0V ↔ Battery positive voltage
6 - 7 (Ignition switch ON and drive the vehicle slowly)	0V ↔ more than 5V
8 - Ground (Constant)	Battery positive voltage
10 - Ground (Ignition SW ON, Light Control SW TAIL or HEAD and turn the Light Control Rheostat knob to clockwise)	6V → 0V
FUEL RECEIVER GAUGE	
Between terminals	Resistance (Ω)
A - B	Approx. 269.7
A - C	Approx. 123.5
B - C	Approx. 146.2
FUEL SENDER GAUGE	
Float position: mm (in.)	Resistance (Ω)
F: Approx. 33.8 (1.331)	Approx. 4.0
1/2: Approx. 44.8 (1.764)	Approx. 55.0
E: Approx. 141.1 (5.555)	Approx. 107.0
ENGINE COOLANT TEMPERATURE RECEIVER GAUGE	
Between terminals	Resistance (Ω)
A - B	Approx. 229.7
A - C	Approx. 54.0
B - C	Approx. 175.7
ENGINE COOLANT TEMPERATURE SENDER GAUGE	
Temperature ˚C (˚F)	Resistance (Ω)
50 (122.0)	160 - 240
120 (248.0)	17.1 - 21.2
LIGHT FAILURE SENSOR	
3 - Ground (Light Control SW position OFF)	No voltage
3 - Ground (Light Control SW position TAIL or HEAD)	Battery positive voltage
4 - Ground (Ignition SW position LOCK or ACC)	No voltage
4 - Ground (Ignition SW position ON)	Battery positive voltage
7 - Ground (Stop Light SW position OFF)	No voltage
7 - Ground (Stop Light SW position ON)	Battery positive voltage
8 - Ground (Engine stop)	No voltage
8 - Ground (Engine running)	Battery positive voltage
INTEGRATION RELAY	

(Seat Belt Warning)	
1 - Ground (Constant)	Battery positive voltage
9 - Ground (Ignition SW LOCK or ACC)	No voltage
9 - Ground (Ignition SW ON)	Battery positive voltage
ANTENNA MOTOR CONTROL RELAY	
(Wire Harness Side)	
1 - Ground (Constant)	Battery positive voltage
4 - Ground (Ignition switch position ON)	Battery positive voltage
5 - Ground (Ignition position ACC or ON)	Battery positive voltage
7 - Ground (Ignition SW position ACC or ON and radio SW ON)	Battery positive voltage
8 - Ground (Ignition SW position ACC or ON)	Battery positive voltage

BODY

TORQUE SPECIFICATION

SS0D7-01

Part tightened	N·m	kgf·cm	ft·lbf
FRONT BUMPER	-	-	-
Reinforcement x Body	5.9	60	52 in.·lbf
Front bumper cover x Body	5.9	60	52 in.·lbf
REAR BUMPER	-	-	-
Reinforcement x Body	42	430	31
Rear bumper cover x Body	5.9	60	52 in.·lbf
HOOD	-	-	-
Hood hinge x Hood	13	130	9.4
Hood lock x Body	8.8	90	78 in.·lbf
FRONT DOOR	-	-	-
Door hinge x Body	52	530	38
Door hinge x Door panel	25	260	19
Window regulator x Door glass	7.4	76	67 in.·lbf
Door lock x Door panel	5.0	51	44 in.·lbf
Window regulator x Door panel	7.4	76	67 in.·lbf
Window guide lower plate x Door panel	5.4	55	48 in.·lbf
Door window upper stop x Door panel	11	115	8.3
BACK DOOR	-	-	-
Back door hinge x Body	21	210	15
Back door hinge x Back door	13	130	9.4
Door lock x Body	19	195	14
Door lock striker x Body	13	130	9.4
Back door damper stay x Body	5.9	60	52 in.·lbf
Back door damper stay x Back door	7.8	80	69 in.·lbf
WIPER AND WASHER	-	-	-
Front Wiper	-	-	-
Wiper arm x Wiper link	22	225	16
Rear Wiper	-	-	-
Wiper arm x Wiper motor	11	110	8.0
INSTRUMENT PANEL	-	-	-
Steering column x Instrument panel reinforcement	25	260	19
Front passenger airbag assembly x Instrument panel reinforcement	21	210	15
Front passenger airbag assembly x Instrument panel	8.8	90	78 in.·lbf
Steering wheel x Steering column	35	360	26
Steering wheel pad x Steering wheel	7.1	72	62 in.·lbf
FRONT SEAT	-	-	-
Seat adjuster x Body	37	375	27
Seat adjuster x Seatback	18	185	13
Seat adjuster x Seat cushion	18	185	13
REAR SEAT	-	-	-
Seatback x Body	25	260	19
Reclining adjuster x Seatback	18	185	13

SEAT BELT	-	-	-
Front Seat Belt	-	-	-
Shoulder anchor x Body	43	440	32
Outer belt anchor x Body	43	440	32
Retractor x Body (Upper Side)	7.8	80	69 in.·lbf
Retractor x Body (Lower Side)	43	440	32
Inner belt x Seat	43	440	32
Rear Seat Belt	-	-	-
Shoulder anchor x Body	43	440	32
Outer belt anchor x Body	43	440	32
Retractor x Body	43	440	32
Inner belt x Body	43	440	32

AIR CONDITIONING

SERVICE DATA

SS0CW-01

Refrigerant charge volume	700 ± 50 g (24.96 ± 1.76 oz.)
Idle speed	
2JZ-GE (M/T)	
Magnetic clutch not engaged	Approx. 700 rpm
Magnetic clutch engaged	Approx. 900 rpm
2JZ-GE (A/T)	
Magnetic clutch not engaged	Approx. 700 rpm
Magnetic clutch engaged	Approx. 800 rpm
2JZ-GTE	
Magnetic clutch not engaged	Approx. 650 rpm
Magnetic clutch engaged	Approx. 800 rpm
Magnetic clutch clearance	0.5 ± 0.15 mm (0.020 ± 0.0059 in.)

SS0CX-01

TORQUE SPECIFICATION

Part tightned	N·m	kgf·cm	ft·lbf
Compressor x Suction hose	10	100	7
Compressor x Discharge hose	10	100	7
Compressor x Engine			
Stud bolt	26	265	19.2
Other bolts and nut	52	530	38.3
Receiver x Liquid tube	5.4	55	48 in.·lbf
Condenser x Liquid tube	10	100	7
Condenser x Discharge hose	10	100	7
Expansion valve x Evaporator	5.4	55	48 in.·lbf
A/C unit x Liquid and suction tube	10	100	7
Pressue switch x Liquid tube	10	100	7
Condenser upper mounting x Body	4.1	42	36 in.·lbf
Pressure plate x Compressor	14	140	10
ECT switch x radiator	7.4	75	65 in.·lbf
PS vane pump set bolt	58	590	42
Liquid lines	10	100	7
Discharge lines	10	100	7
Suction lines	10	100	7

TROUBLESHOOTING

TC037-01

PROBLEM SYMPTOMS TABLE

HINT:

Before troubleshooting the turbocharger, first check the engine itself. (Valve clearance, engine compression, ignition timing etc.)

1. INSUFFICIENT ACCELERATION, LACK OF POWER OR EXCESSIVE FUEL CONSUMPTION

(Possible Cause)	(Check Procedure and Correction Method)
1. TURBOCHARGING PRESSURE TOO LOW	Check turbocharging pressure. (See page TC-5) **Turbocharging pressure:** **61 - 75 kPa** **(0.62 - 0.76 kgf/cm^2, 8.8 - 10.8 psi)** If the pressure is below specifications, begin diagnosis from item 2.
2. RESTRICTED INTAKE SYSTEM	Check intake air system, and repair or replace parts as necessary. (See page TC-5)
3. LEAK IN INTAKE AIR SYSTEM	Check intake air system, and repair or replace parts as necessary. (See page TC-5)
4. RESTRICTED EXHAUST SYSTEM	Check exhaust system, and repair or replace parts as necessary. (See page TC-5)
5. LEAK IN EXHAUST SYSTEM	Check exhaust system, and repair or replace parts as necessary. (See page TC-5)
6. ERRATIC TURBOCHARGER OPERATION	Check rotation of turbine shaft. If it does not turn or turns with a heavy drag, replace the turbocharger assembly. Check axial and radial play of turbine shaft. (See page TC-18) **Maximum axial play : 0.110 mm (0.0045 in.)** **Maximum radial play: 0.173 mm (0.0068 in.)** If the play is greater than maximum, replace the turbocharger assembly.

2. ABNORMAL NOISE

(Possible cause)	(Check Procedure and Correction Method)
1. TURBOCHARGING HEAT INSULATOR	Check for loose, improperly installed or deformed insulator mounting bolts, and repair or replace as necessary.
2. EXHAUST PIPE LEAKING VIBRATING	Check for deformed exhaust pipe, loose mounting bolts or damaged gasket, and repair or replace as necessary.
3. ERRATIC TURBOCHARGER OPERATION	Refer to item 6 of INSUFFICIENT ACCELERATION, LACK OF POWER OR EXCESSIVE FUEL CONSUMPTION.

3. EXCESSIVE OIL CONSUMPTION OR WHITE EXHAUST

(Possible Cause)	(Check Procedure and Correction Method)
FAULTY TURBOCHARGER SEAL	Check for oil leakage in exhaust system ◆Remove the turbine elbow from the turbocharger and check for excessive carbon deposits on the turbine wheel. Excessive carbon deposits indicate a faulty turbocharger. Check for oil leakage in intake air system. ◆Check for axial and radial play of turbine shaft and replace the turbocharger if necessary. (See page TC-18) **Maximum axial play : 0.110 mm (0.0045 in.)** **Maximum radial play : 0.173 mm (0.0068 in.)** **NOTICE:** **Some oil mist in the blowby from the PCV is normal.** **Do not mistake it for an oil leak from the turbocharger.**

TURBOCHARGER

TC00A-01

PRECAUTION

1. **DO NOT STOP ENGINE IMMEDIATELY AFTER PULLING A TRAILER OR AFTER HIGH SPEED OR UPHILL DRIVING. IDLE ENGINE FOR 20 - 120 SECONDS, DEPENDING ON HOW HARD VEHICLE HAS BEEN DRIVEN**
2. **AVOID SUDDEN ACCELERATION OR RACING IMMEDIATELY AFTER STARTING A COLD ENGINE**

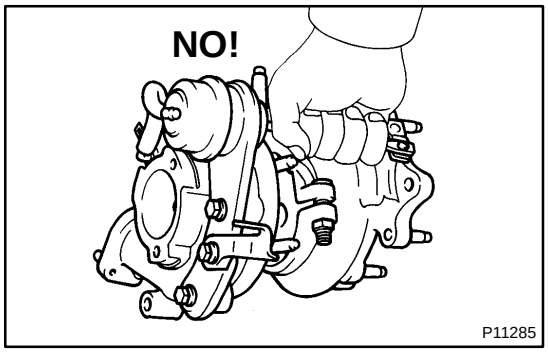

3. **DO NOT RUN ENGINE WITH AIR CLEANER REMOVED, AS THIS MAY CAUSE FOREIGN MATERIAL TO ENTER AND DAMAGE IMPELLER WHEEL OPERATING AT HIGH SPEED**
4. **IF A TURBOCHARGER IS FOUND TO BE DEFECTIVE AND MUST BE REPLACED, CHECK FOR CAUSE, AND REPAIR OR REPLACE FOLLOWING ITEMS AS NECESSARY**
   - Engine oil level and quality
   - Conditions under which the turbocharger was used
   - Oil lines leading to the turbocharger

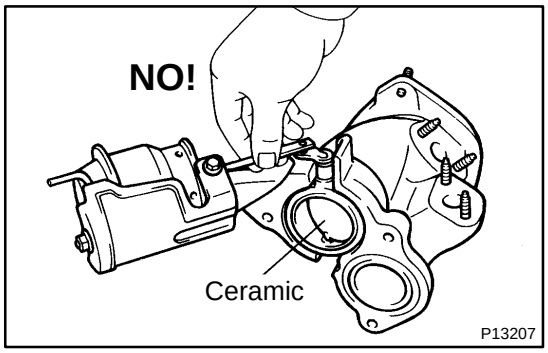

5. **USE CAUTION WHEN REMOVING AND REINSTALLING TURBOCHARGER ASSEMBLY. DO NOT DROP IT OR KNOCK IT AGAINST ANYTHING OR GRASP IT BY EASILY-DEFORMED PARTS, SUCH AS ACTUATOR OR ROD, WHEN MOVING IT**
6. **USE CAUTION WHEN REMOVING AND REINSTALLING EXHAUST GAS CONTROL VALVE ASSEMBLY. DO NOT DROP IT OR KNOCK IT AGAINST ANYTHING OR GRASP IT BY EASILY-DEFORMED PARTS, SUCH AS ACTUATOR OR ROD, WHEN MOVING IT. CONTROL VALVE IS CERAMIC**
7. **BEFORE REMOVING TURBOCHARGER, PLUG INTAKE AND EXHAUST PORTS AND OIL INLET TO PREVENT ENTRY OF DIRT OR OTHER FOREIGN MATERIAL**

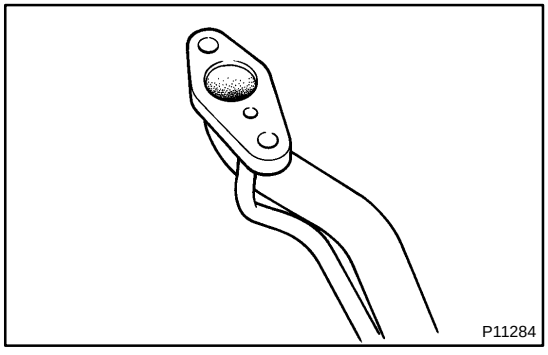

8. **IF REPLACING TURBOCHARGER, CHECK FOR ACCUMULATION OF SLUDGE PARTICLES IN OIL PIPES, AND IF NECESSARY, REPLACE OIL PIPES**
9. **COMPLETELY REMOVE GASKET ADHERED TO LUBRICATION OIL PIPE FLANGE AND TURBOCHARGER OIL FLANGE**
10. **WHEN REPLACING BOLT OR NUTS, USE ONLY AUTHORIZED REPLACEMENT PARTS TO PREVENT BREAKAGE OR DEFORMATION**

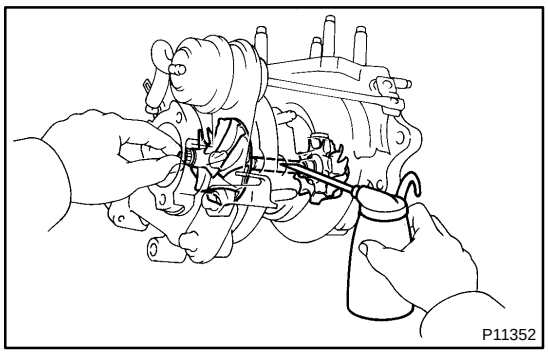

11. IF REPLACING TURBOCHARGER, POUR APPROX. 20 cm^3 (1.2 cu in.) OF FRESH OIL INTO TURBOCHARGER OIL INLET AND TURN IMPELLER WHEEL BY HAND TO SPREAD OIL TO BEARING

12. IF OVERHAULING OR REPLACING ENGINE, CUT FUEL SUPPLY AFTER REASSEMBLY AND CRANK ENGINE FOR 30 SECONDS TO DISTRIBUTE OIL THROUGHOUT ENGINE. THEN ALLOW ENGINE TO IDLE FOR 60 SECONDS

TC00C-01

ON-VEHICLE INSPECTION

1. INSPECT INTAKE AIR SYSTEM

Check for leakage or clogging between the air cleaner and turbocharger inlet and between the turbocharger outlet and cylinder head.

- Clogged air cleaner ..Clean or replace air filter
- Hoses collapsed or deformed .... Repair or replace
- Leakage from connections .... Check each connection and repair
- Cracks in components .... Check and replace

2. INSPECT EXHAUST SYSTEM

Check for leakage or clogging between the cylinder head and turbocharger inlet and between the turbocharger outlet and exhaust pipe.

- Deformed components .... Repair or replace
- Foreign material in passages .... Remove
- Leakage from components .... Repair or replace
- Cracks in components .... Check and replace

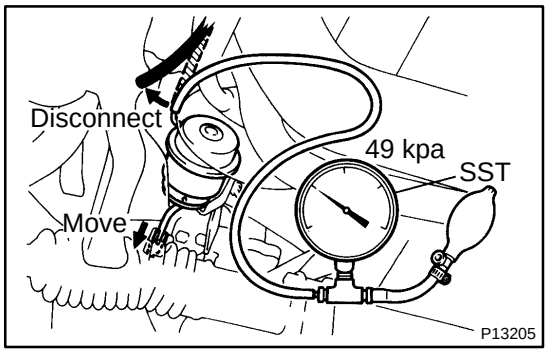

3. INSPECT EXHAUST GAS CONTROL VALVE OPERATION

(a) Disconnect the air hose from the actuator.
(b) Using SST, apply approx. 49 kPa (0.50 kgf/cm^2, 7.1 psi) of pressure to the actuator.
SST 09992-00242
(c) Check that the actuator push rod moves.
(d) Reconnect the air hose to the actuator.

If operation is not as specified, replace the control valve assembly.

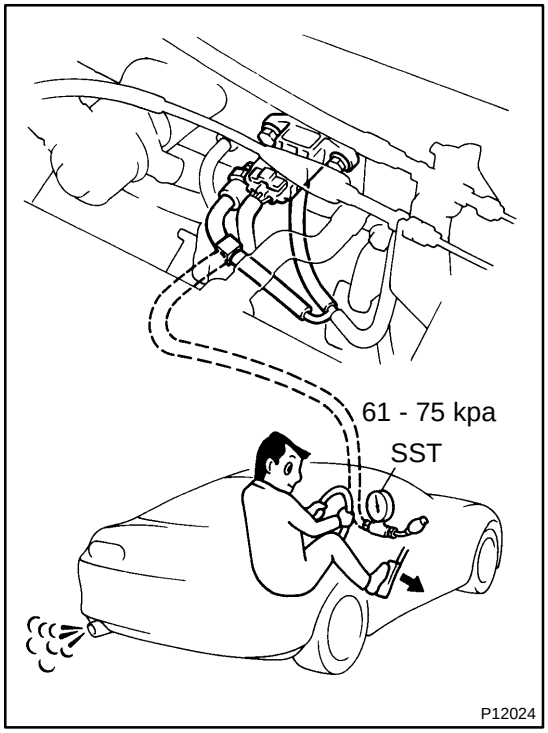

4. INSPECT TURBOCHARGING PRESSURE

(a) Using a 3-way connector, connect SST (turbocharger pressure gauge) to the hose between the gas filter and turbo pressure sensor.
SST 09992-00242
(b) While driving with the engine running at 5,600 rpm or more with the throttle valve fully open in the 1st gear/L range, check the turbocharging pressure.
Standard pressure:
61 - 75 kPa (0.62 - 0.76 kgf/cm^2, 8.8 - 10.8 psi)

If the pressure is less than that specified, check the intake and exhaust systems for leakage. If there is no leakage, replace the turbocharger assembly.

If the pressure is above specification, check if the actuator hose is disconnected or cracked. If not, replace the turbocharger assembly.

5. **INSPECT VSV FOR INTAKE AIR CONTROL VALVE**
   (See page SF-61)
6. **INSPECT VSV FOR WASTE GATE VALVE**
   (See page SF-63)
7. **INSPECT VSV FOR EXHAUST GAS CONTROL VALVE**
   (See page SF-65)
8. **INSPECT VSV FOR EXHAUST BYPASS VALVE**
   (See page SF-67)
9. **INSPECT TURBO PRESSURE SENSOR**
   (See page SF-79)

COMPONENTS

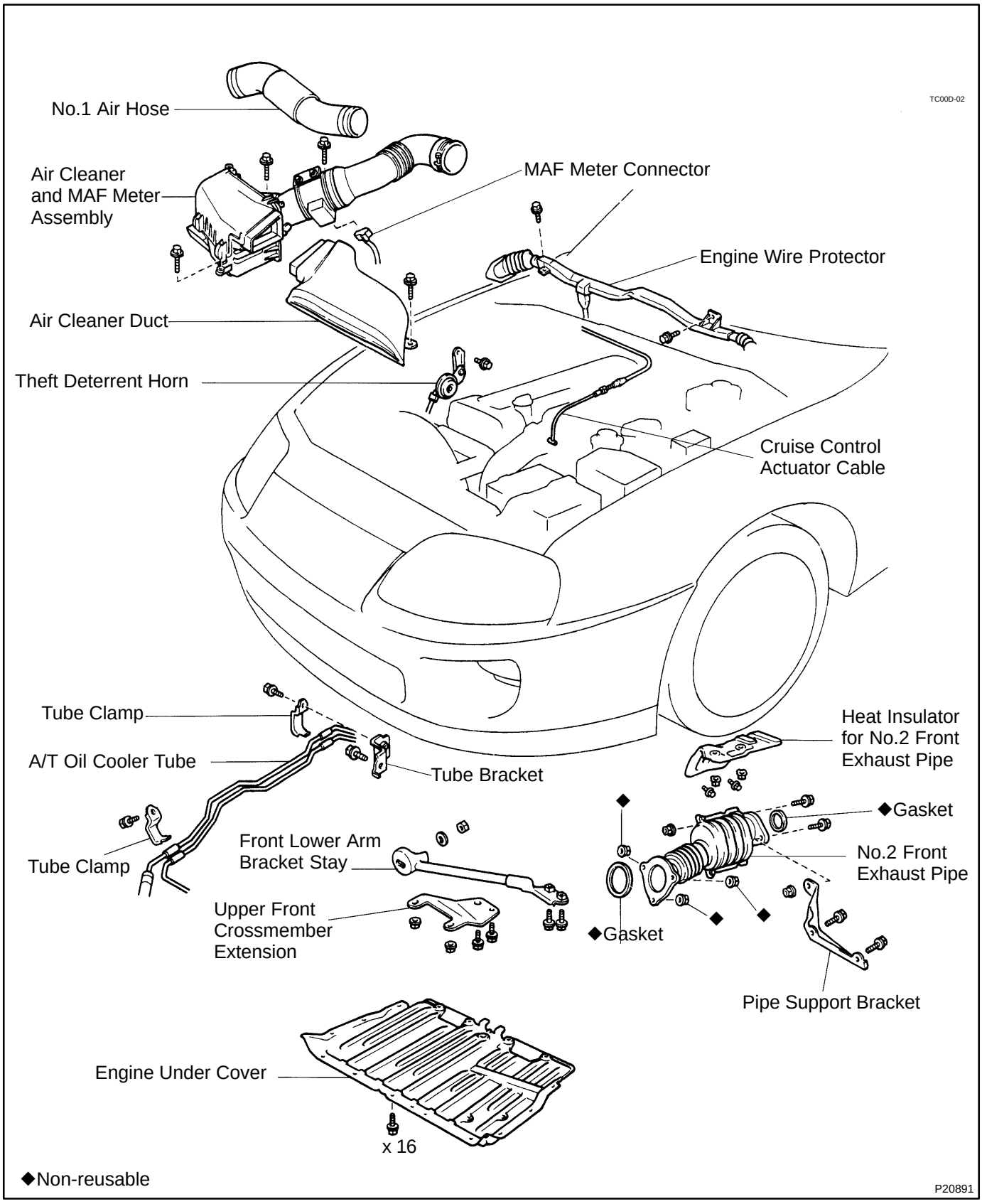
TC00D-02
No.1 Air Hose
Air Cleaner and MAF Meter Assembly
MAF Meter Connector
Engine Wire Protector
Air Cleaner Duct
Theft Deterrent Horn
Cruise Control Actuator Cable
Tube Clamp
A/T Oil Cooler Tube
Tube Bracket
Heat Insulator for No.2 Front Exhaust Pipe
◆Gasket
No.2 Front Exhaust Pipe
Tube Clamp
Front Lower Arm Bracket Stay
Upper Front Crossmember Extension
◆Gasket
Pipe Support Bracket
Engine Under Cover
x 16
◆Non-reusable
P20891

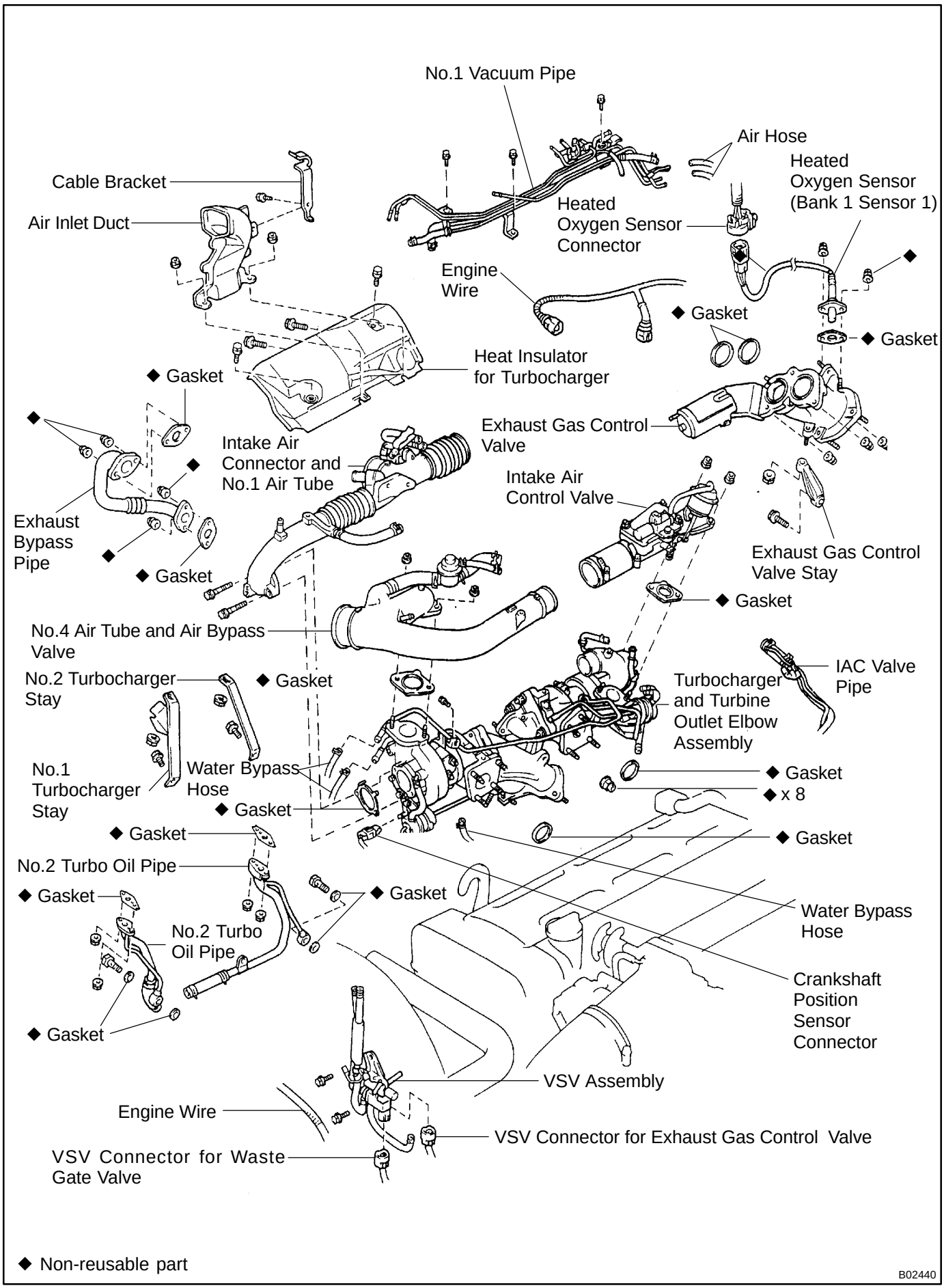
No.1 Vacuum Pipe
Air Hose
Heated Oxygen Sensor (Bank 1 Sensor 1)
Cable Bracket
Air Inlet Duct
Heated Oxygen Sensor Connector
Engine Wire
◆ Gasket
◆ Gasket
Heat Insulator for Turbocharger
◆ Gasket
Exhaust Gas Control Valve
Intake Air Connector and No.1 Air Tube
Intake Air Control Valve
Exhaust Bypass Pipe
◆ Gasket
Exhaust Gas Control Valve Stay
◆ Gasket
No.4 Air Tube and Air Bypass Valve
No.2 Turbocharger Stay
◆ Gasket
IAC Valve Pipe
Turbocharger and Turbine Outlet Elbow Assembly
No.1 Turbocharger Stay
Water Bypass Hose
◆ Gasket
◆ Gasket
◆ x 8
◆ Gasket
◆ Gasket
No.2 Turbo Oil Pipe
◆ Gasket
◆ Gasket
Water Bypass Hose
No.2 Turbo Oil Pipe
Crankshaft Position Sensor Connector
◆ Gasket
VSV Assembly
Engine Wire
VSV Connector for Exhaust Gas Control Valve
VSV Connector for Waste Gate Valve
◆ Non-reusable part
B02440

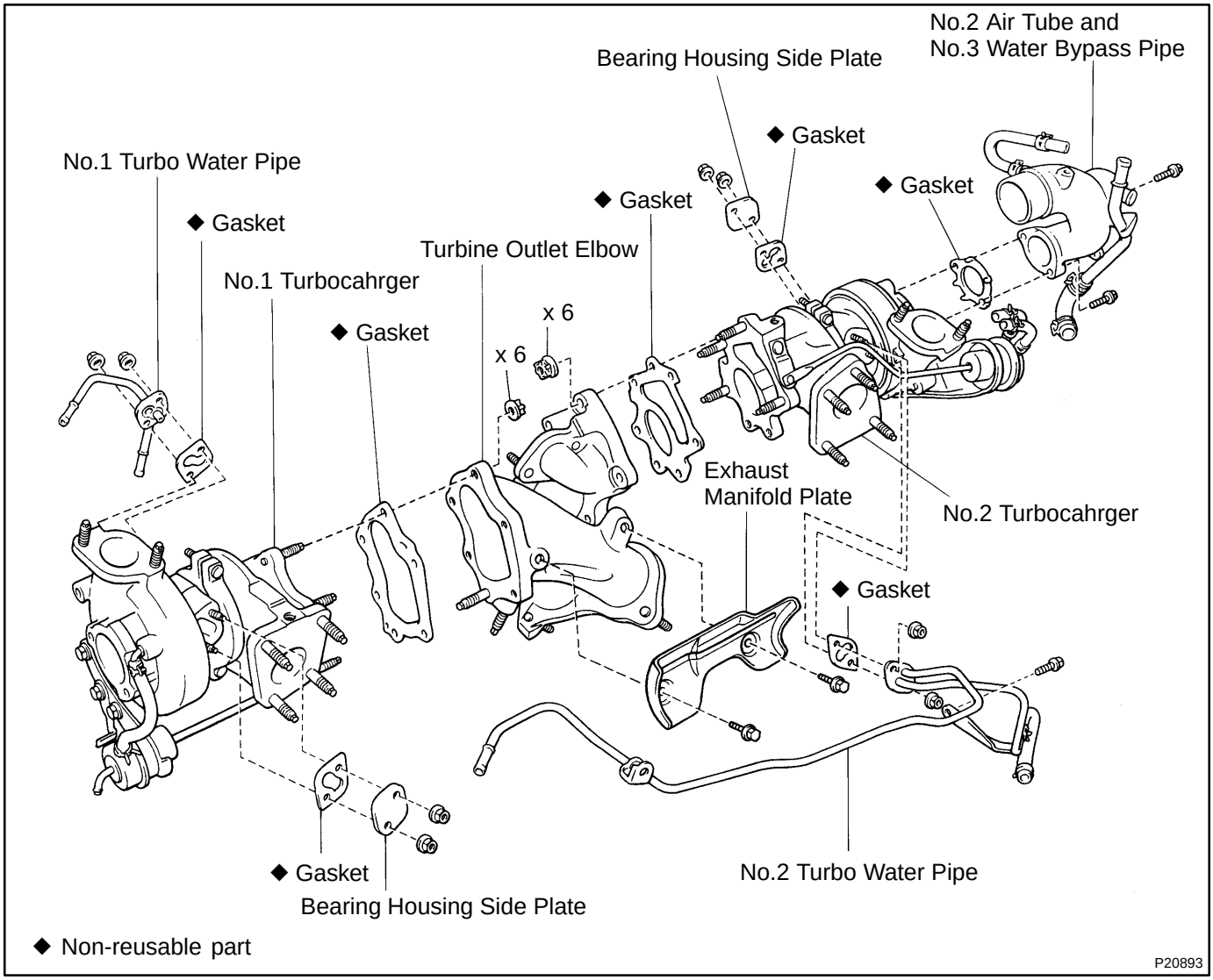
No.2 Air Tube and
No.3 Water Bypass Pipe
Bearing Housing Side Plate
◆ Gasket
No.1 Turbo Water Pipe
◆ Gasket
◆ Gasket
◆ Gasket
Turbine Outlet Elbow
No.1 Turbocahrger
x 6
◆ Gasket
x 6
Exhaust
Manifold Plate
No.2 Turbocahrger
◆ Gasket
◆ Gasket
Bearing Housing Side Plate
No.2 Turbo Water Pipe
◆ Non-reusable part
P20893

TC00E-02

REMOVAL

1. DRAIN ENGINE COOLANT
2. REMOVE ENGINE UNDER COVER
3. DISCONNECT CRUISE CONTROL ACTUATOR CABLE FROM THROTTLE BODY
4. REMOVE NO.1 AIR HOSE
5. REMOVE AIR CLEANER DUCT

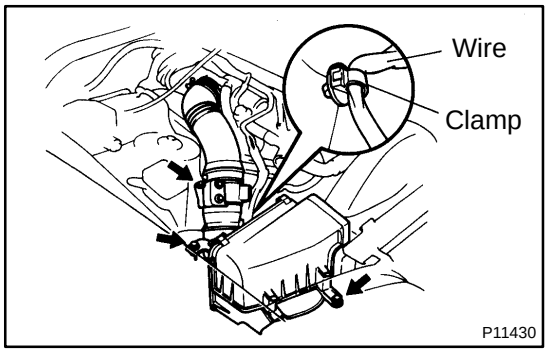

6. REMOVE AIR CLEANER AND MAF METER ASSEMBLY

(a) Remove the 3 bolts.
(b) Loosen the hose clamp, disconnect the air hose from the intake air connector.
(c) Disconnect the MAF meter wire from the clamp on the air cleaner case.
(d) Disconnect the MAF meter connector, and remove the air cleaner and MAF meter assembly.

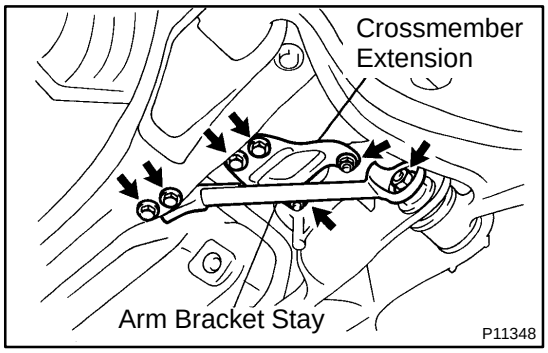

7. DISCONNECT THEFT DETERRENT HORN FROM BODY

8. REMOVE FRONT LOWER ARM BRACKET STAY

Remove the 2 bolts, nut, plate washer and arm bracket stay.

Torque:
Bolts 44 N·m (450 kgf·cm, 33 ft·lbf)
Nut 59 N·m (600 kgf·cm, 43 ft·lbf)

9. REMOVE UPPER FRONT CROSSMEMBER EXTENSION

Remove the 2 bolts, 2 nuts and crossmember extension.

Torque:
Bolts 29 N·m (300 kgf·cm, 22 ft·lbf)
Nuts 33 N·m (340 kgf·cm, 25 ft·lbf)

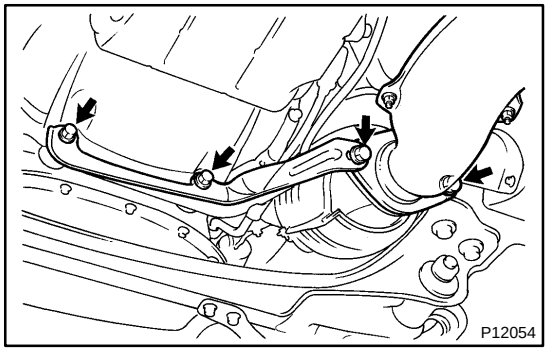

10. REMOVE NO.2 FRONT EXHAUST PIPE

(a) Remove the 2 bolts and nuts holding the front exhaust pipe to the No.2 front exhaust pipe.
Torque: 58 N·m (590 kgf·cm, 43 ft·lbf)
(b) Remove the 2 bolts and pipe support bracket.
Torque: 43 N·m (440 kgf·cm, 32 ft·lbf)
(c) Disconnect the front exhaust pipe from the No.2 exhaust pipe. Remove the gasket.

HINT:
At the time of installation, please refer to the following items.
Use a new gasket.

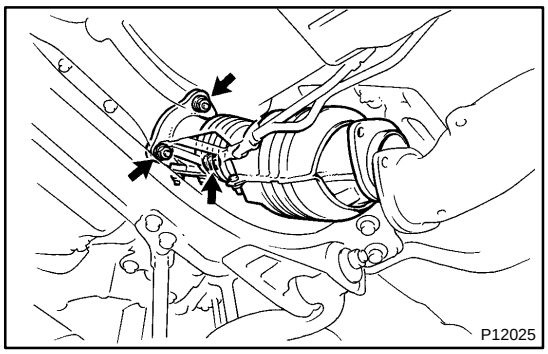

(d) Remove the 3 nuts, No.2 front exhaust pipe and gasket.

HINT:

At the time of installation, please refer to the following items.

Use a new gasket and 3 new nuts.

Torque: 62 N·m (630 kgf·cm, 46 ft·lbf)

11. REMOVE HEAT INSULATOR FOR NO.2 FRONT EXHAUST PIPE

Remove the 2 bolts, 2 nuts and heat insulator.

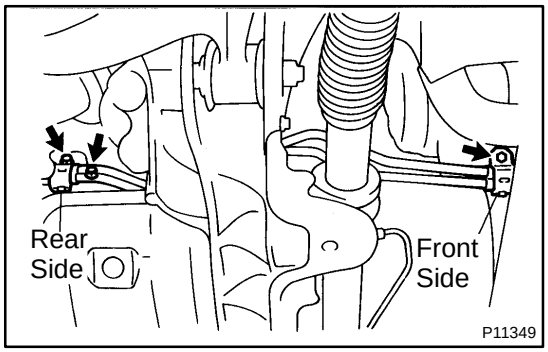

12. DISCONNECT A/T OIL COOLER TUBES FROM ENGINE

(a) Remove the bolt and tube clamp, and disconnect the oil cooler tubes from the bracket (front side) on the generator.

(b) Remove the bolt and tube clamp, and disconnect the oil cooler tubes from the bracket (rear side) on the cylinder block.

(c) Remove the bolt and tube bracket (rear side) from the cylinder block.

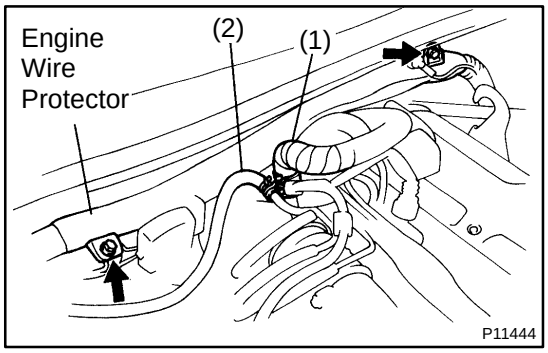

13. DISCONNECT ENGINE WIRE PROTECTOR FROM BODY

Remove the 2 bolts, and disconnect the wire protector from the body.

14. DISCONNECT HOSES

Disconnect these hoses:

(1) Heater hose from No.3 water bypass pipe

(2) EVAP hose from No.1 vacuum pipe

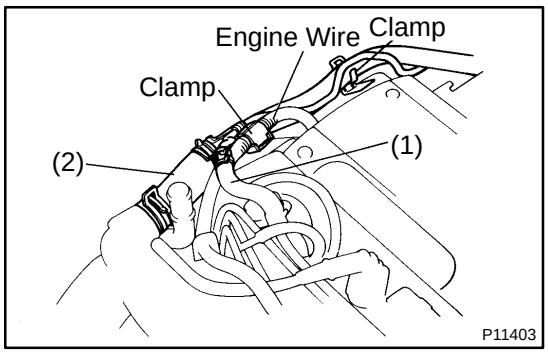

15. DISCONNECT IAC VALVE PIPE FROM NO.2 AIR TUBE

(a) Disconnect the engine wire from the clamp.

(b) Disconnect these hoses:

(1) Air hose (from No.1 vacuum pipe) from IAC valve pipe

(2) Air hose from No.2 air tube

(c) Disconnect the IAC valve pipe from the clamp.

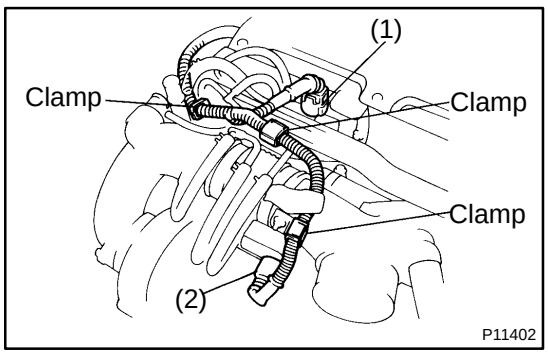

16. DISCONNECT NO.1 VACUUM PIPE FROM AIR TUBES

(a) Disconnect these connectors:

(1) VSV connector for intake air control valve

(2) VSV connector for exhaust bypass valve

(b) Disconnect the engine wire from the 3 clamps.

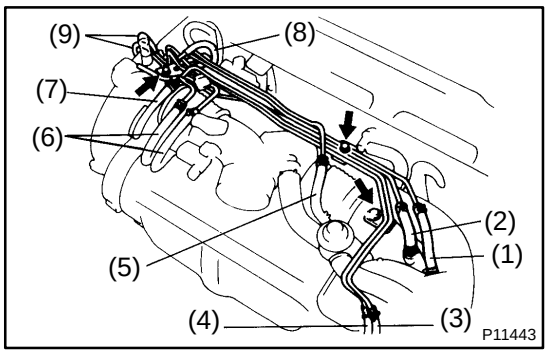

(c) Disconnect these hoses:
- (1) Air hose from No.4 air tube
- (2) Air hose from No.1 air tube
- (3) Air hose (from VSV for waste gate valve) from vacuum pipe
- (4) Air hose (from VSV for exhaust gas control valve) from vacuum pipe
- (5) Vacuum hose (from air bypass valve) from No.1 air tube
- (6) 2 air hoses (from VSV for exhaust bypass valve) from vacuum pipe
- (7) Air hose (from No.2 air tube) from vacuum pipe
- (8) Air hose from VSV for intake air control valve
- (9) 2 air hoses (from pressure tank) from vacuum pipe

(d) Remove the 3 bolts, and disconnect the vacuum pipe from the air tubes.

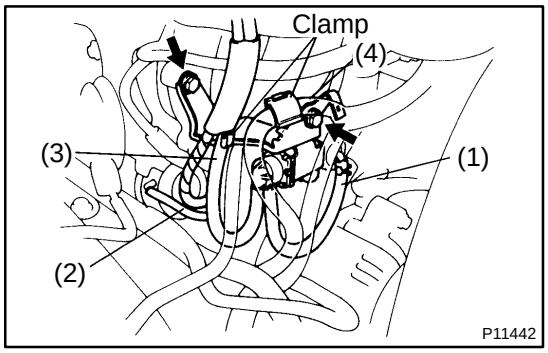

17. REMOVE VSV ASSEMBLY

(a) Disconnect these hoses:
- (1) Air hose from actuator for waste gate valve
- (2) Air hose from actuator for exhaust gas control valve
- (3) Air hose from hose clamp
- (4) Engine wire from wire clamp

(b) Remove the 2 bolts.

(c) Disconnect the 2 VSV connectors, and remove the VSV assembly.

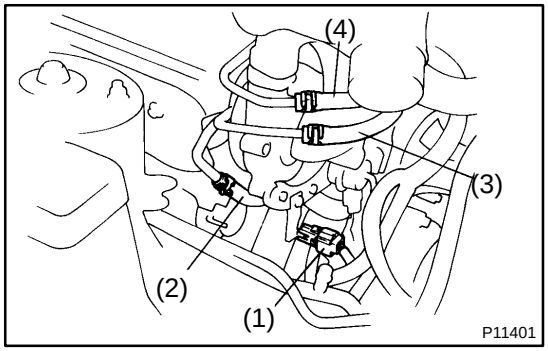

18. REMOVE AIR TUBES AND INTAKE AIR CONNECTOR

(a) Disconnect the connector and hoses:
- (1) Crankshaft position sensor connector from clamp
- (2) Water bypass hose (from water pump) from No.1 turbo water pipe
- (3) Water bypass hose (from water outlet) from No.1 turbo water pipe
- (4) Water bypass hose (from water outlet) from No.2 turbo water pipe

(b) Remove the bolt, and disconnect the No.2 turbo water pipe from the No.4 air tube.

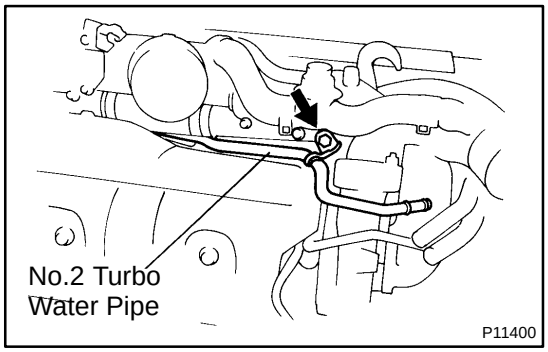

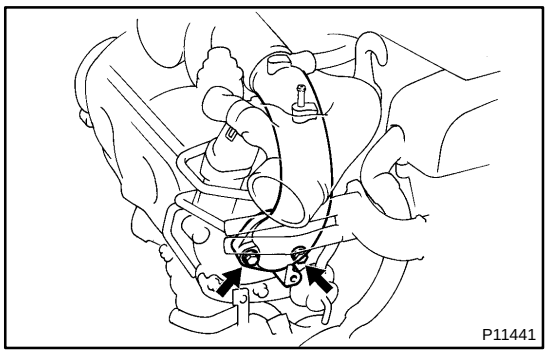

(c) Remove the 2 bolts, and disconnect the No.1 air tube from the No.1 turbocharger. Remove the gasket.

HINT:

At the of installation, please refer to the following items.

Use a new gasket.

Torque: 21 N·m (210 kgf·cm, 15 ft·lbf)

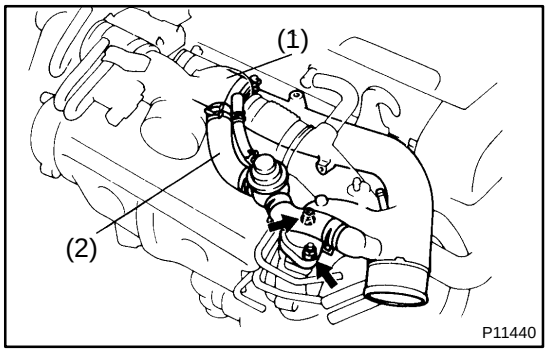

(d) Remove the 2 bolts holding the No.4 air tube to the No.1 turbocharger. Remove the gasket.

HINT:

At the of installation, please refer to the following items.

Use a new gasket.

Torque: 21 N·m (210 kgf·cm, 15 ft·lbf)

(e) Disconnect these hoses, and remove the No.4 air tube and air bypass valve assembly.

(1) Air hose from No.4 air tube

(2) Air hose from intake air connector

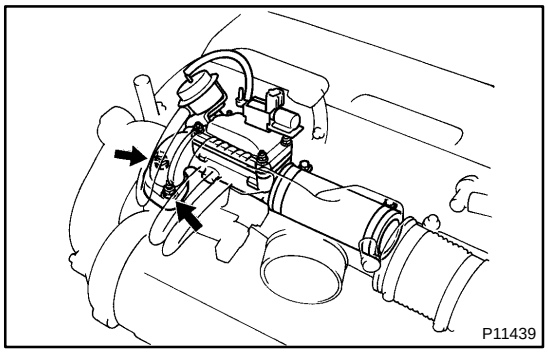

(f) Remove the 2 nuts, intake air control valve and gasket.

HINT:

At the of installation, please refer to the following items.

Use a new gasket.

Torque: 21 N·m (210 kgf·cm, 15 ft·lbf)

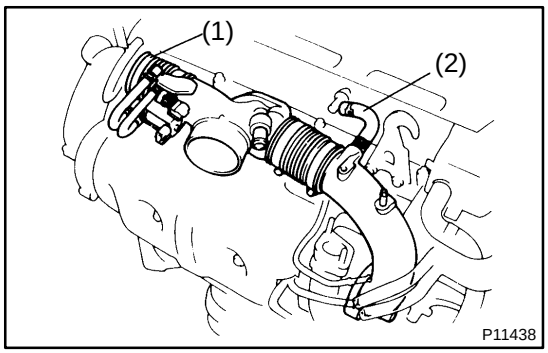

(g) Disconnect these hoses, and remove the intake air connector and No.1 air tube assembly.

(1) Air hose from No.2 air tube

(2) PCV hose from No.2 cylinder head cover

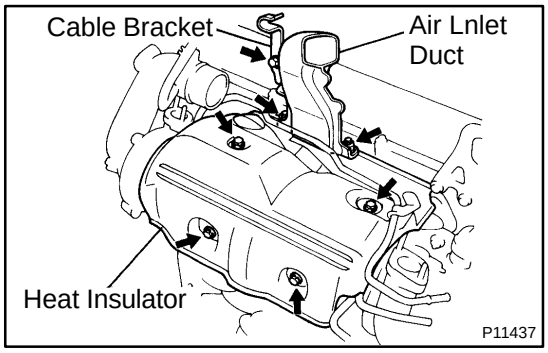

19. REMOVE AIR INLET DUCT

Remove the bolt, 2 nuts, cable bracket and air inlet duct.

20. REMOVE HEAT INSULATOR FOR TURBOCHARGER

Remove the 4 bolts and heat insulator.

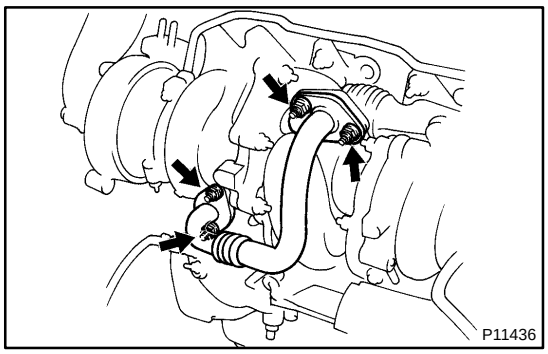

21. REMOVE EXHAUST BYPASS PIPE

Remove the 4 nuts, bypass pipe and 2 gaskets.

HINT:

At the time of installation, please refer to the following items.

Use 2 new gaskets and 4 new nuts.

Torque: 25 N·m (250 kgf·cm, 18 ft·lbf)

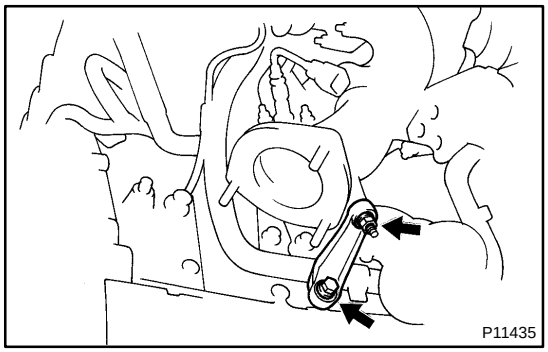

22. REMOVE EXHAUST GAS CONTROL VALVE STAY

Remove the bolt, nut and valve stay.

Torque: 43 N·m (440 kgf·cm, 32 ft·lbf)

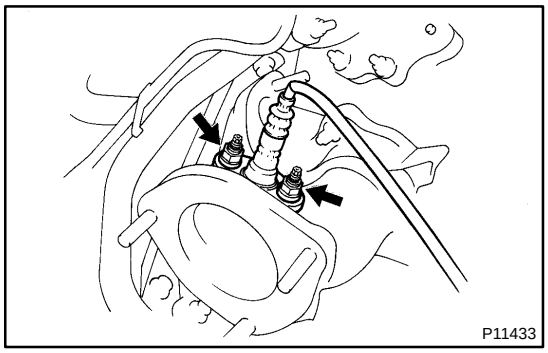

23. REMOVE HEATED OXYGEN SENSOR

(a) Disconnect the oxygen sensor connector.

(b) Remove the 2 nuts, oxygen sensor (bank 1 sensor 1) and gasket.

HINT:

At the time of installation, please refer to the following items.

Use a new gasket and 2 new nuts.

Torque: 20 N·m (200 kgf·cm, 14 ft·lbf)

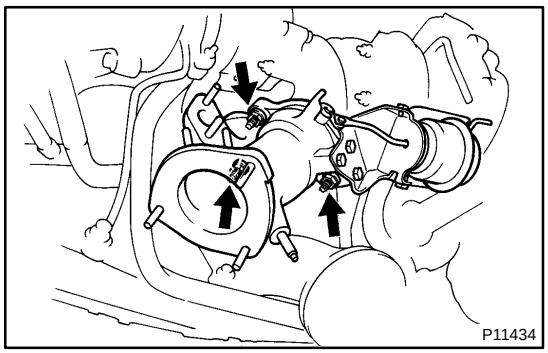

24. REMOVE EXHAUST GAS CONTROL VALVE

Remove the 3 nuts, control valve and 2 gaskets.

NOTICE:

The control valve is ceramic. Do not drop or knock the control valve.

HINT:

At the time of installation, please refer to the following items.

Use 2 new gaskets and 3 new nuts.

Torque: 69 N·m (700 kgf·cm, 51 ft·lbf)

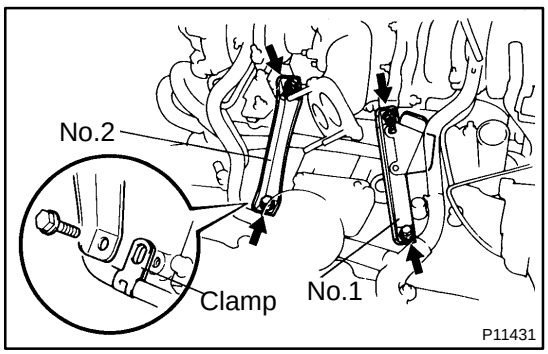

25. REMOVE NO.1 TURBOCHARGER STAY

Remove the bolt, nut and turbocharger stay.

Torque: 43 N·m (440 kgf·cm, 32 ft·lbf)

26. REMOVE NO.2 TURBOCHARGER STAY

Remove the bolt, nut and turbocharger stay.

HINT:

At the time of installation, please refer to the following items.

Install the turbocharger stay and No.1 turbo oil pipe clamp with the bolt and nut.

Torque: 43 N·m (440 kgf·cm, 32 ft·lbf)

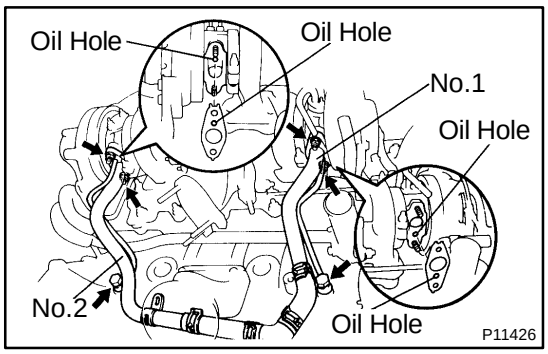

27. REMOVE NO.1 TURBO OIL PIPE

(a) Remove the union bolt holding the turbo oil pipe to the cylinder block. Remove the 2 gaskets.

HINT:

At the time of installation, please refer to the following items.
Use 2 new gaskets.

Torque: 39 N·m (400 kgf·cm, 29 ft·lbf)

(b) Remove the 2 nuts, and disconnect the turbo oil pipe from turbocharger. Remove the gasket.

HINT:

- At the time of installation, please refer to the following items.
- Use a new gasket.
- Align the oil holes of the gasket and turbocharger housing.

Torque: 21 N·m (210 kgf·cm, 15 ft·lbf)

(c) Disconnect the turbo oil hose from the turbo oil outlet on the No.1 oil pan, and remove the turbo oil pipe.

28. REMOVE NO.2 TURBO OIL PIPE

(a) Remove the union bolt holding the turbo oil pipe to the cylinder block. Remove the 2 gaskets.

HINT:

At the time of installation, please refer to the following items.
Use 2 new gaskets.

Torque: 39 N·m (400 kgf·cm, 29 ft·lbf)

(b) Remove the 2 nuts, and disconnect the turbo oil pipe from turbocharger. Remove the gasket.

HINT:

- At the time of installation, please refer to the following items.
- Use a new gasket.
- Align the oil holes of the gasket and turbocharger housing.

Torque: 21 N·m (210 kgf·cm, 15 ft·lbf)

(c) Disconnect the turbo oil hose from the turbo oil outlet on the No.1 oil pan, and remove the turbo oil pipe.

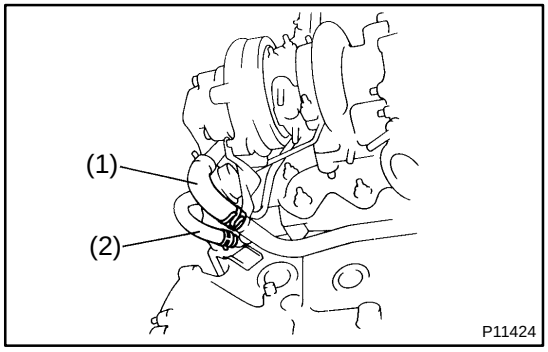

29. REMOVE TURBOCHARGERS AND TURBINE OUTLET ELBOW ASSEMBLY

(a) Disconnect these hoses:

(1) Heater hose (from No.3 water bypass pipe) from No.2 water bypass pipe

(2) Water bypass hose (from No.2 turbo water pipe) from No.2 water bypass pipe

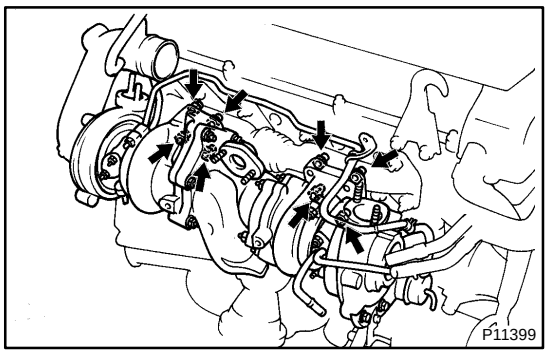

(b) Remove the 8 nuts holding the turbochargers to the exhaust manifold.

HINT:

- At the time of installation, please refer to the following items.
- Use 8 new nuts.
- Uniformly tighten the nuts in several passes.

Torque: 54 N·m (550 kgf·cm, 40 ft·lbf)

(c) Remove the 2 turbochargers and turbine outlet elbow assembly.

(d) Remove the 2 gaskets.

HINT:

At the time of installation, please refer to the following items.
Use 2 new gaskets.

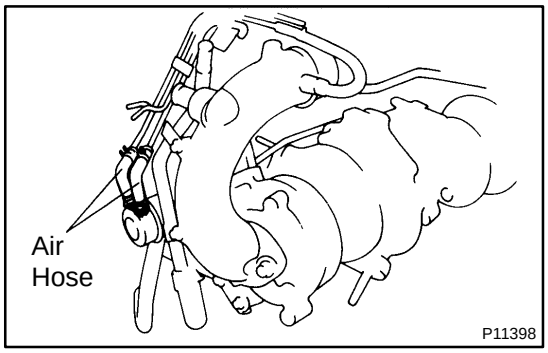

30. REMOVE NO.1 VACUUM PIPE FROM NO.2 TURBOCHARGER

Disconnect the 2 air hoses from the actuator for the exhaust bypass valve, and remove the vacuum pipe.

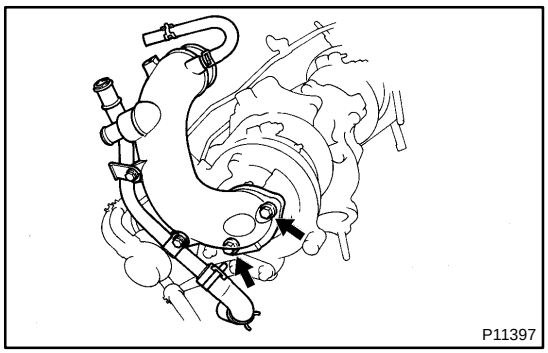

31. REMOVE NO.2 AIR TUBE AND NO.3 WATER BYPASS PIPE ASSEMBLY FROM NO.2 TURBOCHARGER

Remove the 2 bolts, the air tube, bypass pipe assembly and gasket.

HINT:

At the time of installation, please refer to the following items.
Use a new gasket.

Torque: 21 N·m (210 kgf·cm, 15 ft·lbf)

32. REMOVE EXHAUST MANIFOLD PLATE FROM TURBINE OUTLET ELBOW

Remove the 2 bolts and manifold plate.

33. REMOVE NO.2 TURBO WATER PIPE FROM NO.2 TURBOCHARGER

Remove the 2 nuts, water pipe and gasket.

HINT:

At the time of installation, please refer to the following items.
Use a new gasket.

Torque: 8.8 N·m (90 kgf·cm, 78 in.·lbf)

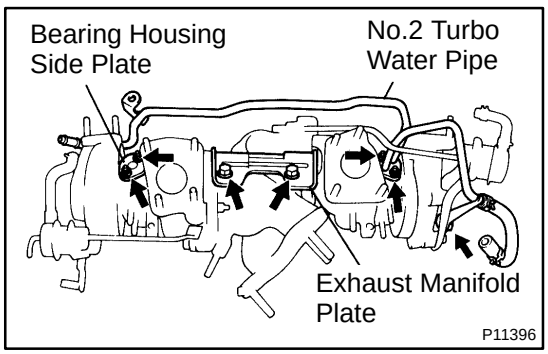

34. REMOVE BEARING HOUSING SIDE PLATE FROM NO.1 TURBOCHARGER

Remove the 2 nuts, housing plate and gasket.
HINT:
At the time of installation, please refer to the following items.
Use a new gasket.

Torque: 8.8 N·m (90 kgf·cm, 78 in.·lbf)

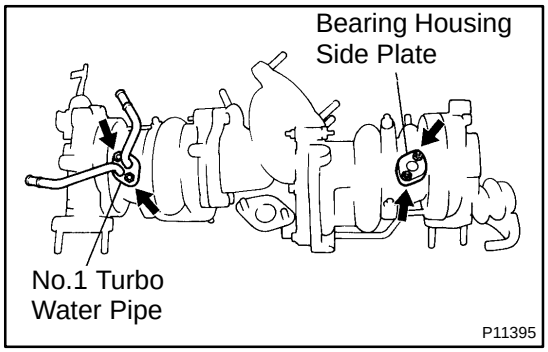

35. REMOVE NO.1 TURBO WATER PIPE FROM NO.1 TURBOCHARGER

Remove the 2 nuts, water pipe and gasket.
HINT:
At the time of installation, please refer to the following items.
Use a new gasket.

Torque: 9.0 N·m (90 kgf·cm, 80 in.·lbf)

36. REMOVE BEARING HOUSING SIDE PLATE FROM NO.2 TURBOCHARGER

Remove the 2 nuts, housing plate and gasket.
HINT:
At the time of installation, please refer to the following items.
Use a new gasket.

Torque: 9.0 N·m (90 kgf·cm, 80 in.·lbf)

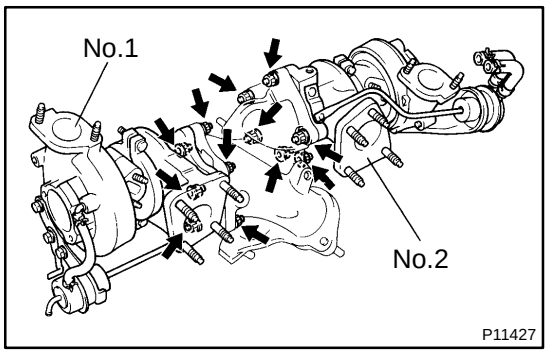

37. REMOVE NO.1 TURBOCHARGER FROM TURBINE OUTLET ELBOW

Remove the 6 nuts, turbocharger and gasket.
HINT:

- At the time of installation, please refer to the following items.
- Use a new gasket and 6 new nuts.
- Uniformly tighten the nuts in several passes.

Torque: 25 N·m (250 kgf·cm, 18 ft·lbf)

38. REMOVE NO.2 TURBOCHARGER FROM TURBINE OUTLET ELBOW

Remove the 6 nuts, turbocharger and gasket.
HINT:

- At the time of installation, please refer to the following items.
- Use a new gasket and 6 new nuts.
- Uniformly tighten the nuts in several passes.

Torque: 25 N·m (250 kgf·cm, 18 ft·lbf)

TC00F-02

INSPECTION

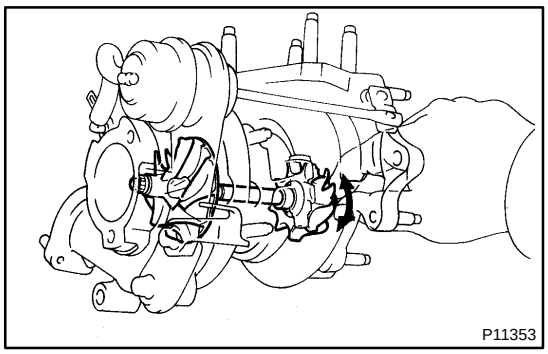

1. INSPECT TURBINE SHAFT ROTATION

Grasp the edge of the turbine wheel and turn it. Check that the impeller wheel turns smoothly.

If the impeller wheel does not turn or if it turns with a drag, replace the turbocharger assembly.

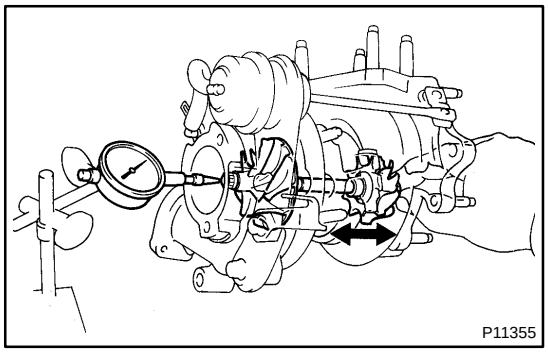

2. INSPECT AXIAL PLAY OF TURBINE SHAFT

(a) Using a dial indicator, insert the needle of the dial indicator into the air tube side.

(b) Move the turbine shaft in an axial direction, measure the axial play of the turbine shaft.

Maximum axial play:
0.110 mm (0.0045 in.)

If the axial play is greater than maximum, replace the turbocharger assembly.

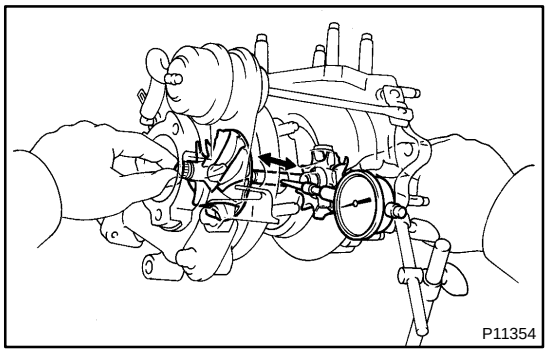

3. INSPECT RADIAL PLAY OF TURBINE SHAFT

(a) Using a dial indicator, insert the needle of the dial indicator into the oil outlet hole and set it in the center of the turbine shaft.

(b) Move the turbine shaft in a radial direction, measure the radial play of the turbine shaft.

Maximum radial play:
0.162 mm (0.0064 in.)

If the axial play is greater than maximum, replace the turbocharger assembly.

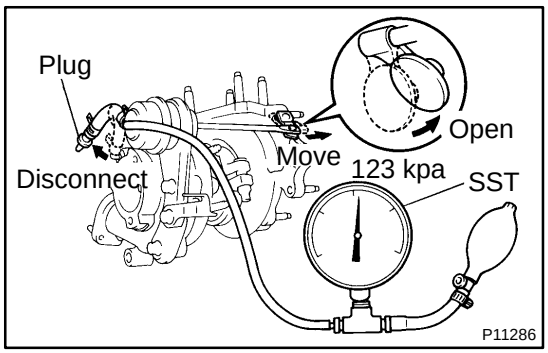

4. INSPECT WASTE GATE VALVE OPERATION

(a) Disconnect the actuator air hose from the housing, and plug the hose end.

(b) Using SST, apply approx. 120 kPa (1.22 kgf/cm^2, 17.4 psi) of pressure to the actuator.

SST 09992-00242

(c) Move the actuator push rod, and check that the waste gate valve is open.

If operation is not as specified, replace the No.1 turbocharger assembly.

NOTICE:

Never apply more than 187 kPa (1.91 kgf/cm^2, 27.2 psi) of pressure to the actuator.

(d) Reconnect the actuator air hose to the housing.

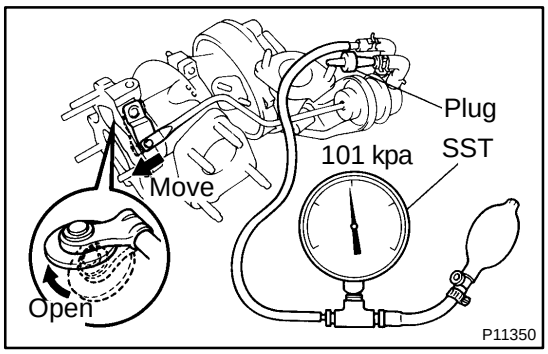

5. INSPECT EXHAUST BYPASS VALVE OPERATION

(a) Plug one side of the actuator air hose end.

(b) Using SST, apply approx. 98 kPa (1.00 kgf/cm^2, 14.2 psi) of pressure to the actuator.
SST 09992 - 00242

(c) Move the actuator push rod, and check that the exhaust bypass valve is open.

If operation is not as specified, replace the No.2 turbocharger assembly.

NOTICE:

Never apply more than 187 kPa (1.91 kgf/cm^2, 27.2 psi) of pressure to the actuator.

(d) Remove the plug from the actuator air hose end.

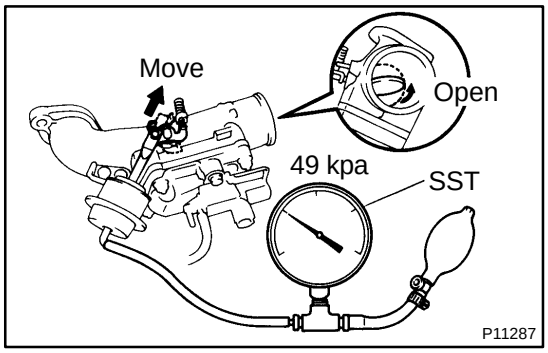

6. INSPECT INTAKE AIR CONTROL VALVE OPERATION

(a) Using SST, apply approx. 49 kPa (0.50 kgf/cm^2, 7.1 psi) of pressure to the actuator.
SST 09992-00242

(b) Move the actuator push rod, and check that the control valve is open.

If operation is not as specified, replace the control valve assembly.

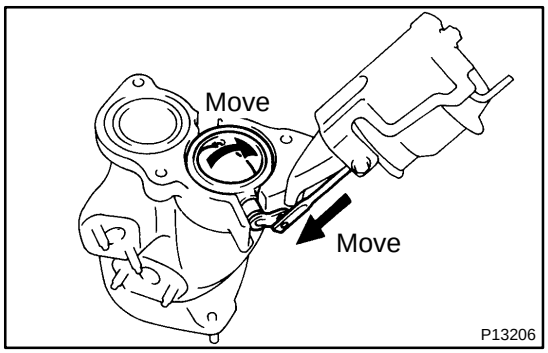

7. INSPECT EXHAUST GAS CONTROL VALVE FOR DAMAGE

Move the actuator push rod and control valve, and check the control valve for damage.

If the valve is damaged, replace the control valve assembly.

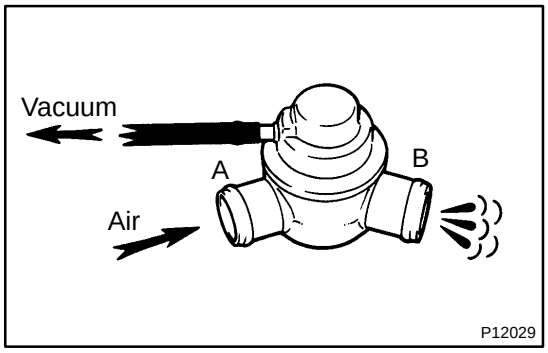

8. INSPECT AIR BYPASS VALVE OPERATION

(a) Check that air does not flow from port A to B.

(b) Apply vacuum to the actuator.

(c) Check that air flows from port A to B.

If operation is not as specified, replace the valve.

TC00G-01

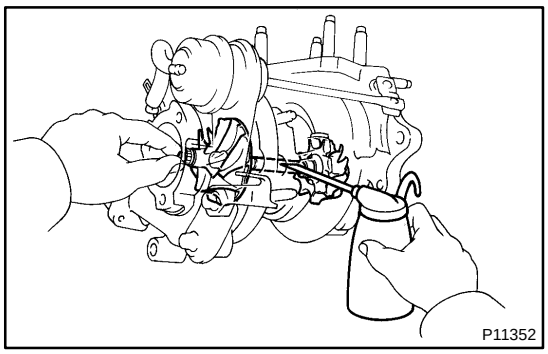

INSTALLATION

Installation is in the reverse order of removal.
(See page TC-10)
NOTICE:
After replacing the turbocharger assembly, pour approx. 20 cm^3 (1.2 cu in.) of fresh oil into the oil inlet hole and turn the turbine wheel by hand to splash oil on the bearing.

PRESSURE TANK

COMPONENTS

TC00H-01

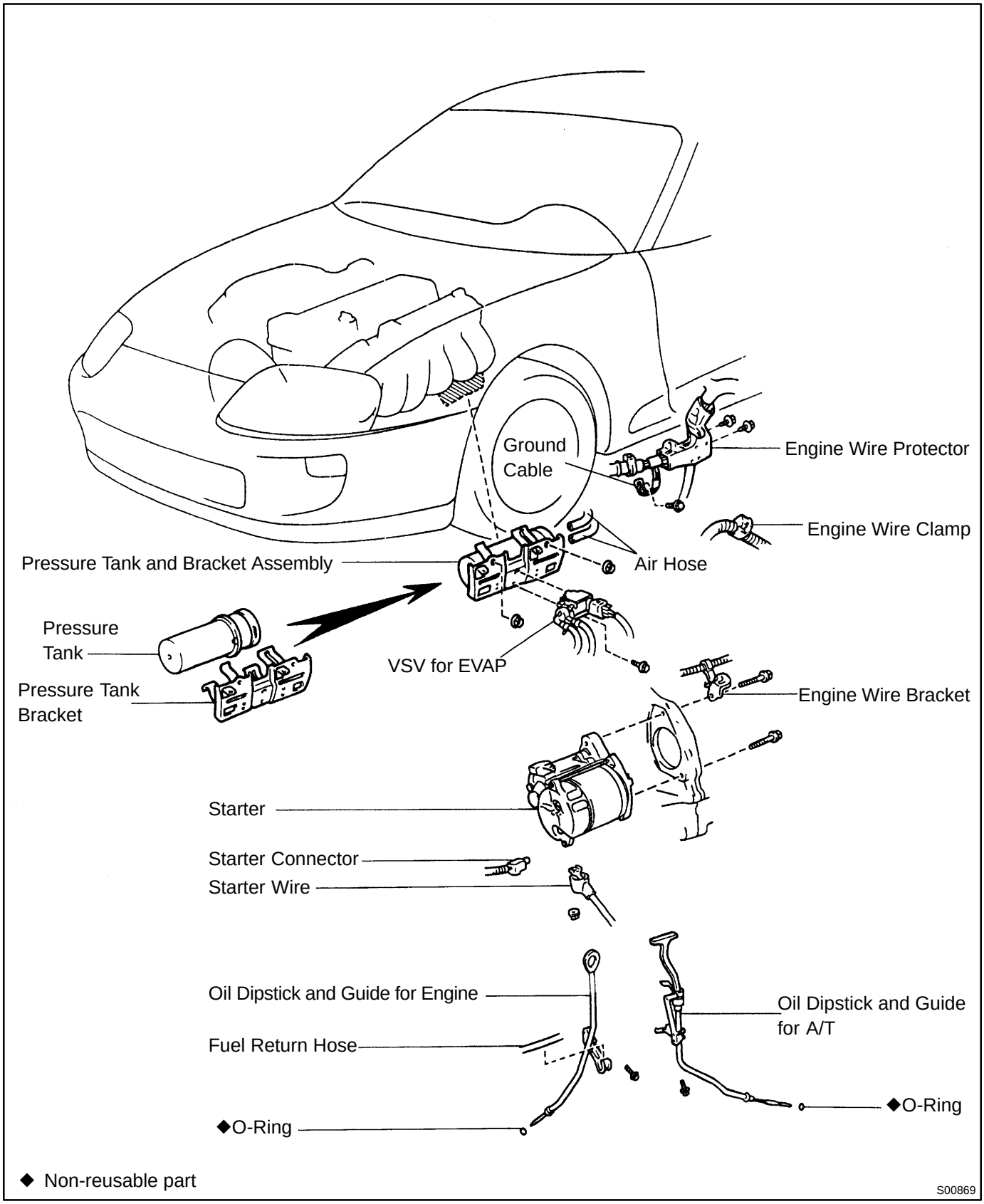

◆ Non-reusable part

S00869

TC00I-01

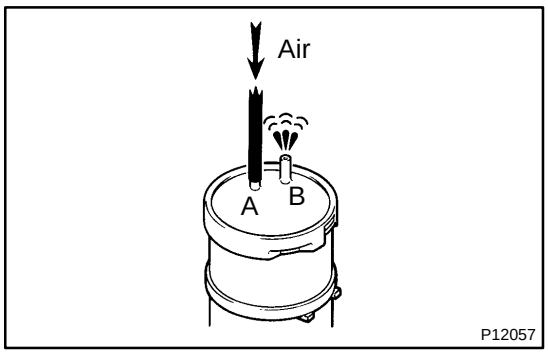

INSPECTION

1. REMOVE PRESSURE TANK

2. INSPECT PRESSURE TANK

(a) Check that air flows from port A to B.

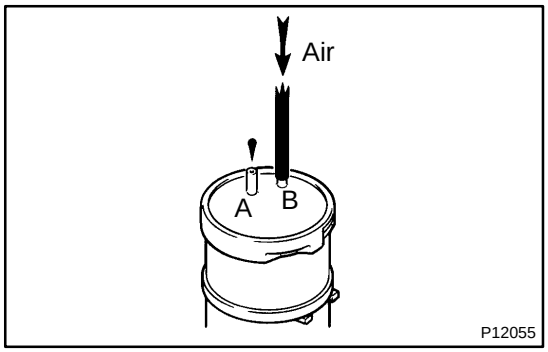

(b) Check that air does not flow from port B to A.

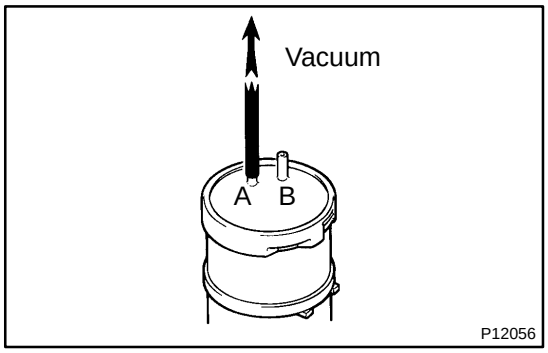

(c) Apply 60.0 kPa (450 mmHg, 17.72 in.Hg) of vacuum to port A, and check that there is no change in vacuum after 1 minute.

If operation is not as specified, replace the pressure tank.

3. REINSTALL PRESSURE TANK

CHARGE AIR COOLER (CAC)

COMPONENTS

TC00J-01

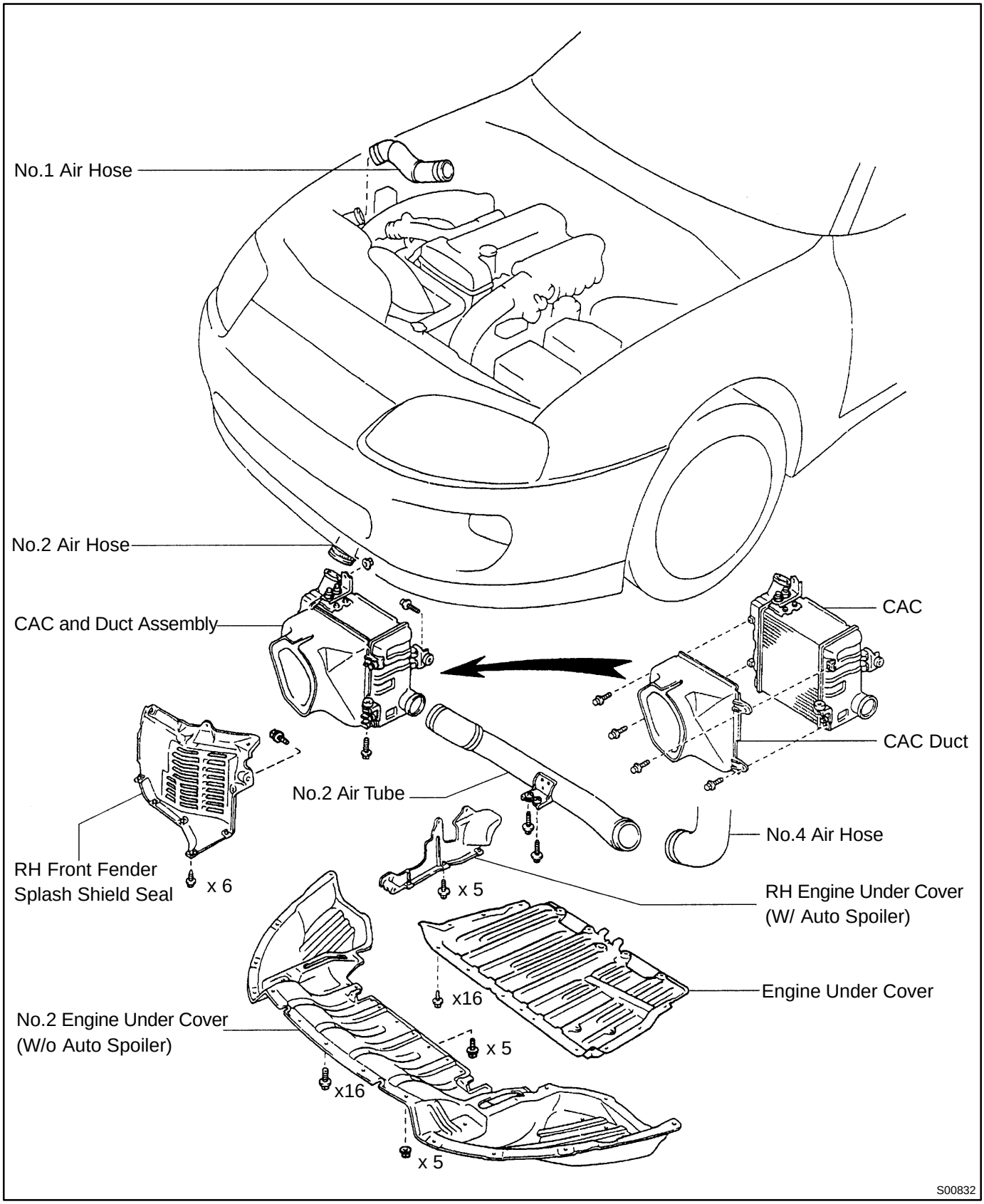

TC00K-02

REMOVAL

1. **REMOVE NO.1 AIR HOSE**
2. **REMOVE ENGINE UNDER COVER**
3. **w/o Auto Spoiler:**
   REMOVE NO.2 ENGINE UNDER COVER
4. **REMOVE RH FRONT FENDER SPLASH SHIELD SEAL**
5. **w/ Auto Spoiler:**
   REMOVE RH ENGINE UNDER COVER

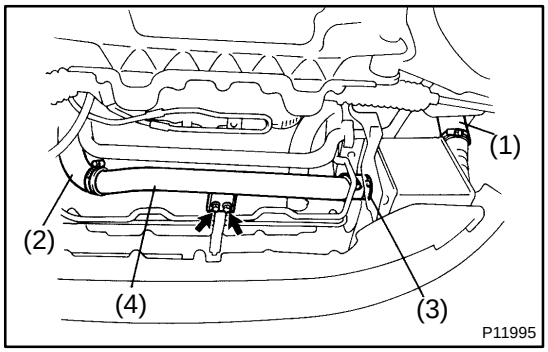

6. **DISCONNECT AIR HOSE FROM CAC**

(a) Remove the 2 bolts holding the No.2 air tube (4) to the body.

(b) Disconnect these hoses:
   (1) No.2 air hose from CAC
   (2) No.4 air hose from No.2 air tube
   (3) No.3 air hose from CAC

(c) Remove the No.2 air tube (4).

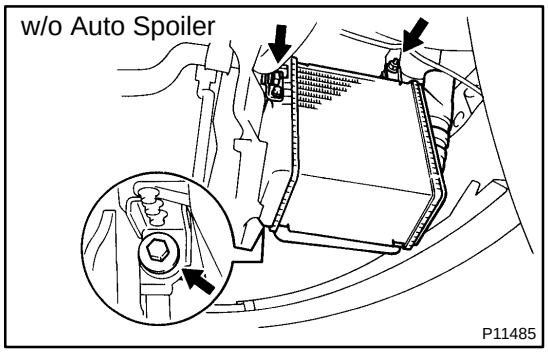

7. **w/o Auto Spoiler:**
   REMOVE CAC AND CAC DUCT ASSEMBLY

Remove the nut, 2 bolts and CAC.

Torque: 13 N·m (135 kgf·cm, 10 ft·lbf)

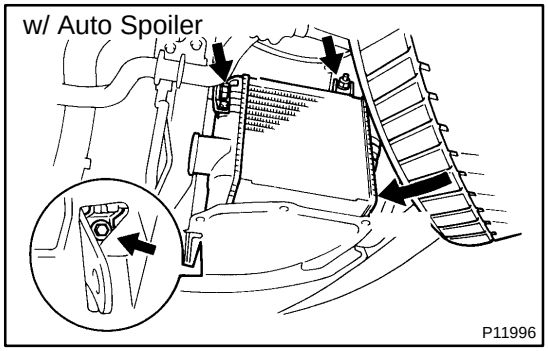

8. **w/ Auto Spoiler:**

(a) Fully turn the tire in the illustration direction.

(b) Remove the nut, 2 bolts and CAC.

Torque: 13 N·m (135 kgf·cm, 10 ft·lbf)

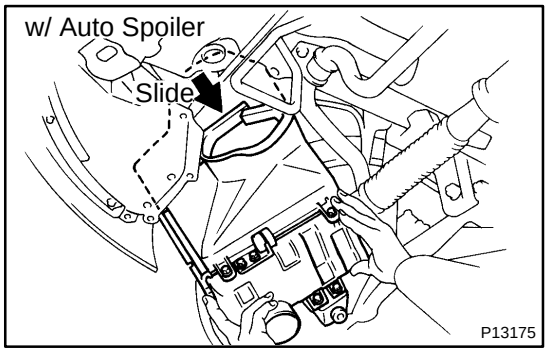

HINT:

Remove the CAC between the suspension and body at the illustrated angle of the CAC.

9. **REMOVE CAC DUCT FROM CAC**

Remove the 4 bolts and CAC duct.

Torque: 4.9 N·m (50 kgf·cm, 43 in.·lbf)

TERMINAL REPLACEMENT

These steps **must** be followed when replacing a terminal.

Step 1. Identify the connector and the terminal type.



Step 2. Disconnect the terminal from the connector.



Step 3. Replace the terminal.



Step 4. Install the terminal into the connector.

FOREWORD

This manual has been prepared for use when performing terminal repairs, wire repairs, or connector repairs on vehicles.

A step–by–step section on connector repair and terminal repair is included.

There is a section of charts with terminal and connector illustrations, part numbers, and notes on terminal removal.

By using this guide, a satisfactory repair of the wiring harness and connectors in Toyota vehicles will be easy to achieve.

All information in this manual is based on the latest product information at the time of publication. However, specifications and procedures are subject to change without notice.

TOYOTA MOTOR CORPORATION

● 2002 TOYOTA MOTOR CORPORATION
All rights reserved. This book may not be reproduced or copied, in whole or in part, without the written permission of Toyota Motor Corporation.

GENERAL INFORMATION

This manual provides instruction in the following repairs:

- How to Inspect for System Inspection
- Circuit Protection
- Terminal and Connector Repair Procedure

NOTICE:
When inspecting or repairing the SRS AIRBAG, be sure to carefully read the precautionary instructions and procedure in the Repair Manual for the applicable model.

A

After any electrical repair is made, always test the circuit by operating the devices in the circuit. This confirms not only that the repair is correct, but also that the cause of the complaint was correctly identified.

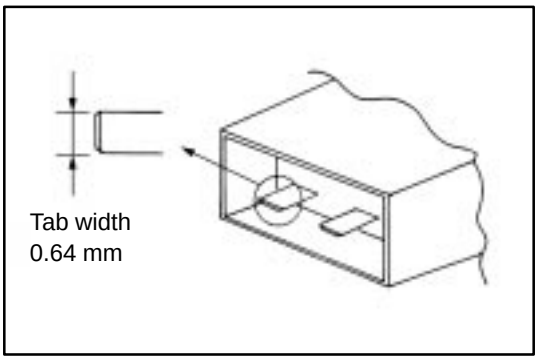

Terminal type number name

The terminal type number naming system has changed: the metric system will be used in place of the inch system. To be more specific, male tab width ”in millimeters” will be used as terminal type number from now on — in place of male tab width in inches which has been in use so far.

Below is a table of comparison:

Old terminal type No. (inch)		New terminal type No. (mm)
025	→	0.64
040 (II, III, IV)	→	1.0 (II, III, IV)
050	→	1.3
070 (II)	→	1.8 (II)
090 (II)	→	2.3 (II)
187	→	4.8
250 (II)	→	6.3 (II)
305	→	7.7
312	→	8.0
375	→	9.5

For those connectors which are not shown above, the terminal type numbers remain unchanged.

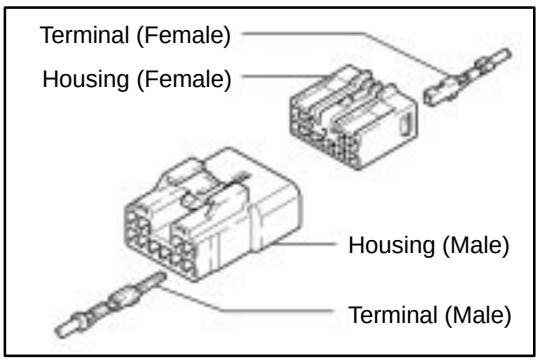

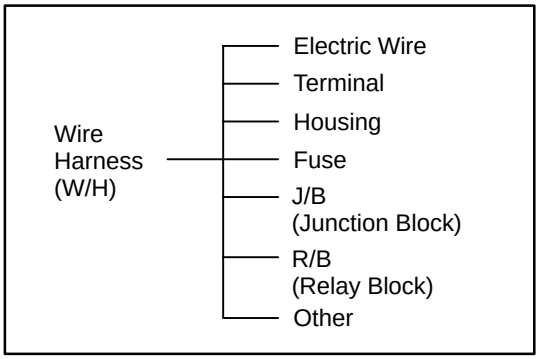

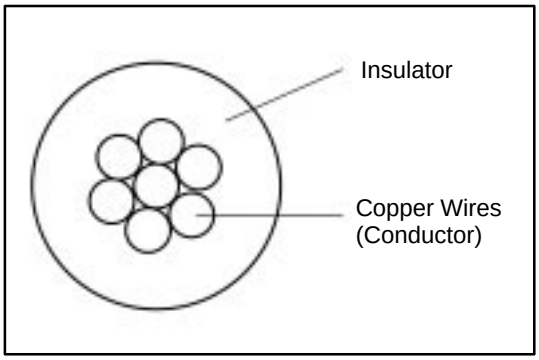

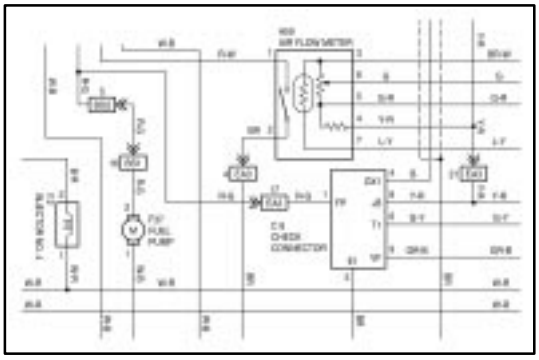

B	=	Black	W	=	White
L	=	Blue	BR	=	Brown
V	=	Violet	SB	=	Sky Blue
R	=	Red	G	=	Green
P	=	Pink	LG	=	Light Green
Y	=	Yellow	GR	=	Gray
O	=	Orange			

What is Wire Harness?

The wire harness (W/H) is systems of electric wires for automobiles to connect all the electronics parts in automobile electrically and work them. As more electronics parts are introduced in automobiles recently, the electric wires used for the wire harness are increasing in number and the structure is becoming more complicated. As a result of that, there are hundreds of connectors, which is the parts which connects wires mechanically and electrically, in one vehicle. Therefore, numbers of the connector terminal (Terminal) or the connector housing (Housing) are designed to meet many kinds of uses of circuits. Various components have been improved to ensure the product reliability or realize a wider space in the vehicles.

Wire Harness Components

Wire harness mainly consists of wires, terminals, or housings.
There are various components are designed for many parts of vehicles, such as one with high heat–resistance, water–resistance, or bending ability, ones have different current capacities, or ones are hardly influenced by electromagnetic noise.

Electric Wire

The electric wires used for the wire harness consists of the conductor made from numbers of twisted mild copper wire with a diameter of less than 0.5 mm and the insulator surrounding the conductor.
The insulator is generally made from vinyl chloride and covers the conductor with even thickness. The insulators are color–coded in order to distinguish each wire. The base colors or the stripe patterns is used to make difference between insulators. Each color of wires is indicated by the abbreviation in the repair manual and the electrical wiring diagram.

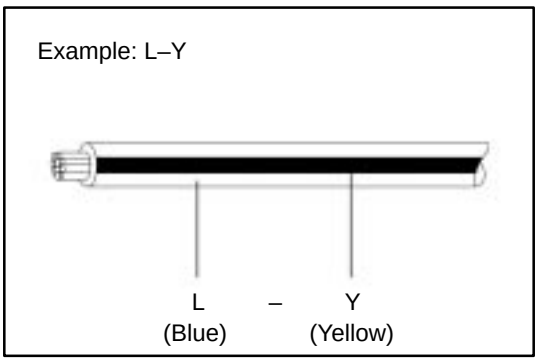

The first letter indicates the basic wire color and the second letter indicates the color of the stripe.

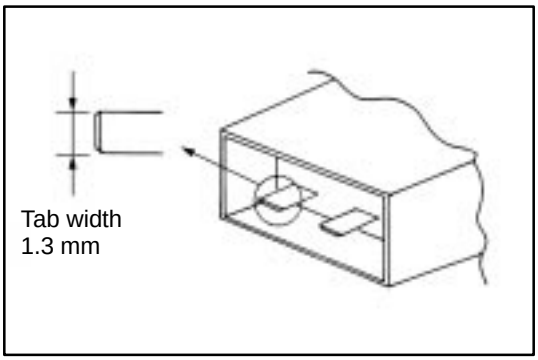

Terminal and housing

Terminal connects wires and housing insulates connecting parts.

There are the male terminal and the female terminal. The types of terminals are decided by tab width of male terminal. And the terminal with the rubber plug or the rubber ring is used in the part, such as the engine compartment, which become wet. For the circuit with slight current at EFI system or ABS system, the gold–plated terminal is introduced for ensuring reliabilities.

As the number of the circuit is increasing recently, there are new types of parts introduced. For example, there is the hybrid type housing, which is a combination of terminals with different tab width, such as the power source terminal or the signal terminal. Also, new type of connector such as the double lock housing, which is designed with the retainer in addition to the lance to prevent terminal from slipping off, is available. The new type of connectors are produced to realize higher product reliabilities and utilized widely recently. The major characteristics of these new connectors are shown in the table 1.

There are two types of lances: housing lance, which is inside the housing and terminal lance, which is inside the terminal.

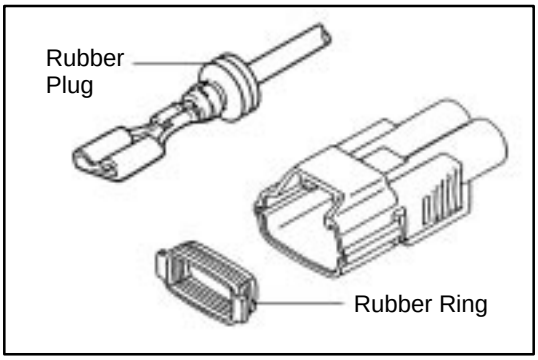

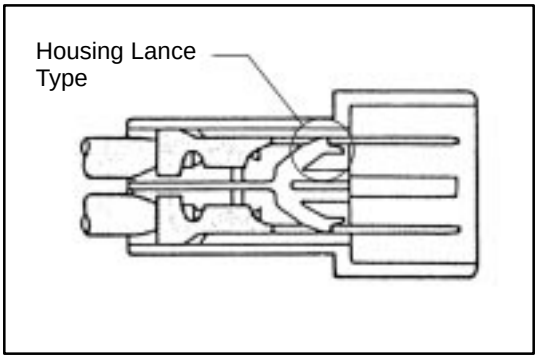

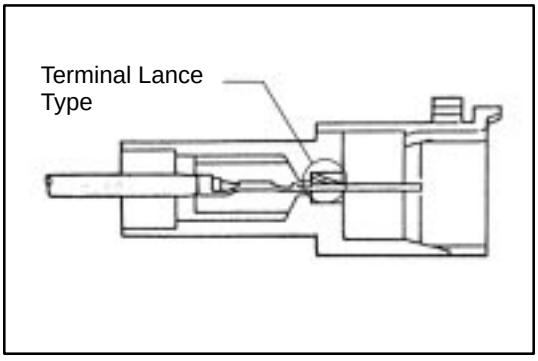

Table 1 : Characteristics of the new types of connector (Improvement)

Characteristics (Improvement)	Note
1. Double Lock 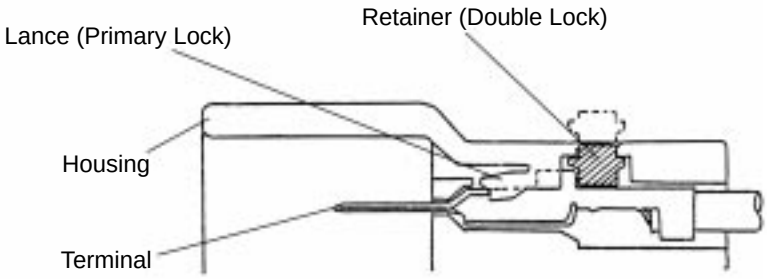 	If terminal is not inserted to housing correctly, the retailer does not fit.
2. Extension of Housing 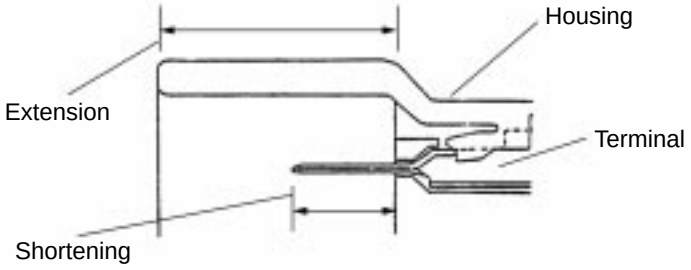 	This is to prevent deformation of the terminal when it is inserted diagonally.
3. Change of Contact Structure and Introduction of Box–Shaped Structure 	Expansion of contact section Stabilization of contact pressure
4. Change of Locking Shape 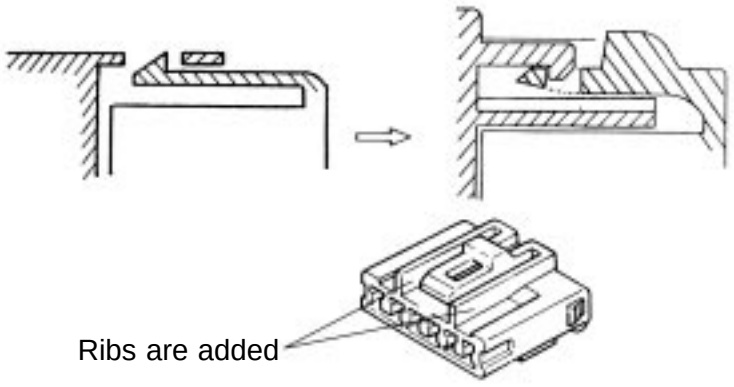 	This improves the close fit of locking and you can hear the click sound and feel that the connector is completely installed.

HOW TO PERFORM FOR SYSTEM INSPECTION

This inspection procedure is a simple troubleshooting which should be carried out on the vehicle during system operation and is based on the assumption of system component trouble

Always inspect the trouble taking the following items into consideration:

- Ground point fault
- Open or short circuit of the wire harness
- Connector or terminal connection fault
- Fuse or fusible link fault

NOTICE:

- **This is an on–vehicle inspection during system operation. Therefore, inspect the trouble with due regard for safety.**
- **If connecting the battery directly, be careful not to cause a short circuit, and select the applicable voltage.**

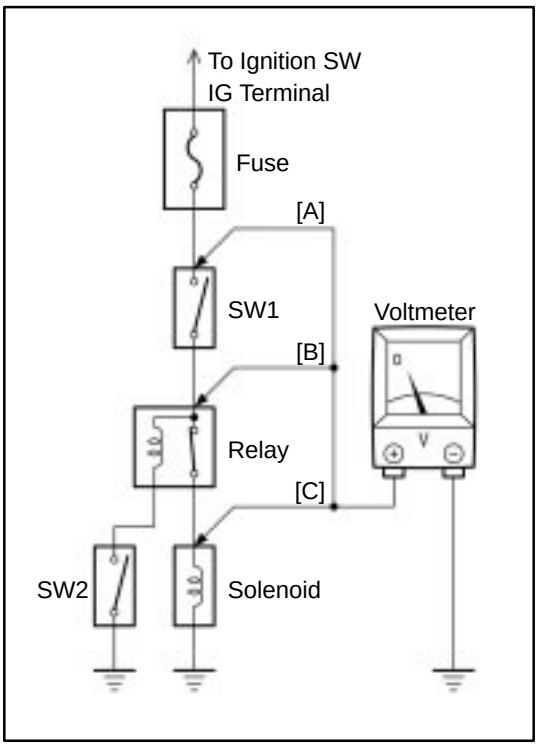

1. Voltage Check

(a) Establish conditions in which voltage is present at the check point.

Example:
[A] – Ignition SW on
[B] – Ignition SW and SW 1 on
[C] – Ignition SW, SW 1 and Relay on (SW 2 off)

(b) Using a voltmeter, connect the negative (–) lead to a good ground point or negative (–) battery terminal and the positive (+) lead to the connector or component terminal. This check can be done with a test bulb instead of a voltmeter.

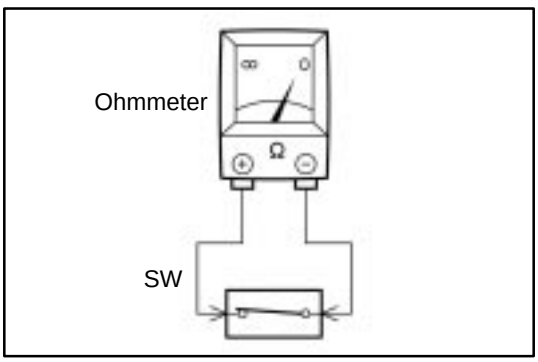

2. Continuity and Resistance Check

(a) Disconnect the battery terminal or wire so there is no voltage between the check points.

(b) Contact the two leads of an ohmmeter to each of the check points.

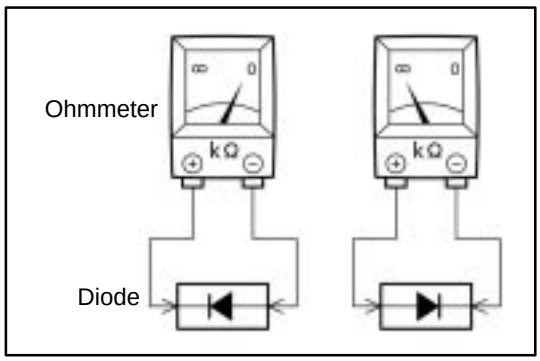

If the circuit has diodes, reverse the two leads and check again.
When touching the negative (–) lead to the diode positive (+) side and the positive (+) lead to the negative (–) side, there should be continuity. When touching the two leads in reverse, there should be no continuity.

HINT: Specifications may vary depending on the type of tester, so refer to the tester's instruction manual before performing the inspection.

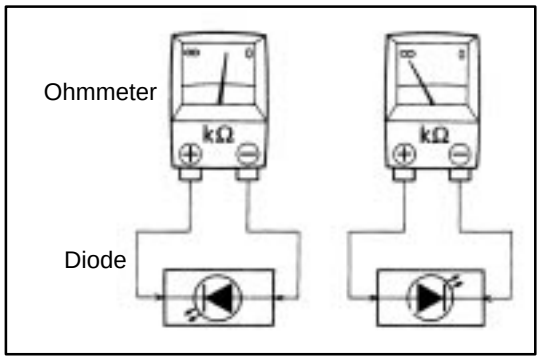

Check LED (Light Emitting Diode) in the same manner as that for diodes.

HINT:

- Use a tester with a power source of 3V or greater to overcome the circuit resistance.
- If a suitable tester is not available, apply battery voltage and check that the LED lights up.

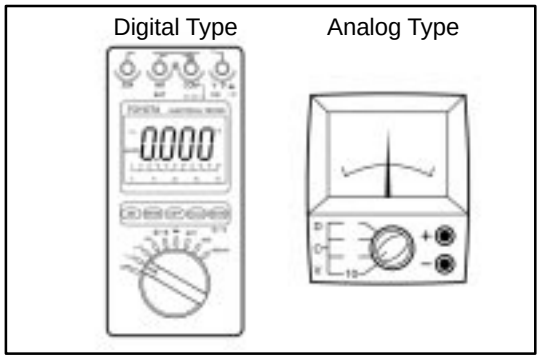

(c) Use a volt/ohmmeter with high impedance (10kΩ/V minimum) for troubleshooting of the electrical circuit.

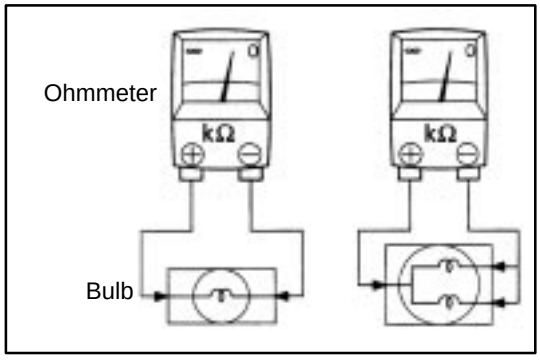

3. Bulb Check

(a) Remove the bulb.

(b) There should be continuity between the respective terminals of the bulb together with a certain amount of resistance.

(c) Apply the two leads of the ohmmeter to each of the terminals.

(d) Apply battery voltage and check that the bulb light up.

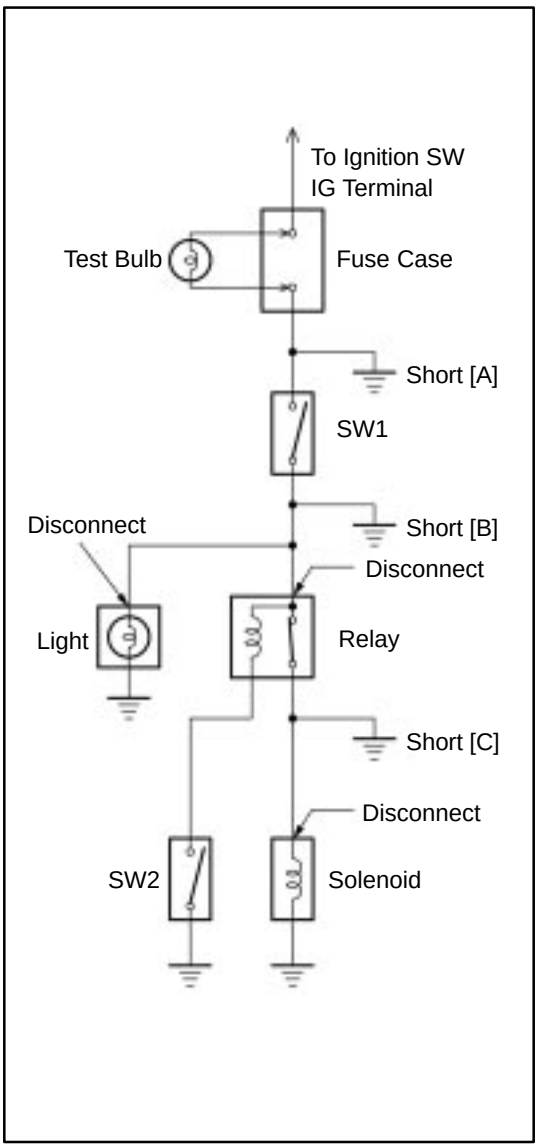

4. Finding a Short Circuit

(a) Remove the blown fuse and eliminate all loads from the fuse.

(b) Connect a test bulb in place of the fuse.

(c) Establish conditions in which the test bulb comes on.

Example:
[A] – Ignition SW on
[B] – Ignition SW and SW 1 on
[C] – Ignition SW, SW 1 and Relay on (Connect the Relay) and SW 2 off (or disconnect SW 2)

(d) Disconnect and reconnect the connectors while watching the test bulb. The short lies between the connector where the test bulb stays lit and the connector where the bulb goes out.

(e) Find the exact location of the short by lightly shaking the problem wire along the body.

CAUTION:

(a) **Do not open the cover or the case of the ECU unless absolutely necessary. (If the IC terminals are touched, the IC may be destroyed by static electricity.)**

(b) **When replacing the internal mechanism (ECU part) of the digital meter, be careful that no part of your body or clothing comes in contact with the terminals of leads from the IC, etc. of the replacement part (spare part).**

CIRCUIT PROTECTION

All electrical circuits are protected against excessive loads which might occur because of shorts or overloads in the wiring system. Such protection is provided by a fuse, circuit breaker, or fusible link, A short circuit may cause a fuse to blow or a circuit breaker to open.

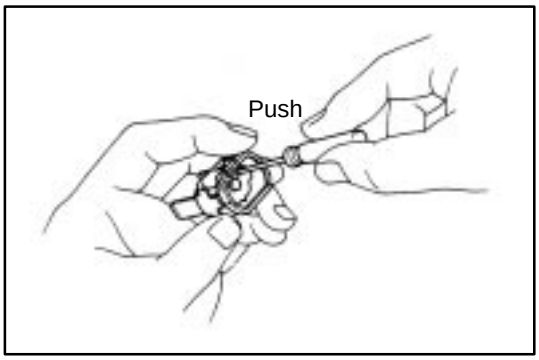

RESET CIRCUIT BREAKER

1. Remove Circuit Breaker

(a) Disconnect the negative (–) cable from the battery.

(b) Remove the circuit breaker.

2. Reset Circuit Breaker

(a) Insert the needle into the reset hole and push it.

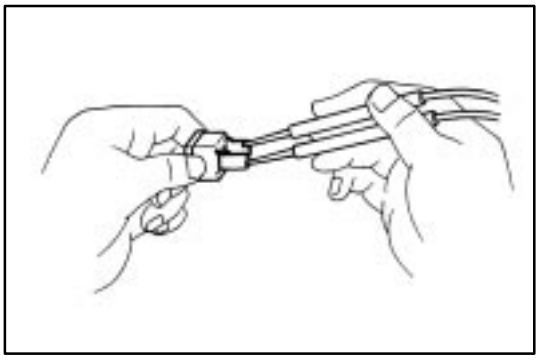

(b) Using an ohmmeter, check that there is continuity between both terminals of the circuit breaker.

If continuity is not as specified, replace the circuit breaker.



Equal Amperage Rating

HINT: If replacing the circuit breaker, be sure to replace it with a breaker with an equal amperage rating.

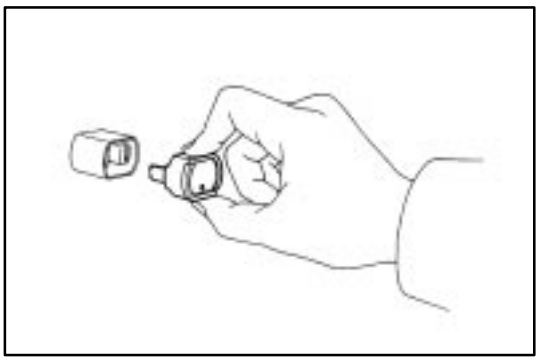

3. Install Circuit Breaker

(a) Install the circuit breaker.

(b) Connect the negative (–) cable to the battery.

HINT: If a circuit breaker continues to cut out, a short circuit is indicated. Have the system checked by a qualified technician.

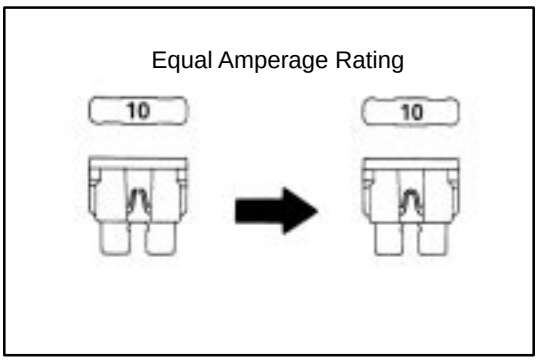

REPLACEMENT OF FUSE AND FUSIBLE LINK

HINT: If replacing the fuse or fusible link, be sure to replace it with a fuse or fusible link with an equal amperage rating.

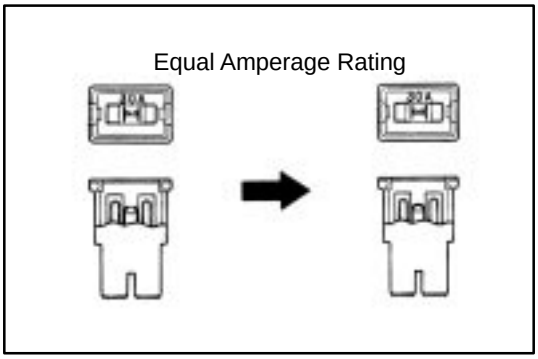

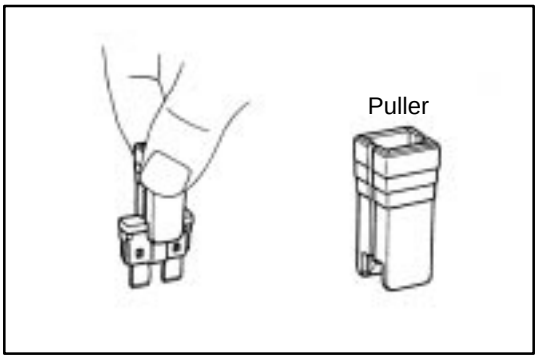

NOTICE:

1. **Turn off all electrical components and the ignition switch before replacing a fuse or fusible link. Do not exceed the fuse or fusible link amperage rating.**
2. **Always use a fuse puller for removing and inserting a fuse. Remove and insert straight in and out without twisting. Twisting could force open the terminals too much, resulting in a bad connection.**

If a fuse or fusible link continues to blow, a short circuit is indicated. The system must be checked by a qualified technician.

HINT: The puller is located at Junction Block No.2.

PREPARATORY ITEMS

Tool	Crimping tool	AMP Part No. 169060	For caulking press sleeves
	Special tool	Refer to the following illustration	To remove the terminal
	SST	09991–00500	To remove the 0.64 connector terminal
Gauge	Caliper	0–150 mm	To measure the diameter of the core
Others	Press sleeve	82999–12010 (Red) 82999–12020 (Blue) 82999–12030 (Yellow)	To connect wires
	Silicon tape	08231–00045	To waterproof the connected section

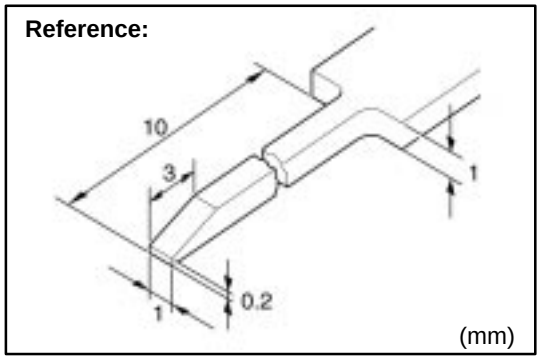

Special Tool

HINT: To remove the terminal from the connector, please construct and use the special tool or like object shown on the left.

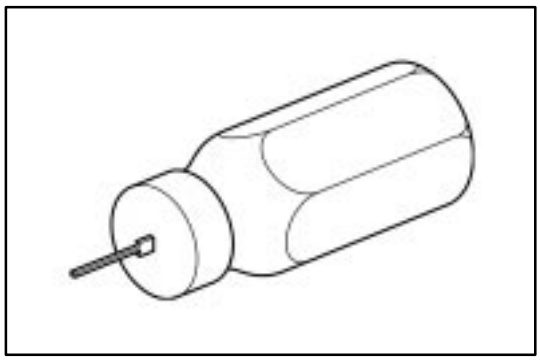

Preparation of the SST to release the 0.64 connector terminal.
SST 09991–00500

HINT:
This is a SST for releasing terminals from 0.64 connectors.

CONNECTOR REPAIR

The repair parts now in supply are limited to those connectors having common shapes and terminal cavity numbers. Therefore, when there is no available replacement connector of the same shape or terminal cavity number, please use one of the alternative methods described below. Make sure that the terminals are placed in the original order in the connector cavities, if possible, to aid in future diagnosis.

1. When a connector with a different number of terminals than the original part is used, select a connector having more terminal cavities than required, and replace both the male and female connector parts.

   EXAMPLE: You need a connector with six terminals, but the only replacement available is a connector with eight terminal cavities. Replace both the male and female connector parts with the eight terminal part, transferring the terminals from the old connectors to the new connectors.

2. When several different type terminals are used in one connector, select an appropriate male and female connector part for each terminal type used, and replace both male and female connector parts.

   EXAMPLE: You need to replace a connector that has two different types of terminals in one connector. Replace the original connector with two new connectors, one connector for one type of terminal, another connector for the other type of terminal.

3. When a different shape of connector is used, first select from available parts a connector with the appropriate number of terminal cavities, and one that uses terminals of the same size as, or larger than, the terminal size in the vehicle. The wire lead on the replacement terminal must also be the same size as, or larger than, the nominal size of the wire in the vehicle. (”Nominal” size may be found by looking at the illustrations in the section F or by direct measurement across the diameter of the insulation). Replace all existing terminals with the new terminals, then insert the terminals into the new connector.

   EXAMPLE: You need to replace a connector that is round and has six terminal cavities. The only round replacement connector has three terminal cavities. You would select a replacement connector that has six or more terminal cavities and is not round, then select terminals that will fit the new connector. Replace the existing terminals, then insert them into the new connector and join the connector together.

Step 1. Identify the connector and the terminal type.

Confirm whether the connector you require is the non–waterproof, waterproof or combined terminal type connector from the pictures provided in the following charts.

Connector	Description
Non–Waterproof Type	Those connectors which are not of the waterproof or combined terminal type.
Waterproof Type	Waterproof material (hole plug or terminal packing) is provided on the terminal/connector body.
Combined Terminal Type	Terminals of different shape/size are located in one connector.

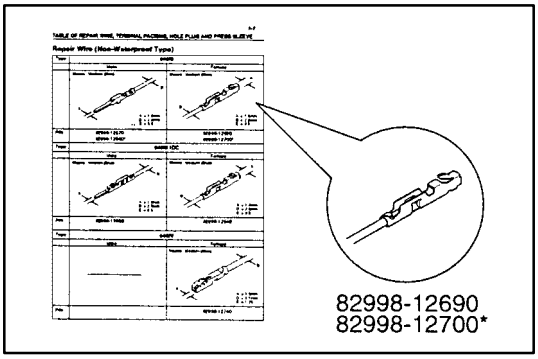

1. Terminal with Wire

Identify the part number of the terminal with wire by picking out the corresponding illustration from the pictures provided on the following charts.

HINT: In some of the illustrations, there are two part numbers for the same illustration of terminal with wire, because although the shapes of the terminals are completely the same, there is a difference in with /without gold–plating (gilded).

Remark: The length of the wire connected to the terminal is approximately 150 mm.

NOTICE:
- **When the terminal used is gold plated, be sure to replace it with a gold plated terminal when marking repairs.**
- **Do not use male and female terminals which are made of different materials from each other.**

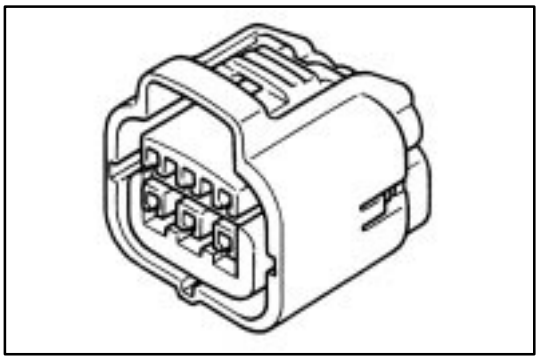

2. Connector Body

(a) Identify the part number of the corresponding terminal with wire according to the above–mentioned 1.

(b) Identify the part number of the connector body by picking out the correct one from the illustrations according to the number of terminals and the shape.

HINT:

(a) If you can find no connector which matches the type you require, pick out male and female connector bodies as a set which have more terminals than you require.

For the combined terminal type connector body, pick out and appropriate connector body for each terminal being used.

Example:
When two types of terminal are used in one connector body, pick out a male and female for two different connector bodies.

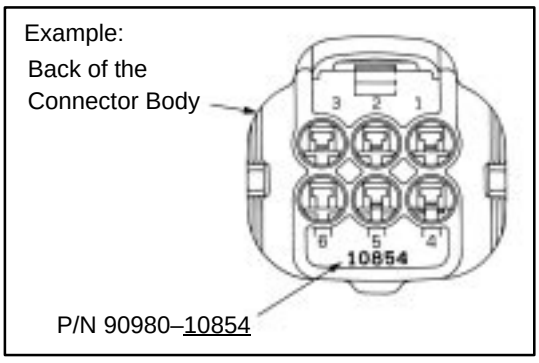

(b) The part number has been stamped on the back of the connector body. (This will continue to be done to new types of connector.)

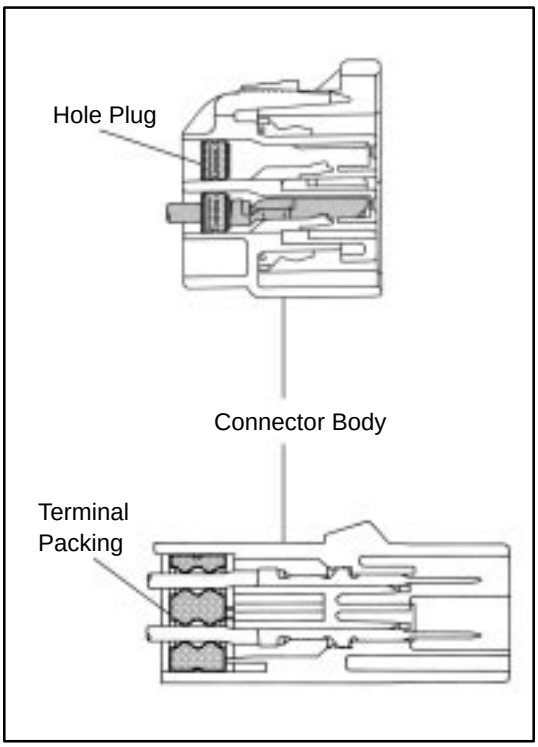

3. Hole Plug/Terminal Packing

(a) Identify the part number of the appropriate terminal with wire/connector body from the illustrations of waterproof type connector according to the above–mentioned 1 and 2.

(b) Identify the part number of the hole plug/terminal packing from the corresponding illustration.

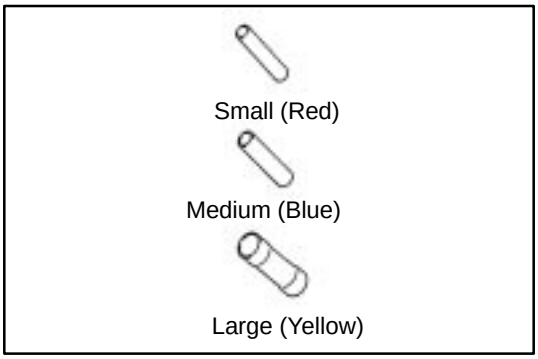

4. Sleeve

When connecting two wires using a sleeve, select the sleeve according to the following table.

Wire Outside Diameter	Sleeve Size (Color)
0.2–1.0 mm	Small (Red)
1.0–2.0 mm	Medium (Blue)
3.0–5.0 mm	Large (Yellow)

(a) When size is based on the outside diameter of the wire.

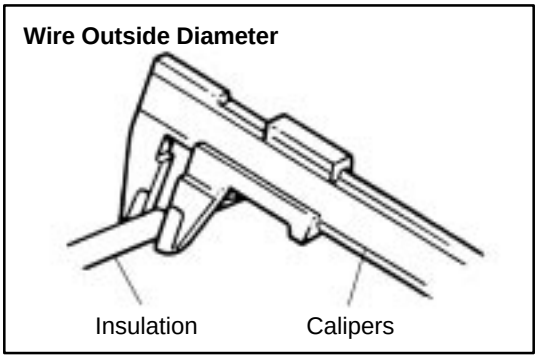

＊ \ ＊	0.3	0.5	0.85	1.25	2	3	5
0.3	S	M	M	M	M	L	L
0.5	M	M	M	M	M	L	L
0.85	M	M	M	M	L	L	L
1.25	M	M	M	M	L	L	L
2	M	M	L	L	L	L	—
3	L	L	L	L	L	L	—
5	L	L	L	L	—	—	—

＊ Nominal size of the wire

(b) When size is based on the nominal size of the wire.

Sleeve size

S : Small (Red)

M : Medium (Blue)

L : Large (Yellow)

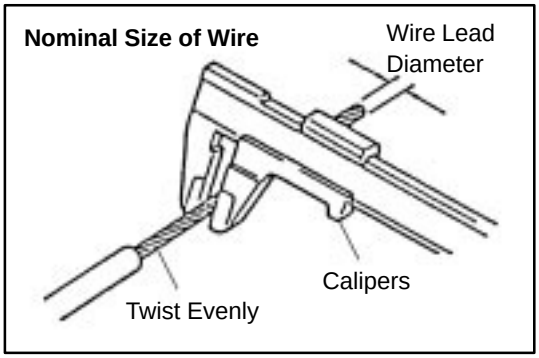

HINT: To calculate the ”Nominal Size” of the wire.

Nominal size =

$$\frac{3.14 \times (\text{Diameter of stripped wire harness})^2}{4}$$

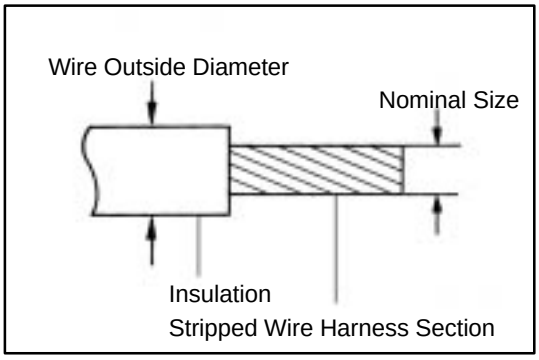

HINT: Outside Diameter and Nominal Size

Step 2. Disconnect the Terminal from the Connector.

1. Disconnect Connector

To pull apart the connectors, pull on the connector itself, not the wire harness.

HINT: Check to see what kind of connector you are disconnecting before pulling apart.
Press down type is mainly used.

Example:

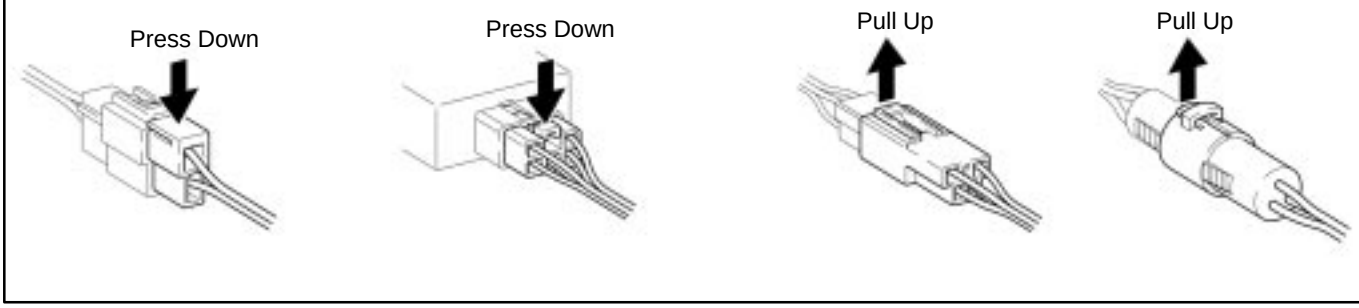

Refereance:

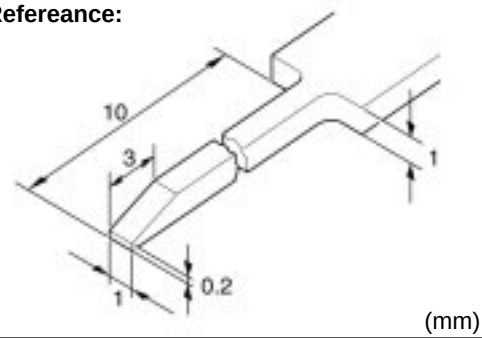

2. Prepare the Special Tool

HINT: To remove the terminal from the connector, please construct and use the special tool or like object shown on the left.

Example:

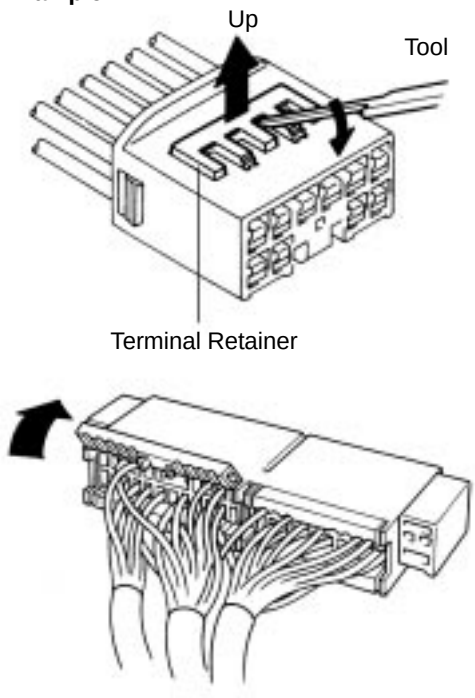

3. Disengage the double locking device or terminal retainer.

(a) Locking device must be disengaged before the terminal locking clip can be released and the terminal removed from the connector.

(b) Use a special tool or the terminal pick to unlock the double locking device.

NOTICE:
Do not remove the terminal retainer from connector body.

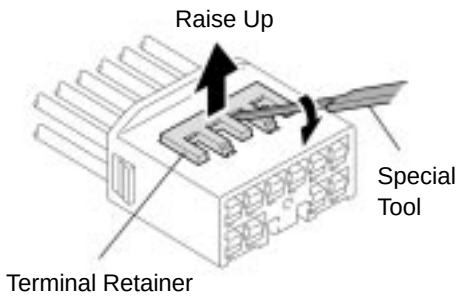

Type A (For 1.0II, 1.8, 2.3II, 4.8 and 8.0 of Non–Waterproof Type Connector)

(1) Using the special tool, raise the retainer up to the temporary lock position.

HINT: The needle insertion position varies according to the connector's shape (number of terminals, etc.), so check the position before inserting it.

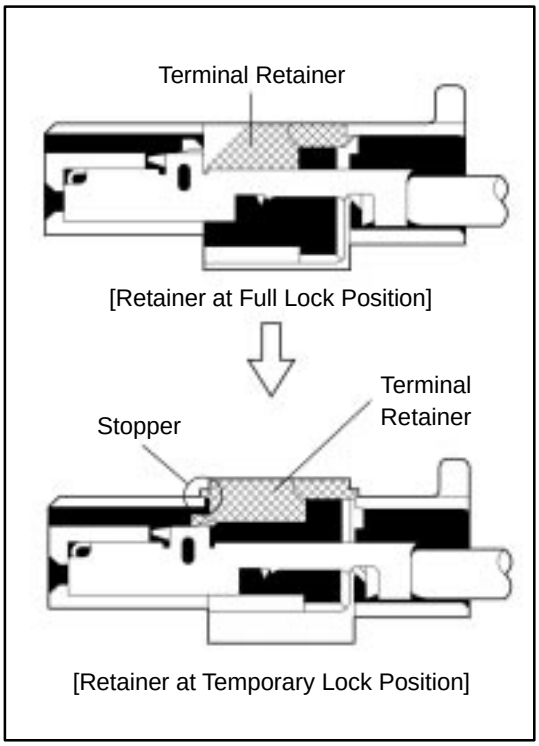

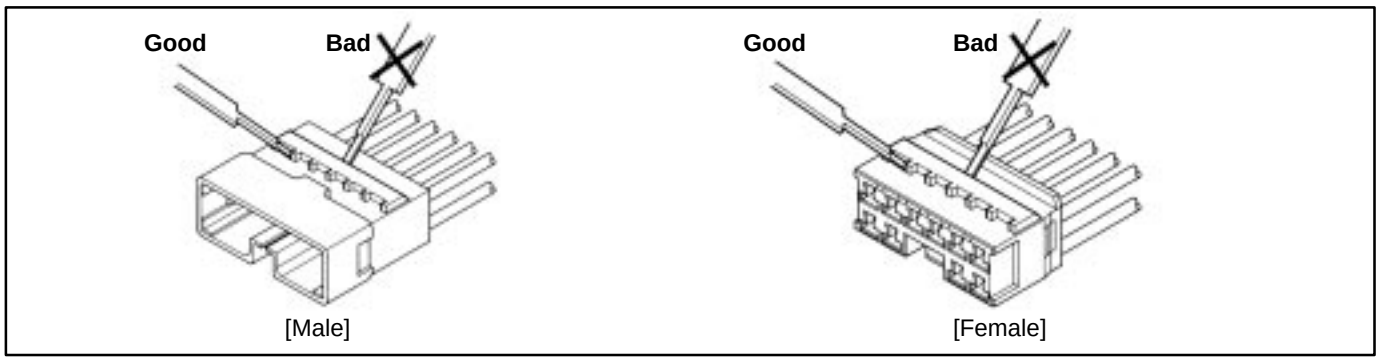

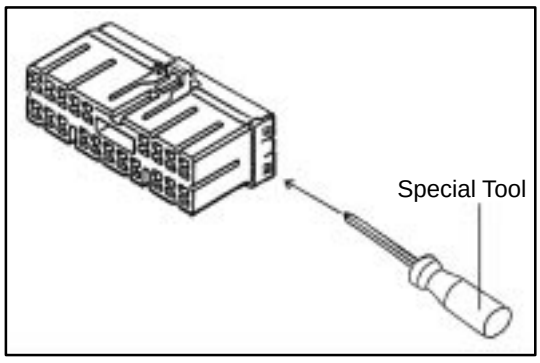

Type B (For 1.8, 1.0 and TLC of Non–Waterproof Type Connector)

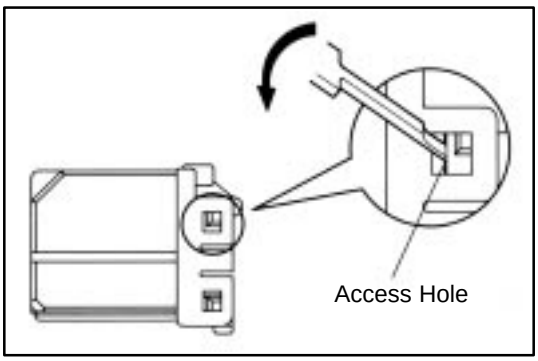

(1) Press the special tool at a 45° angle into the locking lug access hole as shown.

Raise the double locking device up as far as possible.

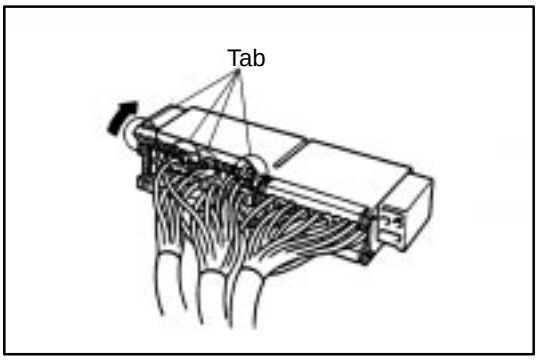

(2) Remove the special tool and open the double locking device

NOTICE:
TLC housing is not be reusable. Please replace it with the new one after replacement of the terminal.

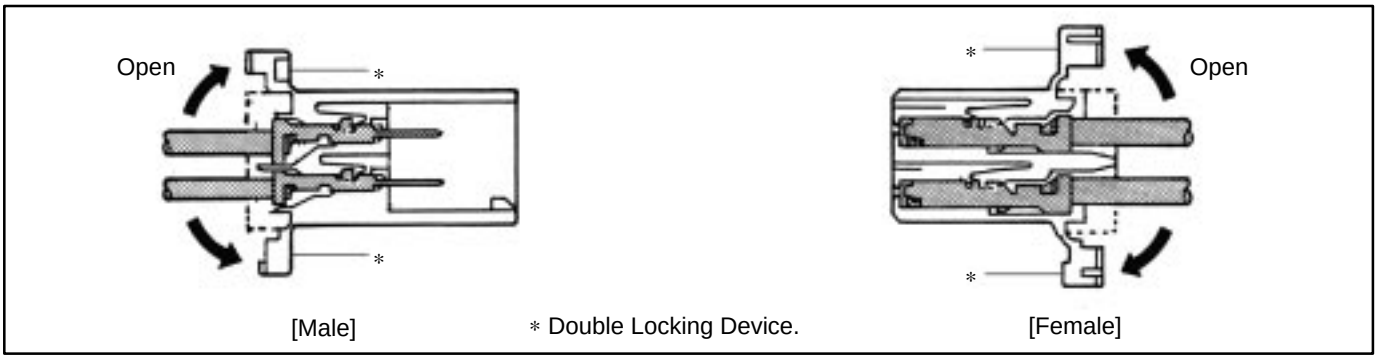

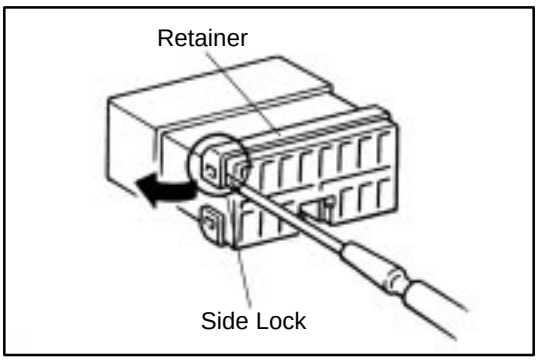

Type C (For TNS, FTC Type Connector)

(1) Widen the side lock part of the retainer from side to side using the special tool.

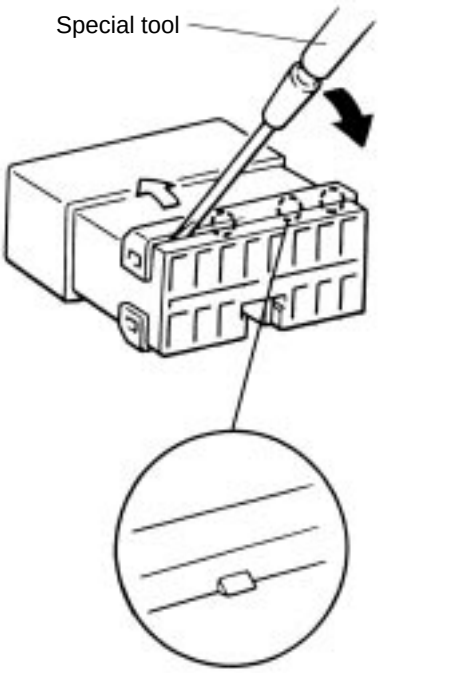

(2) Inset the special tool into the chink between the retainer and the terminal itself. Then pry it to the direction of the arrow shown in the illustration and push the retainer up to release the lock.

NOTICE:

- **Do not insert the special tool too much. It may cause damage on the fit section of the terminal and the wire harness.**
- **TNS housing is not reusable. Please replace it with the new one after replacement of the terminal.**

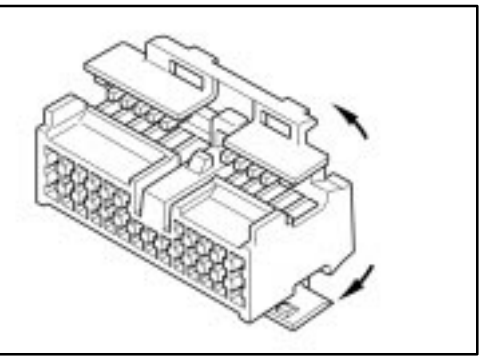

Type D (For 1.3 of Non–Waterproof Type Connector)

[Case 1]

(1) Use the special tool to unlock the double locking device.

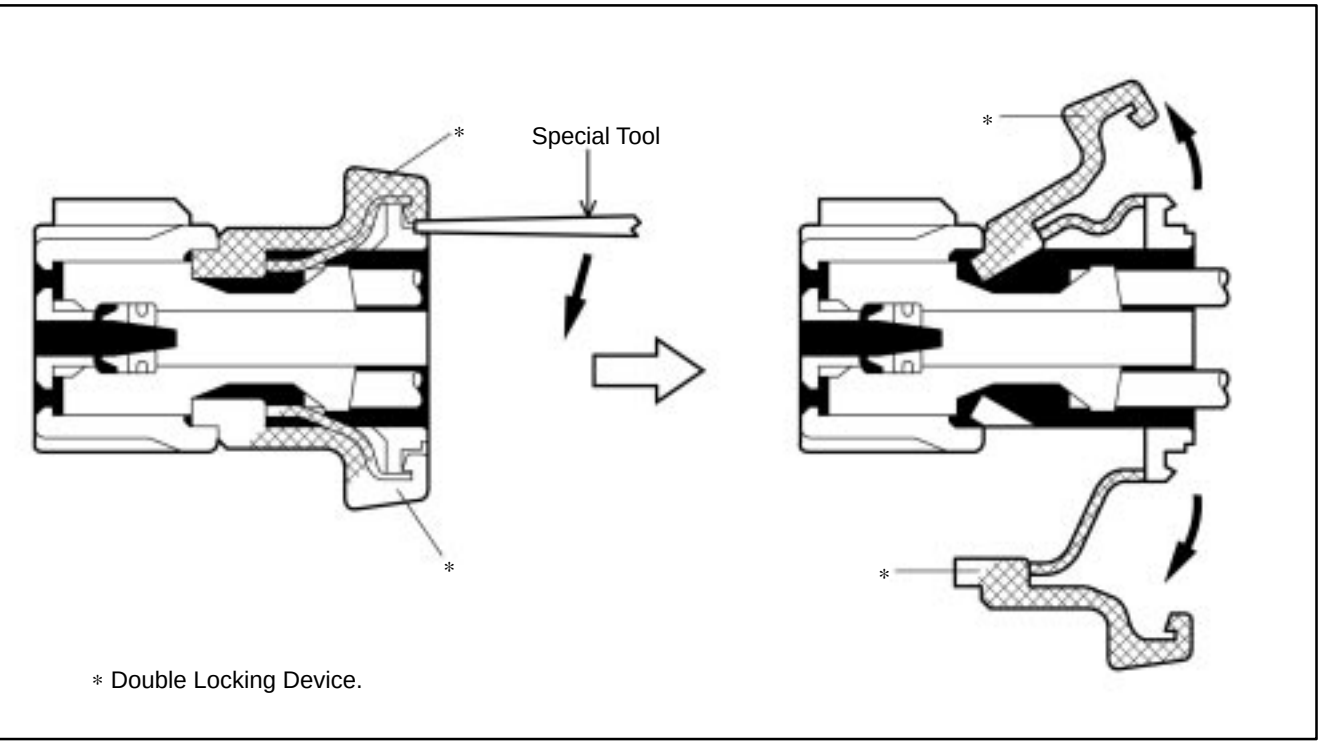

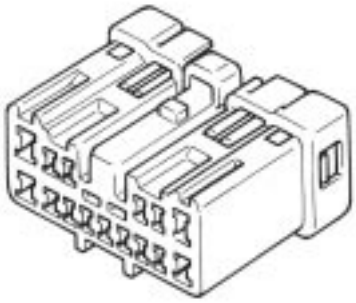

[Case 2]

(1) Using the special tool, push the terminal retainer locking lug (clip) and pull the terminal retainer up to the temporary lock position.

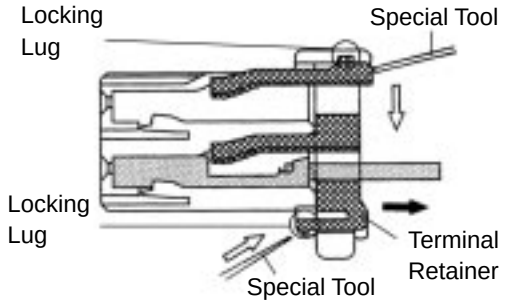

[Retainer at Full Lock Position]

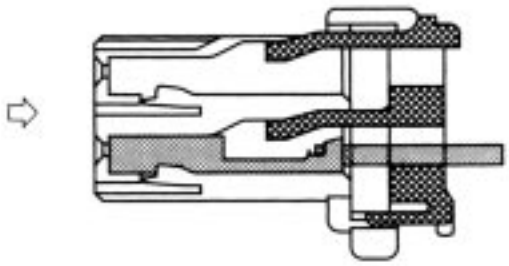

[Retainer at Temporary Lock Position]

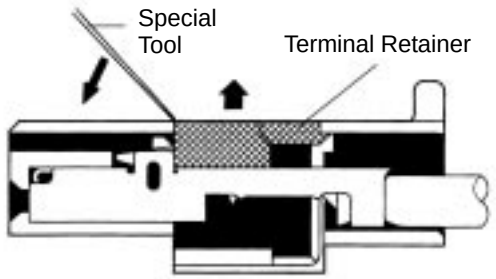

[Retainer at Full Lock Position]

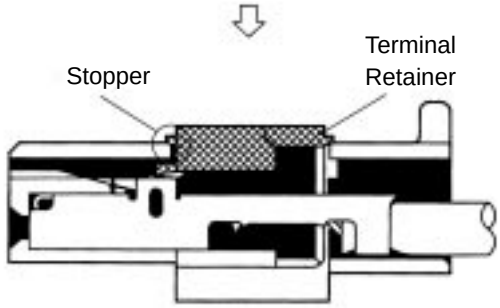

[Retainer at Temporary Lock Position]

[Case 3]

(1) Using the special tool, raise the retainer up to the temporary lock position.

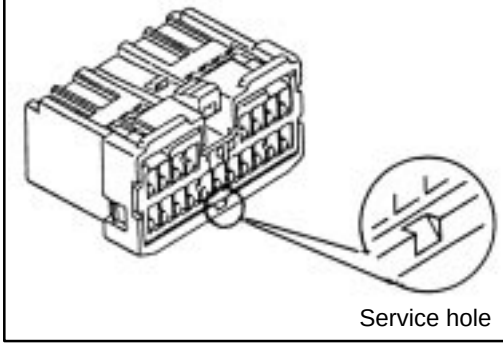

[Case 4]

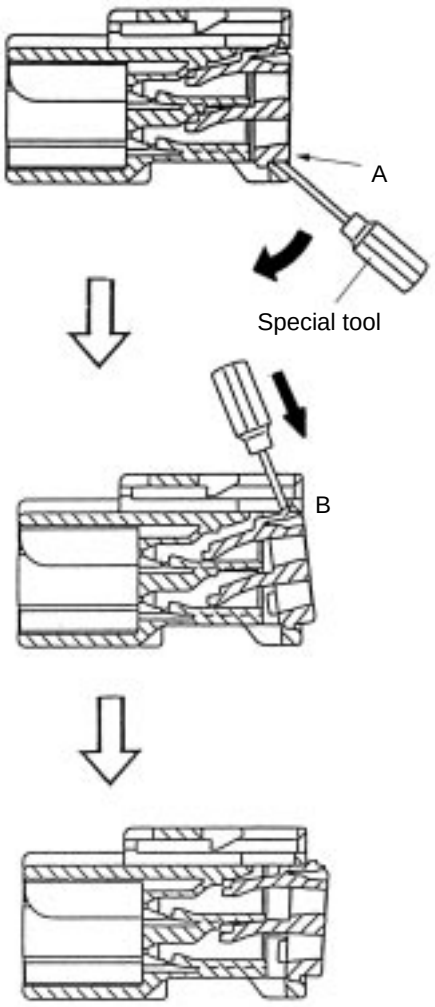

Appearance when the double locking is released

(1) Insert the special tool into the service hole and move it to the direction of the arrow to release the lock on the side A.

(2) Push the lock on the side B up by the special tool and release the lock. Then pull the retainer forward.

Type E (For 1.8, 2.3, 2.3II, 4.8, 6.3 and 8.0 of Waterproof Type Connector)

HINT: Terminal retainer color is different according to connector body.
Example:

Terminal Retainer	:	Connector body
Black or White	:	Gray
Black or White	:	Dark Gray
Gray or White	:	Black

[Case 1]

Type where terminal retainer is pulled up to the temporary lock position (Pull Type).

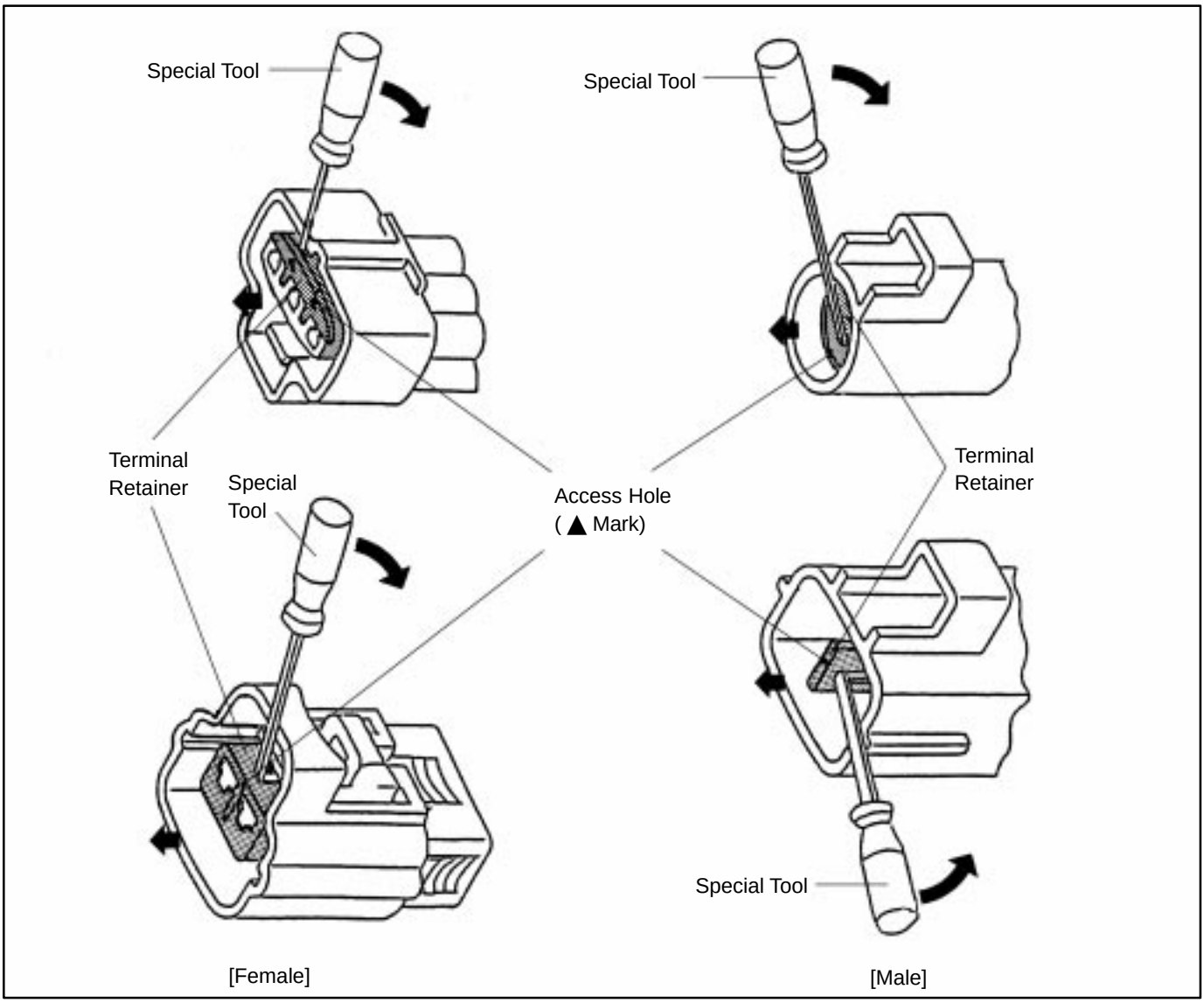

(1) Insert the special tool into the terminal retainer access hole (▲ Mark) and pull the terminal retainer up to the temporary lock position.

HINT: The needle insertion position varies according to the connector's shape (Number of terminals etc.), so check the position before inserting it.

Example:

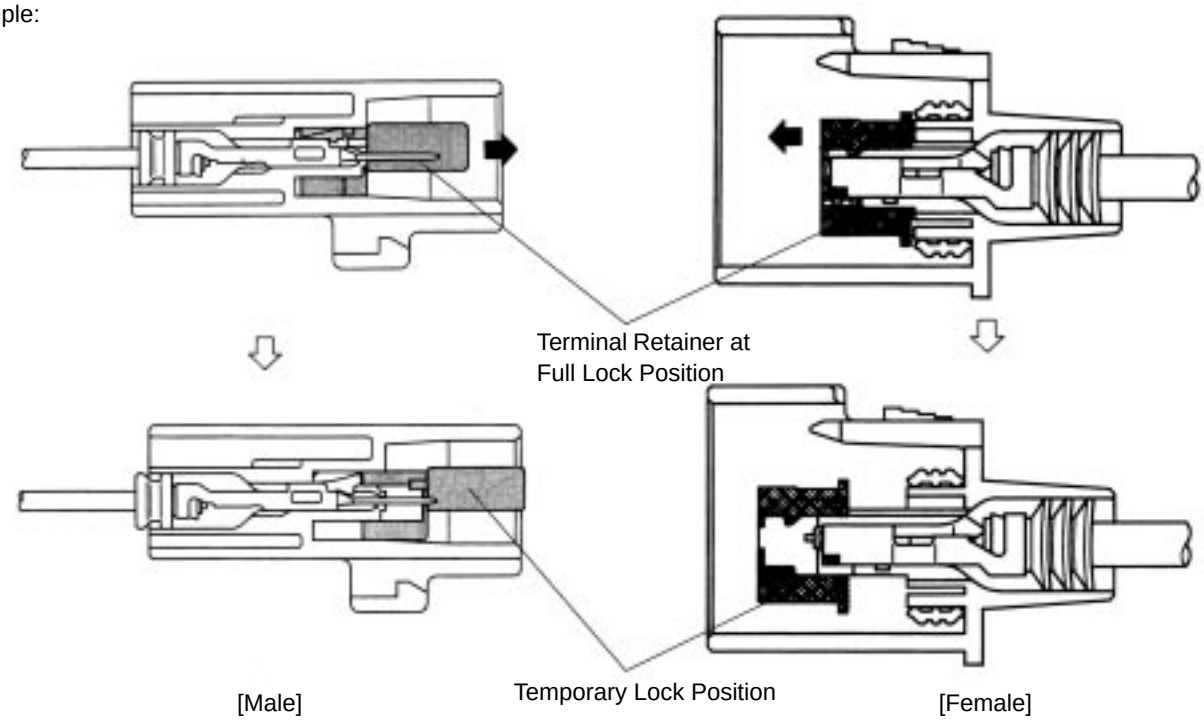

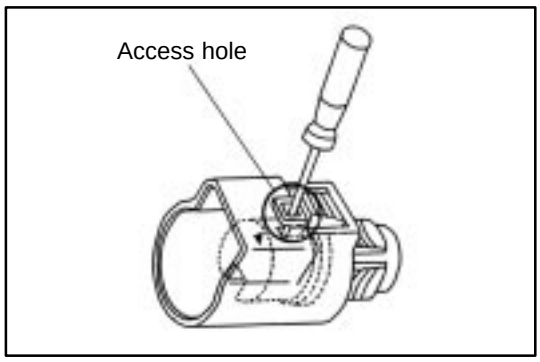

HINT: In some cases insert the special tool from the access hole on the flank of the housing.

[Case 2]

Type which cannot be pulled as far as Power Lock

HINT: There are few cases of this type of connector

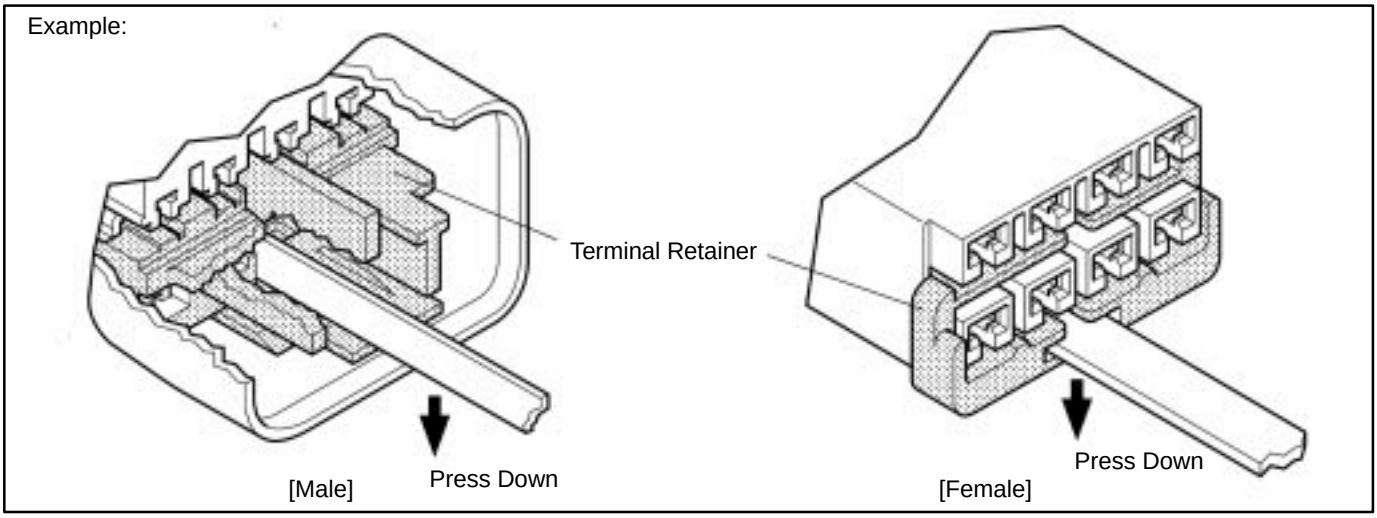

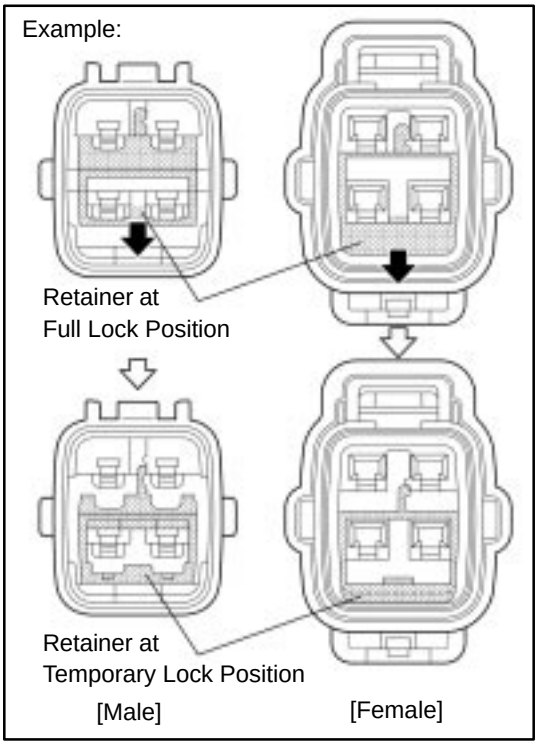

(1) Insert the tool straight into the access hole of terminal retainer as shown.

Push the terminal retainer down to the temporary lock position.

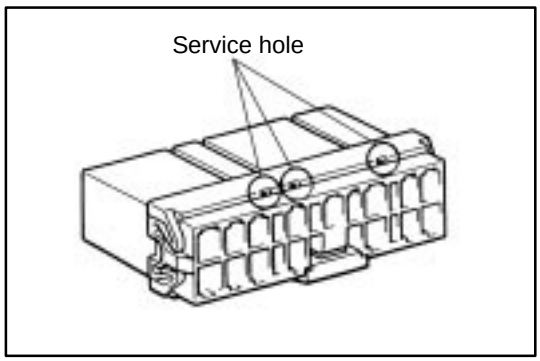

Type F (For C–Type Connector)

(1) Insert the special tool into the service hole.

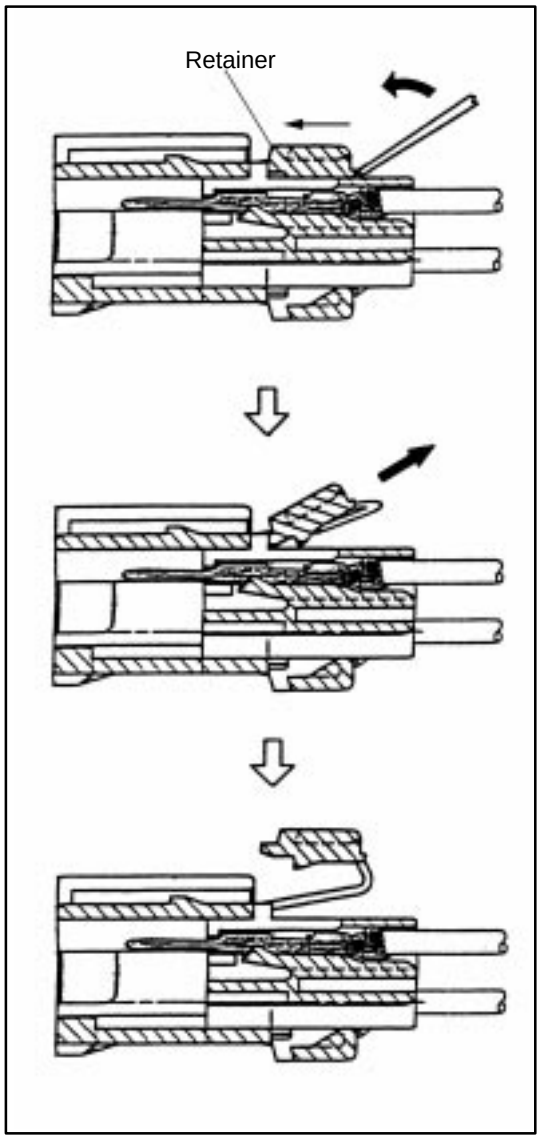

(2) Move the special tool to the direction of the arrow and release the lock.

HINT: Lift the retainer up after moving it to the direction of the thin arrow shown in the illustration.

(3) Pull the retainer forward by hand and remove the retainer from the housing.

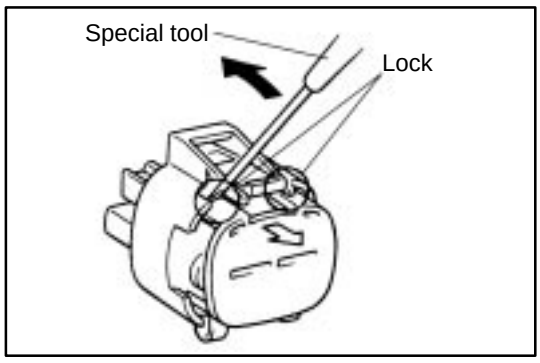

Type G

- Insert the special tool into the position shown in the illustration. Pry it to the direction of the arrow and push the lock up to release it.

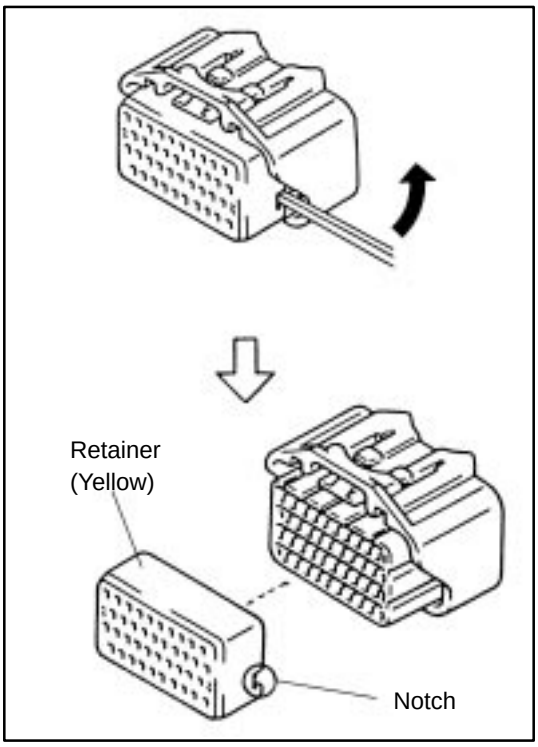

Type H (For 1.0II Type Connector)

(1) Move the special tool into the notch of the retainer to the direction of the arrow with the edge of the housing as the fulcrum. Then the pull the retainer out.

NOTICE:
Do not insert the special tool into areas except notches. (This may damage the seal ring that is attached behind the retainer.)

(2) As same as the procedure (1), pull the retainer straight out using hand after releasing the lock on the other side.

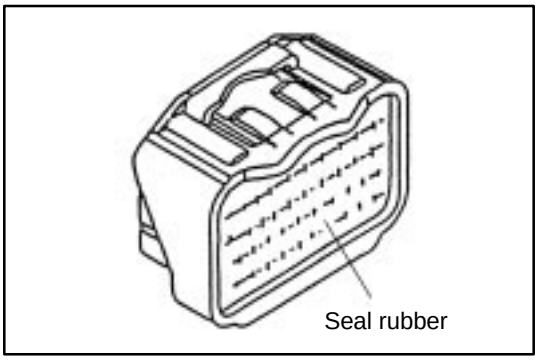

NOTICE:
- **Do not remove the seal rubber when pulling the terminal out.**
- **If the seal rubber is peeled off when puling the terminal out, press it down to stick it to the original condition.**
- **Be sure and not fit the connector when the retainer is not installed**.

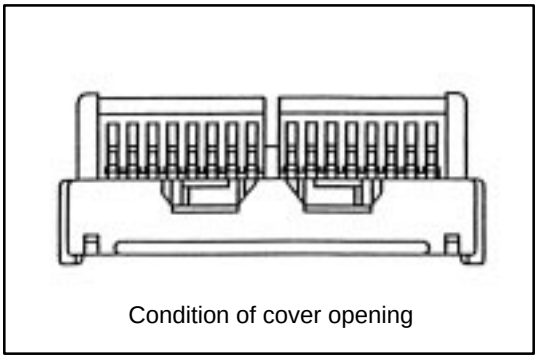

Type I (For SFPC Type Connector)

(1) Open the cover (white)

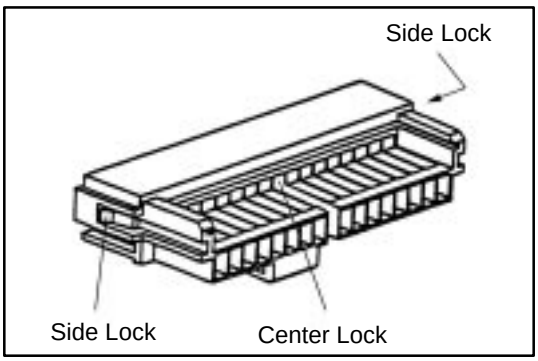

(2) Remove the side lock of the retainer. (One side)

(3) Remove the center lock of the housing.

(4) Remove the side lock of the retainer. (The other side)

NOTICE:
- **Following the above order is not required.**
- **No center lock on the housing with ten poles.**

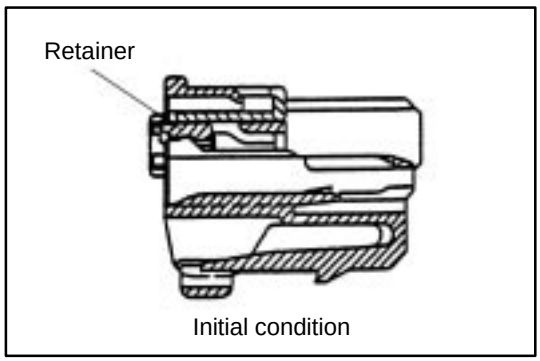

(5) Move the retainer until it becomes the initial condition.

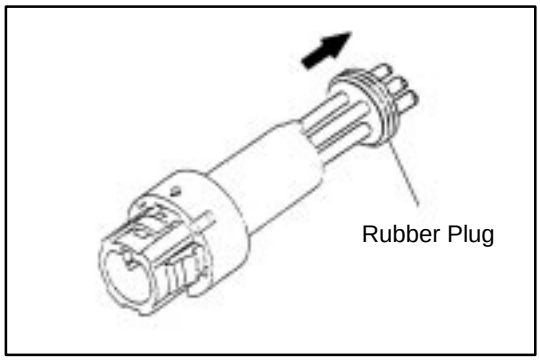

Type J

[Male]

(1) Remove the rubber plug.

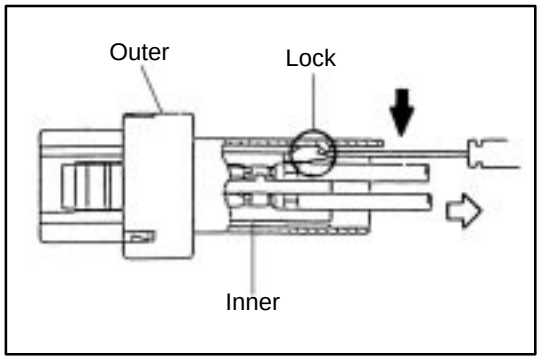

(2) Push the lock of the inner using the special tool.

(3) Pull the wire to the direction of the arrow pushing the lock up and remove the inner from the outer.

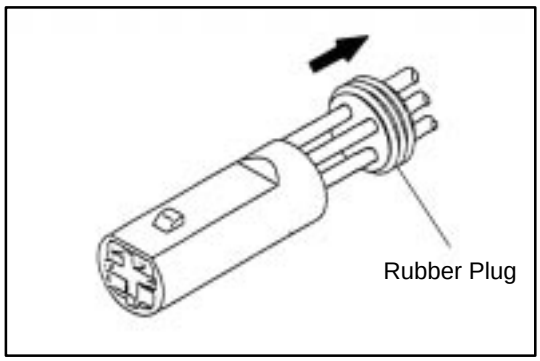

[Female]

(1) Remove the rubber plug.

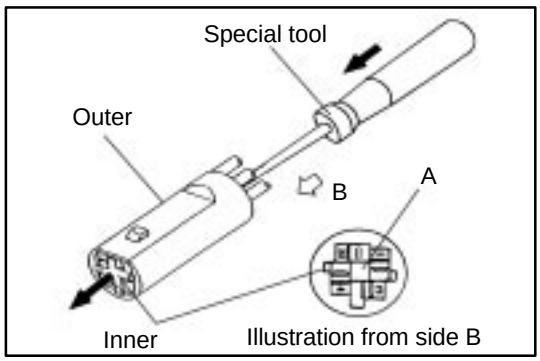

(2) Insert the special tool into the outer shown in the illustration. Then push the area A of the inner and remove the inner from the outer.

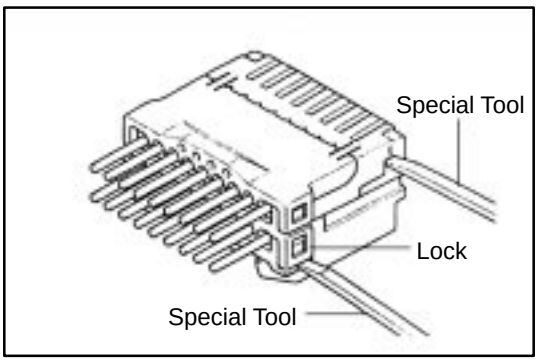

Type J (For Insulation Displacement Connector)

(1) Separate Connector

Using a special tool, release the lock and separate the connector into 2.

NOTICE:
Do not apply too muck force to the lock arm.

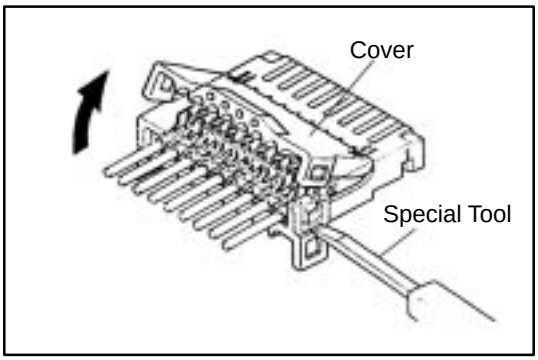

(2) w/ Cover : Open Connector Cover

Using a special tool, release the lock and open the cover.

NOTICE:
Do not apply too much force to the lock arm.

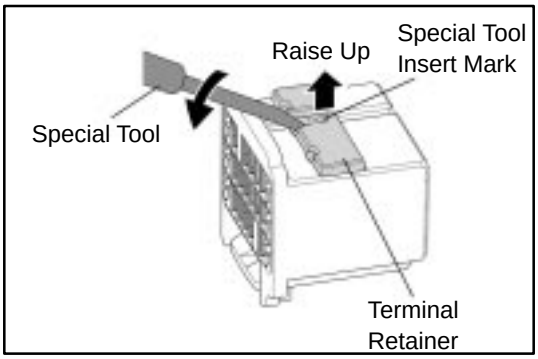

Type K (0.64 Type Connector)

(1) Using the special tool, raise the retainer up to the temporary lock position.

HINT: The needle insertion position varies according to the connector's shape (number of terminals, etc.), so check the position before inserting it.

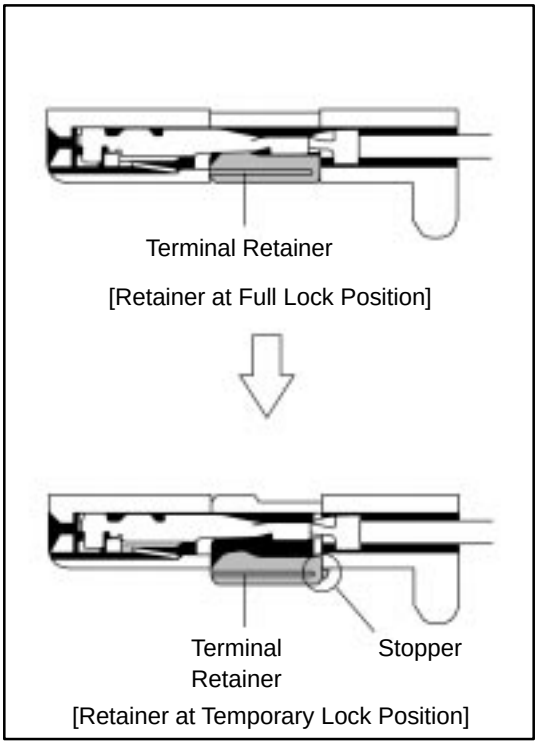

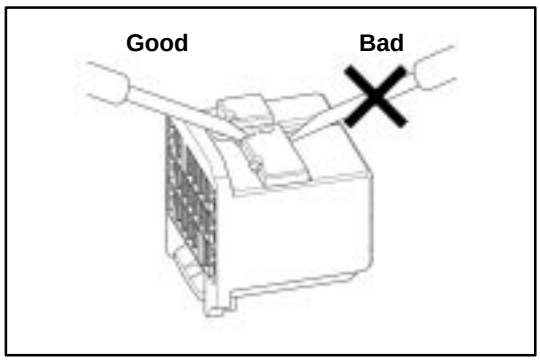

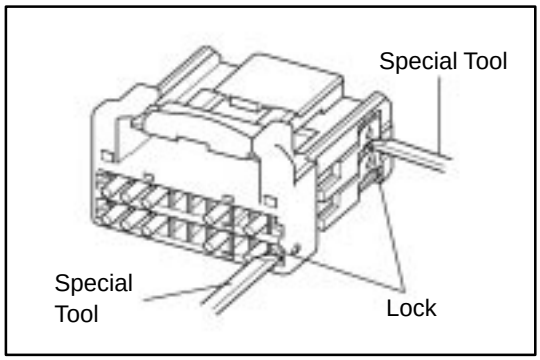

Type L (0.64 of Insulation Displacement Connector (IDC) Type)

(1) Remove the Lower Housing

Using a special tool, release the lock and remove the lower housing.

NOTICE:
- **Do not apply too much force to the lock arm.**
- **Mark the upper housing and lower housing to prevent mistakes when putting them together.**

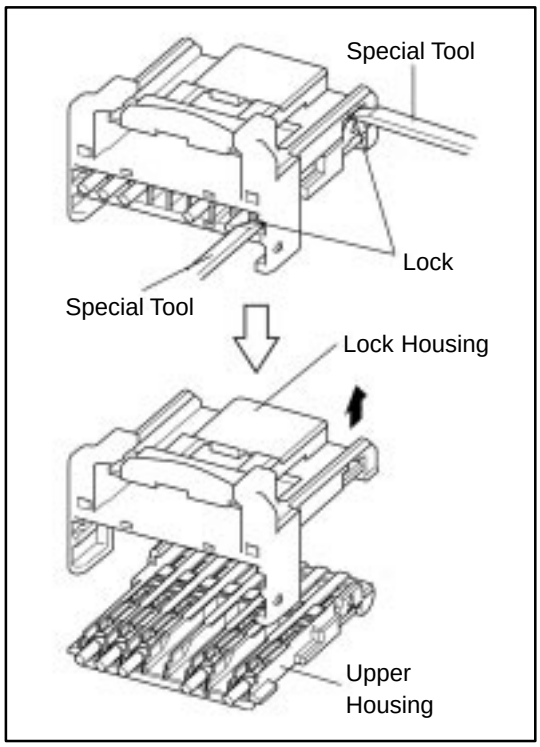

(2) Remove the Upper Housing

Using a special tool, release the lock and remove the upper housing from the lock housing.

NOTICE:
- **Do not apply too much force to the lock arm.**
- **Mark the upper housing and lower housing to prevent mistakes when putting them together.**

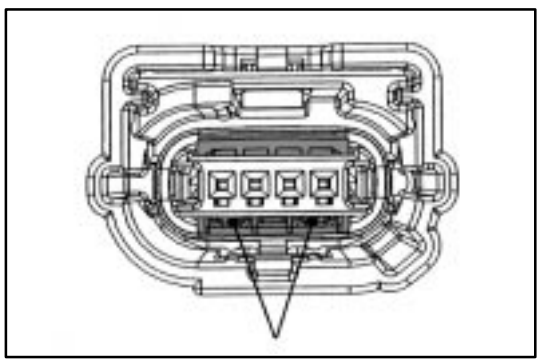

Type M (0.64 of Splash Proof Connector)

(1) Release Terminal retainer.
Insert Special Tool at the location shown in the figure left.

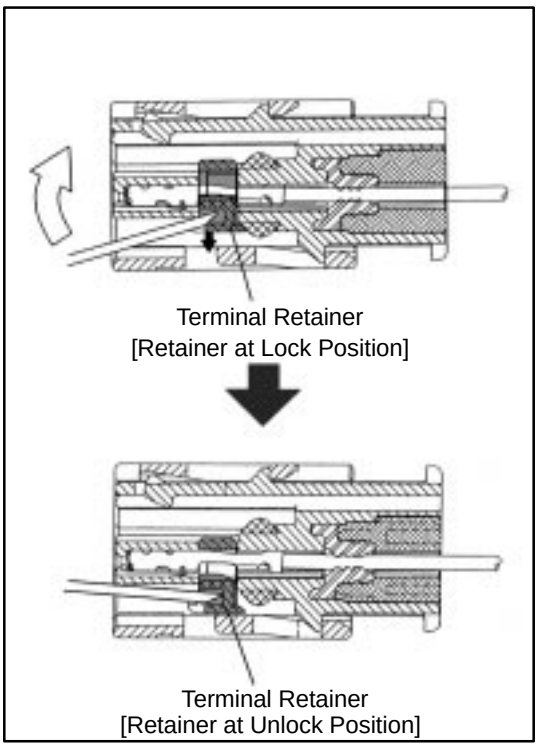

Move Special Tool in the direction of arrow.

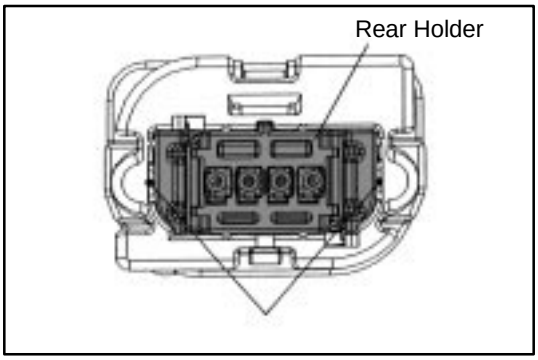

(2) Release Rear holder.
Insert Special Tool at the location shown in the figure left.

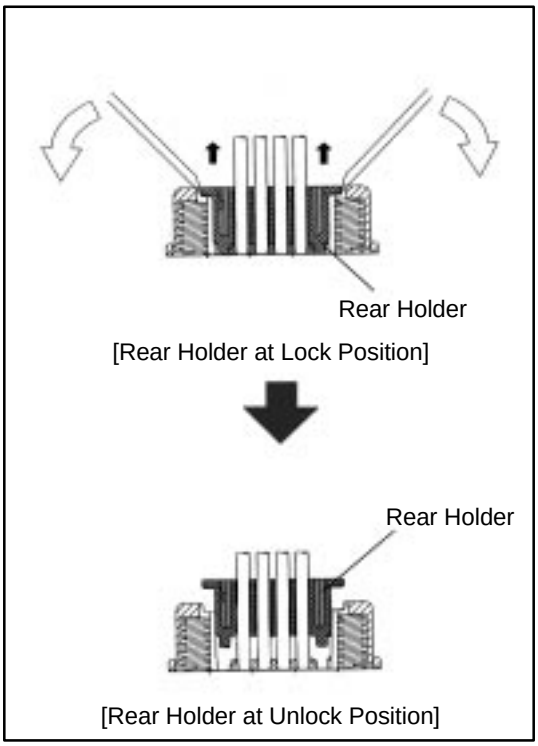

Move Special Tool in the direction of arrow.

NOTICE:

- **Do not remove Rear holder from Connector housing.**
- **If Rear holder completely comes off the housing, replace Connector with a new one.**

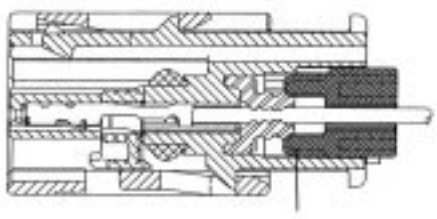

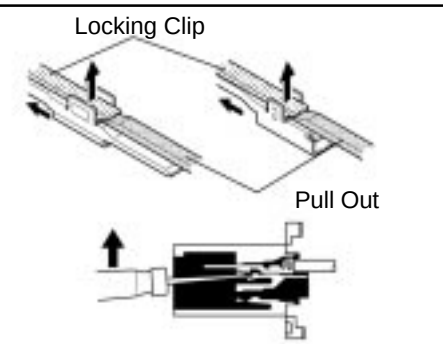

4. Disconnect Terminal from Connector

(a) Determine the primary locking system from the charts.
1. Lock Located on terminal
2. Lock Located on connector
3. Method of entry and operation

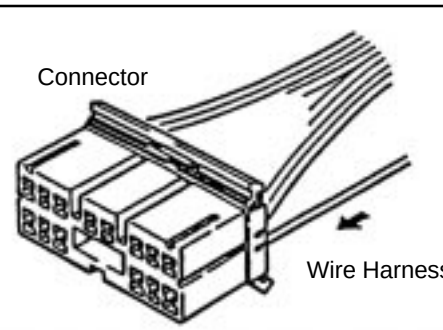

(b) Push the terminal gently into the connector and hold it in this position.

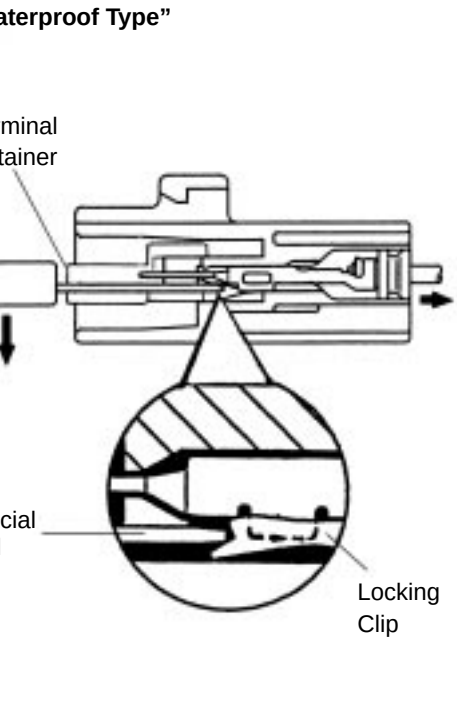

(c) Insert the special tool into the connector in the direction shown in the chart.

(d) Move the locking clip to the unlock position and hold it there.

NOTE: Do not apply excessive force to the terminal. Do not pry on the terminal with the special tool.

(e) Carefully withdraw the terminal from the connector by pulling the lead toward the rear of the connector.

NOTE: Do not use too much force. If the terminal does not come out easily, repeat steps (a) through (e).

”Non–Waterproof Type”

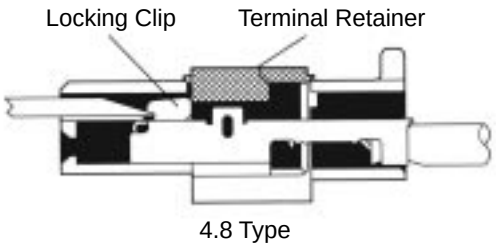

4.8 Type

0.64 Type

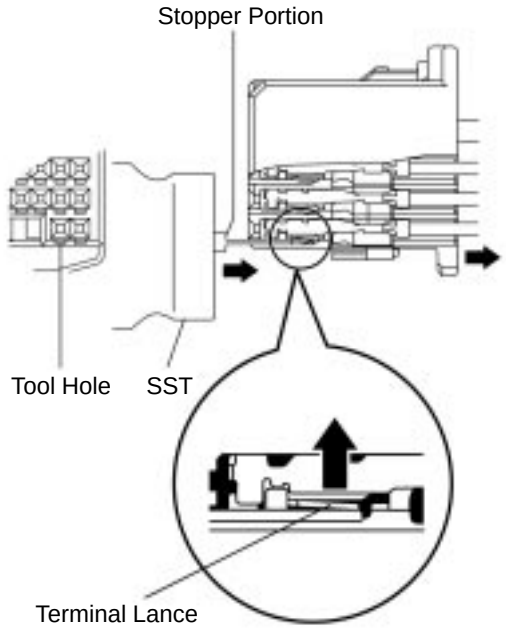

(f) Insert the SST into the connector in the direction shown in the chart.

(g) Insert the SST fully to the tool hole, and push the terminal lance.

NOTICE:

- **The terminal has a lance shape, therefore, the housing may be damaged and the terminal may get stuck if forcibly pried by wires etc.**
- **Insert the SST so that the stopper portion surface is facing up.**

(h) Carefully withdraw the terminal from the connector by pulling the lead toward the rear of the connector.

NOTICE:
Removal of the terminal from housing cavity will cause damage to the wire seal section, deteriorating waterproofing performance. Replace the connector with a new one.

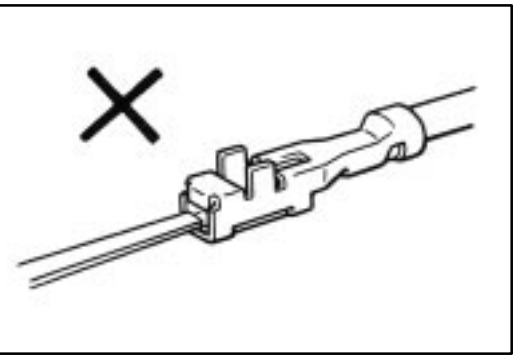

NOTICE:
Do not insert the special tool into the female terminal box. If you do so, replace the terminal with the new one whether the terminal is broken or not.

Non–waterproof type TLC housing

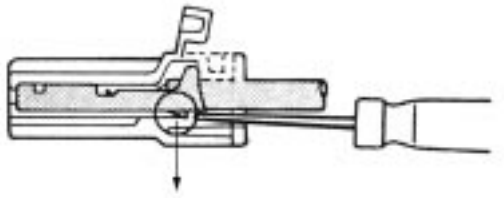

Insert the tool from wire harness side

NOTICE:
As for Non–waterproof type TLC housing, insert the special tool into the housing from wire harness side.

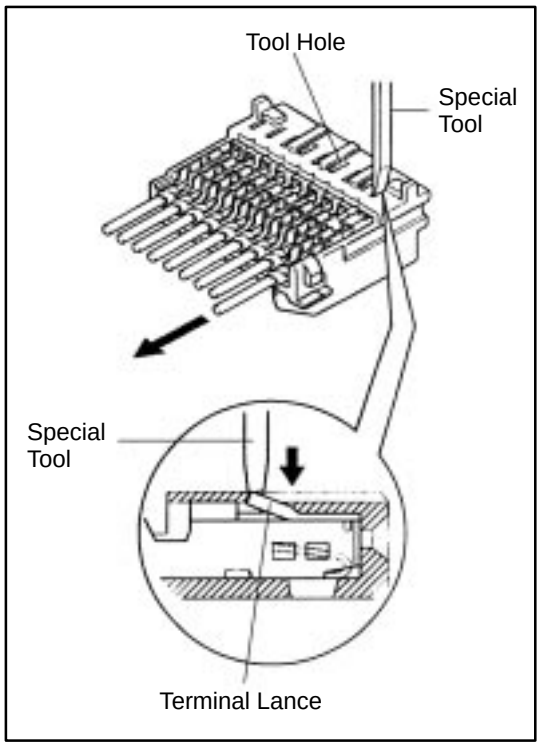

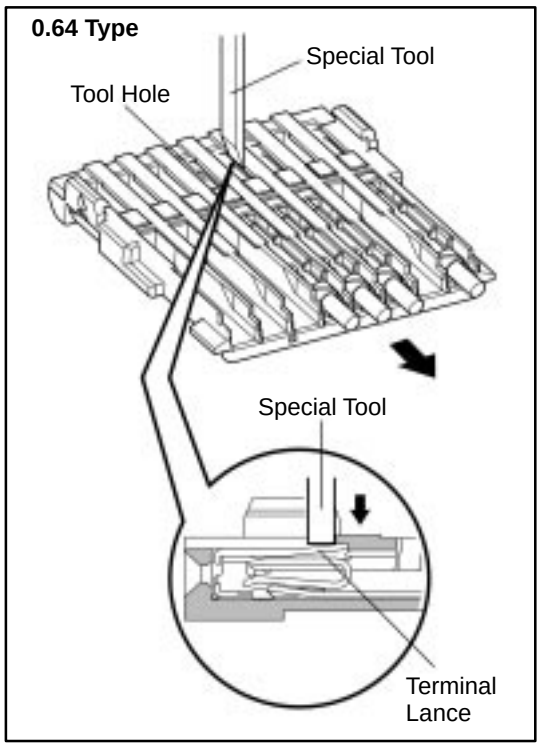

Insulation Displacement Connector Type

(a) Using a special tool, push the terminal lance from the tool hole.

(b) Carefully withdraw the terminal from the connector by pulling the lead toward the rear of the connector.

NOTICE:

- **Do not use too much force. If the terminal does not come out easily, repeat step (a).**
- **Always change the wire with the repair wire, in accordance with page B–27.**

Terminal Deformation

(1) Terminal Bending in Vertical Direction



1˚ or less



1˚ or less

(2) Terminal Bending in Horizontal Direction



3˚ or less

5. Inspect the terminal and the connector for damage.

NOTE:

- The locking clip is easily damaged.
- Do not reuse the damaged part.

Step 3. Replace the terminal.

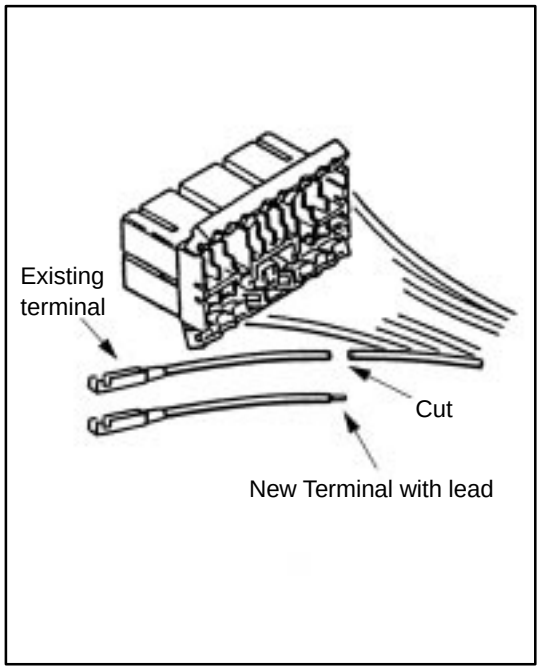

1. Cut the Old Terminal from the Harness.

(a) Use the new wire lead as a guide for proper length.

NOTE: If the length of wire removed is not approximately the same length as the new piece, the following problems may develop:

- Too short — tension on the terminal, splice, or the connector, causing and open circuit.
- Too long — excessive wire near the connector, may get pinched or abraded, causing a short circuit.

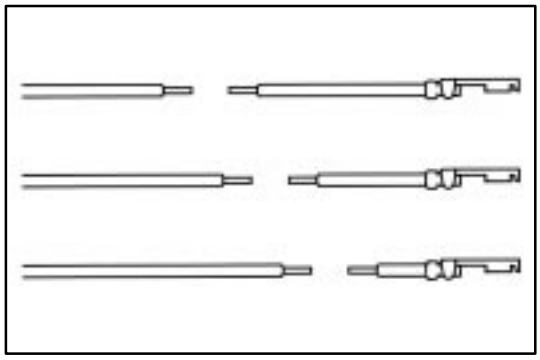

HINT: When connecting a wire harness at there or more spots to the same connector, cut the wire harness as shown on the left.

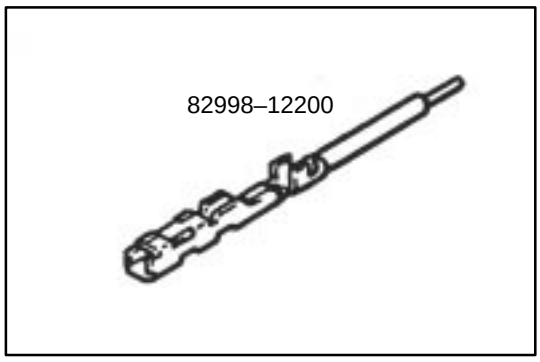

2. Select the correct replacement terminal with lead, from the supply parts.

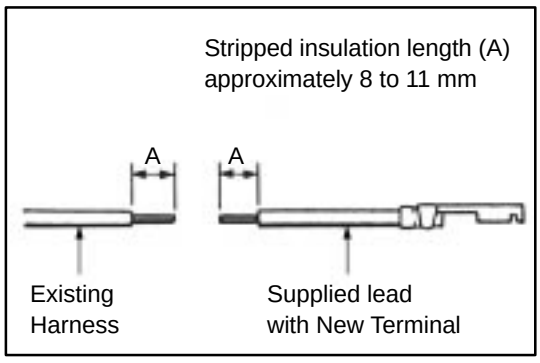

3. Strip insulation from wire on the harness and replacement terminal lead.

Start stripping at least 8 mm (0.31 in.) to 11 mm (0.43 in.) away from the end of the existing harness at vehicle side and also from the end of the repair wire.

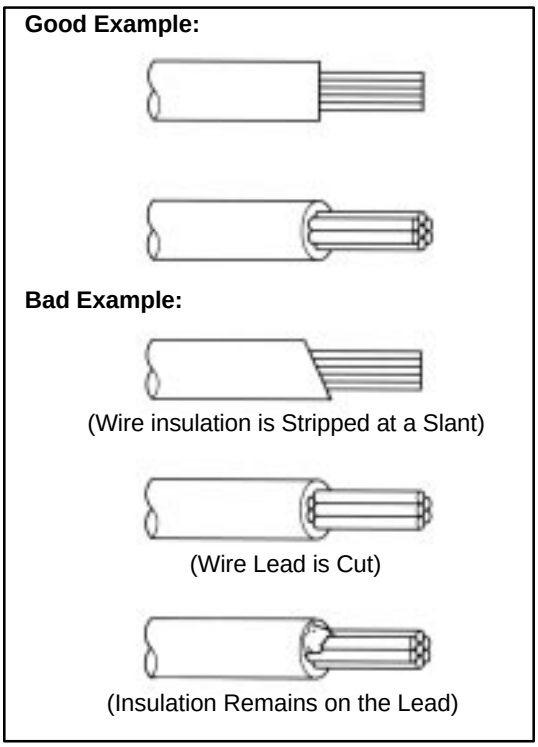

NOTICE:
Take care not to damage the wire when stripping the wire harness lead. After finishing the operation, visually inspect the wire. If there is any damage, perform the operation again.

HINT:
If the wire size is not known, start with largest stripper hole and work down until a clean strip of the insulation is removed without nicking or cutting the wire lead.

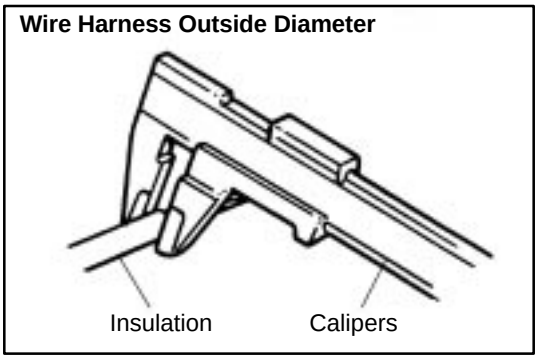

4. Select Correct Size of Sleeve from the Supply Parts.

(a) Measure the diameter of wire by using the measuring device as following:

- When size is based on the outside diameter of the wire harness

  Measure the outside diameter of the wire harness by placing a measuring device, such as a micrometer or Vernier Caliper, across the diameter of the insulation on the lead and taking a reading.

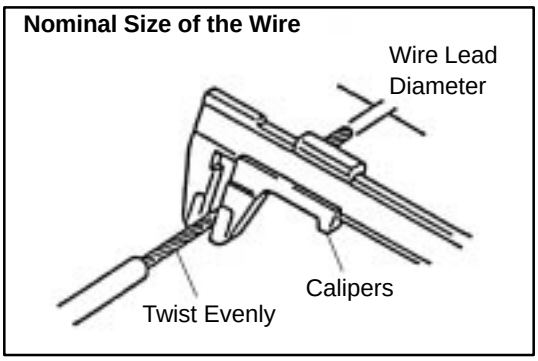

- When size is based on the nominal size of the wire lead.

  Measure the diameter of the wire lead by placing a measuring device, such as a micrometer or Vernier Caliper, across the diameter of the wire lead and taking a reading.

HINT:
To calculate the ”nominal size” of wire

$$\text{Nominal size} = \frac{3.14 \times (\text{Diameter of wire lead})^2}{4}$$

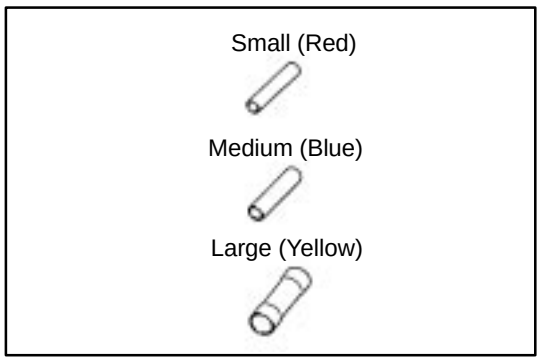

(b) Use the table to determine proper sleeve size

	Part Number	Nominal size of wire (Outside Diameter of wire)
Small	82999–12010	0.3 or less (1.0 – 0.2 mm)
Medium	82999–12020	0.5 – 1.25 (2.0 – 1.0 mm)
Large	82999–12030	2 or more (5.0 – 3.0 mm)

NOTE: For details, refer to sleeve size table on item 4 of STEP 1

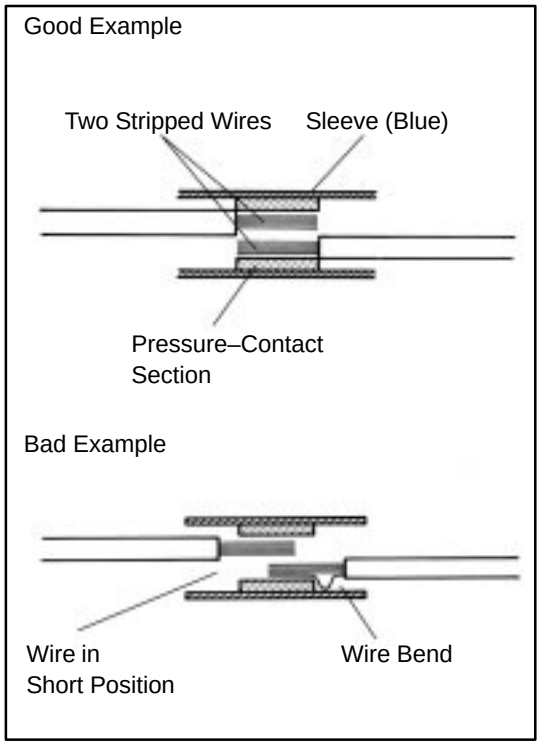

5. Crimp the Replacement Terminal Lead to the Harness Lead.

(a) Overlap the two stripped wire ends inside the sleeve as illustrated on the left.

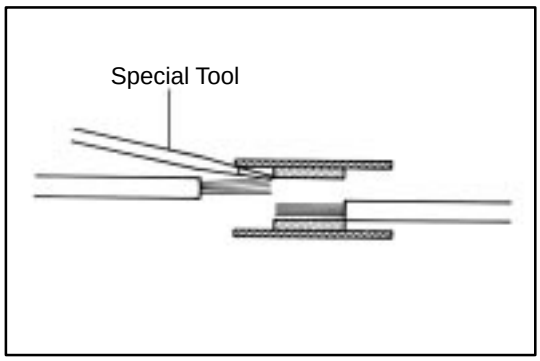

HINT: You might find it easier if you use a miniature special tool as a guide as you insert wires into the sleeve.

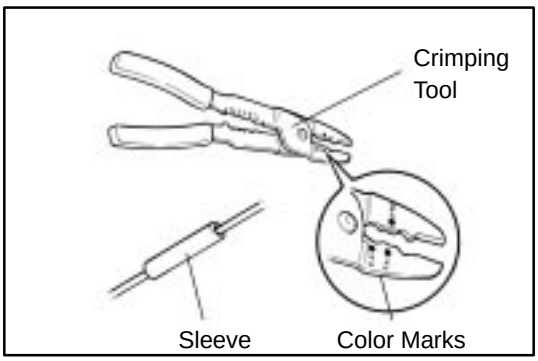

(b) The crimping tool (AMP Part No. 169060) has color marks on it. Place the sleeve in the correct section of the tool according to the color of the sleeve itself.

HINT: For the crimping tool, AMP ”Part No. 169060” is convenient to use.

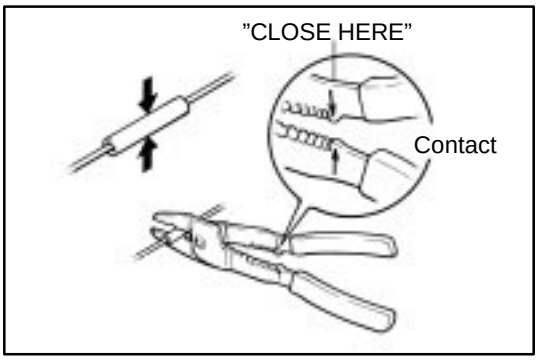

(c) With the center of the sleeve correctly placed between the crimping jaws, squeeze the crimping tool until either end comes into contact at the section marked by ”CLOSE HERE”.

HINT: Check to see that the sleeve and wires are still in the correct position before closing the crimping tool ends with steady pressure.

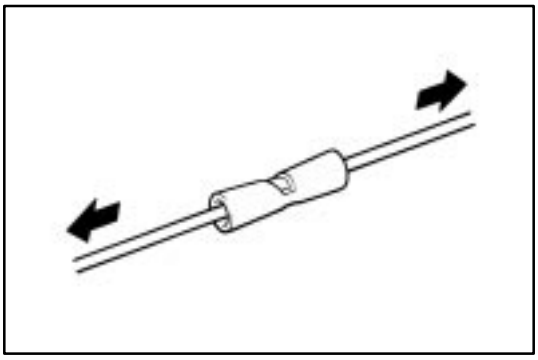

(d) Pull the joined wires to either end. Make sure that they are joined firmly by the sleeve.

NOTICE:
If the joined wires come loose the splice is defective, so replace the sleeve and repeat the procedure.

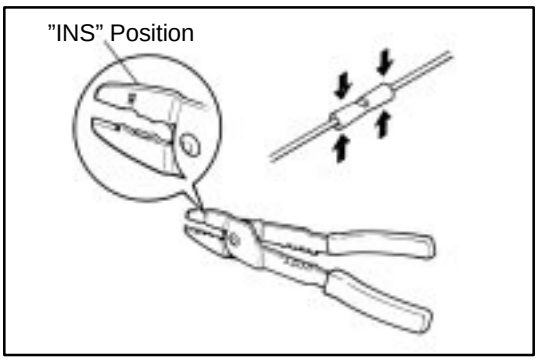

(e) Crimp both ends of the sleeve with the crimping tool at the ”INS” position.

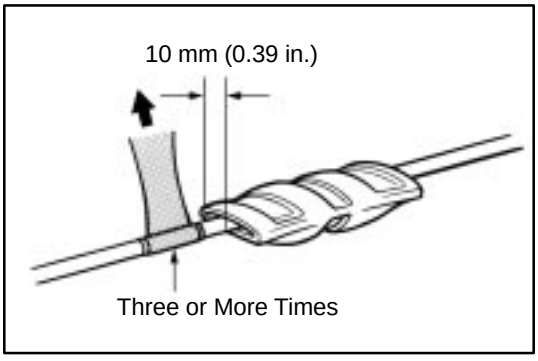

6. Protect Joined Section

Wrap silicon tape around the joins to protect them from moisture.

NOTE: This job is required in repairs of the engine compartment, under the floor and other moisture entry positions.

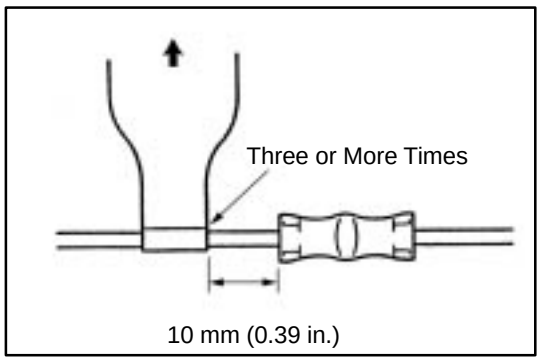

HINT:

- Before starting the operation, thoroughly wipe dirt and grease off the sections to be joined.
- If the adhesive surfaces of two tapes come in contact they will stick together and will not come apart, so do not remove the backing film except when using the tape.
- Do not let oil and dust, etc. get on the tape surface.

(a) Ready about 100 mm (3.94 in.) of silicon tape (Part No. 08231–00045) and peel off the film.

(b) Stretch the silicon tape until its width is reduced by half.

(c) About 10 mm (0.39 in.) from the end of the sleeve, wrap the silicon tape around the sleeve three or more times while stretching the tape.

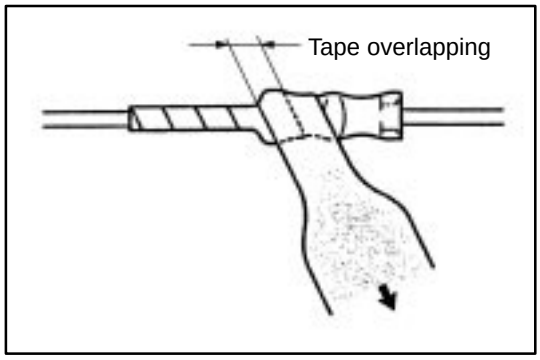

(d) Wrap the remaining part of the sleeve with half of the tape overlapping at each turn.

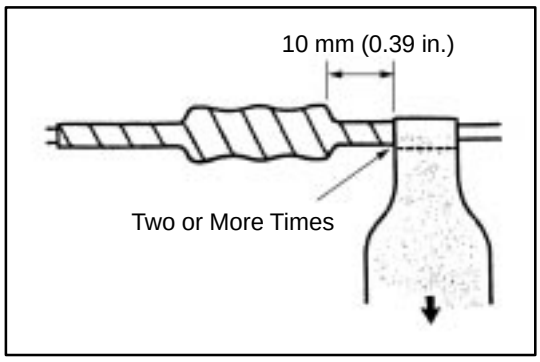

(e) Firmly wrap the tape two times or more about 10 mm (0.39 in.) from the other end of the sleeve, then wrap the tape back towards the start again and firmly finish winding the tape around the center of the sleeve.

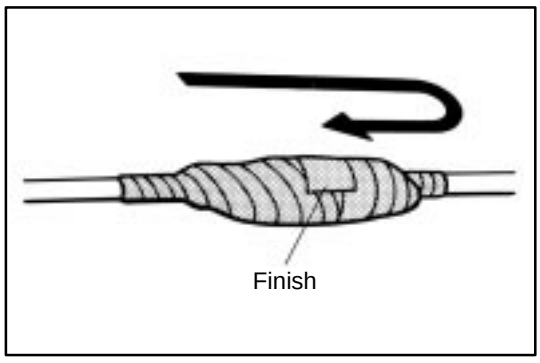

Step 4. Install the terminal into the connector.

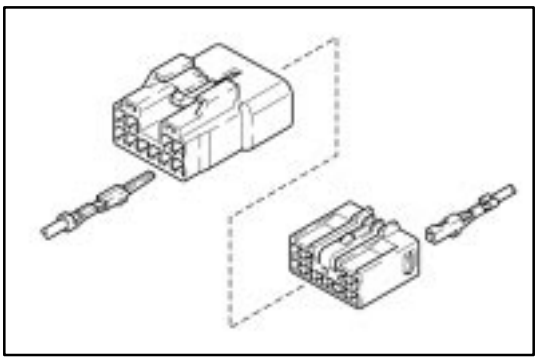

HINT:

(a) Make sure the terminal is positioned correctly.

(b) Insert the terminal until the locking clip locks firmly.

(c) Insert the terminal with terminal retainer in the temporary lock position, if equipped.

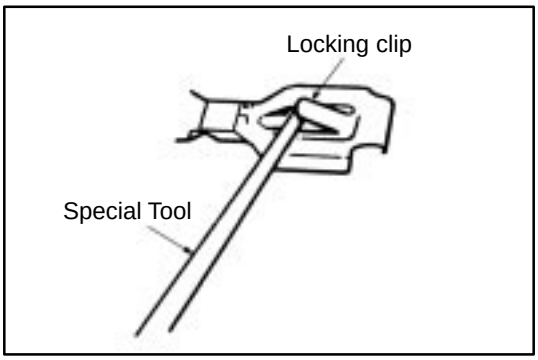

NOTE: If reusing a terminal, check that the locking clip is still in good condition and in the proper position.

(a) If it is on the terminal and not in the proper position, use the special tool to gently bend the locking clip back to the original shape.

(b) Check that the other parts of the terminal are in their original shape.

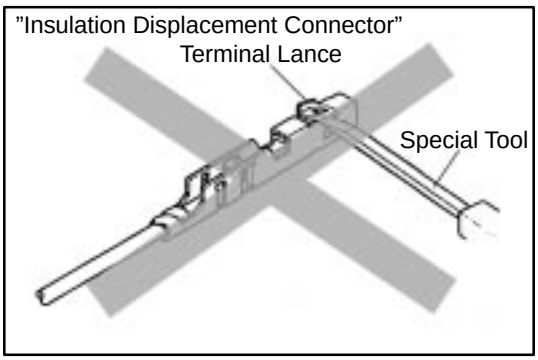

NOTICE:
Do not readjust or reuse the terminal lance of the insulation displacement connector type terminal. Always change the wire with the repair wire.

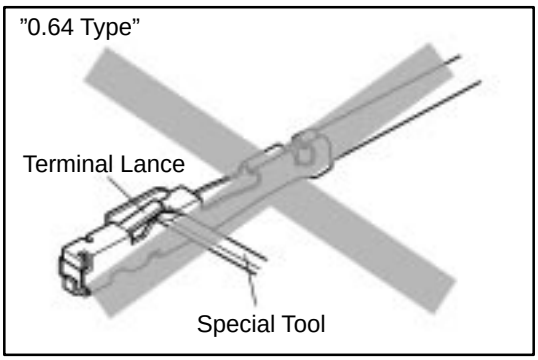

NOTICE:
As for 0.64 type terminal, do not adjust the terminal lance with the special tool.

Splash Proof Type Connector

NOTICE:

- **Removal of the terminal from housing cavity will cause damage to rubber plug material (the wire seal), deteriorating waterproofing performance. Be sure to replace the housing with a new one.**
- **Check the withdrawn terminal for the following if trying to use it again.**
  - **It is free of deformation and damage**
  - **It is free of adherents such as rubber plug material (wire seal)**
  - **Replace any deformed terminal.**

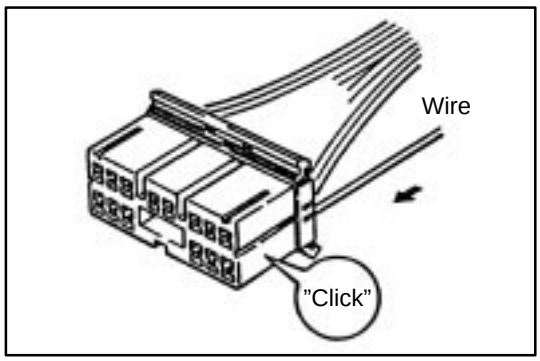

1. Push the Terminal into the Connector until you hear a ”click”.

NOTE: Not all terminals will give and audible ”click”.

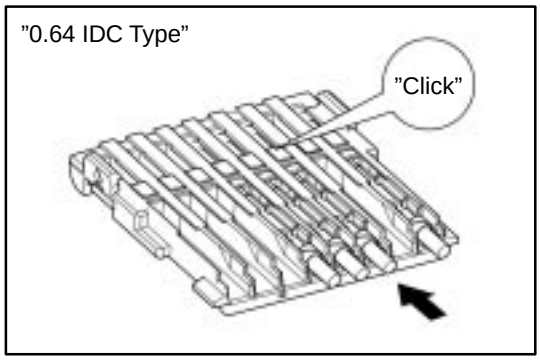

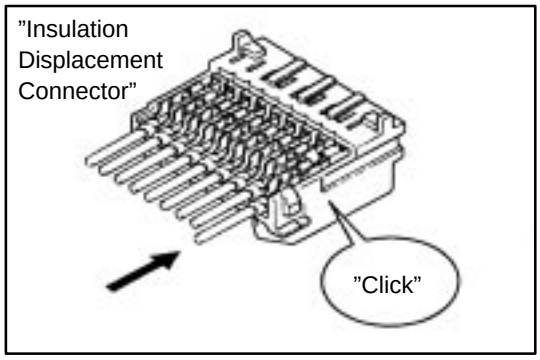

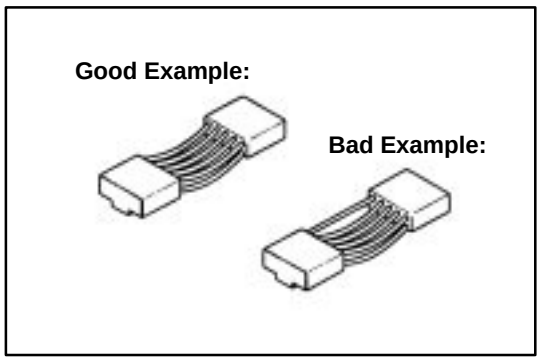

NOTICE:

- **After repairing, never let only one harness stretch.**
- **In cese that it becomes short, do over again using the repair wire.**

2. Double Locking Type Connector (with terminal retainer or double locking device)

The connector is fitted with a terminal retainer, or a double locking device, it is in the temporary lock position at insert the terminal.

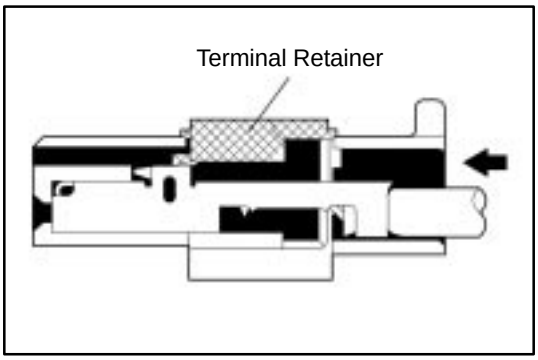

Type A (For 1.0, 1.0II, 1.3, 1.8, 2.3II 4.8 and 8.0 of Non–Waterproof Type Connector)

(a) Insert the terminal.

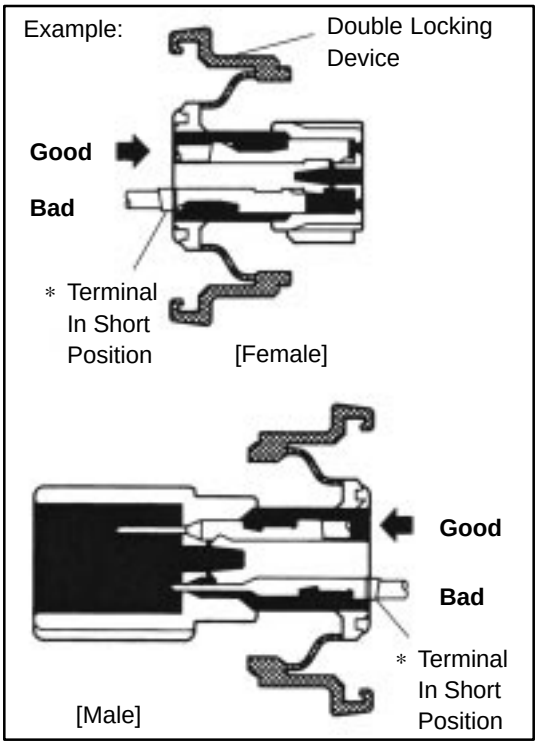

HINT:

1. Make sure the terminal is positioned correctly.
2. Insert the terminal with terminal retainer in the temporary lock position.

(b) Insert the terminal until the locking clip locks firmly.

HINT:

1. Pull the terminal back gently to check whether it is locked correctly.
2. If it cannot be inserted easily, check the terminal and the connector for damage.

NOTE: If the terminal to locking clip does not lock firmly, the double locking device cannot lock or terminal retainer does not lock at full lock position so the terminal backs out from connector.

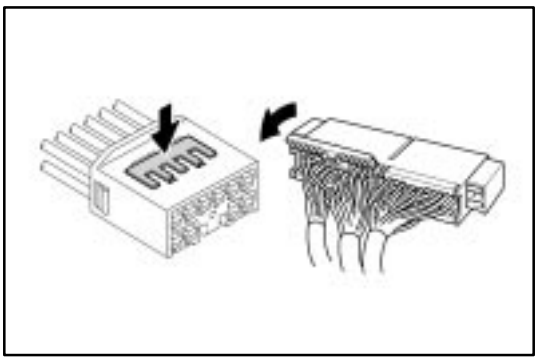

(c) Close terminal retainer or double locking device.

The connector is fitted with a terminal retainer, or a double locking device, return it to the full lock position.

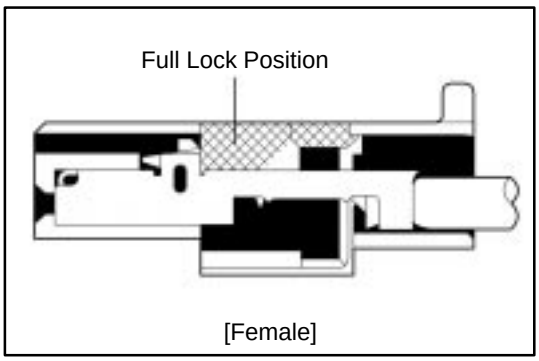

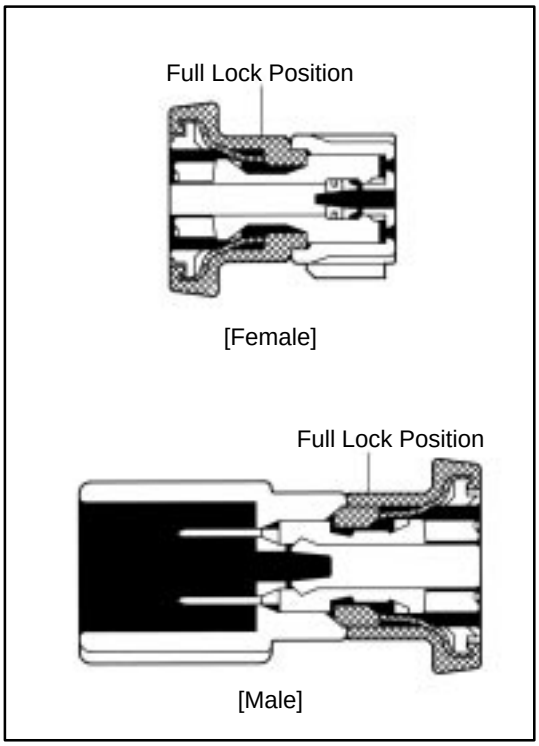

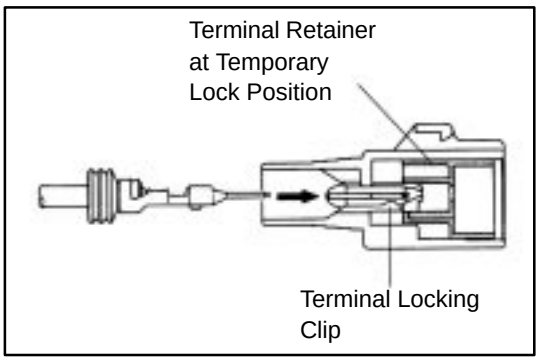

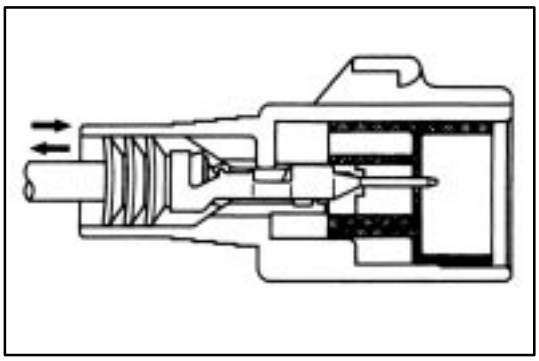

Type B (For 1.8, 2.3, 2.3II, 4.8, 6.3 and 8.0 of Waterproof Type)

(For Male Connector)

(a) Insert the terminal.

HINT:

1. Make sure the terminal is positioned correctly.
2. Insert the terminal with terminal retainer in the temporary lock position.

(b) Insert the terminal until the locking clip locks firmly.

HINT:

1. Pull the terminal back gently to check whether it is locked correctly.
2. If it cannot be inserted easily, check the terminal and the connector for damage.

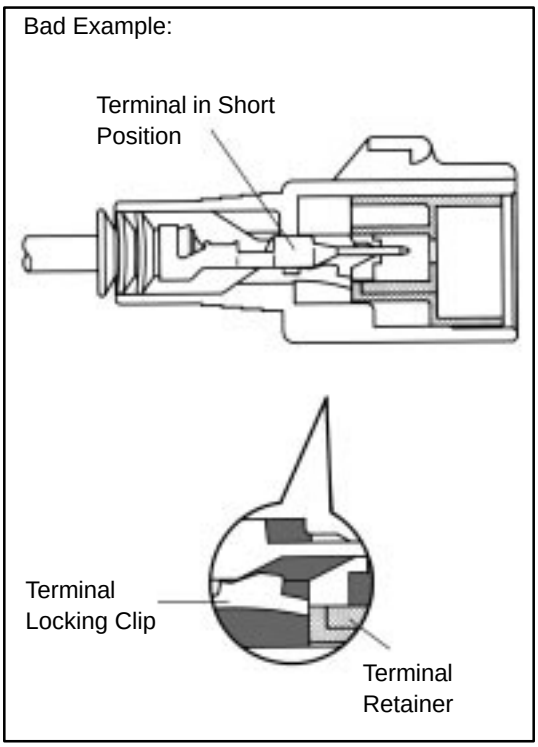

NOTE: If the terminal to locking clip does not lock firmly, terminal retainer can not lock at full lock position so the terminal backs out from connector.

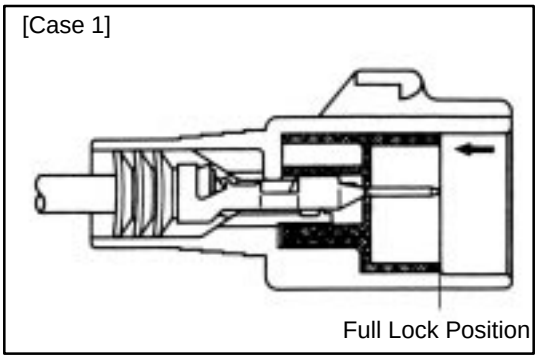

(c) ”For Case 1”
Push the terminal retainer in to the full lock position.

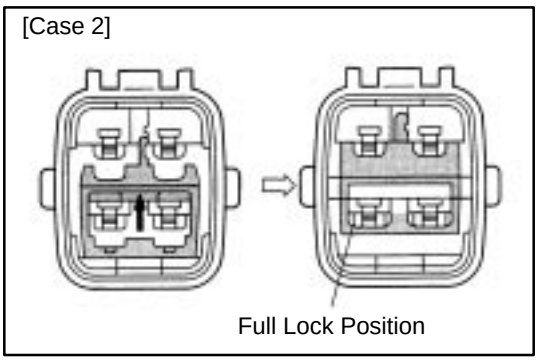

”For Case 2”
Raise the terminal retainer up to the full lock position.

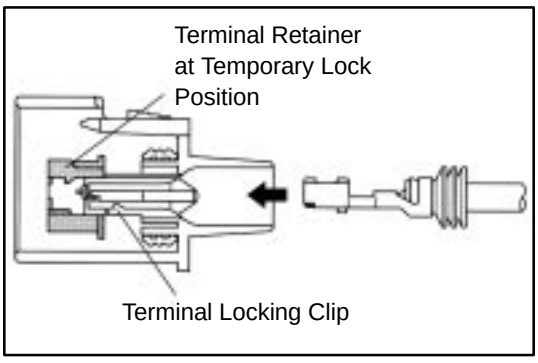

(For Female Connector)

(a) Insert the terminal.

HINT:

1. Make sure the terminal is positioned correctly.
2. Insert the terminal with terminal retainer in the temporary lock position.

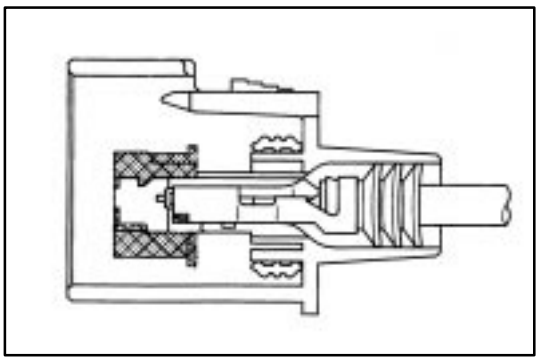

(b) Insert the terminal until the locking clip locks firmly.

HINT:

1. Pull the terminal back gently to check whether it is locked correctly.
2. If it cannot be inserted easily, check the terminal and the connector for damage.

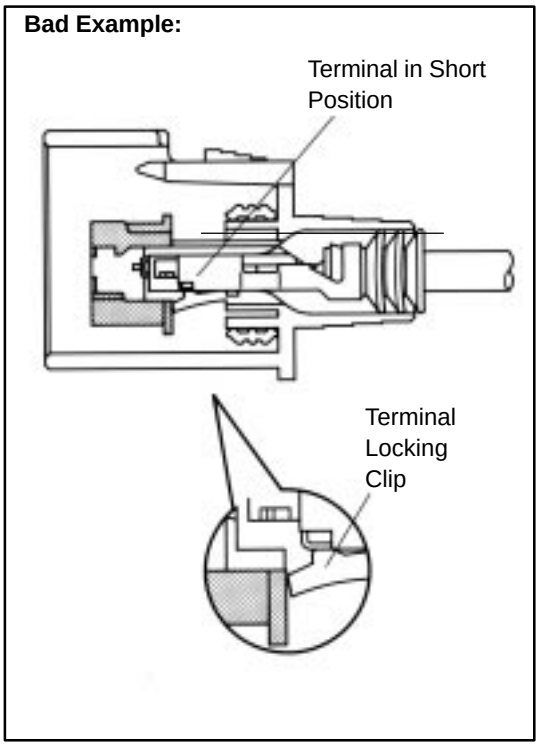

NOTE: If the terminal to locking clip does not lock firmly, terminal retainer can not lock at full lock position so the terminal backs out from connector.

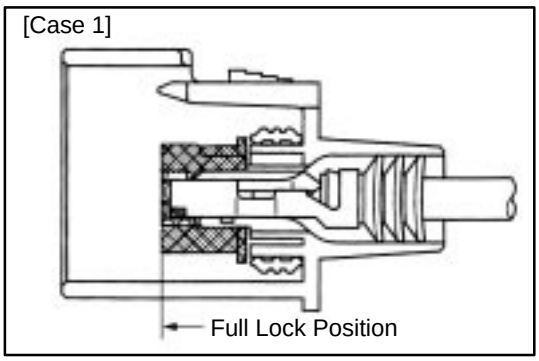

(c) ”For Case 1”
Push the terminal retainer in to the full lock position.

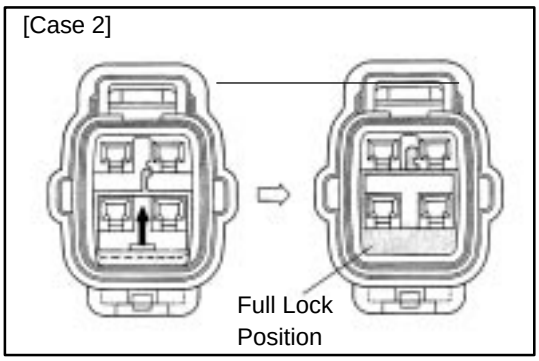

”For Case 2”
Raise the terminal retainer up to the full lock position.

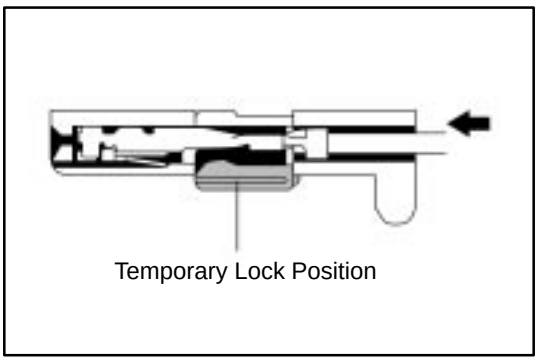

Type C (For 0.64 Type Connector)

(a) Insert the terminal.

HINT:

1. Make sure the terminal is positioned correctly.
2. Insert the terminal with terminal retainer in the temporary lock position.

(b) Insert the terminal until the terminal lance locks firmly.

HINT:

1. Pull the terminal back gently to check whether it is locked correctly.
2. If it cannot be inserted easily, check the terminal and the connector for damage.

NOTE: If the terminal to terminal lance does not lock firmly, the double locking device cannot lock or terminal retainer does not lock at full lock position so the terminal backs out from connector.

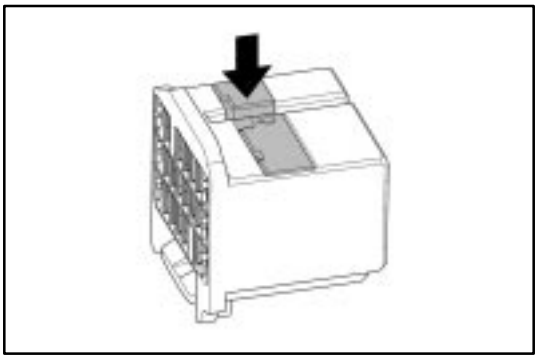

(c) Close terminal retainer.

The connector is fitted with a terminal retainer, return it to the full lock position.

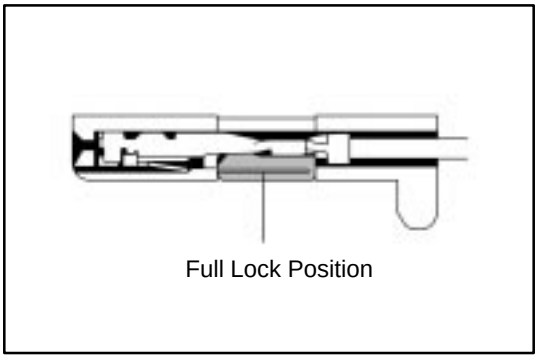

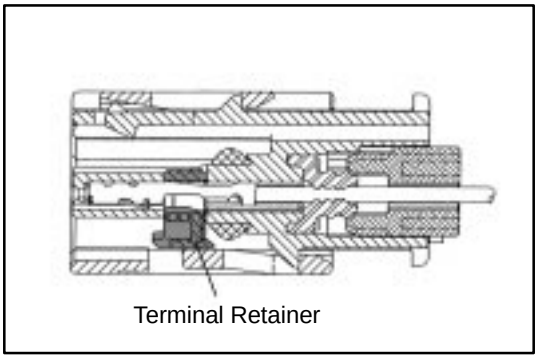

Type D (For 0.64 Splash Proof Type Connector)

(a) Verify that the terminal retainer is at unlocked position.

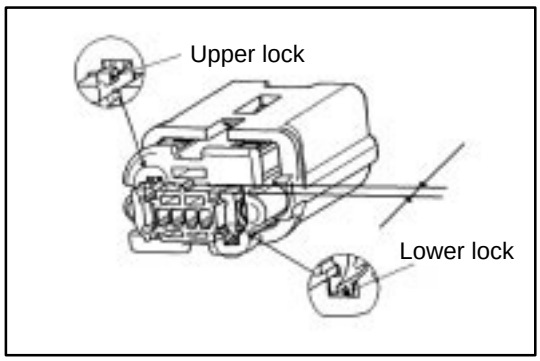

(b) Verify that Rear Holder is at unlocked position.

NOTICE:
If Rear holder or wire seal has been removed, replace it with new one.

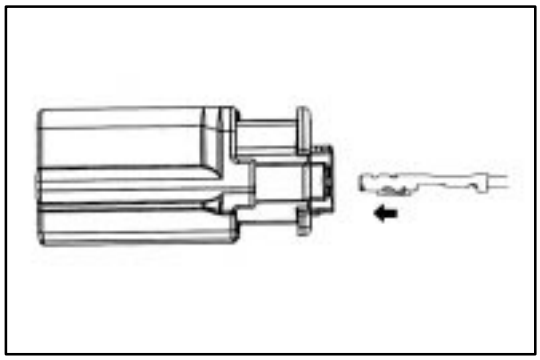

(c) Insert the terminal fully into the housing until it is locked.

HINT: The terminal has a longer insertion stroke than conventional ones.

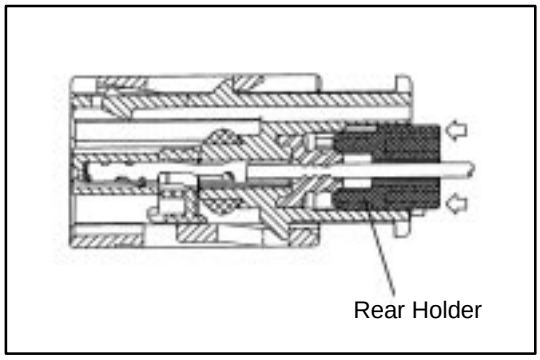

(d) Set Rear holder to locked position.
Push Rear holder in the direction of arrow until it is locked.

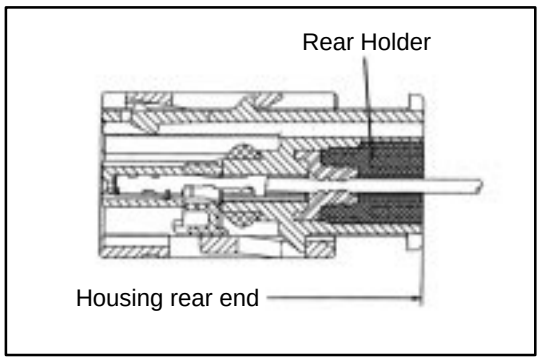

(e) Verify that Rear holder is at the specified position.
The rear end of Rear holder is flush with the rear end of Housing.

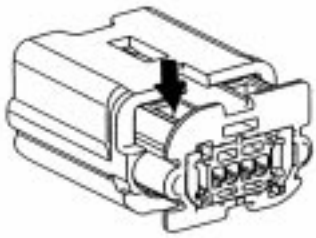

Lock check position, upper

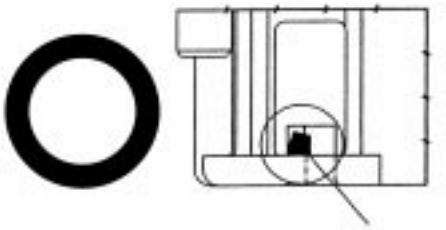

Lock normal engagement position

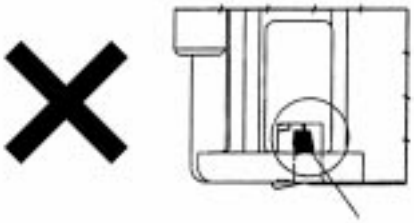

Incomplete lock engagement

Verify that the lock (upper side) is at the specified position under locked status.

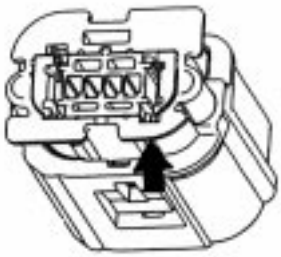

Lock check position, lower

Lock normal engagement position

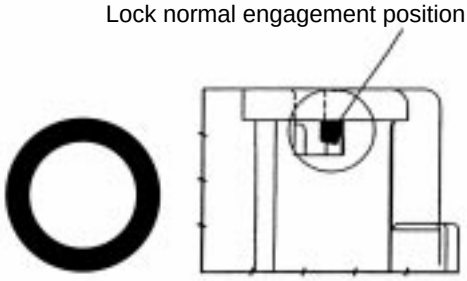

Incomplete lock engagement

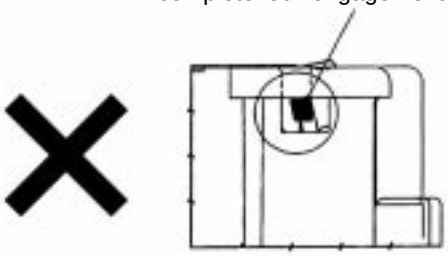

Verify that the lock (lower side) is at the specified position under the locked status.

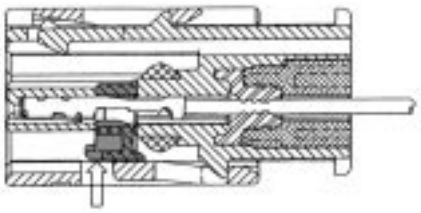

Insert Special Tool

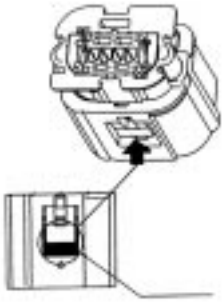

Special Tool hole (U shaped)

(f) Set Terminal retainer to Lock position.
Insert Special tool into the hole specified in the left and push Terminal retainer.

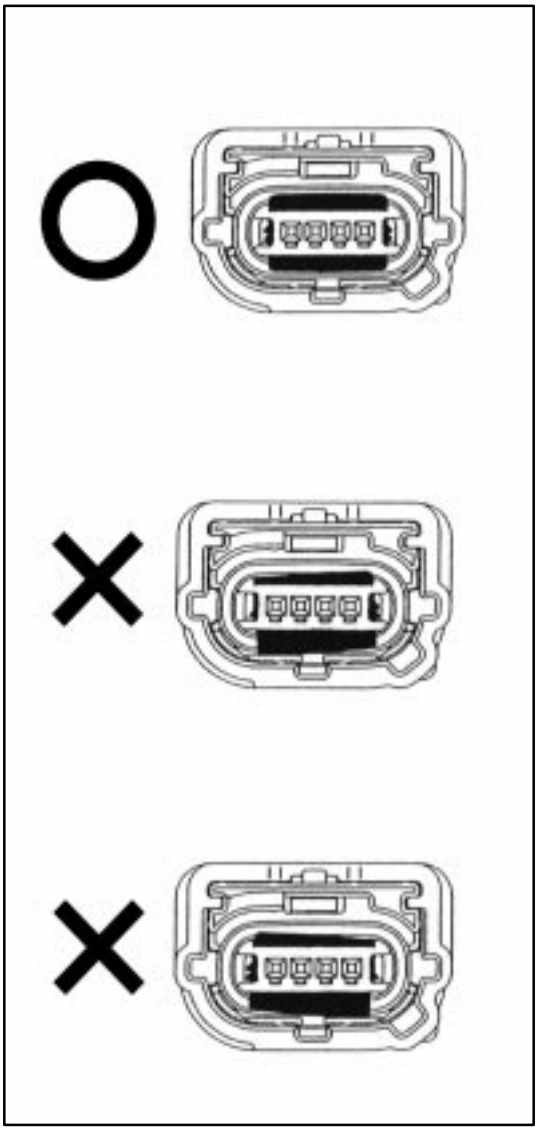

(g) Verify that Terminal retainer is inserted to the specified position.

NOTICE:
If Terminal retainer is stopped at its middle of insertion, holding wire, push Terminal to help it for full insertion.

SPECIAL EXAMPLE

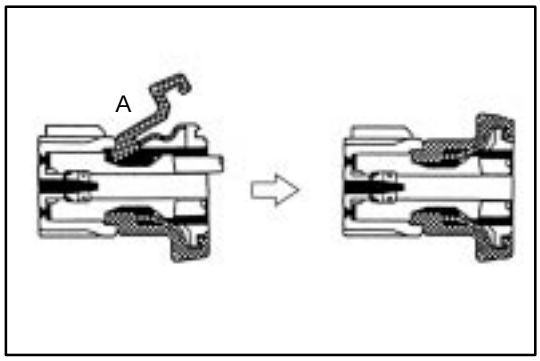

- First fit the section A.

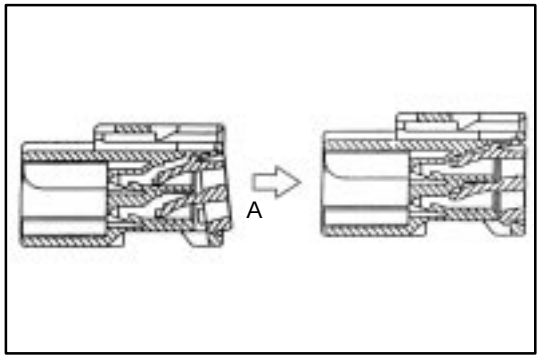

- Install the lock of the section A first.

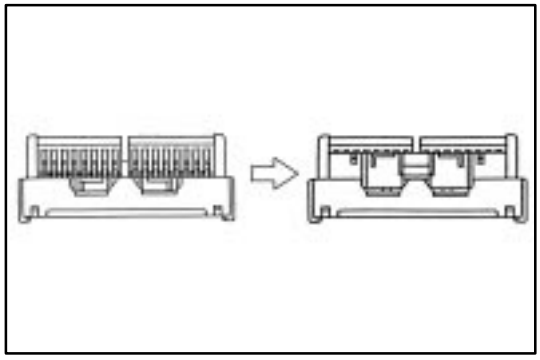

- Install the lock of the retainer and pull the white cover until you hear a click sound.

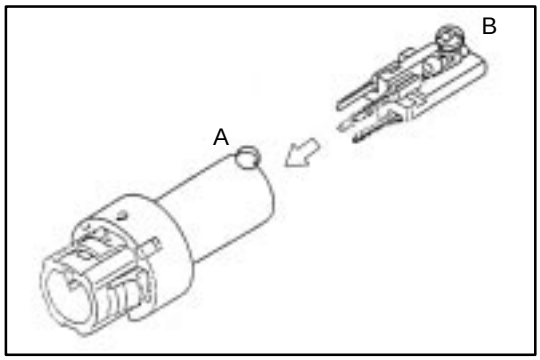

- Install the convex part (A) of the outer part correctly to the section B of the inner part.

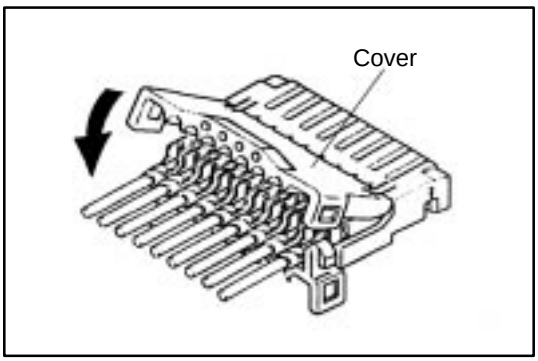

Insulation Displacement Connector

w/ Cover : CLOSE COVER

NOTICE:
Securely lock it

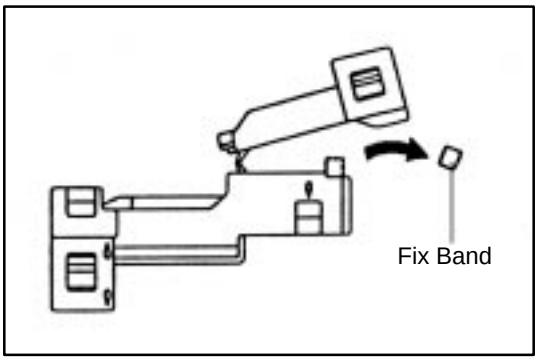

HINT:
When replacing it to a new connector, cut off the fixing band without leaving it.

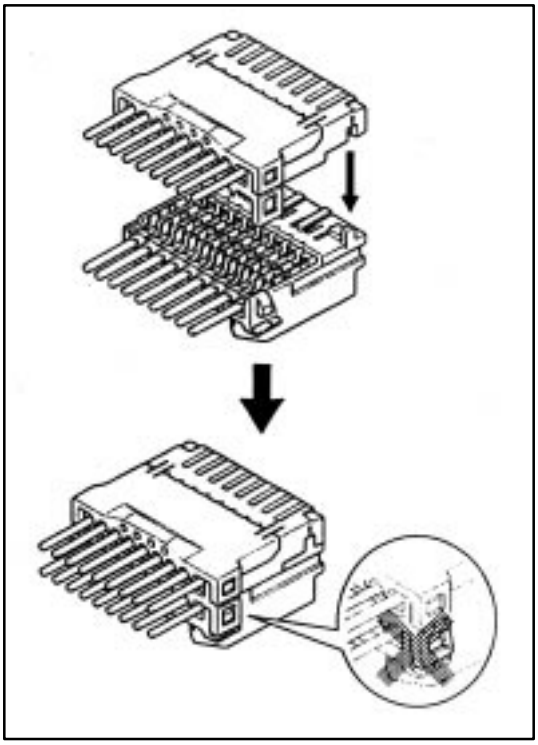

UNITE CONNECTOR

Make the projection of the front lock of the upper housing meet the ditch of the front lock of the lower housing and fix the rear lock.

NOTICE:

- **After uniting, securely lock it for not leaving the rear lock arm deformed.**
- **Make sure that the terminals will not become loose by pulling the wires lightly.**

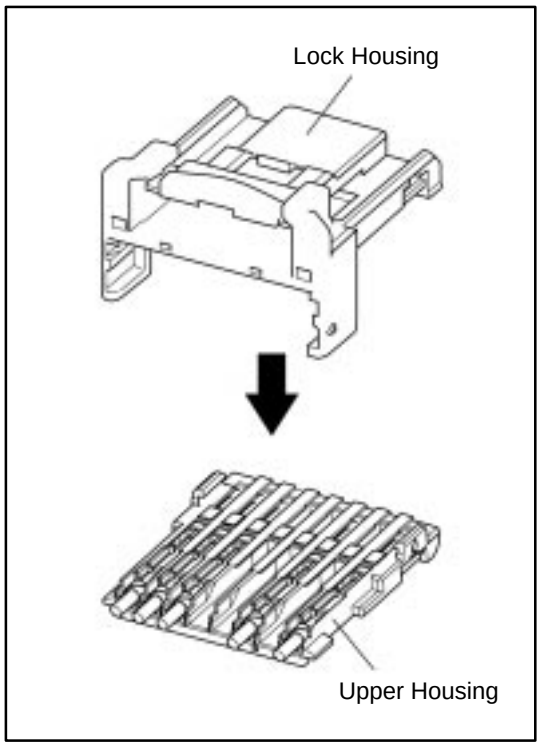

Insulation Displacement Connector (0.64 Type)

(a) Install the upper housing to the lock housing.

NOTICE:
- **Securely Lock it.**
- **Be careful not to mistake the upper housing and lower housing when putting together.**

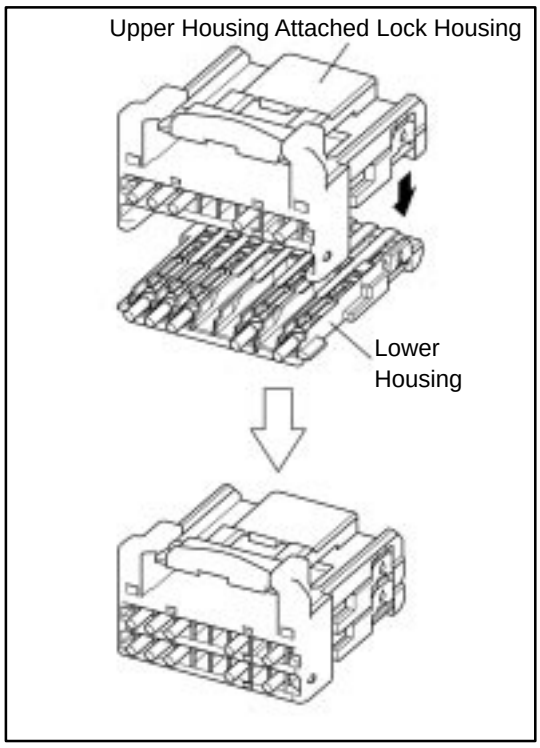

(b) Make the projection of the front lock of the upper housing attached lock housing meet the ditch of the front lock of the lower housing and fix the rear lock.

NOTICE:
- **Afteruniting, securely lock it for not leaving the rear lock arm deformed.**
- **Make sure that the terminals will not become loose by pulling the wires lightily.**
- **Be careful not to mistake the upper housing and lower housing when putting together.**

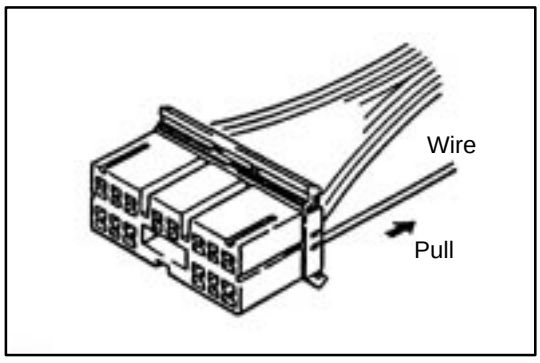

3. When properly installed, pulling gently on the wire lead will prove the terminal is locked in the connector.

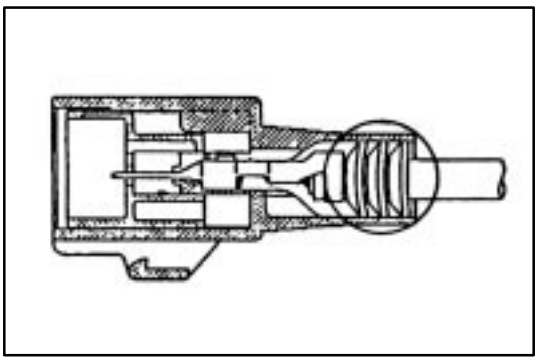

NOTICE:
If you working on the waterproof type, make sure that a rubber plug or a terminal gasket is inserted into the housing securely.

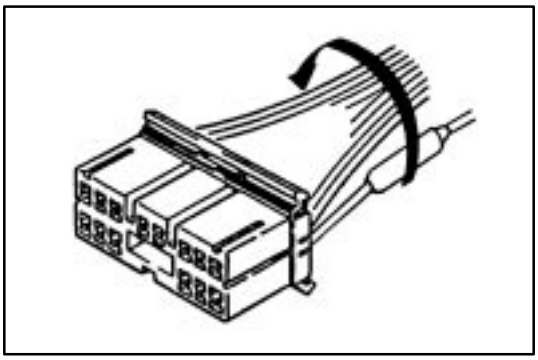

4. Secure the Repaired Wire to the Harness

If the wire is not in the conduit, or secured by other means, wrap vinyl tape around the bundle to keep it together with the other wires.

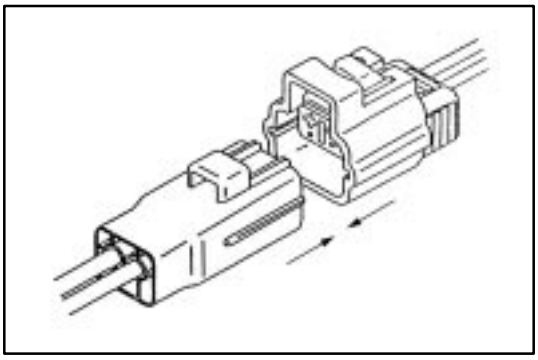

5. Connect Connector

- Fit the male connector to the female terminal.

NOTICE:
- **Do not twist the connector when fitting.**
- **Insert it until fully locked.**

HOW TO INSTALL AND REMOVE SPECIAL CONNECTORS

Low Fit and Lever Type Connector

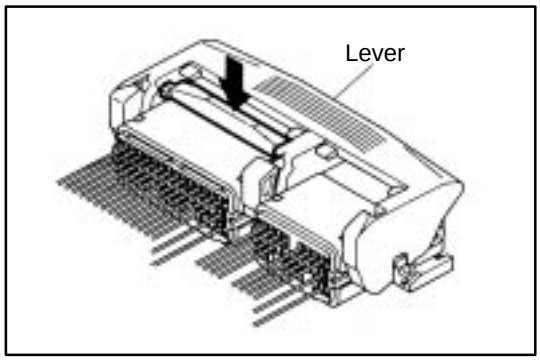

[Case 1]

1. Cut the connection of the connector

(1) Push the place indicated by the arrow.

(2) The lock is released and lever is lifted up.

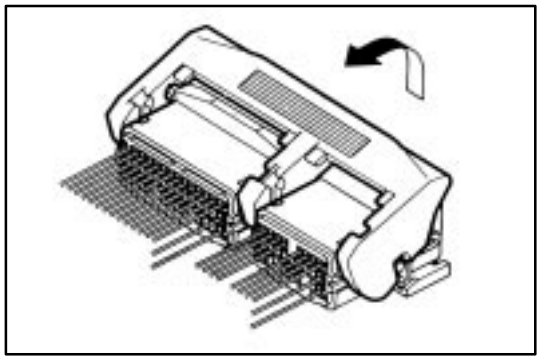

(3) Lift the lever up until it stops.

an

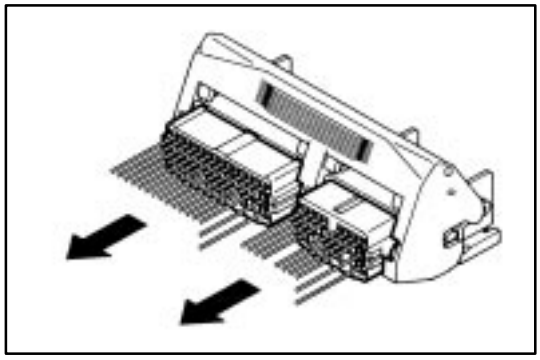

(4) Cut the connection of the connector.

NOTICE:
Do not hold the wire harness to pull it.

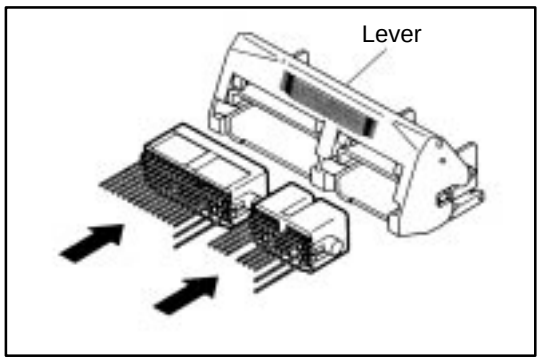

2. Connect the connector

(1) Connect the connector in the condition that the lever is fully lifted up.

HINT: If the lever is locked at the lower position, follow the procedure [Case 1]. (1) to (3) and lift the lever up fully.

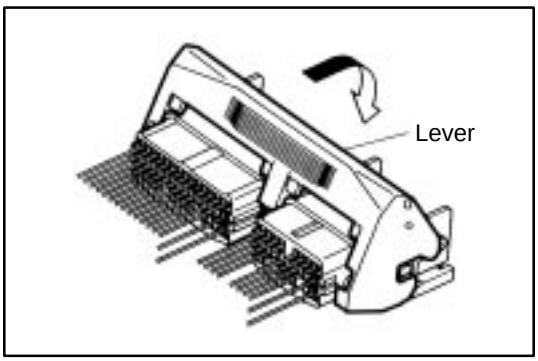

(2) Hold the connector to prevent it from slip off and push it down until you hear a click to lock it.

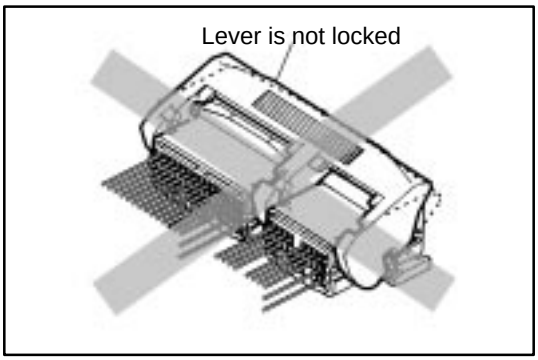

(3) Confirm that the lever is securely locked.

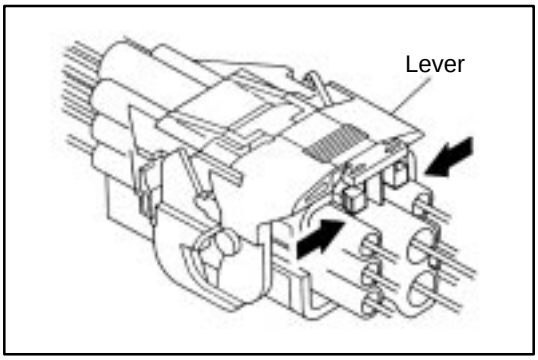

[Case 2]

1. Cut the connection of the connector

(1) Hold the area indicated by the arrow in the illustration

(2) The lock is released and the lever is lifted up.

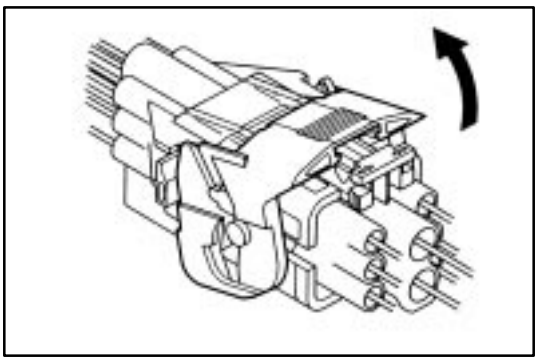

(3) Lift the lever up fully.

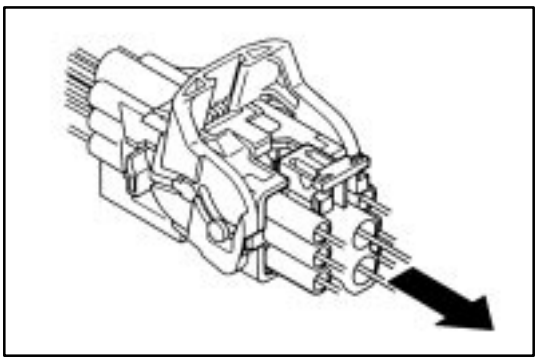

(4) Cut the connection of the connector.

NOTICE:
Do not hold the wire harness to pull it.

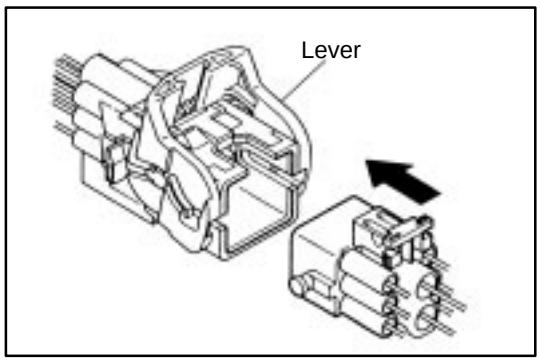

2. Connect the connector

(1) Connect the connector in the condition that the lever is fully lifted up.

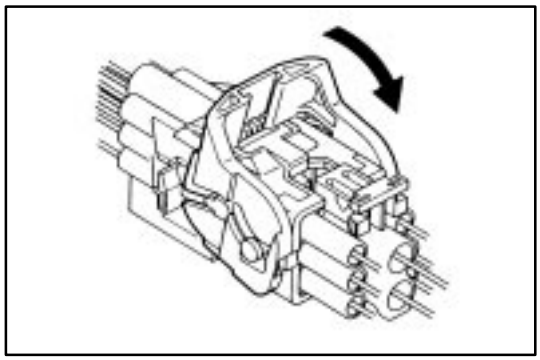

(2) Hold the connector to prevent it from slip off and push it down until you hear a click to lock it.

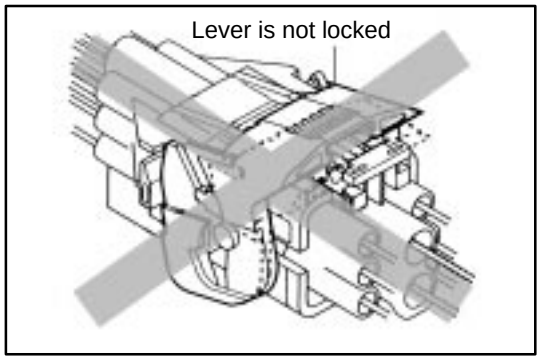

(3) Confirm that the lever is securely locked.

[Case 3]

1. Cut the connection of the connector

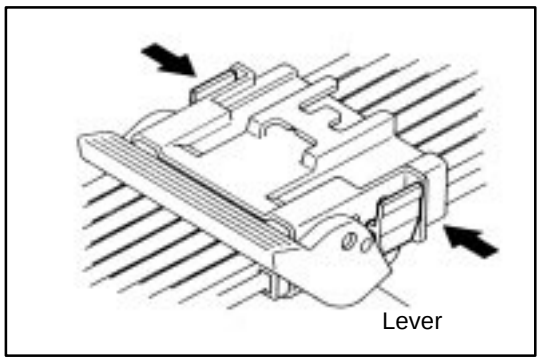

(1) Pick the part indicated in the illustration by fingers.

(2) The lock is released and the lever is lifted up.

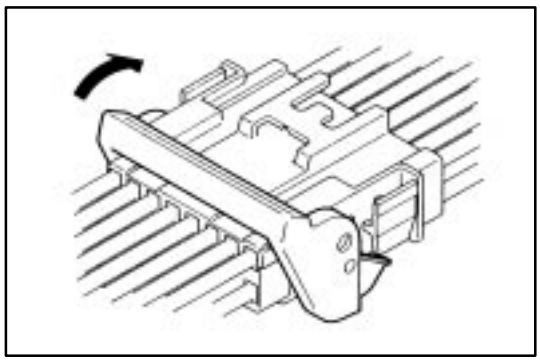

(3) Lift the lever up fully.

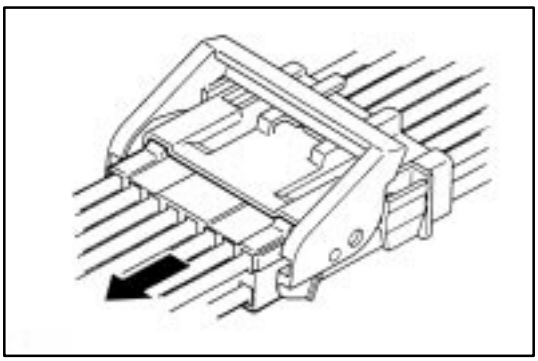

(4) Cut the connection of the connector.

NOTICE:
Do not hold the wire harness to pull it.

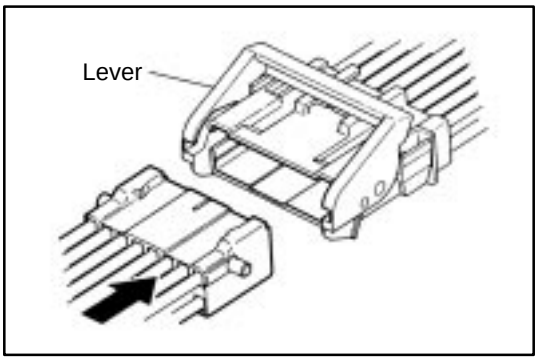

2. Connect the connector

(1) Connect the connector in the condition that the lever is fully lifted up.

HINT: If the lever is locked at the lower position, follow the procedure [Case 3]. (1) to (3) and lift the lever up fully.

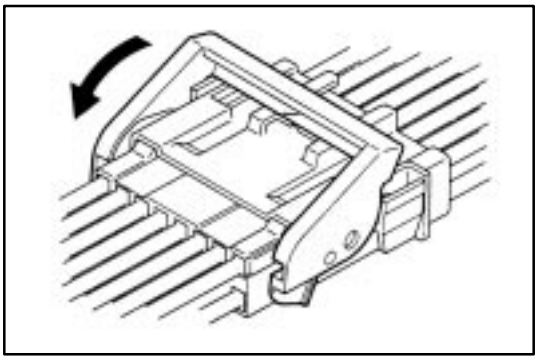

(2) Hold the connector to prevent it from slip off and push it down until you hear a click to lock it.

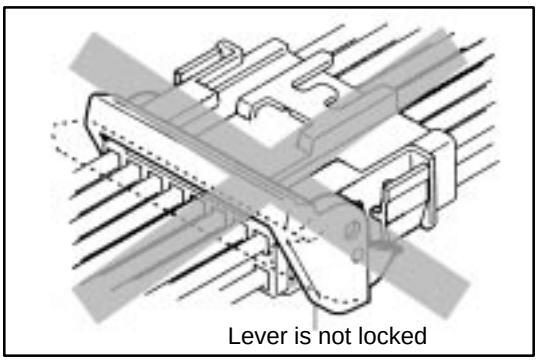

(3) Confirm that the lever is securely fitted

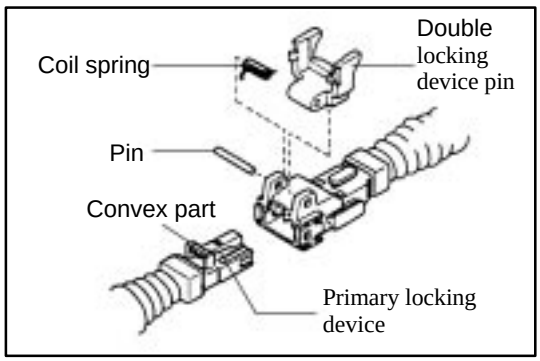

The connector with secondary locking device

1. Area used

- Wire harness for SRS airbag deployment

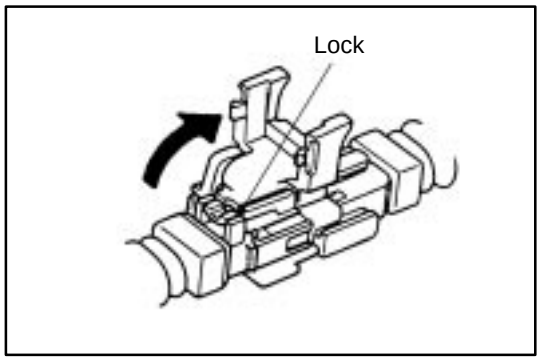

2. Cut the connection of the connector.

(1) Release the double locking.

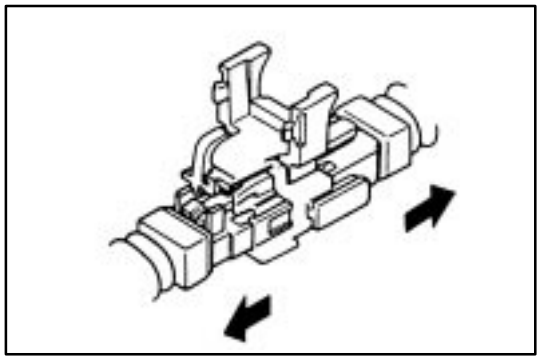

(2) Release the primary locking and separate the connector.

NOTICE:
Do not hold the wire harness to pull it.

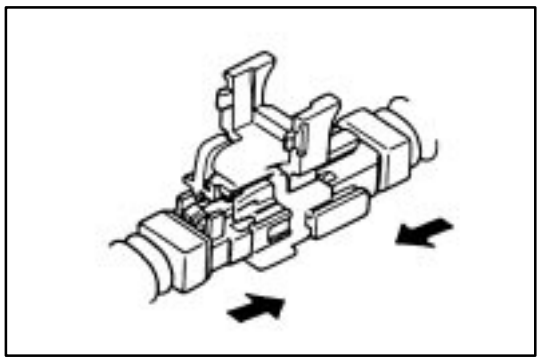

3. Connect the connector

(1) Install the primary locking device and connect the connector.

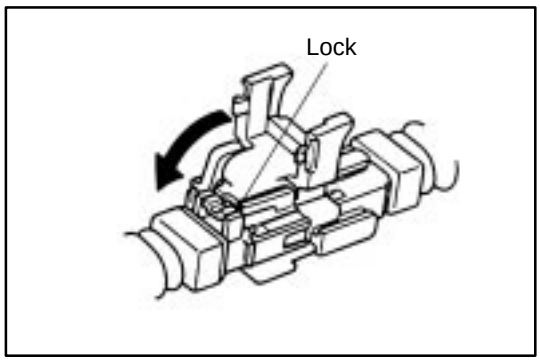

(2) Install the double locking device.

NOTICE:
The double locking device can not be installed unless the primary locking device is installed.

Connector fixed by bolts

1. Area used

- Engine control computer harness

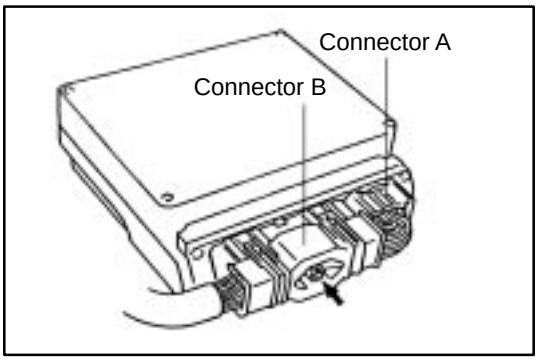

2. Cut the connection of the connector.

(1) Remove the connector A.

(2) Loose the bolt using a tool like driver until the connector B can be removed by hand and separate the connector.

HINT: If the bolt can not be removed, roll it while pulling forward.

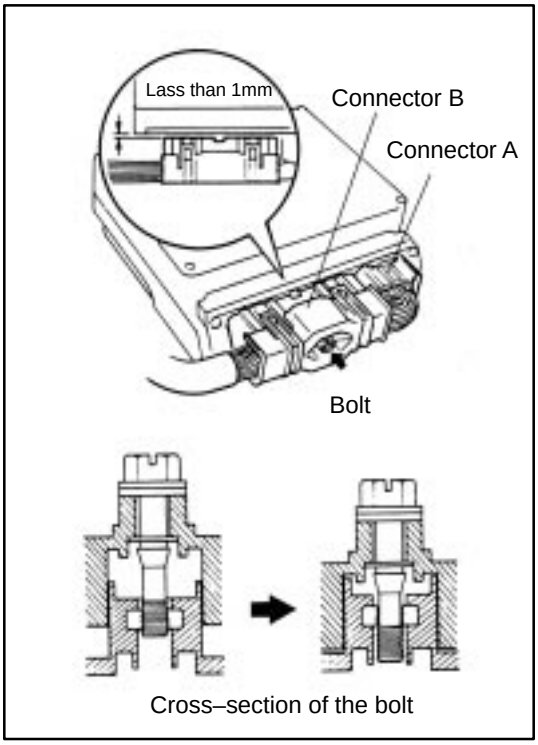

3. Connection of the connector

(1) Temporarily fit the connector B.

(2) Tighten the bolt by using tool like driver and fit the connector B completely.

NOTICE:

- **Tighten the bolt until feeling it lighter. Then confirm that the width of chink of the connector B is less than 1mm.**
- **The bolt can be rolled after it is fitted.**
- **If the impact wrench is used, do not let it rolling more than three seconds. (The housing may be deformed by generated heat)**
- **Be sure and connect the connector B straight. Do not incline it while connecting.**

(3) Connect the connector A.

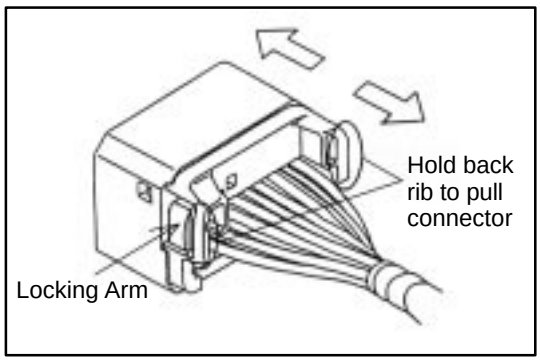

1. Cut the connection of the connector

(1) Push down on locking arm to unlock. Then hold the back ribs of connector to remove connector.

(2) Cut the Connection of the connector.

NOTICE:
Do not hold the wire harness to pull it.

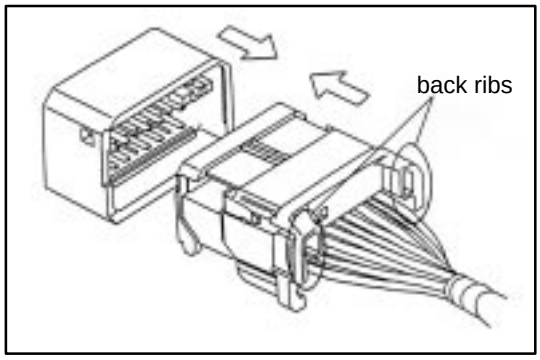

2. Connect the Connector

(1) Align the direction of locking feature in same direction and mate the connector holding the back ribs in straight direction.

(2) Insert it until a lock securely locks, and pull the connector lightly after the insertion, and confirm that a lock is enabled.

TABLE OF HOUSING CROSS SECTION

Type	○ : Position of the lance ↑ : Direction of lock released ⬆ : Direction of the special tool inserted	
	Male	Female
0.64		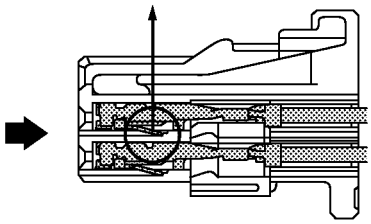 (Double Lock Type) [Terminal Lance]
0.64 IDC		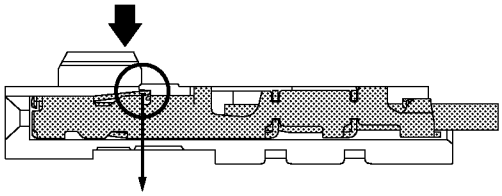 [Terminal Lance]
1.0		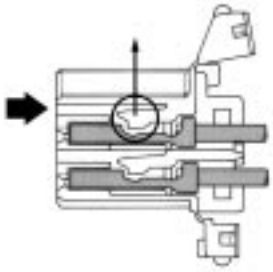 (Double Lock Type) [Housing Lance]
1.0II Non–waterproof Type	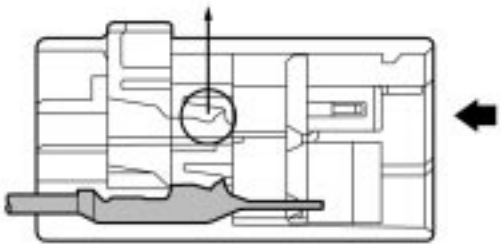 (Double Lock Type) [Housing Lance]	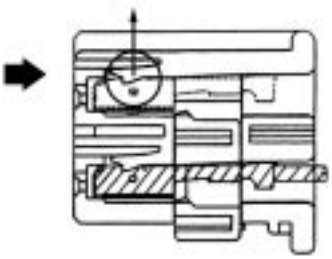 (Double Lock Type) [Housing Lance]

TABLE OF HOUSING CROSS SECTION

Type	○ : Position of the lance ↑ : Direction of lock released ⬆ : Direction of the special tool inserted	
	Male	Female
1.0II Waterproof Type		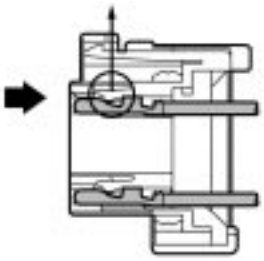 [Housing Lance]
1.0III 1.0IV Non–waterproof Type	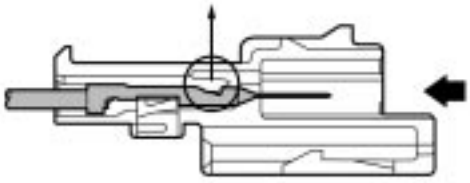 (Double Lock Type) [Housing Lance]	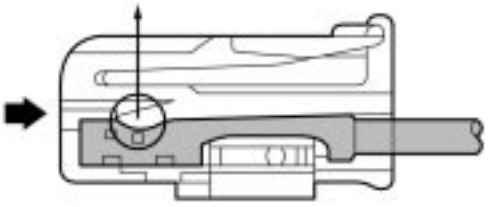 (Double Lock Type) [Housing Lance]
1.0III IDC	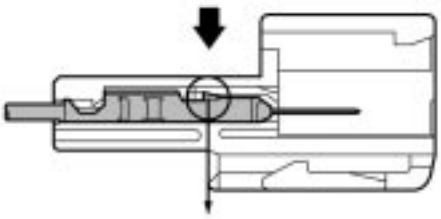 [Terminal Lance]	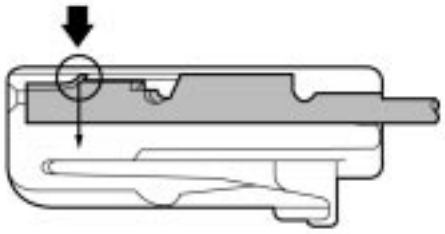 [Terminal Lance]
1.0III Waterproof Type	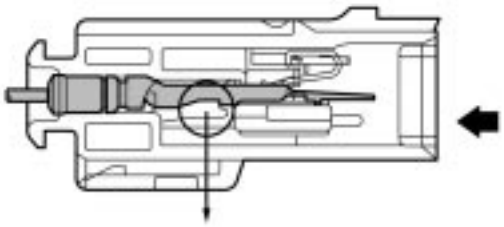 (Double Lock Type) [Housing Lance]	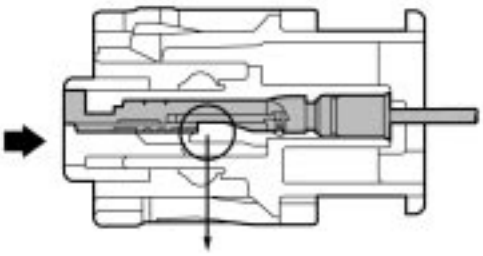 (Double Lock Type) [Housing Lance]

C

TABLE OF HOUSING CROSS SECTION

Type	○ : Position of the lance ↑ : Direction of lock released ↑ : Direction of the special tool inserted	
	Male	Female
1.3 Non–waterproof Type	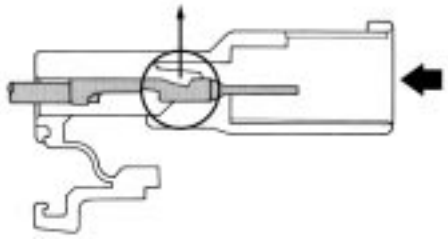 (Double Lock Type) [Housing Lance]	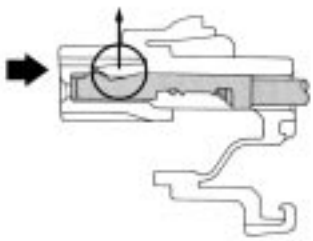 (Double Lock Type) [Housing Lance]
1.3 Non–waterproof Type	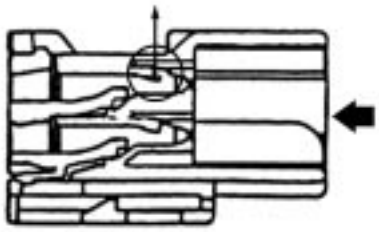 (Double Lock Type) [Housing Lance]	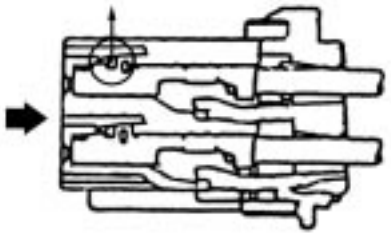 (Double Lock Type) [Housing Lance]
1.3 Non–waterproof Type	— 	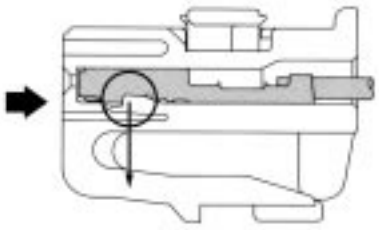 (Double Lock Type) [Housing Lance]
1.3 Waterproof Type	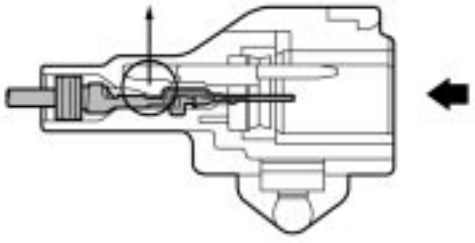 (Double Lock Type) [Housing Lance]	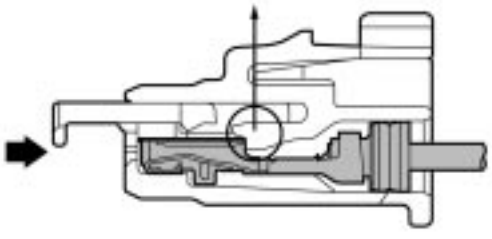 (Double Lock Type) [Housing Lance]

C

TABLE OF HOUSING CROSS SECTION

Type	○ : Position of the lance ↑ : Direction of lock released ↑ : Direction of the special tool inserted	
	Male	Female
1.8 Non–waterproof Type	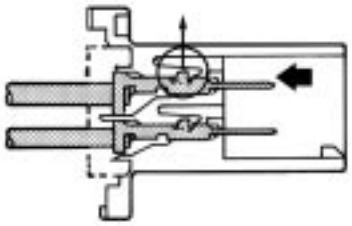 (Double Lock Type) [Housing Lance]	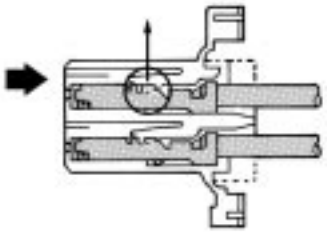 (Double Lock Type) [Housing Lance]
1.8 Waterproof Type	—	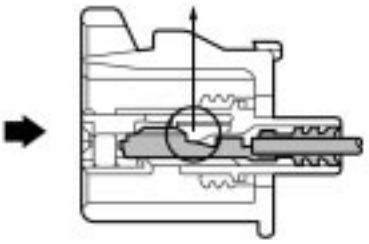 (Double Lock Type) [Housing Lance]
1.8II	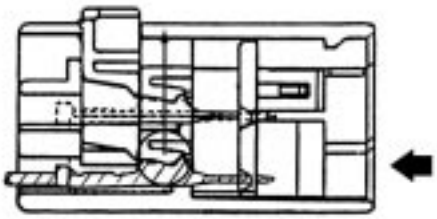 (Double Lock Type) [Housing Lance]	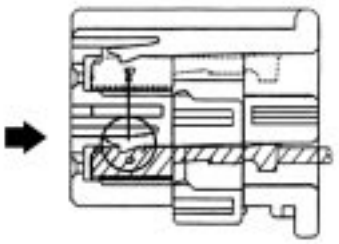 (Double Lock Type) [Housing Lance]
2.3 Non–waterproof Type	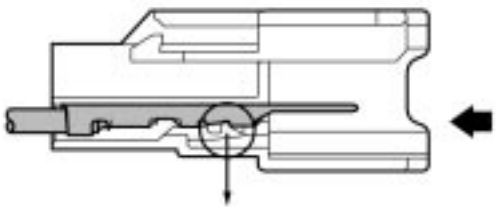 [Housing Lance]	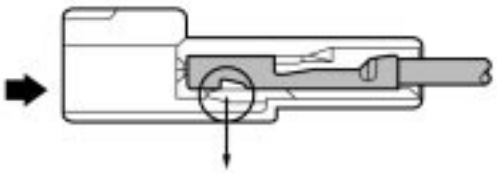 [Housing Lance]

C

TABLE OF HOUSING CROSS SECTION

Type	○ : Position of the lance ↑ : Direction of lock released ↑ : Direction of the special tool inserted	
	Male	Female
2.3 Waterproof Type	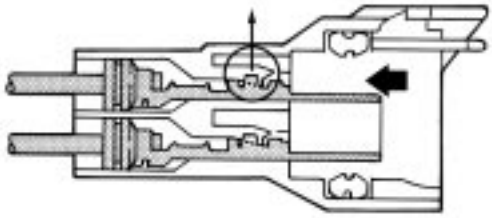 [Housing Lance]	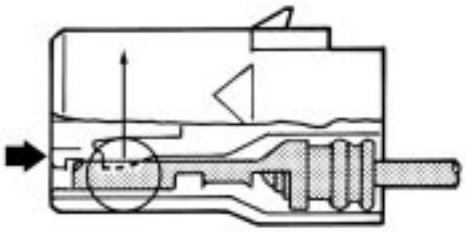 [Housing Lance]
2.3II Non–waterproof Type	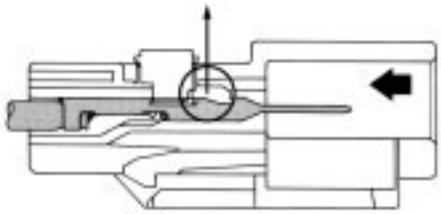 (Double Lock Type) [Housing Lance]	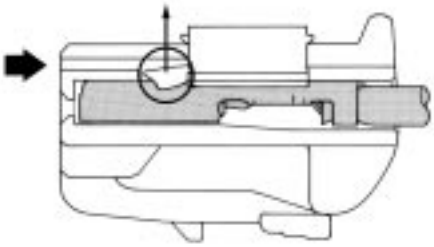 (Double Lock Type) [Housing Lance]
2.3II IDC		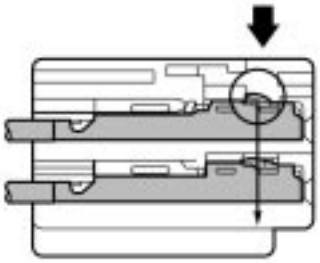 [Terminal Lance]
2.3II Waterproof Type	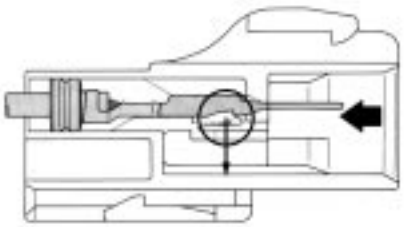 (Double Lock Type) [Housing Lance]	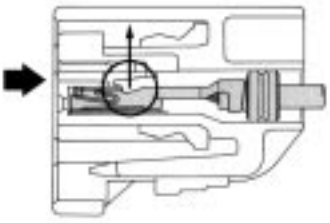 (Double Lock Type) [Housing Lance]

C

TABLE OF HOUSING CROSS SECTION

Type	○ : Position of the lance ↑ : Direction of lock released ⬆ : Direction of the special tool inserted	
	Male	Female
4.8 Non–waterproof Type	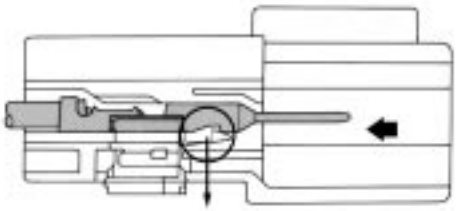 (Double Lock Type) [Housing Lance]	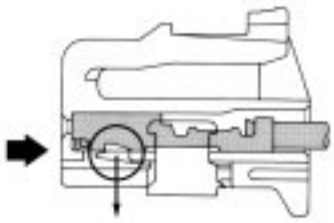 (Double Lock Type) [Housing Lance]
4.8 Waterproof Type	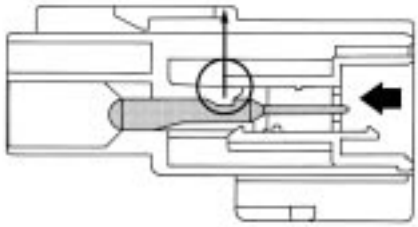 (Double Lock Type) [Housing Lance]	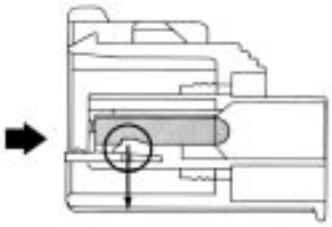 (Double Lock Type) [Housing Lance]
6.3 Non–waterproof Type	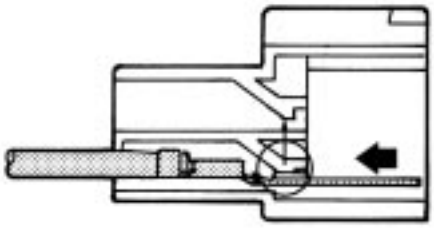 [Housing Lance]	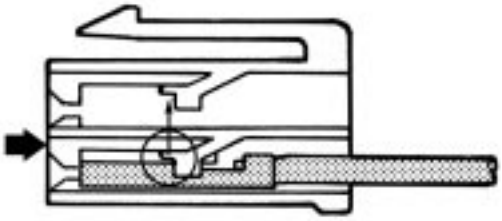 [Housing Lance]
6.3 Single Terminal		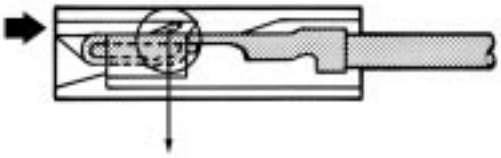 [Terminal Lance]

TABLE OF HOUSING CROSS SECTION

Type	○ : Position of the lance ↑ : Direction of lock released ↑ : Direction of the special tool inserted	
	Male	Female
8.0 Non–waterproof Type	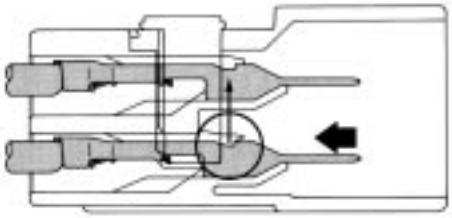 (Double Lock Type) [Housing Lance]	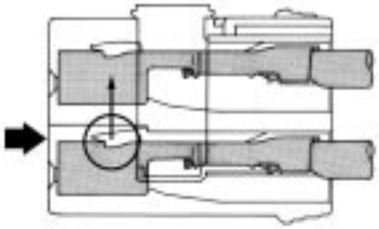 (Double Lock Type) [Housing Lance]
8.0 Waterproof Type	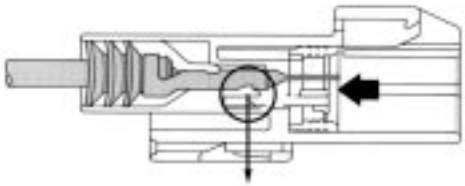 (Double Lock Type) [Housing Lance]	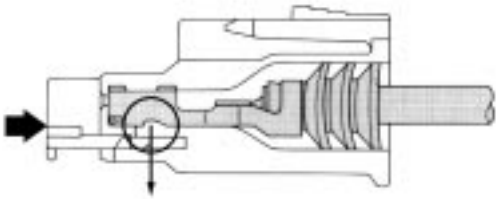 (Double Lock Type) [Housing Lance]
BLADE FUSE		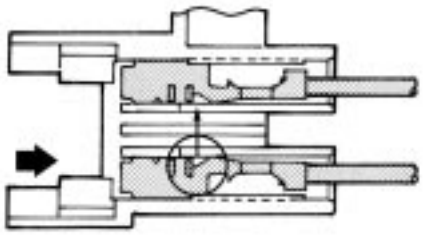 [Housing Lance]
C–Type	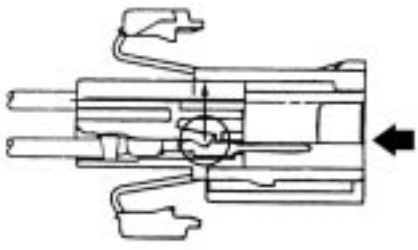 (Double Lock Type) [Housing Lance]	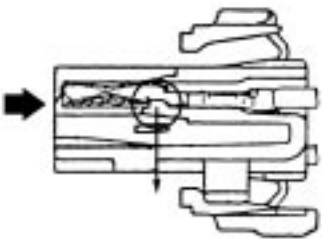 (Double Lock Type) [Housing Lance]

TABLE OF HOUSING CROSS SECTION

Type	○ : Position of the lance ↑ : Direction of lock released ⬆ : Direction of the special tool inserted	
	Male	Female
6.3 Waterproof Type		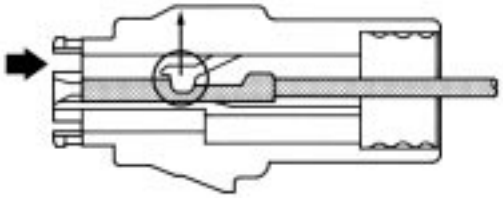 [Housing Lance]
6.3 Waterproof Type		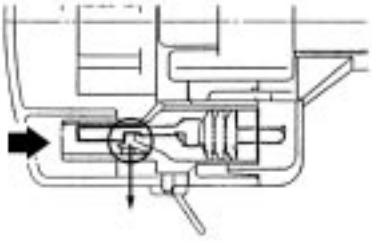 [Housing Lance]
7.7	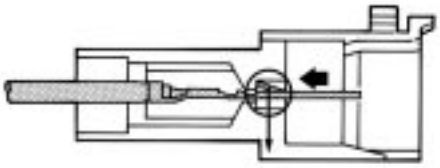 [Terminal Lance]	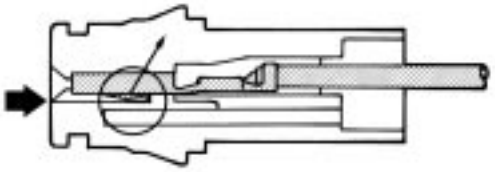 [Terminal Lance]
7.7	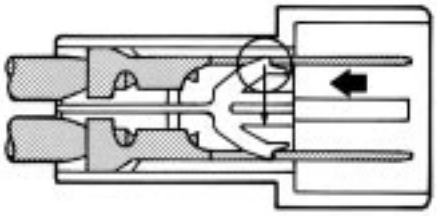 [Housing Lance]	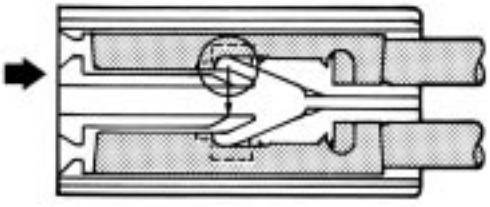 [Housing Lance]

C

TABLE OF HOUSING CROSS SECTION

Type	○ : Position of the lance ↑ : Direction of lock released ↑ : Direction of the special tool inserted	
	Male	Female
FOG–LP		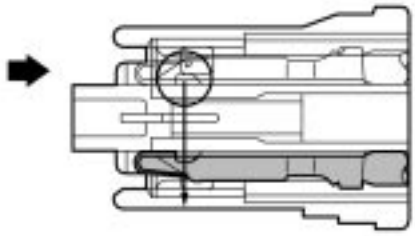 (Double Lock Type) [Housing Lance]
FTC		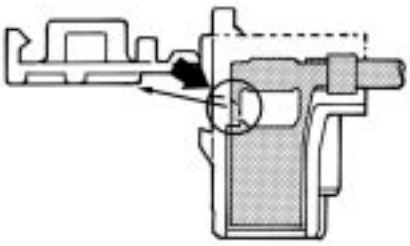 (Double Lock Type) [Housing Lance]
HEAD LAMP Waterproof Type		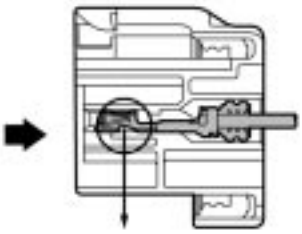 [Housing Lance]
HB3 HB4		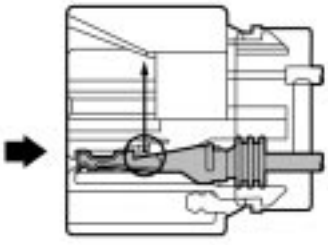 [Housing Lance]

TABLE OF HOUSING CROSS SECTION

Type	○ : Position of the lance ↑ : Direction of lock released ↑ : Direction of the special tool inserted	
	Male	Female
LAC	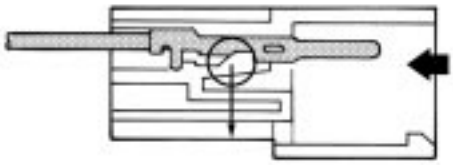 [Housing Lance]	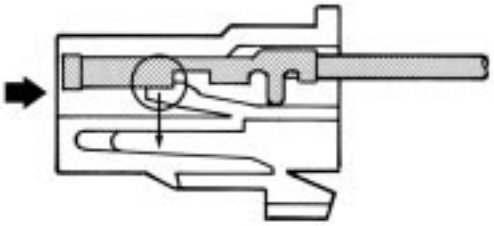 [Housing Lance]
MFPC	———	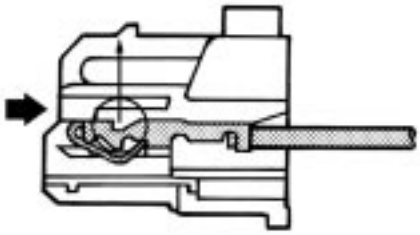 [Housing Lance]
MIC	———	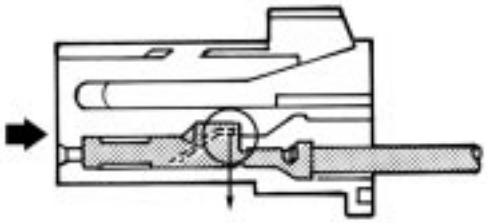 [Terminal Lance]
PULSE LOCK	———	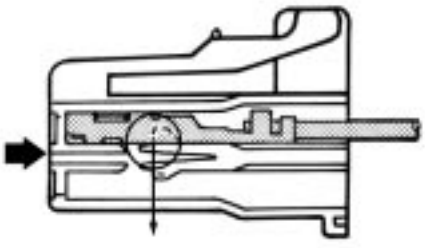 [Housing Lance]

TABLE OF HOUSING CROSS SECTION

Type	○ : Position of the lance ↑ : Direction of lock released ↑ : Direction of the special tool inserted	
	Male	Female
SFPC		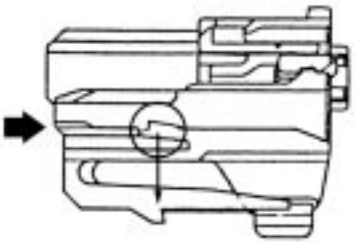 [Housing Lance]
SL		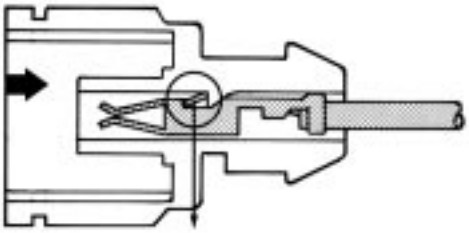 [Terminal Lance]
SP		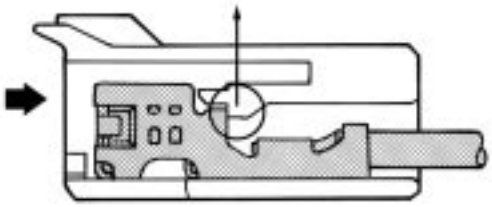 [Housing Lance]
TLC Non–waterproof Type	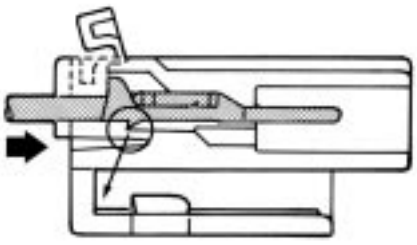 (Double Lock Type) [Housing Lance]	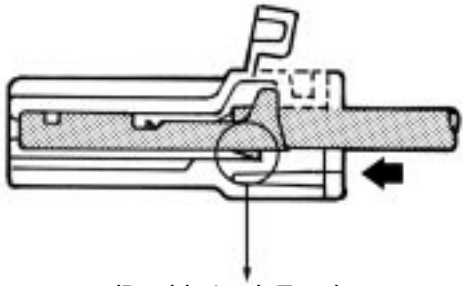 (Double Lock Type) [Housing Lance]

TABLE OF HOUSING CROSS SECTION

Type	○ : Position of the lance ↑ : Direction of lock released ⬆ : Direction of the special tool inserted	
	Male	Female
TLC Waterproof Type	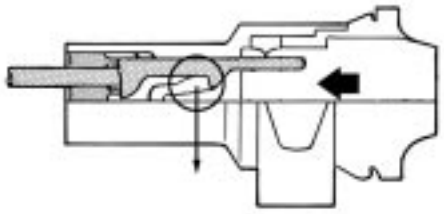 [Housing Lance]	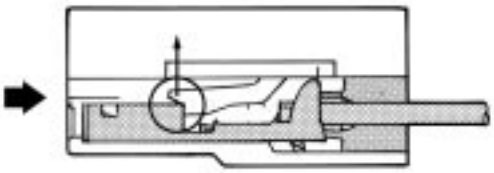 [Housing Lance]
TNS	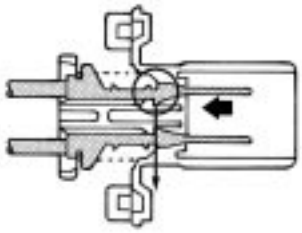 (Double Lock Type) [Housing Lance]	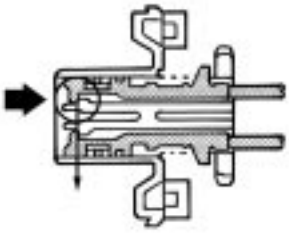 (Double Lock Type) [Housing Lance]
TODC	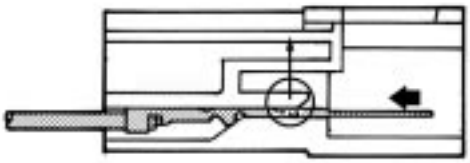 [Housing Lance]	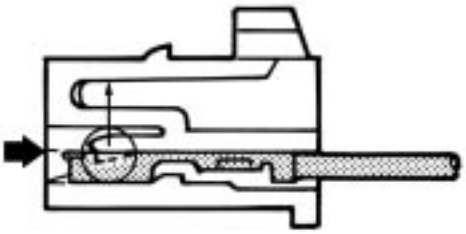 (Double Lock Type) [Housing Lance]

<FEMALE> 1P Waterproof Type

	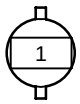		
90980–10090	90980–10115	90980–10197	90980–10201
			
90980–10241	90980–10247 90980–10705	90980–10439	90980–10837
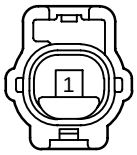		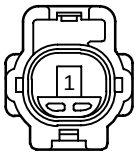	
90980–10893	90980–10983	90980–11007	90980–11166
			
90980–11184	90980–11243	90980–11252	90980–11271
			
90980–11282	90980–11363	90980–11400	90980–11428

<FEMALE> 1P Waterproof Type

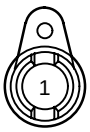 90980–11941	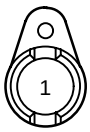 90980–11942	 90980–11943	 90980–11944
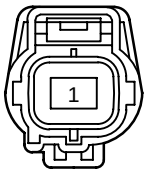 90980–11963	 90980–12125	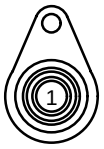 90980–12129 90980–12136	

<FEMALE> 2P Waterproof Type

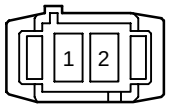	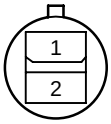	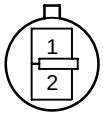	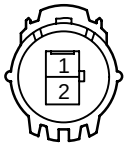
90980–10092	90980–10123	90980–10157	90980–10184
			
90980–10193	90980–10243	90980–10474	90980–10496
			
90980–10498 90980–10706	90980–10532	90980–10534	90980–10556
			
90980–10567	90980–10572	90980–10576	90980–10578
			
90980–10581	90980–10583	90980–10593	90980–10595

<FEMALE> 2P Waterproof Type

			
90980–10598	90980–10609	90980–10617	90980–10622
			
90980–10623	90980–10626	90980–10702	90980–10720
			
90980–10734	90980–10735	90980–10736	90980–10737
	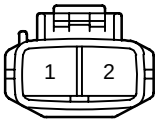	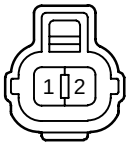	
90980–10748 90980–10846	90980–10839	90980–10843	90980–10847
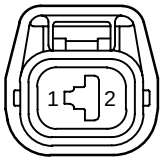			
90980–10853	90980–10887	90980–10899	90980–10901

D

<FEMALE> 2P Waterproof Type

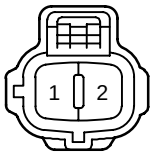	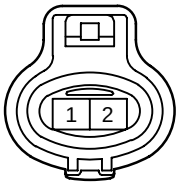		
90980–10923	90980–10928	90980–10947	90980–10949
		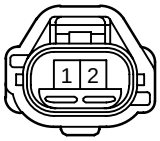	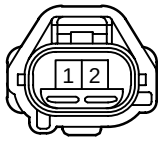
90980–10974	90980–11003	90980–11005	90980–11009
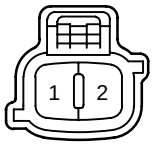	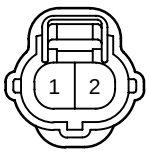	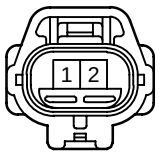	
90980–11019	90980–11025 90980–11401	90980–11030	90980–11032
	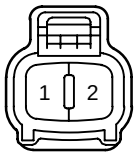		
90980–11038	90980–11051	90980–11061	90980–11062
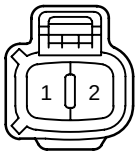			
90980–11068	90980–11070	90980–11075	90980–11095

<FEMALE> 2P Waterproof Type

	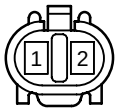	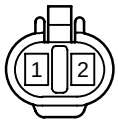	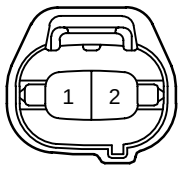
90980–11096	90980–11140	90980–11142	90980–11149
		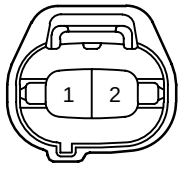	
90980–11153	90980–11154 90980–11284	90980–11156	90980–11162
			
90980–11163	90980–11176	90980–11189	90980–11207
		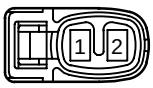	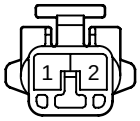
90980–11235	90980–11237	90980–11246	90980–11248
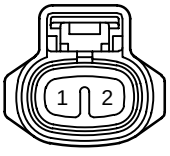		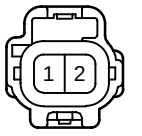	
90980–11250	90980–11255	90980–11273	90980–11285

<FEMALE> 2P Waterproof Type

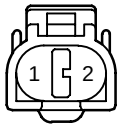			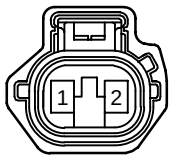
90980–11286	90980–11410	90980–11448	90980–11467
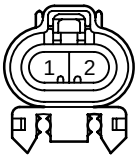	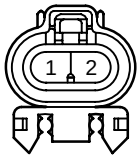		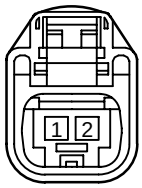
90980–11659	90980–11660	90980–11773	90980–11790
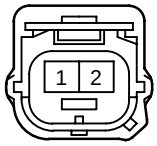			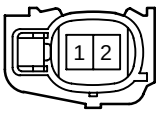
90980–11856	90980–11859	90980–11864	90980–11875
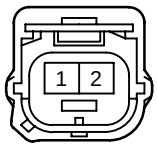		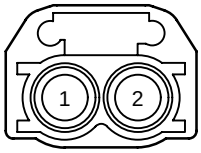	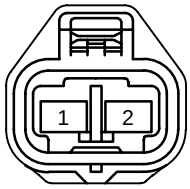
90980–11898	90980–11900	90980–12028	90980–12068
		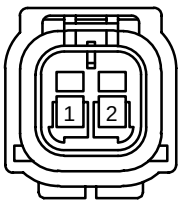	
90980–12117	90980–12188	90980–12195	

<FEMALE> 3P Waterproof Type

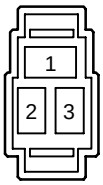 90980–10088	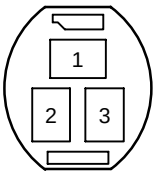 90980–10110	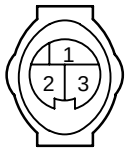 90980–10191	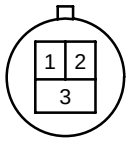 90980–10199
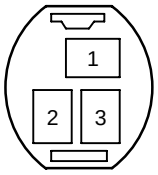 90980–10239	 90980–10245	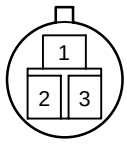 90980–10249	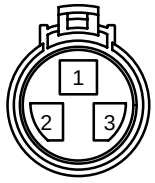 90980–10341 90980–11491
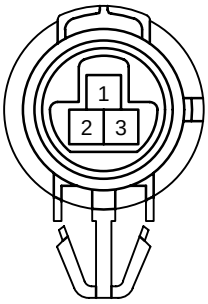 90980–10353	 90980–10395	 90980–10494	 90980–10501
 90980–10554	 90980–10574	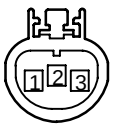 90980–10579	 90980–10629
 90980–10683	 90980–10690 90980–11157	 90980–10695	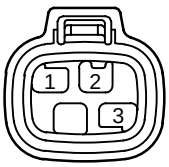 90980–10834

D

<FEMALE> 3P Waterproof Type

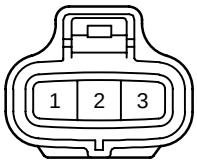	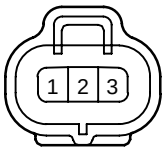		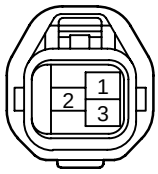
90980–10841	90980–10845	90980–10902	90980–10919
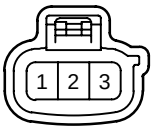	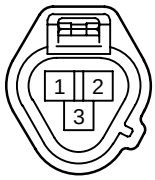	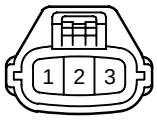	
90980–10981	90980–11016	90980–11020	90980–11045
			
90980–11108	90980–11132	90980–11143	90980–11145
		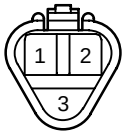	
90980–11161	90980–11170	90980–11245	90980–11261
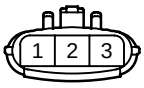	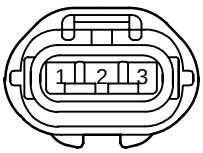	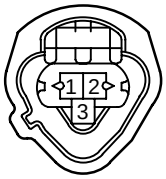	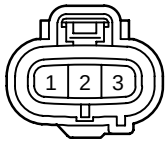
90980–11294	90980–11349	90980–11451	90980–11860

<FEMALE> 3P Waterproof Type

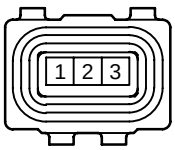 90980–11907	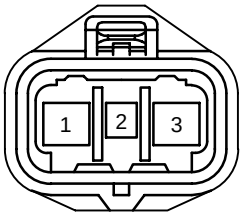 90980–12058	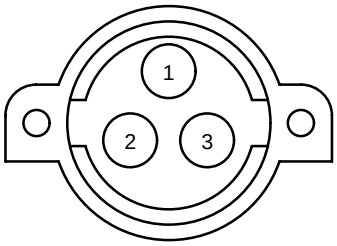 90980–12095	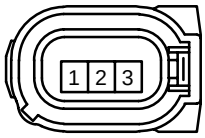 90980–12168
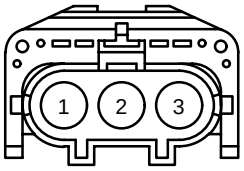 90980–12228			

<FEMALE> 4P Waterproof Type

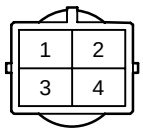	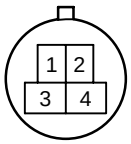	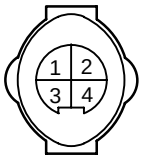	
90980–10095	90980–10140 90980–10220	90980–10203	90980–10218
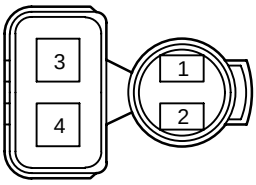		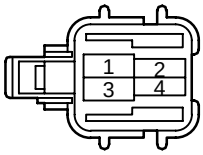	
90980–10373	90980–10476	90980–10549	90980–10551
		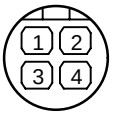	
90980–10591	90980–10649	90980–10663 90980–10664	90980–10685
	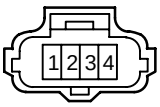	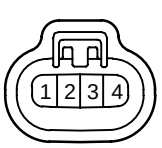	
90980–10701	90980–10711	90980–10831	90980–10844
	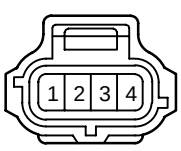	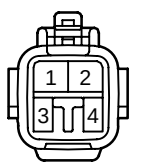	
90980–10869	90980–10929	90980–10940	90980–10942

<FEMALE> 4P Waterproof Type

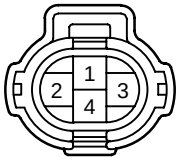		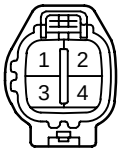	
90980–10943	90980–10990	90980–11028	90980–11036
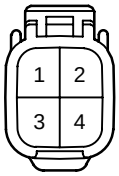	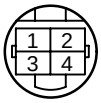		
90980–11037	90980–11065 90980–11066	90980–11139	90980–11150
	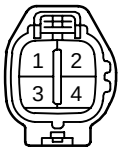		
90980–11152	90980–11178	90980–11269	90980–11283
			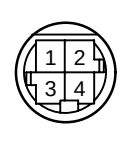
90980–11288	90980–11292	90980–11304	90980–11329 90980–11330
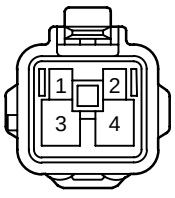	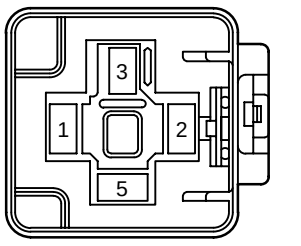	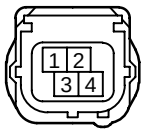	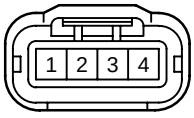
90980–11569	90980–11640	90980–11857	90980–11885

<FEMALE> 4P Waterproof Type

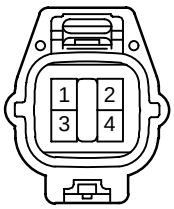			
90980–11930	90980–11964	90980–12005	90980–12057

<FEMALE> 5P Waterproof Type

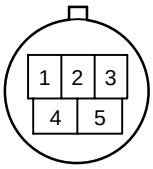	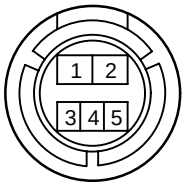		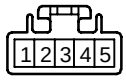
90980–10162	90980–10393	90980–10550	90980–10558
	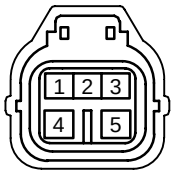	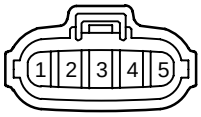	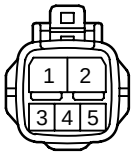
90980–10624	90980–10710	90980–10712	90980–10946
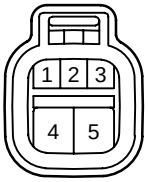	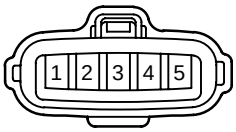	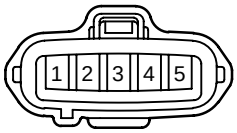	
90980–11022	90980–11024	90980–11049	90980–11077
	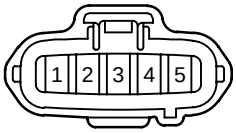	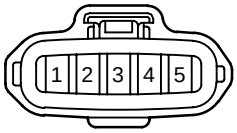	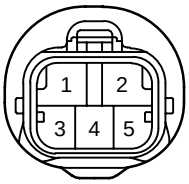
90980–11182	90980–11232	90980–11317	90980–11413
	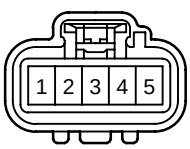		
90980–11599	90980–11904	90980–11960	

<FEMALE> 6P Waterproof Type

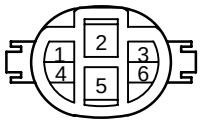		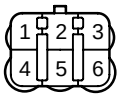	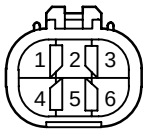
90980–10097	90980–10195	90980–10478	90980–10597
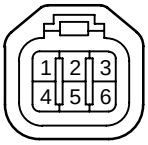	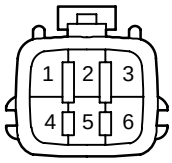	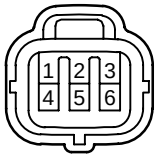	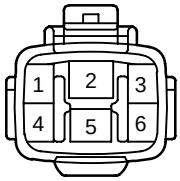
90980–10643	90980–10651	90980–10854	90980–10939
			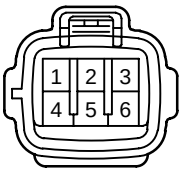
90980–10988	90980–11034	90980–11144	90980–11194
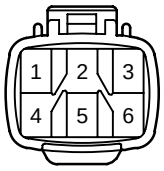	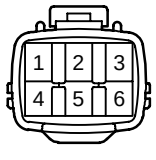	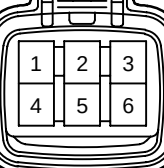	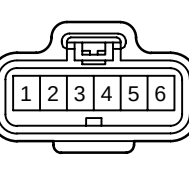
90980–11197	90980–11290	90980–11663	90980–11858

<FEMALE> 7P, 8P Waterproof Type

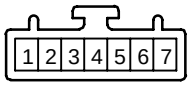	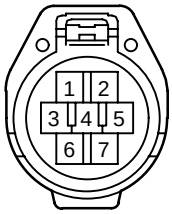		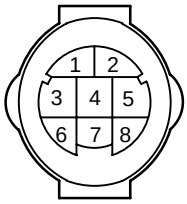
90980–10628	90980–10931	90980–11172	90980–10205
	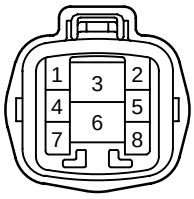	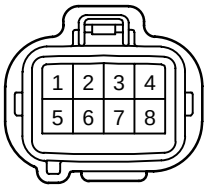	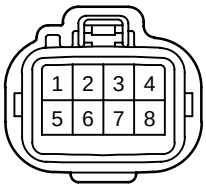
90980–10891	90980–10895	90980–10897	90980–11190
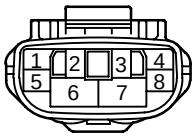	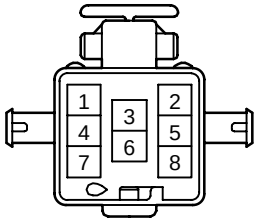	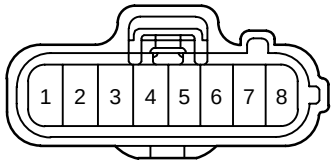	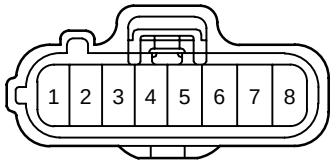
90980–11242	90980–11461	90980–11592	90980–11593
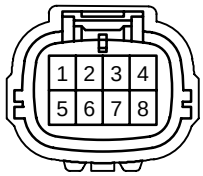	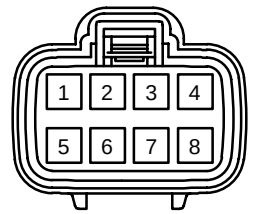		
90980–12080	90980–12164		

<FEMALE> 9P Waterproof Type

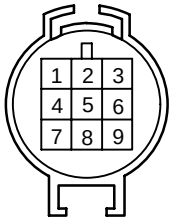 90980–10380 90980–10381	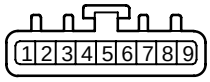 90980–10678	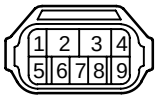 90980–10686
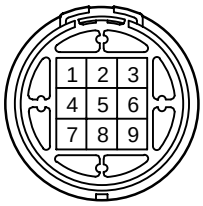 90980–10776	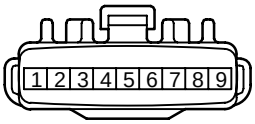 90980–11192	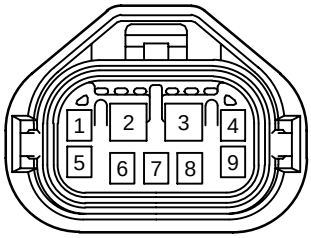 90980–11643
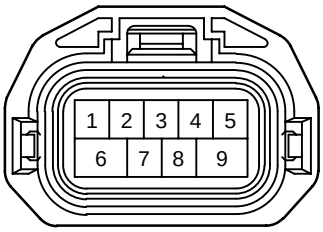 90980–11784		

<FEMALE> 10P Waterproof Type

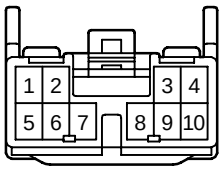

90980–11231

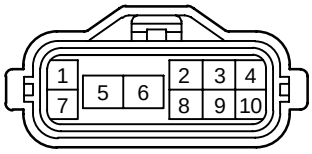

90980–11332

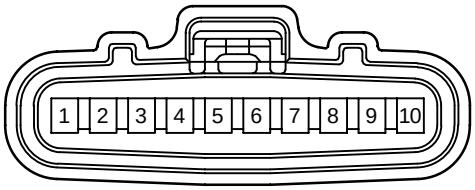

90980–11653

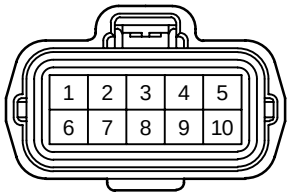

90980–11658

<FEMALE> 11P Waterproof Type

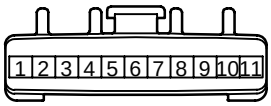 90980–11174	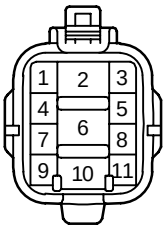 90980–11240
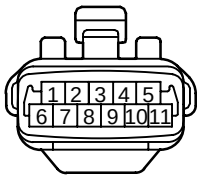 90980–11257	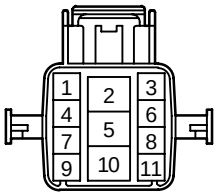 90980–11612

<FEMALE> 12P Waterproof Type

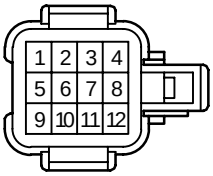

90980–10548

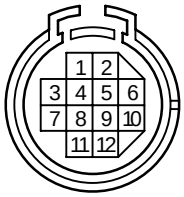

90980–10569



90980–11087

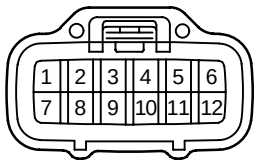

90980–11151

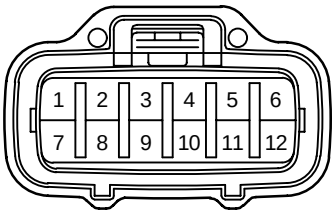

90980–11664

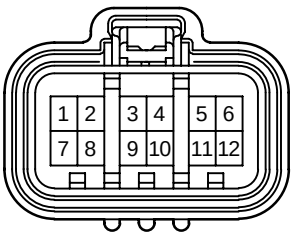

90980–11698

<FEMALE> 13P, 15P Waterproof Type

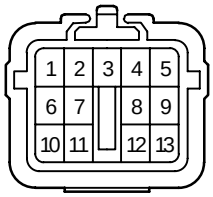

90980–10654

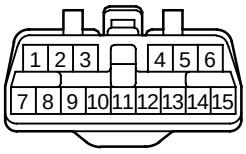

90980–11089

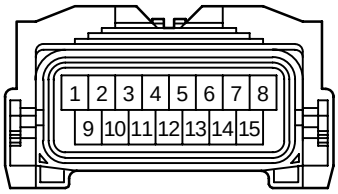

90980–11677

<FEMALE> 16P, 17P, 23P Waterproof Type

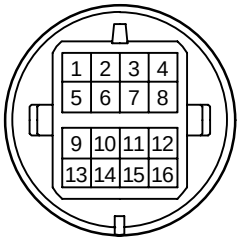

90980–10101

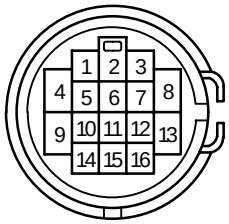

90980–10288

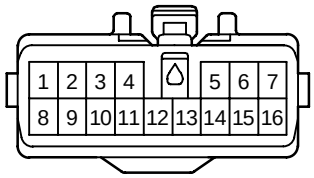

90980–11463

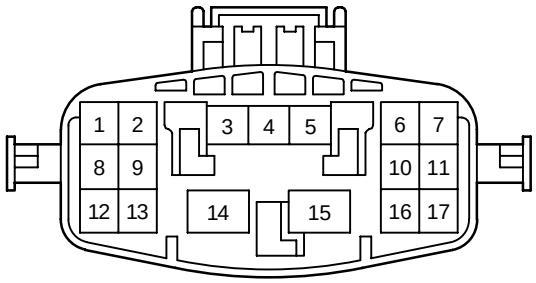

90980–11601

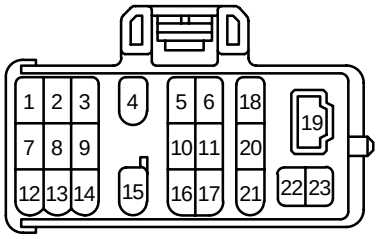

90980–11195

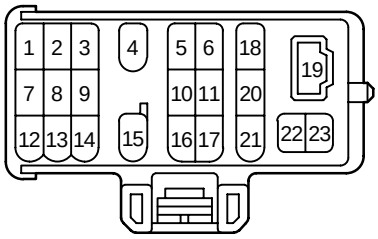

90980–11323

<FEMALE> 24P, 25P Waterproof Type

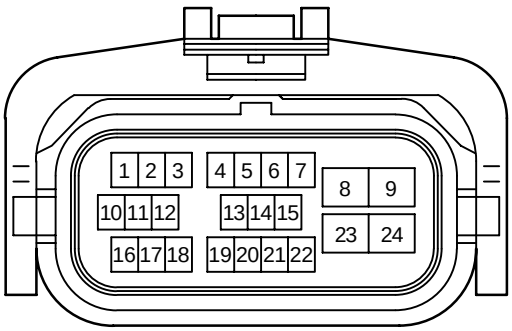

90980–11851

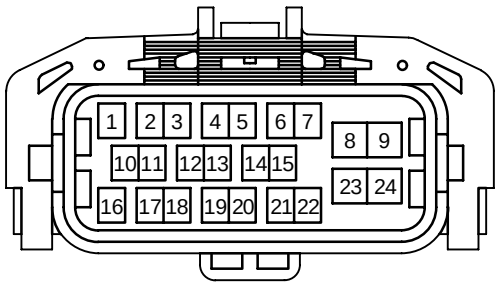

90980–11882

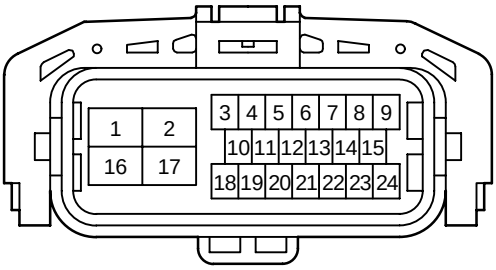

90980–11893

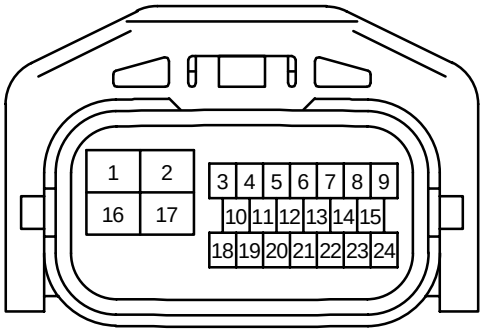

90980–12116

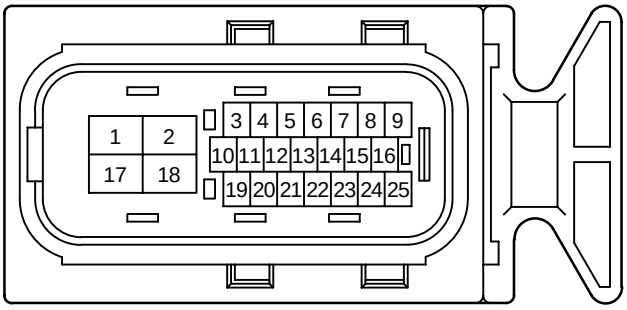

90980–11861

<FEMALE> 34P, 40P Waterproof Type

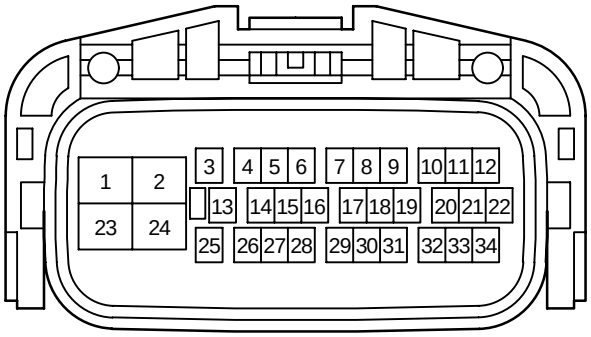

90980–12020

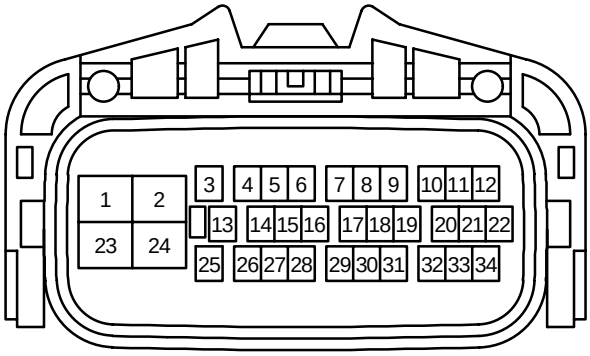

90980–12021
90980–12022

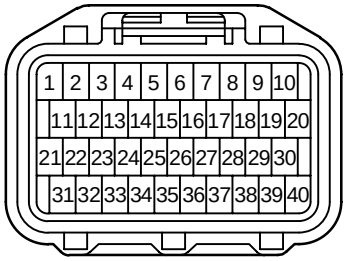

90980–11215

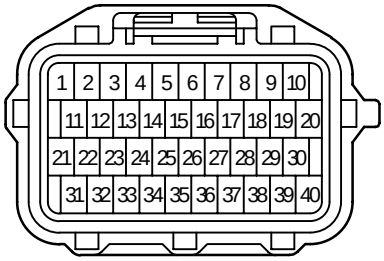

90980–11566

<FEMALE> 80P Waterproof Type

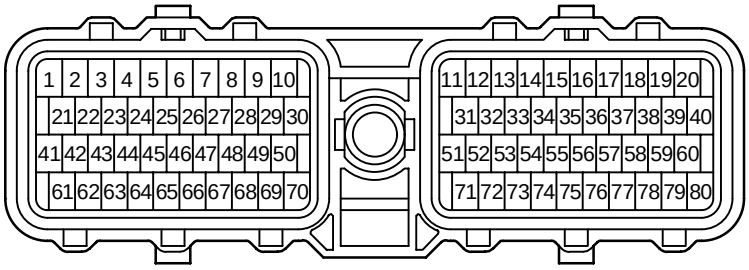

90980–11214

<FEMALE> 1P Non–waterproof Type

 90980–10165	 90980–10179	 90980–10183	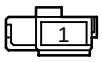 90980–10229
 90980–10250	 90980–10252	 90980–10254	 90980–10332
 90980–10343	 90980–10359	 90980–10363	 90980–10398
 90980–10435	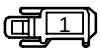 90980–10619	 90980–10652	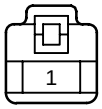 90980–10688
 90980–10703	 90980–10782	 90980–10786	 90980–10792

<FEMALE> 1P Non–waterproof Type

			
90980–10871	90980–10911	90980–10912	90980–10913
	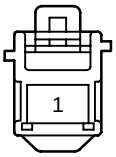		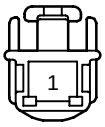
90980–10914	90980–10995	90980–11147	90980–11259
		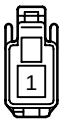	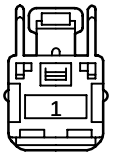
90980–11315	90980–11703	90980–11738	90980–11775
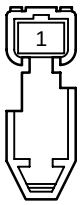	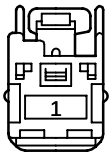		
90980–11853	90980–11881		

<FEMALE> 2P Non–waterproof Type

 90980–10012	 90980–10039	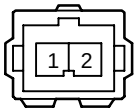 90980–10069	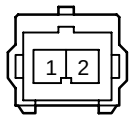 90980–10108
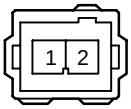 90980–10109	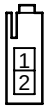 90980–10121	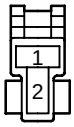 90980–10124	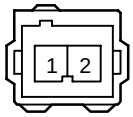 90980–10141
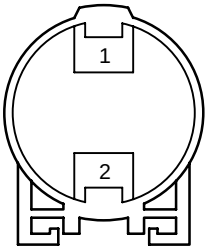 90980–10185	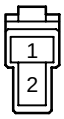 90980–10214	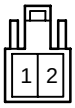 90980–10256	 90980–10298
 90980–10320	 90980–10333	 90980–10345	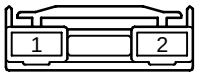 90980–10348
 90980–10355	 90980–10357	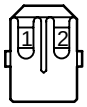 90980–10362	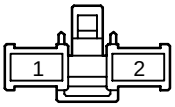 90980–10385

<FEMALE> 2P Non–waterproof Type

	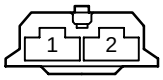	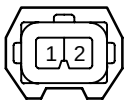	
90980–10423	90980–10425	90980–10426	90980–10465
			
90980–10481	90980–10482	90980–10491	90980–10511
			
90980–10512	90980–10559	90980–10621	90980–10637
			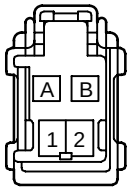
90980–10679	90980–10760	90980–10783	90980–10823
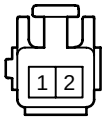	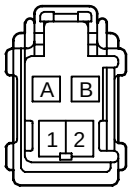	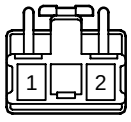	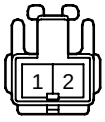
90980–10825	90980–10835	90980–10850	90980–10855

<FEMALE> 2P Non–waterproof Type

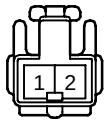	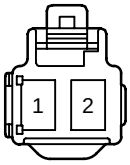	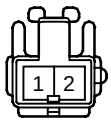	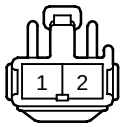
90980–10860	90980–10903	90980–10906	90980–10916
			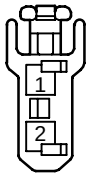
90980–10935	90980–10960	90980–10962	90980–11080
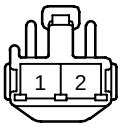	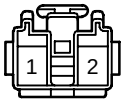		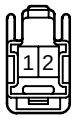
90980–11094	90980–11098	90980–11148	90980–11212
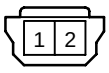			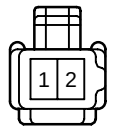
90980–11227	90980–11278	90980–11306	90980–11369
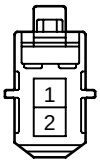			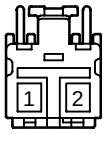
90980–11386	90980–11388	90980–11396	90980–11429

<FEMALE> 2P Non–waterproof Type

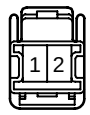	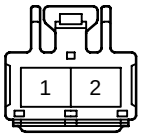		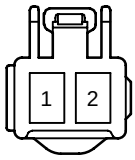
90980–11436	90980–11579	90980–11608	90980–11684
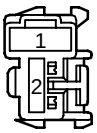	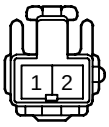	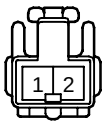	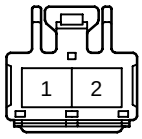
90980–11687	90980–11736	90980–11769	90980–11824
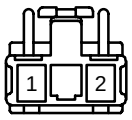		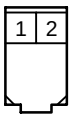	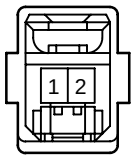
90980–11839	90980–11840	90980–11862	90980–11884
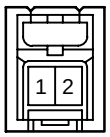	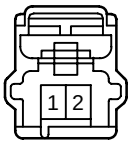	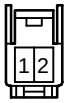	
90980–11886	90980–11890	90980–11918	90980–11919
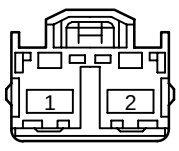	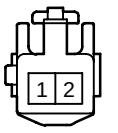	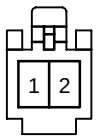	
90980–11996	90980–12014	90980–12039	90980–12063

<FEMALE> 2P Non–waterproof Type

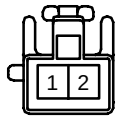 90980–12088	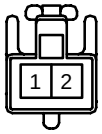 90980–12089	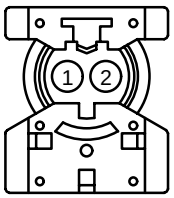 90980–12109	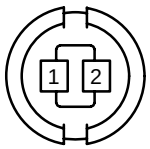 90980–12110
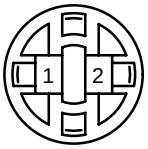 90980–12111	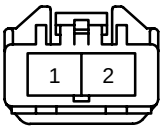 90980–12120	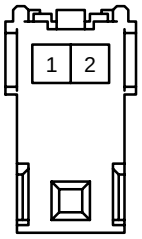 90980–12138	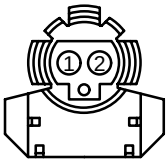 90980–12191
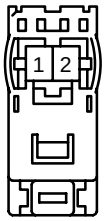 90980–12219 90980–12242	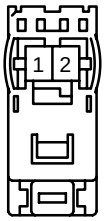 90980–12224 90980–12243	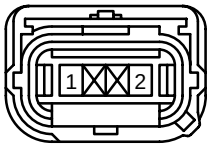 90980–12241	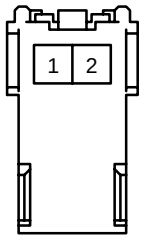 90980–12253

<FEMALE> 3P Non–waterproof Type

	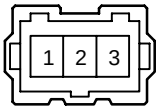	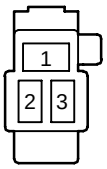	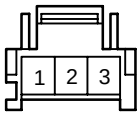
90980–10056	90980–10070	90980–10072	90980–10111
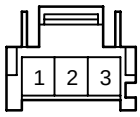	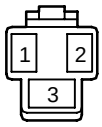	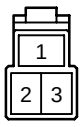	
90980–10143	90980–10189	90980–10216	90980–10222
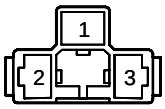		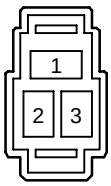	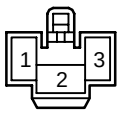
90980–10228	90980–10232	90980–10234	90980–10258
	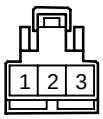	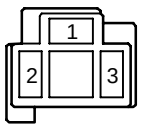	
90980–10365	90980–10420	90980–10428	90980–10464
	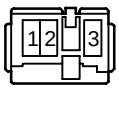	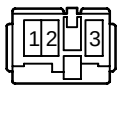	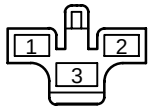
90980–10483	90980–10489	90980–10490	90980–10618

<FEMALE> 3P Non–waterproof Type

 90980–10638 90980–10660	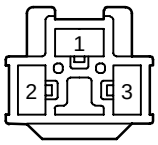 90980–10704	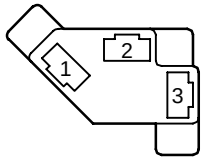 90980–10747	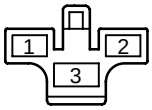 90980–10784
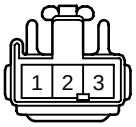 90980–10908	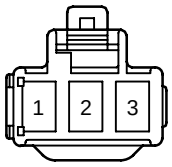 90980–10956	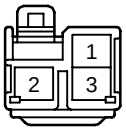 90980–10980	 90980–11053
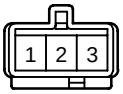 90980–11071	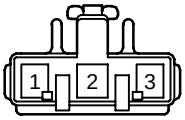 90980–11079	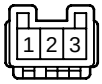 90980–11251	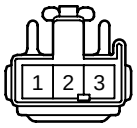 90980–11296
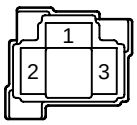 90980–11314	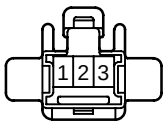 90980–11336	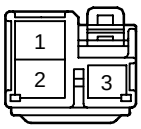 90980–11387	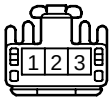 90980–11471
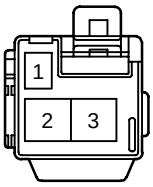 90980–11485	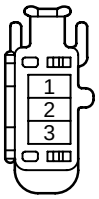 90980–11490	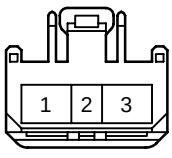 90980–11667	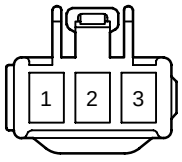 90980–11685

<FEMALE> 3P Non–waterproof Type

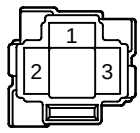	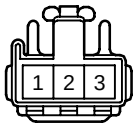	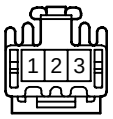	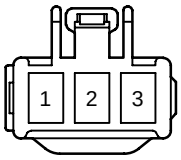
90980–11731	90980–11764	90980–11777	90980–11880
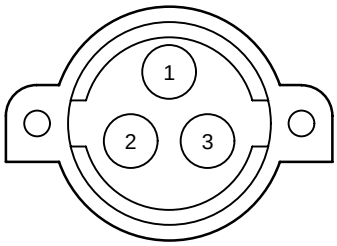		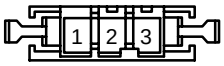	
90980–11938	90980–11987	90980–12197	

<FEMALE> 4P Non–waterproof Type

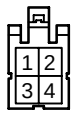		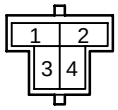	
90980–10002	90980–10127	90980–10142	90980–10171
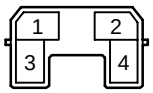	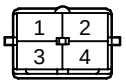	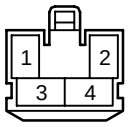	
90980–10196	90980–10221	90980–10260	90980–10307
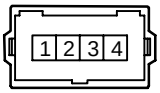	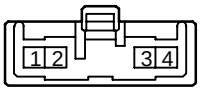		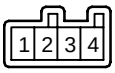
90980–10378	90980–10400	90980–10467	90980–10484
		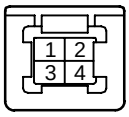	
90980–10504	90980–10514	90980–10515	90980–10601
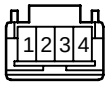	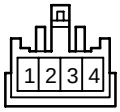		
90980–10645	90980–10692	90980–10716	90980–10717

<FEMALE> 4P Non–waterproof Type

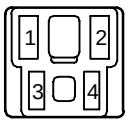 90980–10759	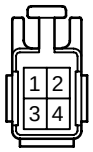 90980–10795	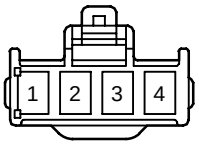 90980–10867	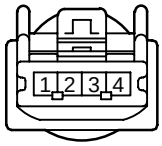 90980–10904
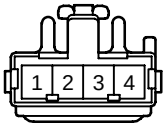 90980–11013	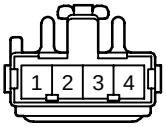 90980–11090	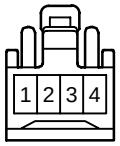 90980–11107	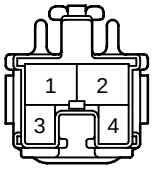 90980–11118
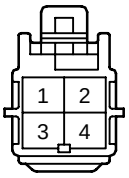 90980–11136	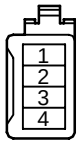 90980–11187	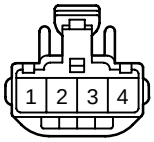 90980–11313	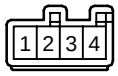 90980–11398
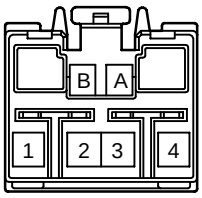 90980–11427	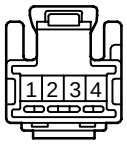 90980–11494	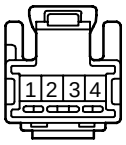 90980–11495	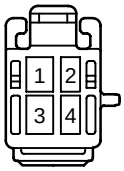 90980–11606
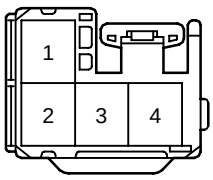 90980–11662	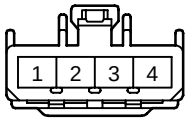 90980–11676	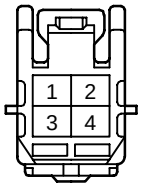 90980–11742	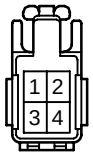 90980–11766

<FEMALE> 4P Non–waterproof Type

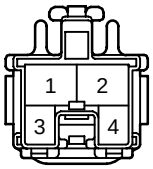 90980–11771	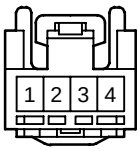 90980–11792	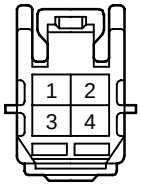 90980–11799	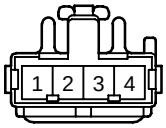 90980–11841
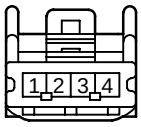 90980–11842	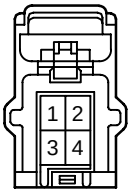 90980–11892	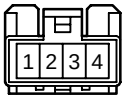 90980–11950	 90980–11988
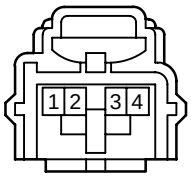 90980–12017	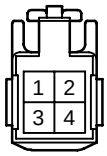 90980–12018	 90980–12019	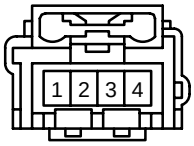 90980–12160
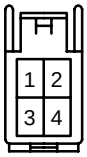 90980–12211	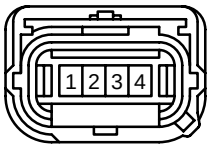 90980–12225		

<FEMALE> 5P Non–waterproof Type

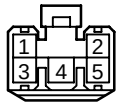	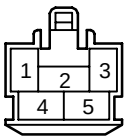	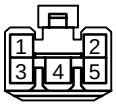	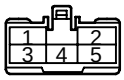
90980–10041	90980–10262	90980–10274	90980–10339
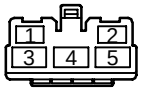	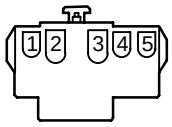	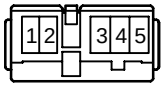	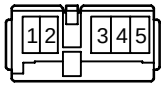
90980–10340	90980–10376	90980–10487	90980–10488
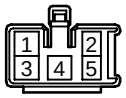	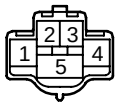	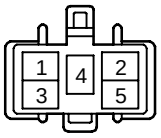	
90980–10509	90980–10520	90980–10610	90980–10631
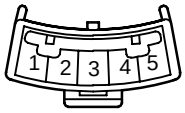	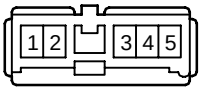	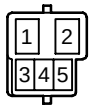	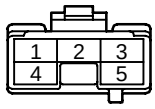
90980–10644	90980–10659	90980–10713	90980–10718
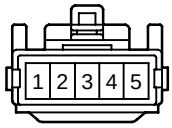	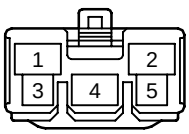	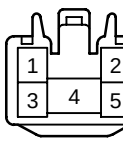	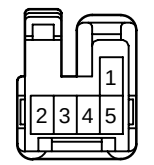
90980–10789	90980–10888	90980–10986	90980–11319

<FEMALE> 5P Non–waterproof Type

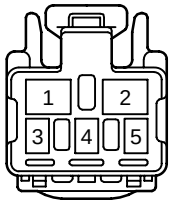 90980–11603	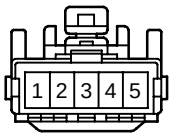 90980–11772	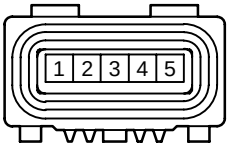 90980–11908	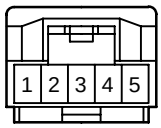 90980–11909
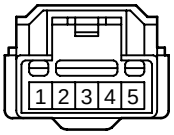 90980–11921	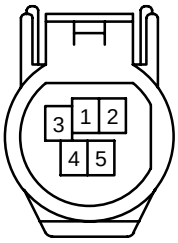 90980–12190		

<FEMALE> 6P Non–waterproof Type

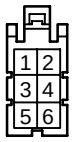	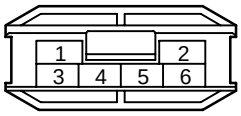	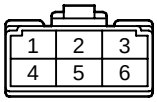	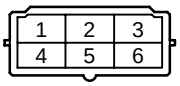
90980–10004	90980–10029	90980–10173	90980–10224
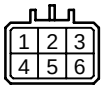	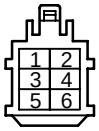	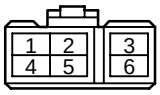	
90980–10313	90980–10334	90980–10335	90980–10367
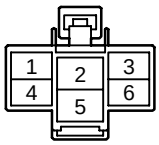	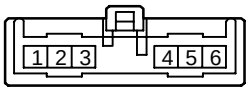	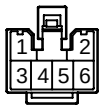	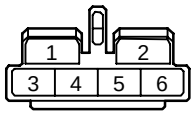
90980–10382	90980–10402	90980–10414	90980–10447
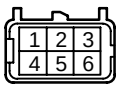			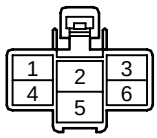
90980–10604	90980–10605	90980–10672	90980–10673
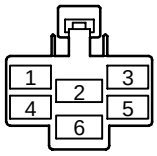	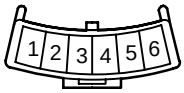	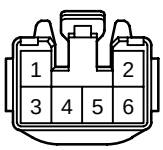	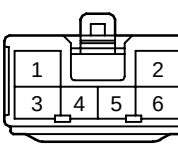
90980–10766	90980–10785	90980–10797	90980–10889

<FEMALE> 6P Non–waterproof Type

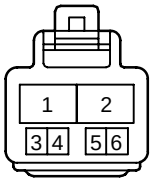	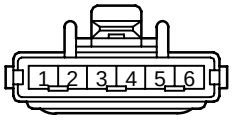	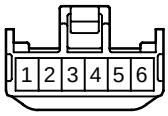	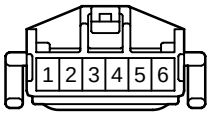
90980–10910	90980–10933	90980–10957	90980–10964
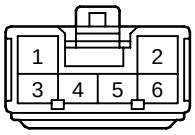	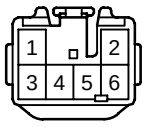	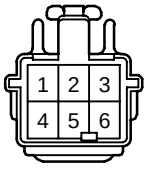	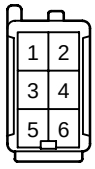
90980–10976	90980–10996	90980–11001	90980–11011
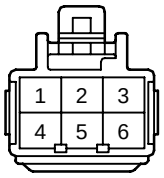	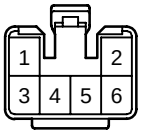	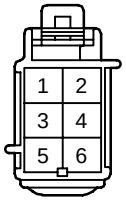	
90980–11091	90980–11280	90980–11297	90980–11326
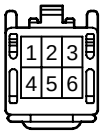	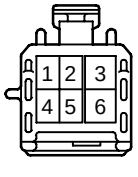		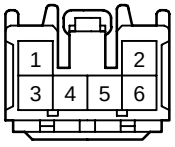
90980–11488	90980–11493	90980–11552	90980–11583
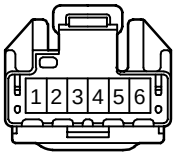	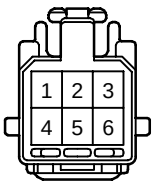	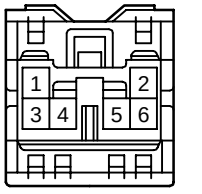	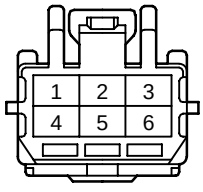
90980–11616	90980–11617	90980–11697	90980–11778

<FEMALE> 6P Non–waterproof Type

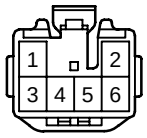	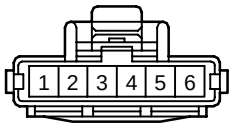	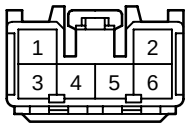	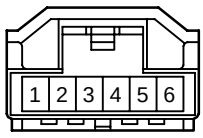
90980–11780	90980–11820	90980–11879	90980–11986
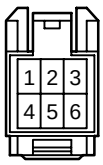	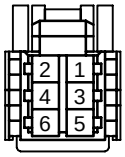	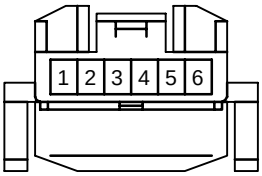	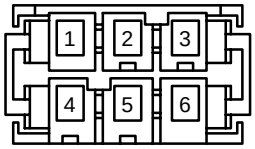
90980–12012	90980–12056	90980–12067	90980–12199
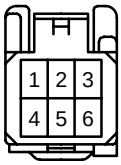			
90980–12209			

<FEMALE> 7P Non–waterproof Type

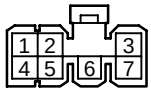 90980–10043	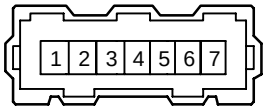 90980–10071	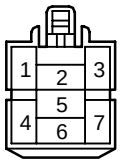 90980–10264	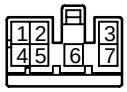 90980–10311
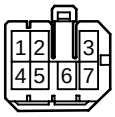 90980–10452	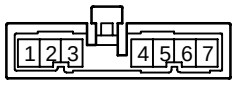 90980–10460	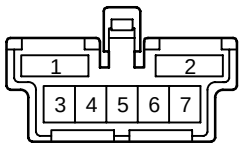 90980–10729 90980–10772	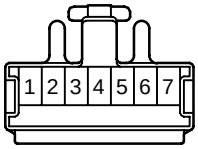 90980–11165
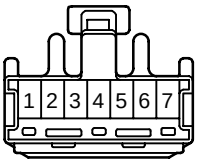 90980–11340	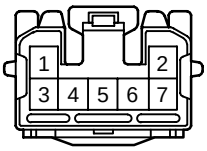 90980–11529	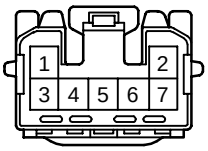 90980–11740	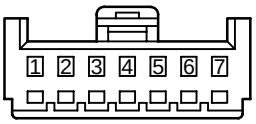 90980–11794
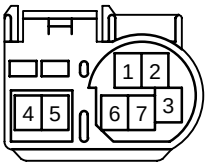 90980–12060			

<FEMALE> 8P Non–waterproof Type

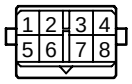	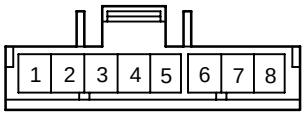	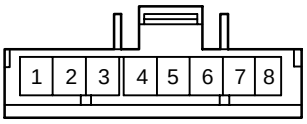	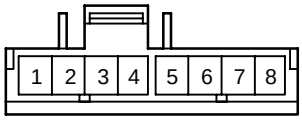
90980–10019	90980–10112	90980–10113	90980–10119
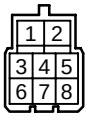	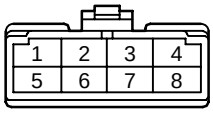	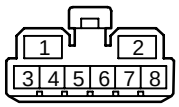	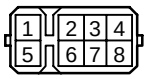
90980–10148	90980–10175	90980–10209	90980–10280
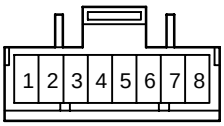	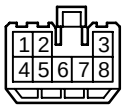	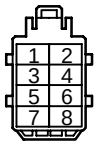	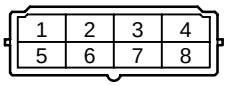
90980–10301	90980–10321	90980–10336	90980–10358
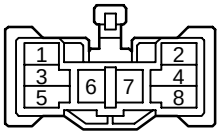	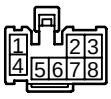	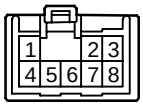	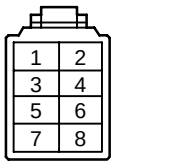
90980–10404	90980–10419	90980–10431	90980–10449
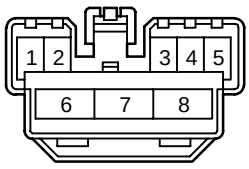	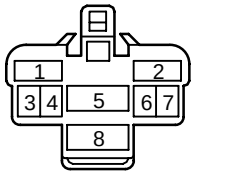	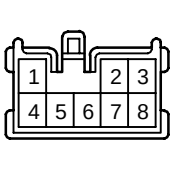	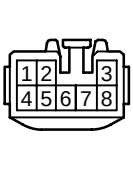
90980–10463	90980–10517	90980–10523	90980–10799

<FEMALE> 8P Non–waterproof Type

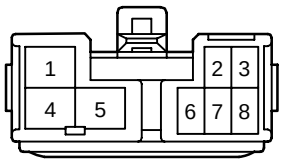 90980–10877 90980–11439	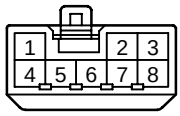 90980–10926	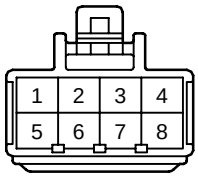 90980–11092	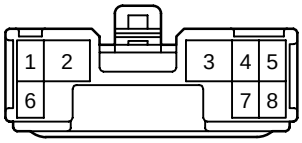 90980–11130
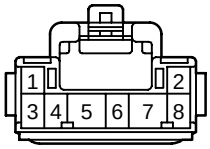 90980–11279	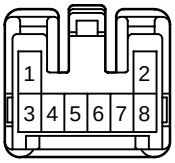 90980–11321	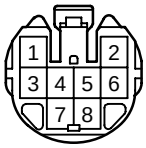 90980–11354	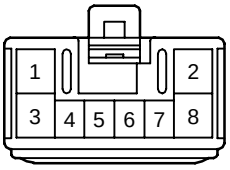 90980–11362
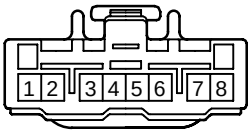 90980–11397	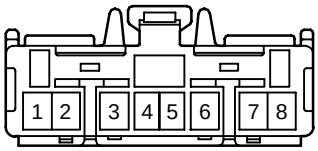 90980–11459	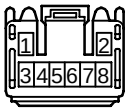 90980–11533	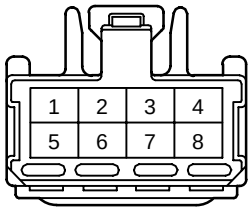 90980–11615
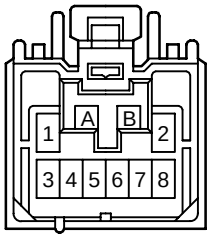 90980–11630	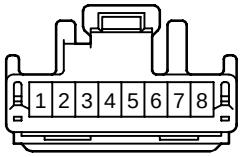 90980–11633	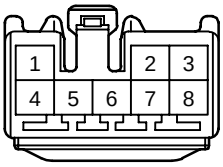 90980–11686	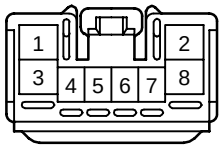 90980–11701
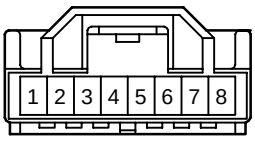 90980–11989	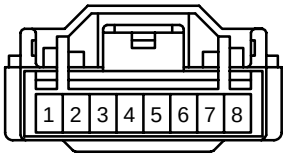 90980–12091	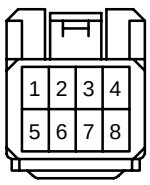 90980–12113	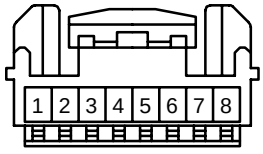 90980–12217

<FEMALE> 8P Non–waterproof Type

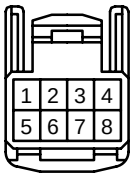 90980–12221			

<FEMALE> 9P Non–waterproof Type

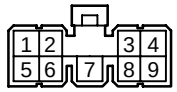 90980–10045	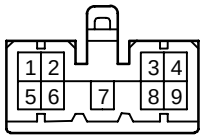 90980–10133	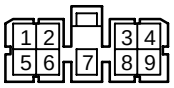 90980–10152	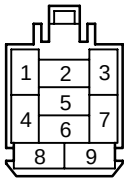 90980–10266
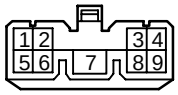 90980–10318	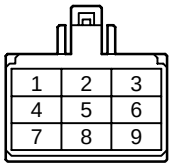 90980–10386	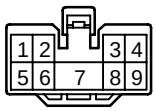 90980–10536	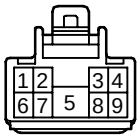 90980–11277
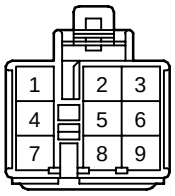 90980–11302	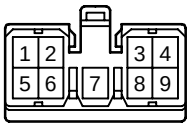 90980–11479	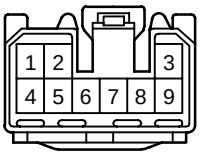 90980–11535	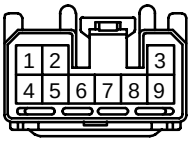 90980–11710
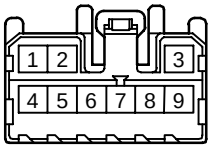 90980–12026			

<FEMALE> 10P Non–waterproof Type

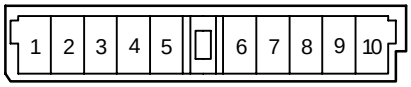 90980–10158	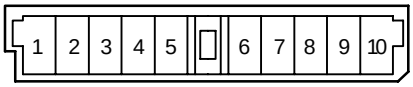 90980–10159	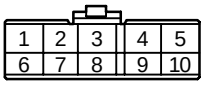 90980–10177
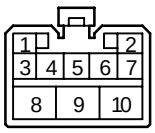 90980–10282	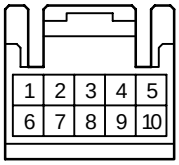 90980–10294	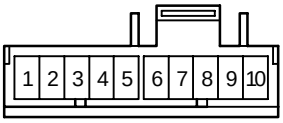 90980–10302
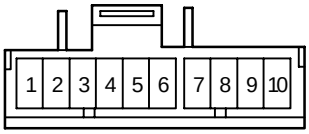 90980–10304	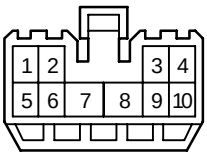 90980–10322	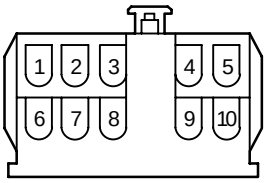 90980–10377
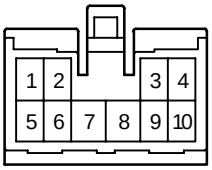 90980–10469	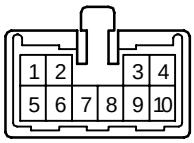 90980–10528	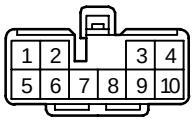 90980–10669

<FEMALE> 10P Non–waterproof Type

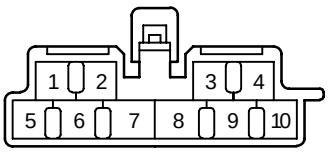	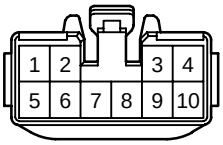	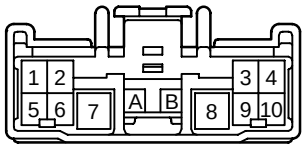
90980–10721	90980–10801	90980–10822
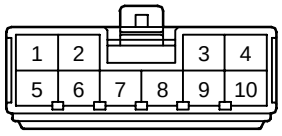	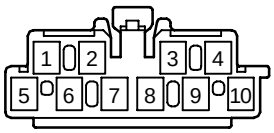	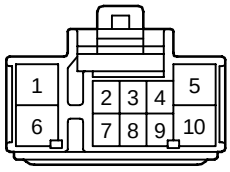
90980–10862	90980–10965	90980–10993
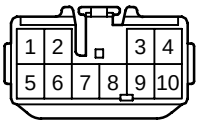	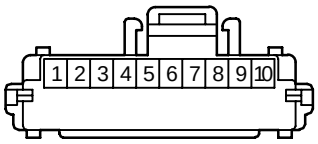	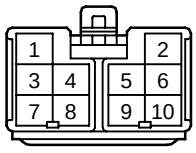
90980–10997	90980–11116	90980–11276
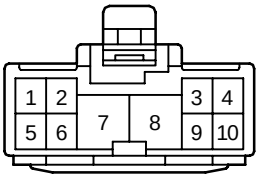	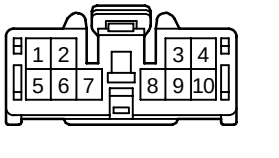	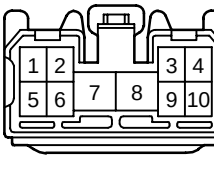
90980–11366	90980–11450	90980–11527

<FEMALE> 10P Non–waterproof Type

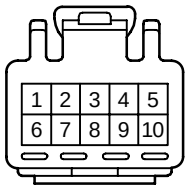	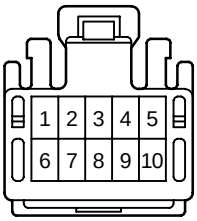	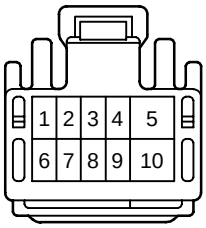
90980–11537	90980–11581	90980–11614
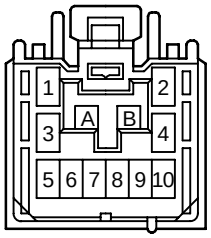	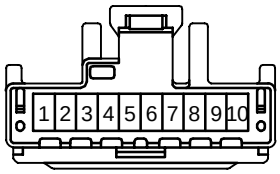	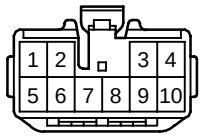
90980–11642	90980–11657	90980–11781
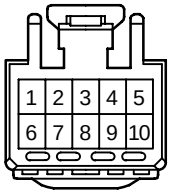	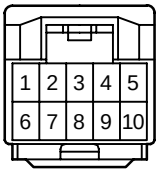	
90980–11817	90980–11923	90980–11924
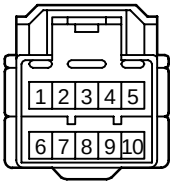	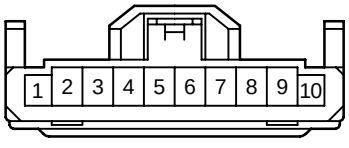	
90980–11948	90980–12008	90980–12135

<FEMALE> 10P Non–waterproof Type

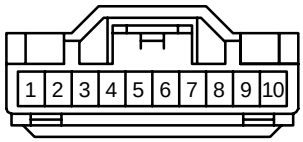	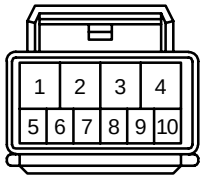	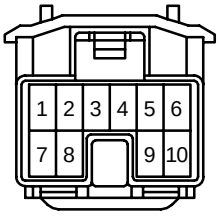
90980–12162	90980–12226	90980–12272

<FEMALE> 11P Non–waterproof Type

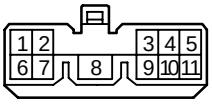	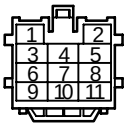	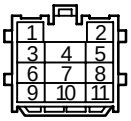
90980–10319	90980–10337	90980–10338
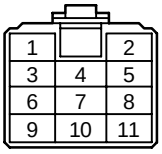	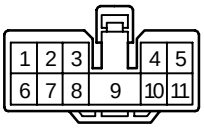	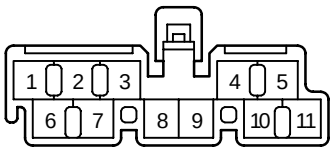
90980–10450	90980–10537	90980–10723
	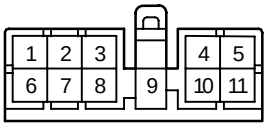	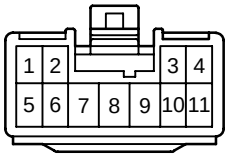
90980–10727	90980–10781	90980–10830
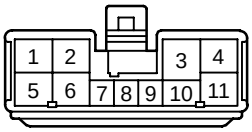	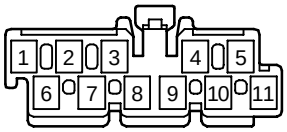	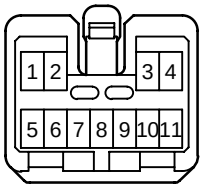
90980–10873	90980–10966	90980–11041

<FEMALE> 11P Non–waterproof Type

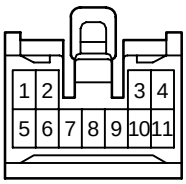	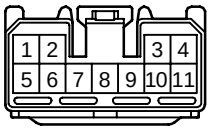	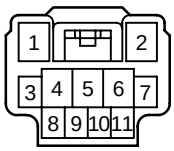
90980–11083	90980–11539	90980–12003

<FEMALE> 12P Non–waterproof Type

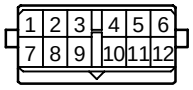	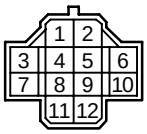	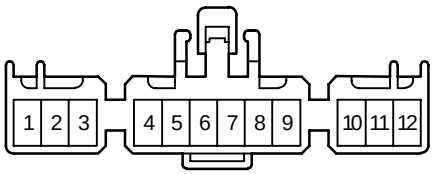
90980–10006	90980–10150	90980–10153
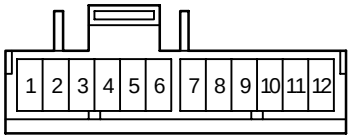	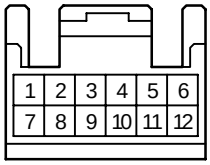	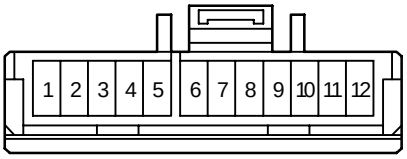
90980–10303	90980–10351	90980–10372
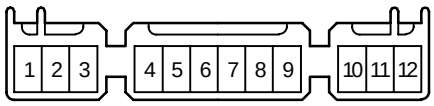	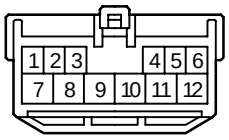	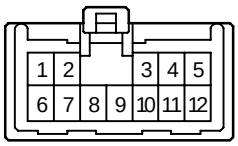
90980–10397	90980–10406	90980–10408
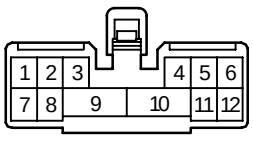	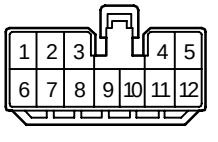	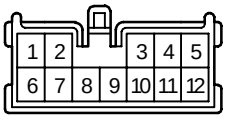
90980–10421	90980–10432	90980–10524

<FEMALE> 12P Non–waterproof Type

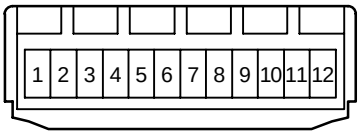 90980–10565	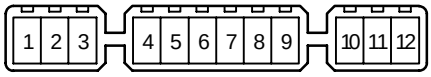 90980–10632	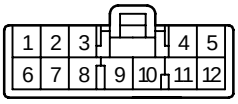 90980–10658
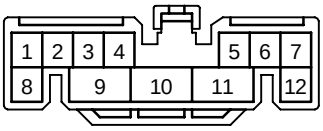 90980–10714	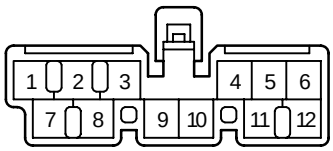 90980–10724	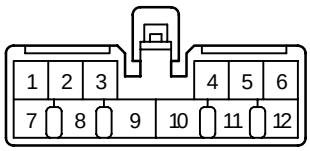 90980–10725
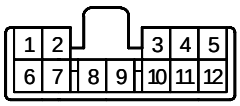 90980–10743	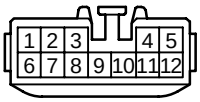 90980–10803	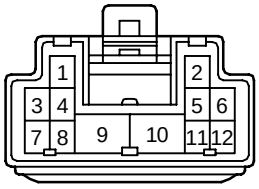 90980–10879
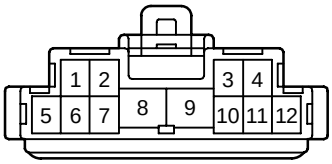 90980–10932	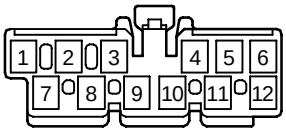 90980–10967	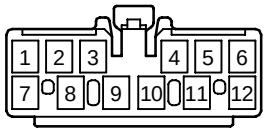 90980–10968

<FEMALE> 12P Non–waterproof Type

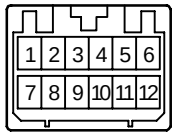	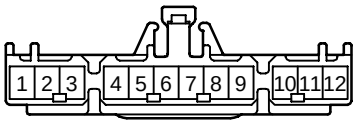	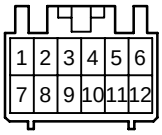
90980–10973	90980–11121	90980–11129
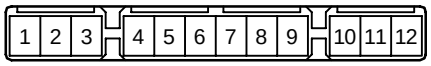	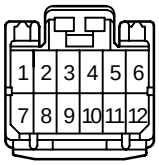	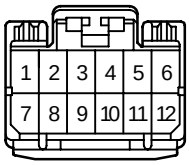
90980–11311	90980–11408	90980–11424
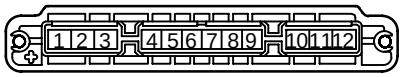	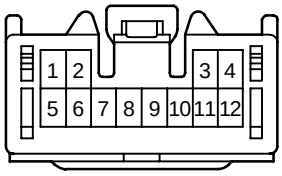	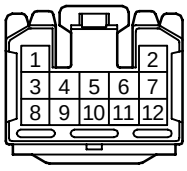
90980–11453	90980–11475	90980–11531
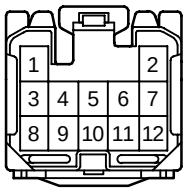	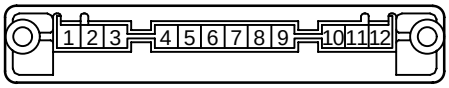	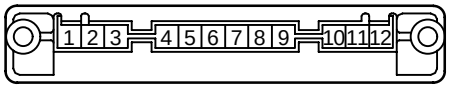
90980–11626	90980–11649	90980–11656

<FEMALE> 12P Non–waterproof Type

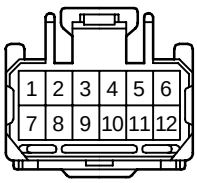	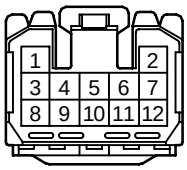	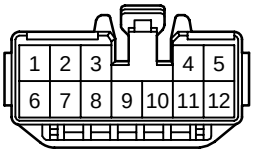
90980–11661	90980–11693	90980–11720
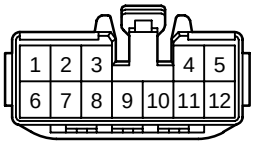	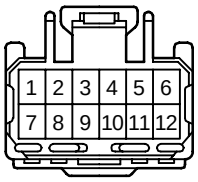	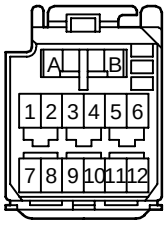
90980–11782	90980–11847	90980–11867
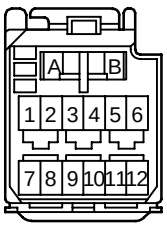	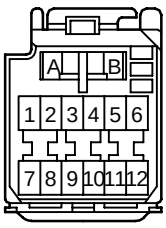	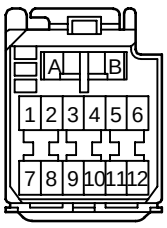
90980–11869	90980–11871	90980–11873
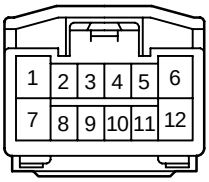	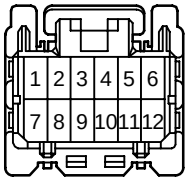	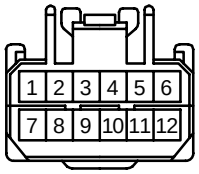
90980–11947	90980–12032	90980–12090

<FEMALE> 12P Non–waterproof Type

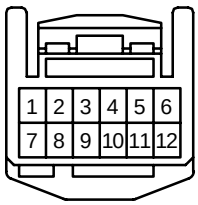	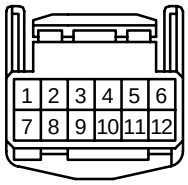	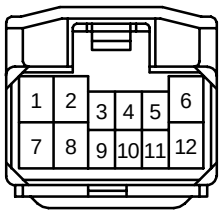
90980–12183	90980–12222	90980–12273

<FEMALE> 13P Non–waterproof Type

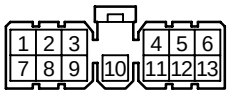	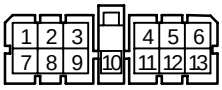	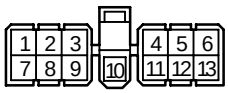
90980–10033	90980–10062	90980–10132
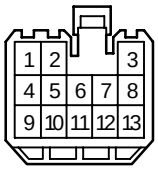	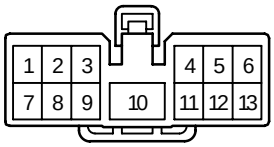	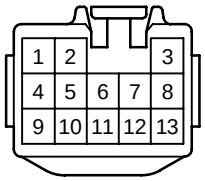
90980–10324	90980–10480	90980–10805
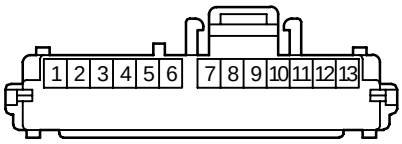	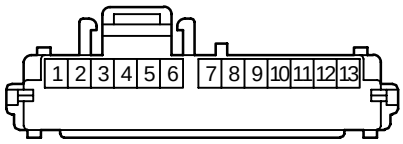	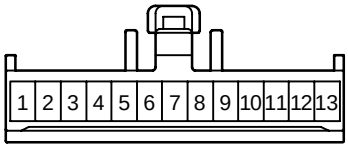
90980–11114	90980–11115	90980–11199
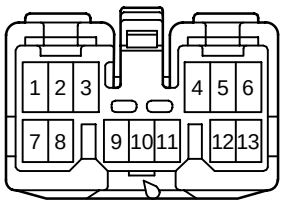	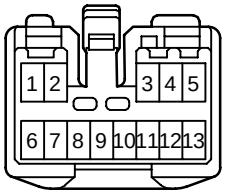	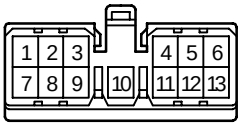
90980–11350	90980–11394	90980–11478

<FEMALE> 13P Non–waterproof Type

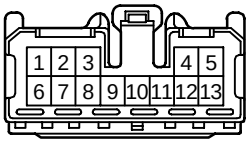	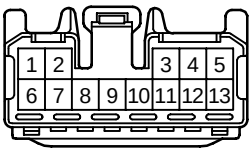	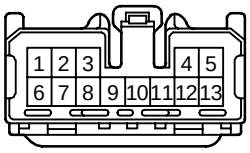
90980–11542	90980–11604	90980–11695
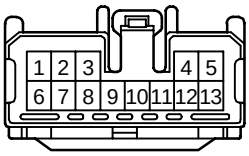	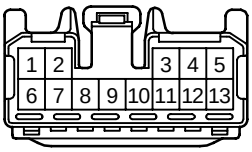	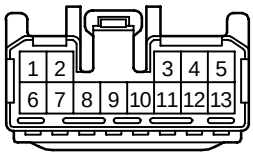
90980–11714	90980–11827	90980–11848
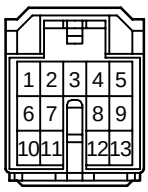	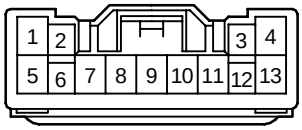	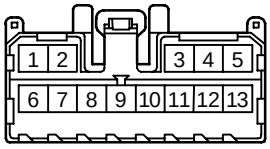
90980–11952	90980–12007	90980–12027

<FEMALE> 14P Non–waterproof Type

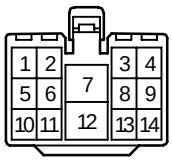

90980–10330

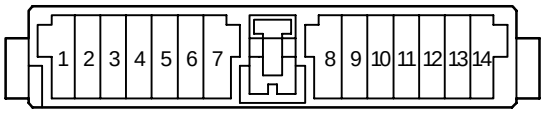

90980–10368

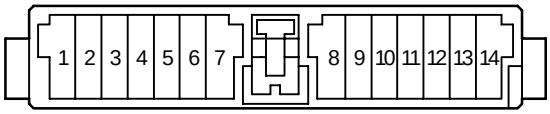

90980–10369

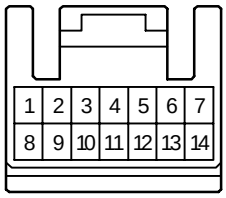

90980–10371

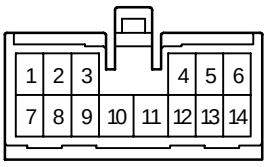

90980–10471

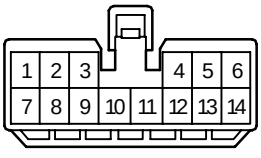

90980–10507

<FEMALE> 14P Non–waterproof Type

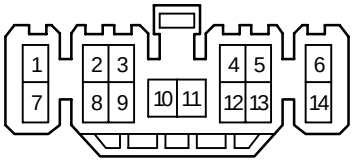

90980–10538

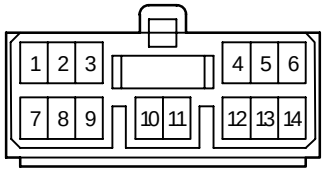

90980–10608

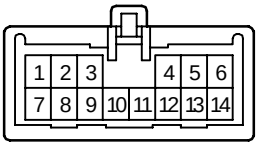

90980–10633

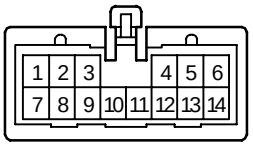

90980–10634

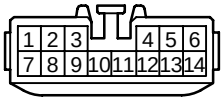

90980–10807
90980–11437

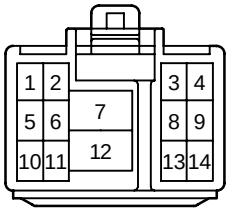

90980–10813

<FEMALE> 14P Non–waterproof Type

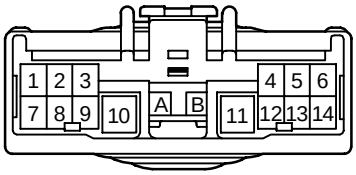

90980–10852

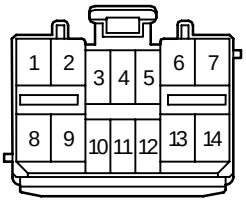

90980–11225

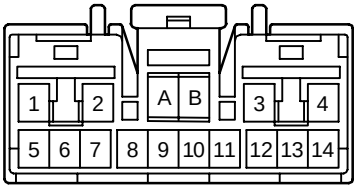

90980–11383

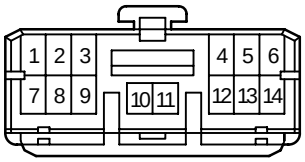

90980–11433

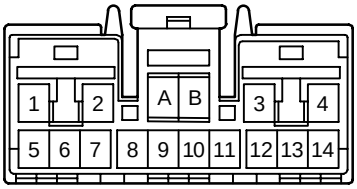

90980–11465

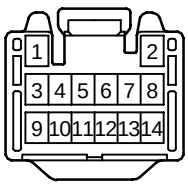

90980–11511

<FEMALE> 14P Non–waterproof Type

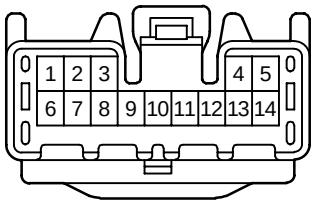

90980–11556

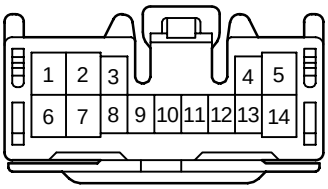

90980–11591

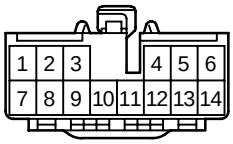

90980–11791

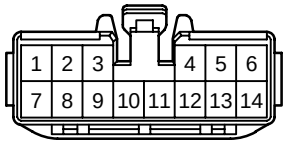

90980–11805

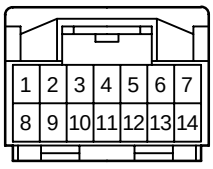

90980–11911

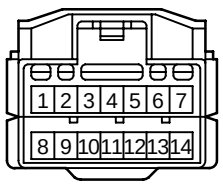

90980–11925

<FEMALE> 14P Non–waterproof Type

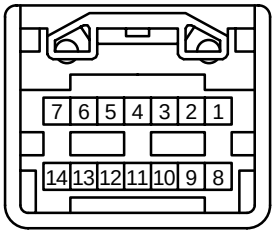 90980–12082	

<FEMALE> 15P Non–waterproof Type

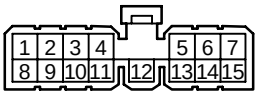

90980–10066

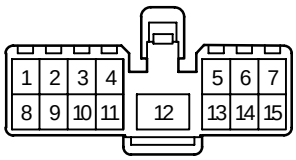

90980–10331

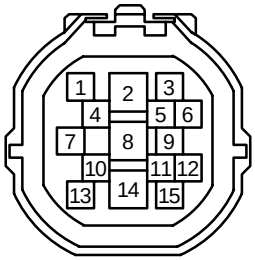

90980–10443

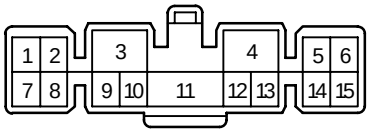

90980–10563

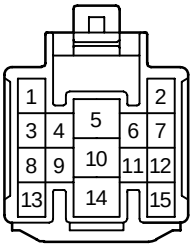

90980–10815

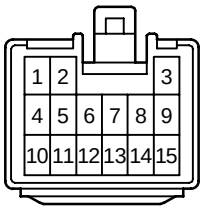

90980–10828

<FEMALE> 15P Non–waterproof Type

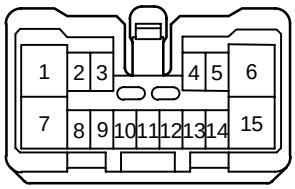

90980–11042

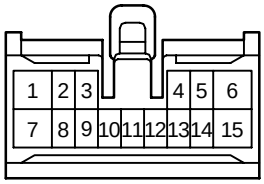

90980–11056

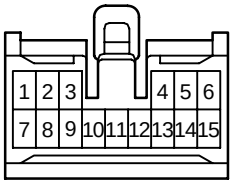

90980–11179

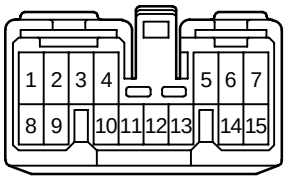

90980–11264

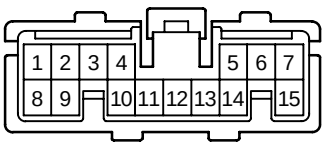

90980–11372

<FEMALE> 16P Non–waterproof Type

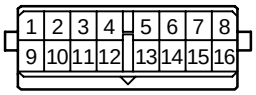

90980–10008

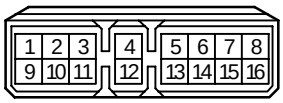

90980–10028

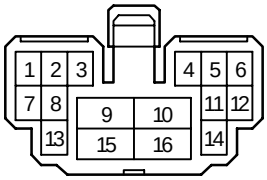

90980–10454

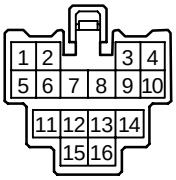

90980–10486

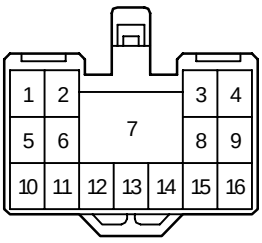

90980–10522

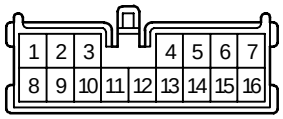

90980–10525

<FEMALE> 16P Non–waterproof Type

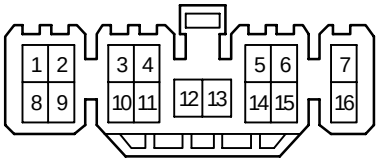

90980–10539

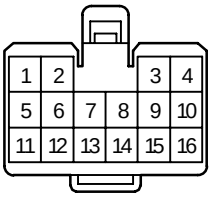

90980–10543

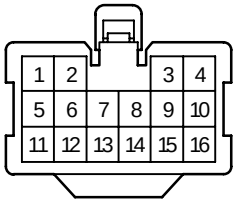

90980–10561

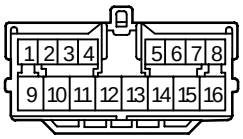

90980–10611

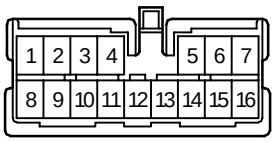

90980–10613

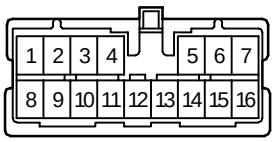

90980–10614

<FEMALE> 16P Non–waterproof Type

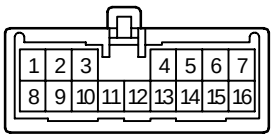

90980–10635

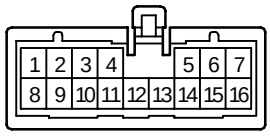

90980–10636

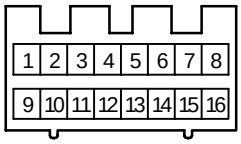

90980–10740

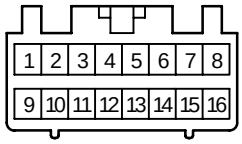

90980–10764

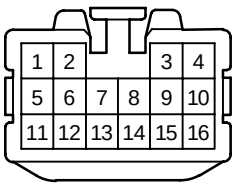

90980–10809
90980–11445

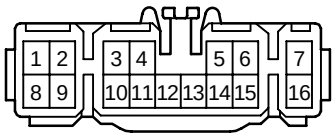

90980–10848

<FEMALE> 16P Non–waterproof Type

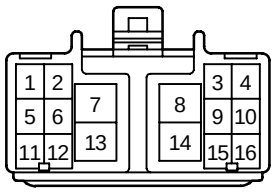

90980–10885

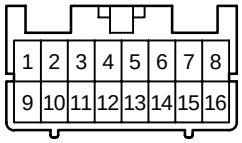

90980–11082

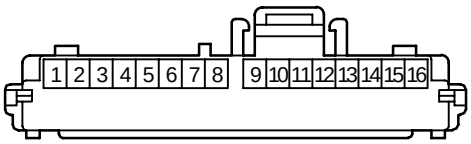

90980–11113

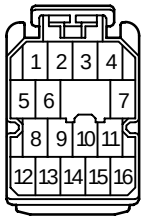

90980–11219

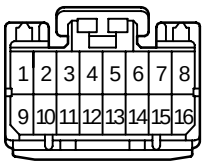

90980–11391

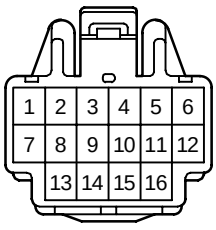

90980–11416

<FEMALE> 16P Non–waterproof Type

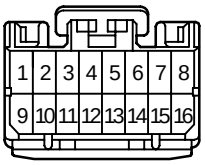

90980–11425

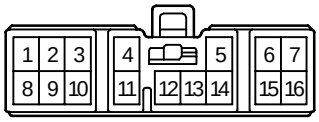

90980–11435

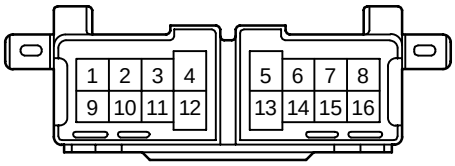

90980–11547

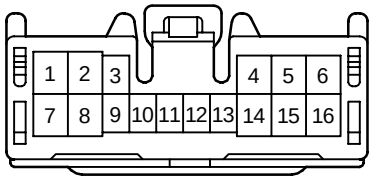

90980–11562

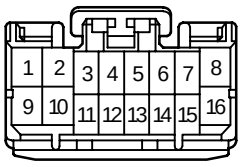

90980–11565

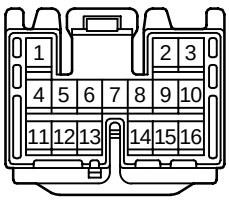

90980–11574

<FEMALE> 16P Non–waterproof Type

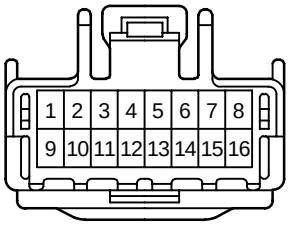

90980–11648

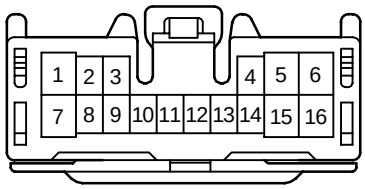

90980–11652

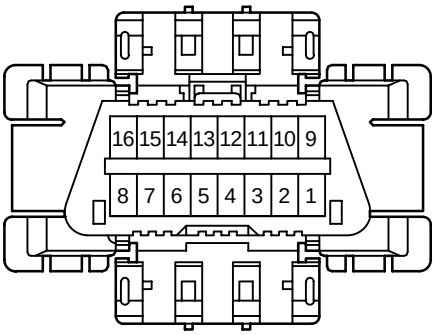

90980–11665
90980–11978

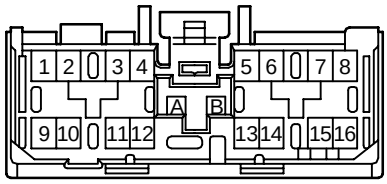

90980–11681

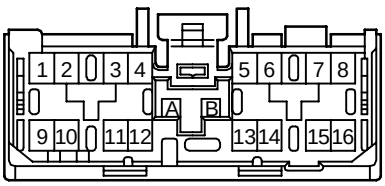

90980–11683

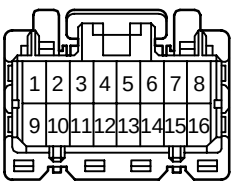

90980–11787

<FEMALE> 16P Non–waterproof Type

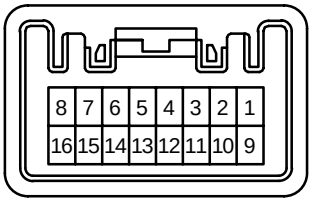

90980–12093

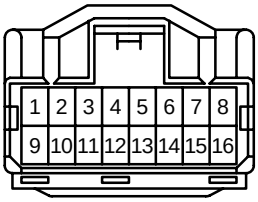

90980–12094

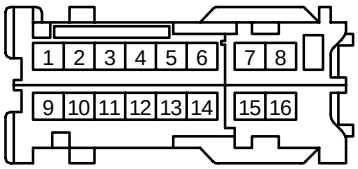

90980–12101

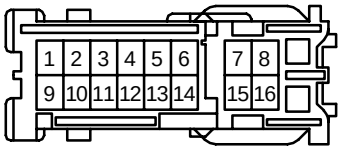

90980–12104

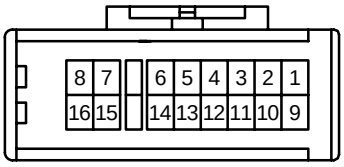

90980–12105

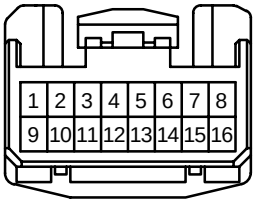

90980–12155

<FEMALE> 16P Non–waterproof Type

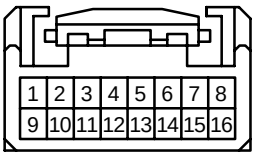

90980–12156

<FEMALE> 17P Non–waterproof Type

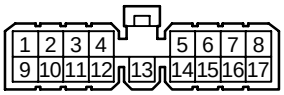

90980–10031

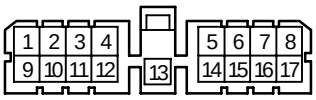

90980–10037

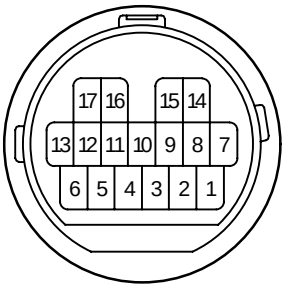

90980–10731
90980–11417
90980–11420

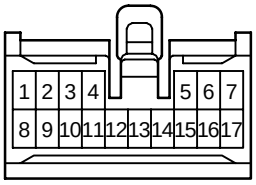

90980–11203

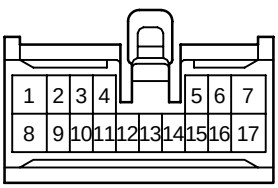

90980–11310

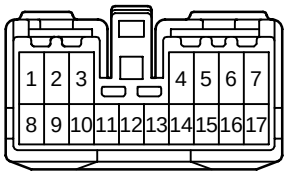

90980–11335

<FEMALE> 17P Non–waterproof Type

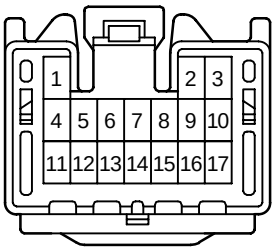

90980–11506

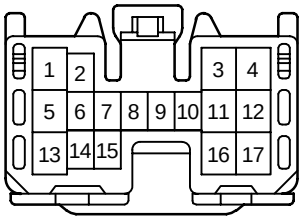

90980–11560

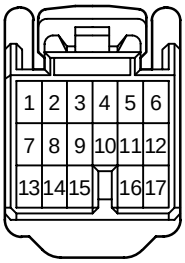

90980–11586

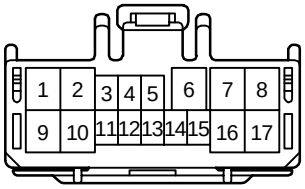

90980–11671

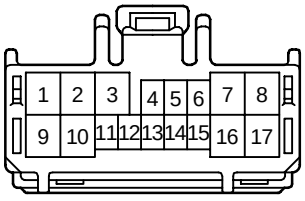

90980–11672

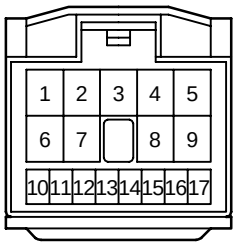

90980–11954

<FEMALE> 18P Non–waterproof Type

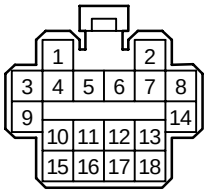

90980–10285

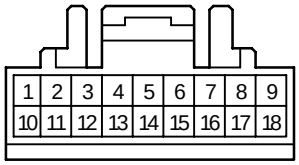

90980–10295

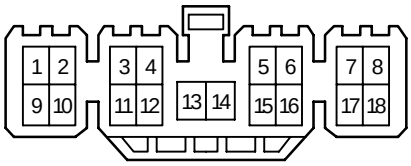

90980–10326

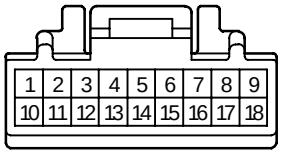

90980–10350

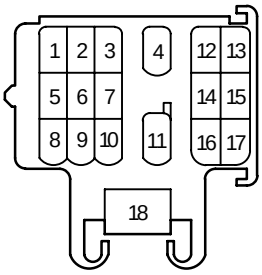

90980–10530

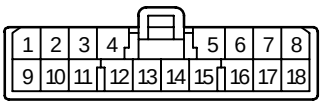

90980–10656

<FEMALE> 18P Non–waterproof Type

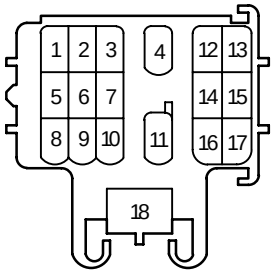

90980–10778

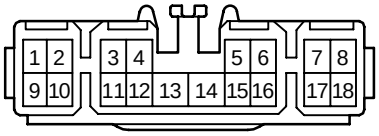

90980–10819

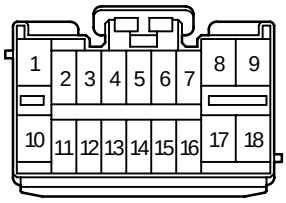

90980–11224

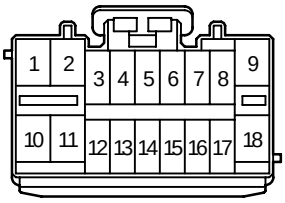

90980–11226

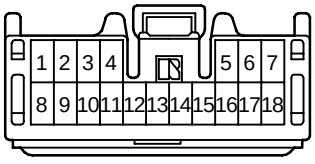

90980–11497

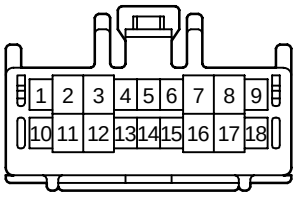

90980–11594

<FEMALE> 18P Non–waterproof Type

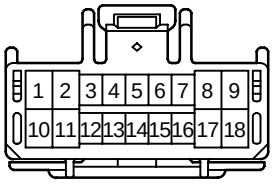

90980–11595

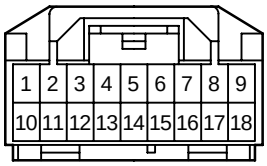

90980–11913

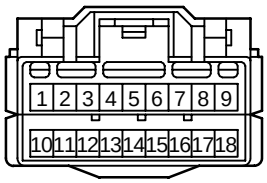

90980–11914

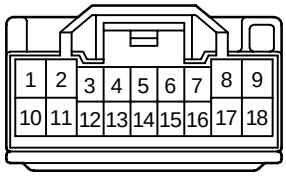

90980–11973

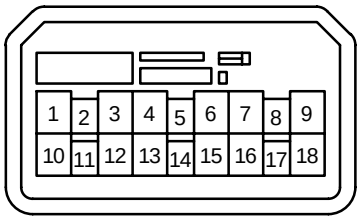

90980–12122

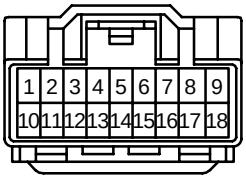

90980–12174

<FEMALE> 19P Non–waterproof Type

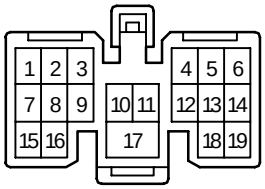

90980–10675

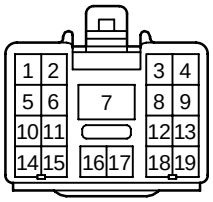

90980–10857

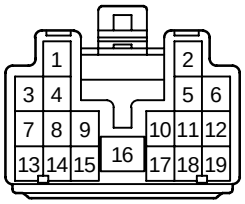

90980–10883

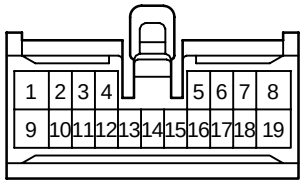

90980–11205

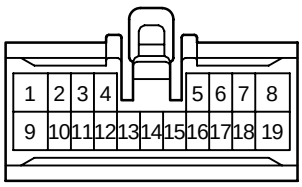

90980–11308

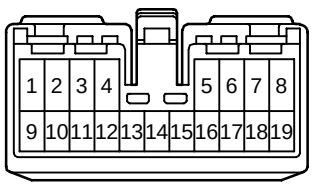

90980–11377

<FEMALE> 19P Non–waterproof Type

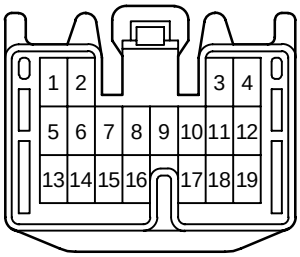

90980–11571

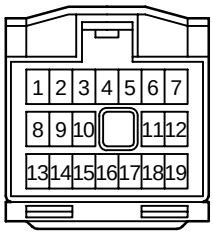

90980–11955

<FEMALE> 20P Non–waterproof Type

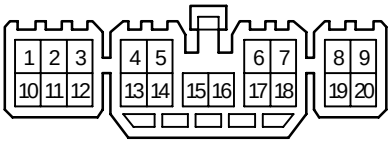

90980–10327

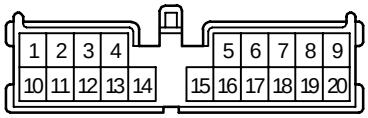

90980–10589

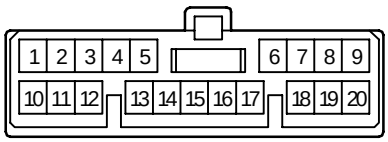

90980–10607

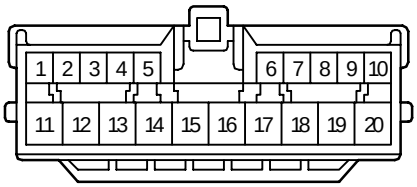

90980–10612

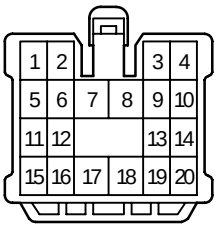

90980–10640

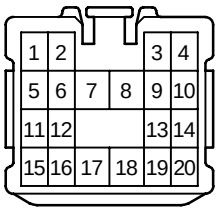

90980–10811
90980–11441

<FEMALE> 20P Non–waterproof Type

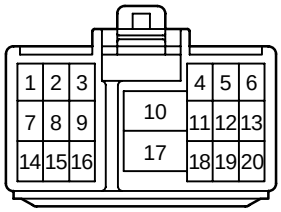

90980–10817

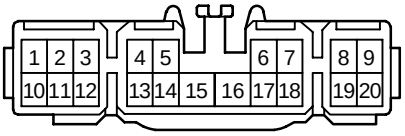

90980–10821

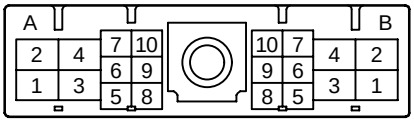

90980–10952

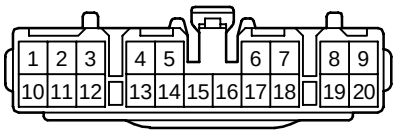

90980–11260

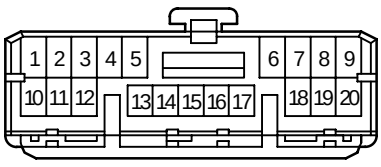

90980–11432

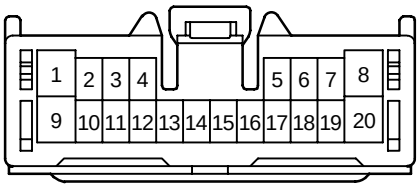

90980–11469

<FEMALE> 20P Non–waterproof Type

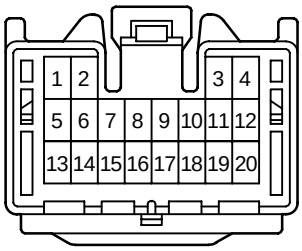

90980–11499

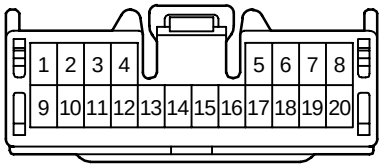

90980–11558

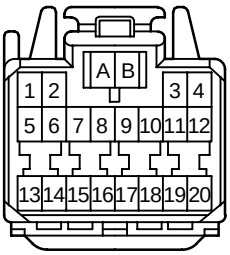

90980–11868

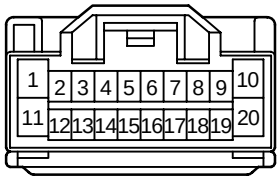

90980–11971

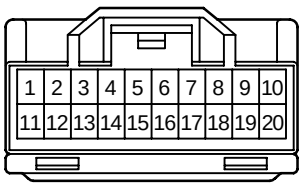

90980–11974

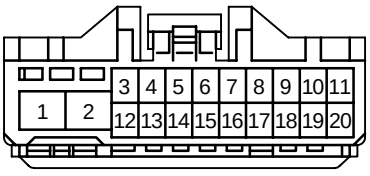

90980–12034

<FEMALE> 20P Non–waterproof Type

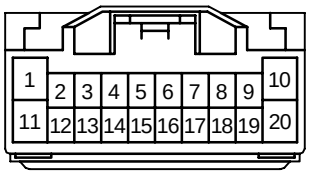

90980–12038

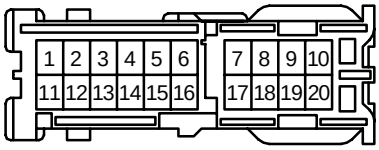

90980–12106

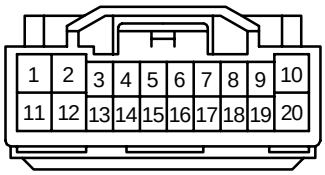

90980–12166

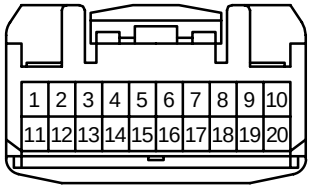

90980–12259

<FEMALE> 21P Non–waterproof Type

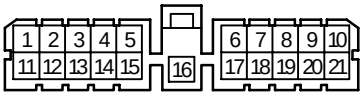

90980–10064

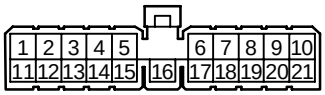

90980–10207

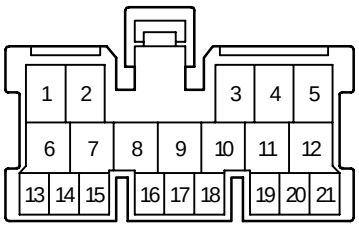

90980–10473

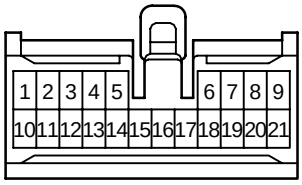

90980–11125

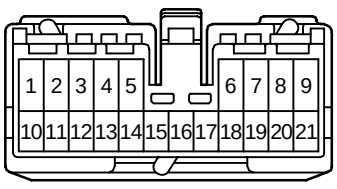

90980–11379

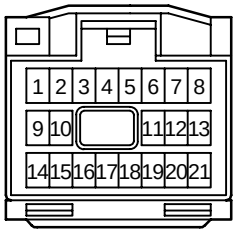

90980–11956

<FEMALE> 21P Non–waterproof Type

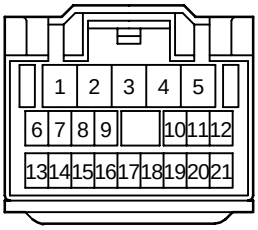

90980–11957

<FEMALE> 22P Non–waterproof Type

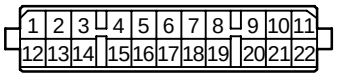

90980–10010

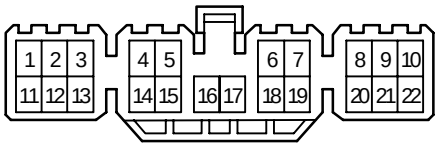

90980–10328

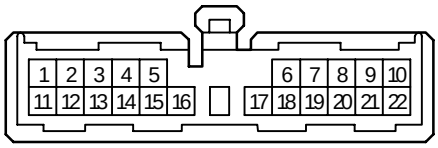

90980–10456

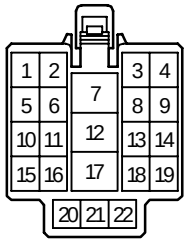

90980–10458

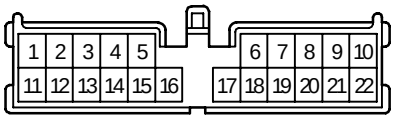

90980–10526

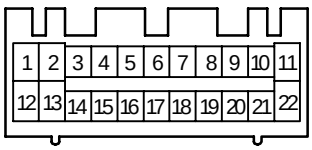

90980–10741

<FEMALE> 22P Non–waterproof Type

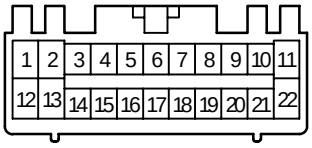

90980–10765

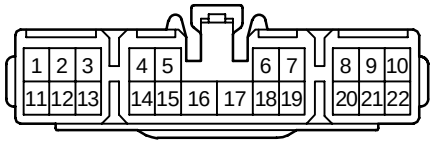

90980–10875

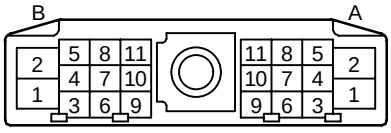

90980–10953

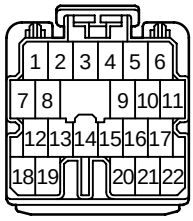

90980–11220

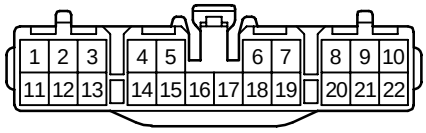

90980–11238

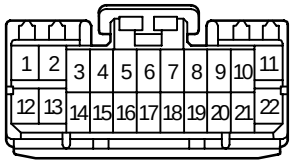

90980–11392

<FEMALE> 22P Non–waterproof Type

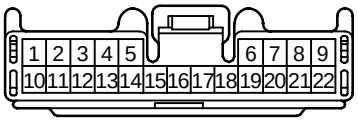

90980–11502

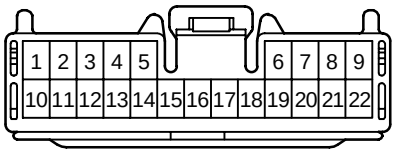

90980–11628

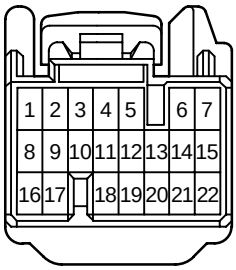

90980–11638

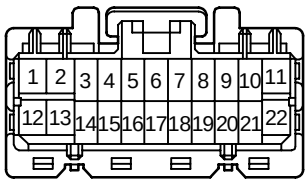

90980–11788

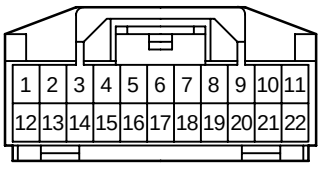

90980–11915

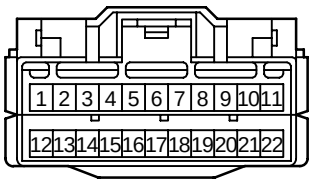

90980–11927

<FEMALE> 23P Non–waterproof Type

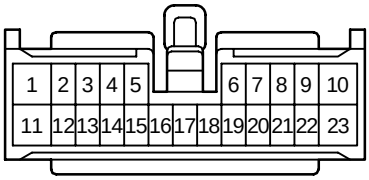

90980–10921

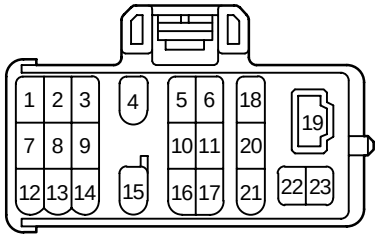

90980–11195

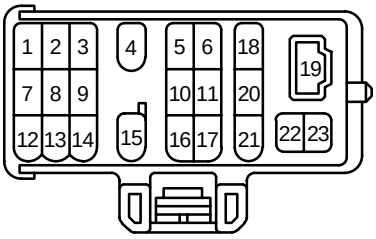

90980–11323

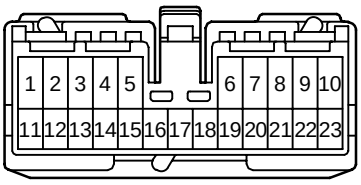

90980–11381

<FEMALE> 24P Non–waterproof Type

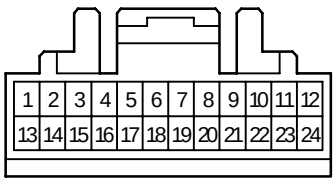

90980–10296

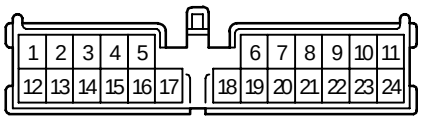

90980–10585

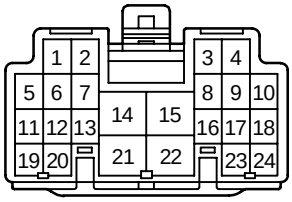

90980–10881

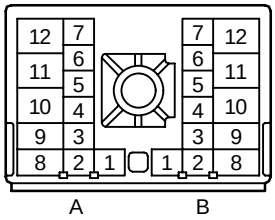

90980–10955

<FEMALE> 24P Non–waterproof Type

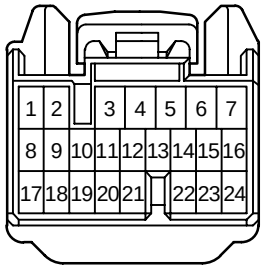

90980–11476

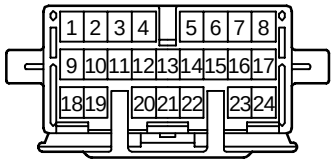

90980–11509

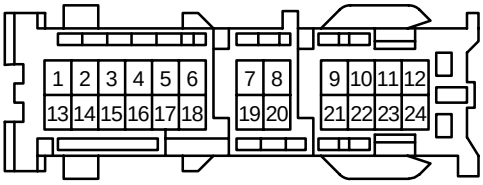

90980–12070

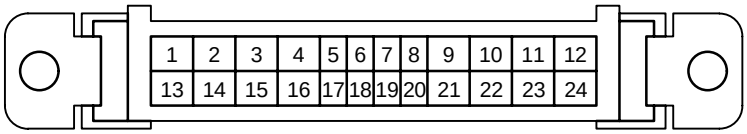

90980–12079

<FEMALE> 24P Non–waterproof Type

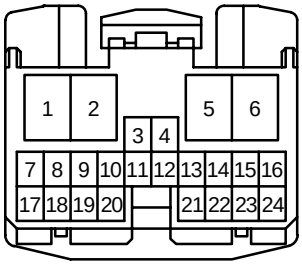

90980–12149

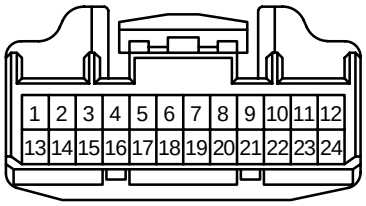

90980–12200

<FEMALE> 25P Non–waterproof Type

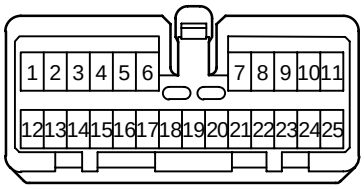

90980–11043

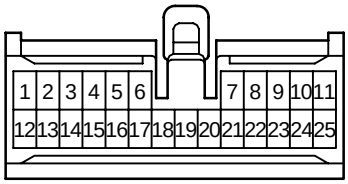

90980–11055

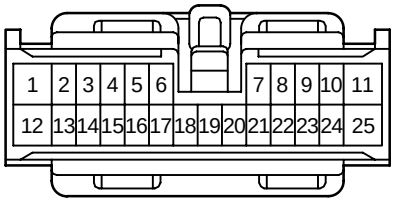

90980–11058

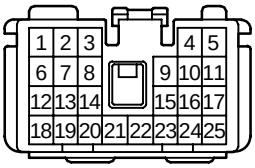

90980–11375

<FEMALE> 25P Non–waterproof Type

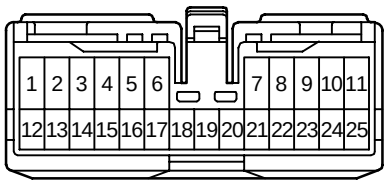

90980–11404

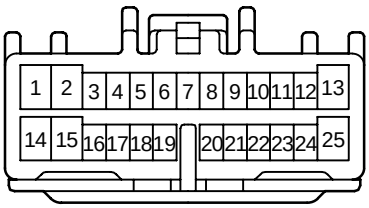

90980–11877

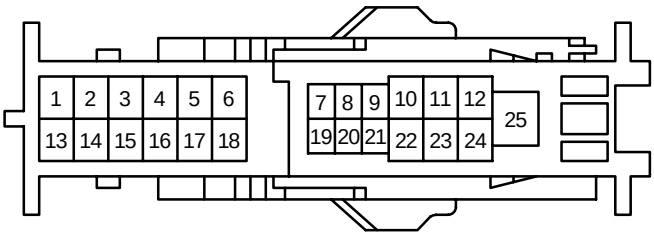

90980–12278

<FEMALE> 26P Non–waterproof Type

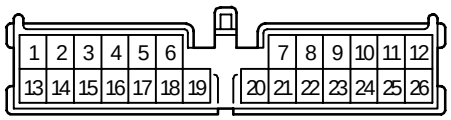

90980–10587

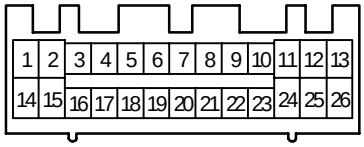

90980–10739

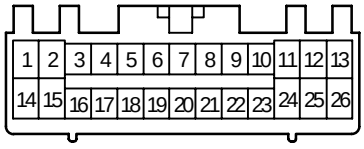

90980–10763

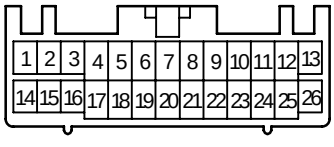

90980–10918

<FEMALE> 26P Non–waterproof Type

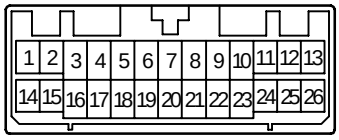

90980–10925

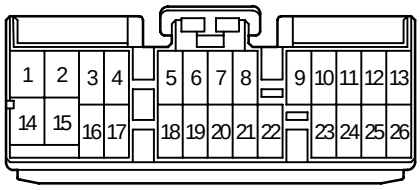

90980–11234

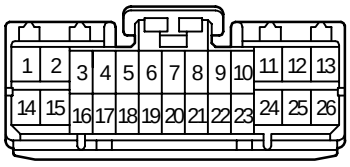

90980–11390

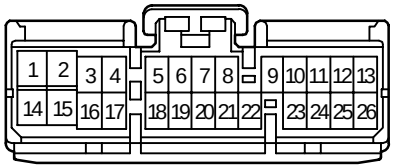

90980–11406

<FEMALE> 26P Non–waterproof Type

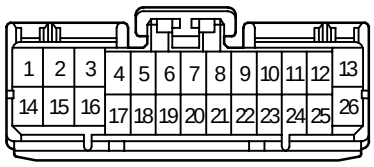

90980–11422

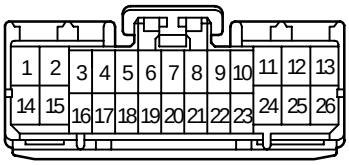

90980–11423

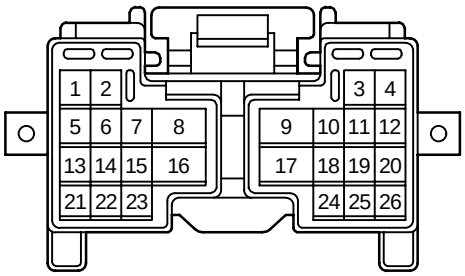

90980–11611

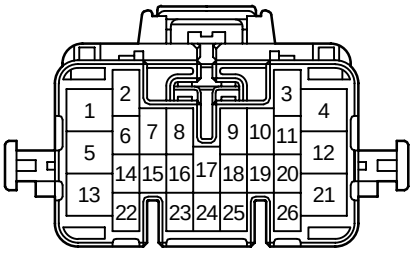

90980–11632

<FEMALE> 26P Non–waterproof Type

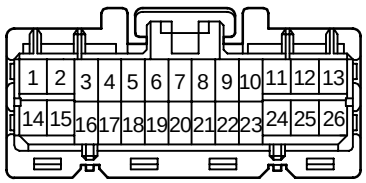

90980–11786

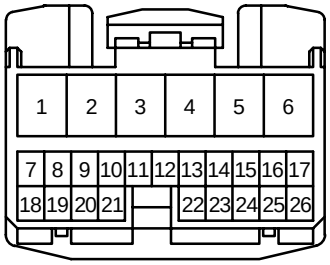

90980–12150

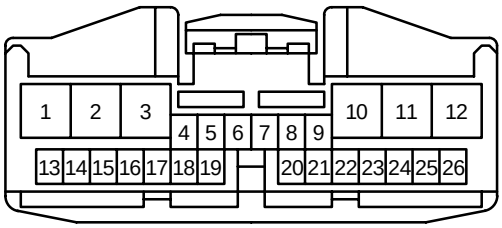

90980–12203

<FEMALE> 27P Non–waterproof Type

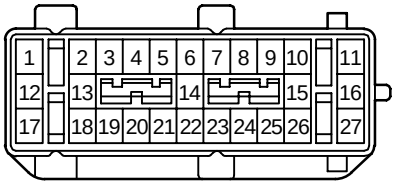

90980–11670

<FEMALE> 28P Non–waterproof Type

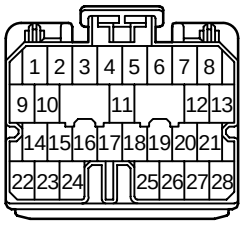

90980–11218

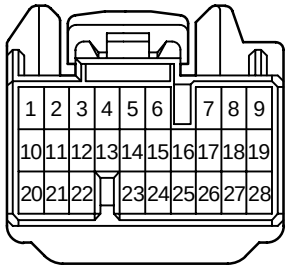

90980–11637

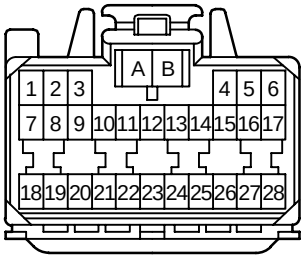

90980–11872

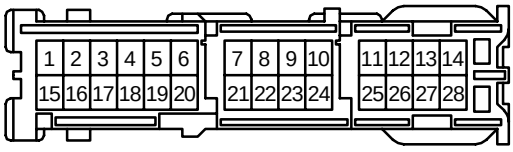

90980–12102

<FEMALE> 30P Non–waterproof Type

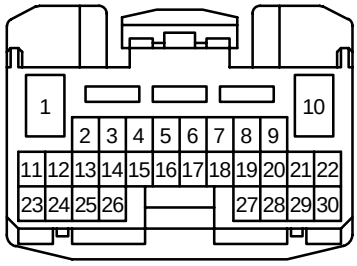

90980–12151

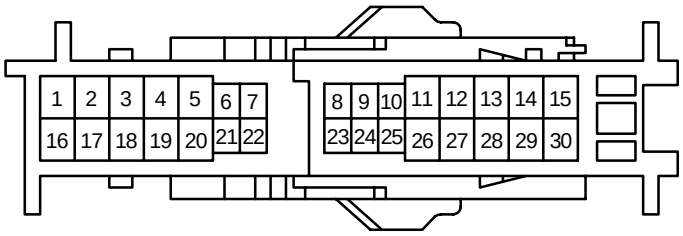

90980–12277

<FEMALE> 31P Non–waterproof Type

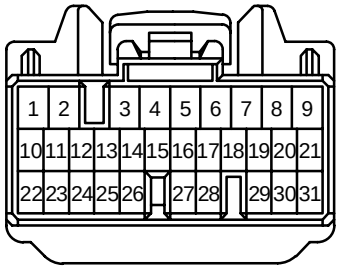

90980–11421

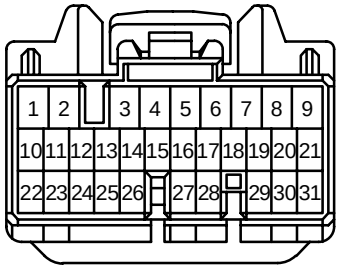

90980–11935

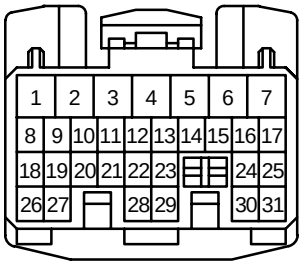

90980–12142

<FEMALE> 32P Non–waterproof Type

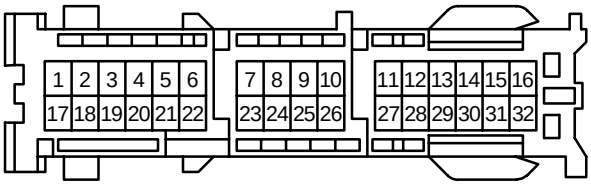

90980–12071

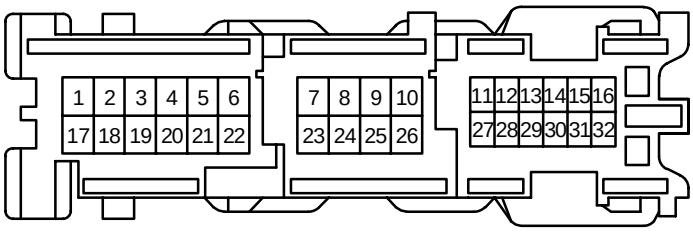

90980–12096

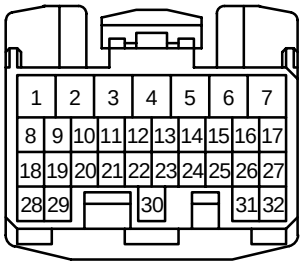

90980–12143

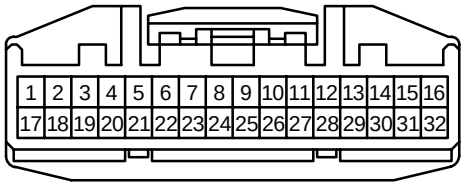

90980–12153

<FEMALE> 32P Non–waterproof Type

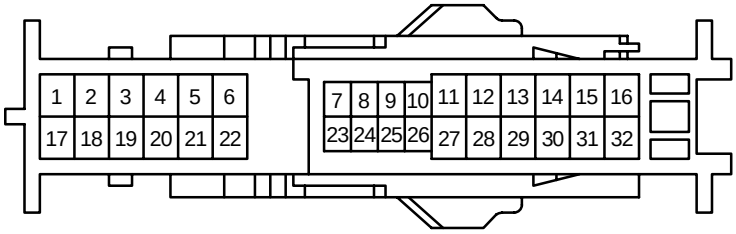

90980–12275

<FEMALE> 34P Non–waterproof Type

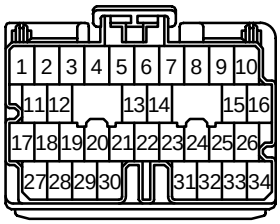

90980–11221

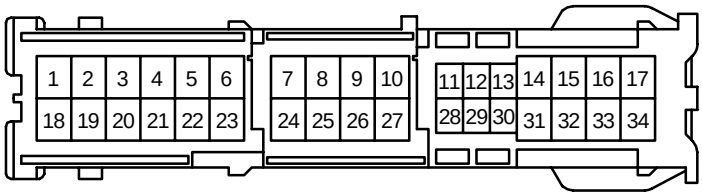

90980–12114

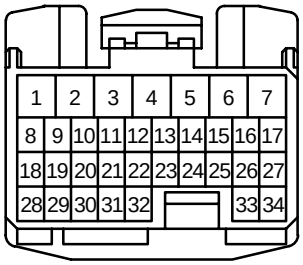

90980–12144

<FEMALE> 35P, 36P Non–waterproof Type

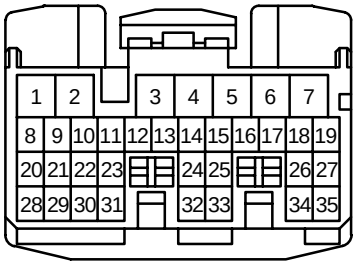

90980–12145

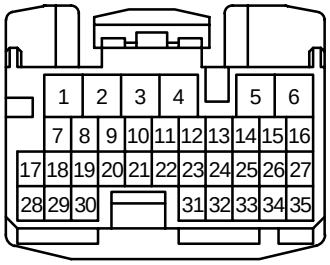

90980–12146

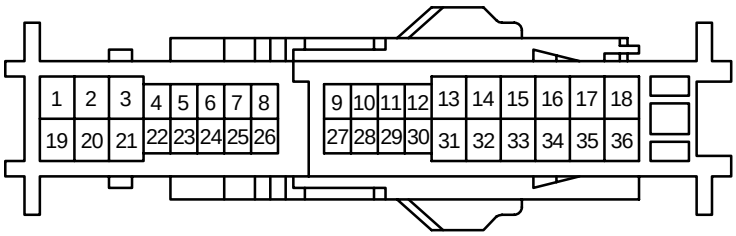

90980–12274

<FEMALE> 38P Non–waterproof Type

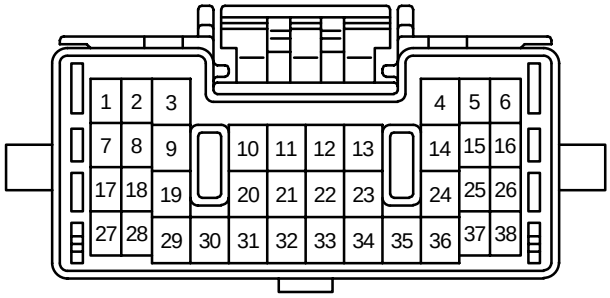

90980–11555

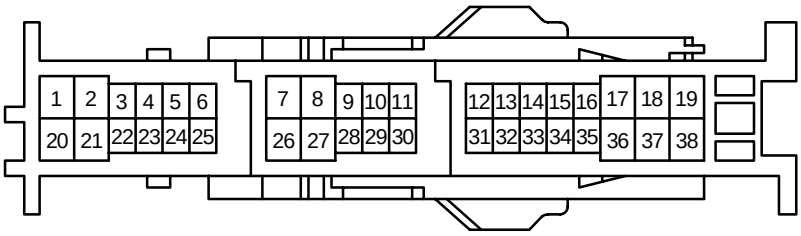

90980–12276

<FEMALE> 40P Non–waterproof Type

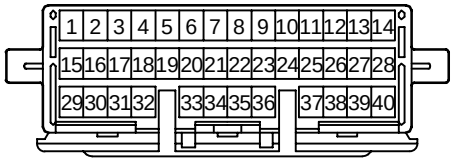

90980–11508

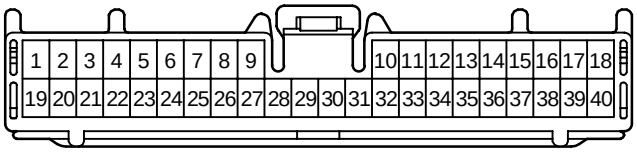

90980–11618

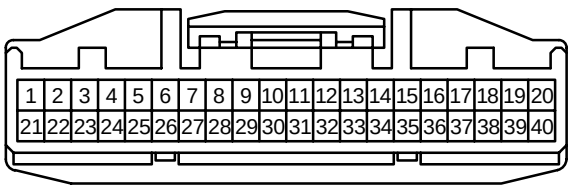

90980–12169

<FEMALE> 40P Non–waterproof Type

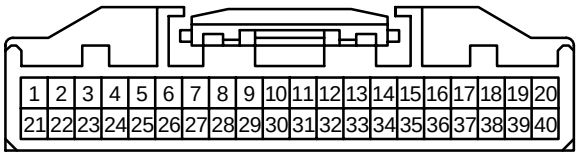

90980–12170

<FEMALE> 42P, 43P, 46P Non–waterproof Type

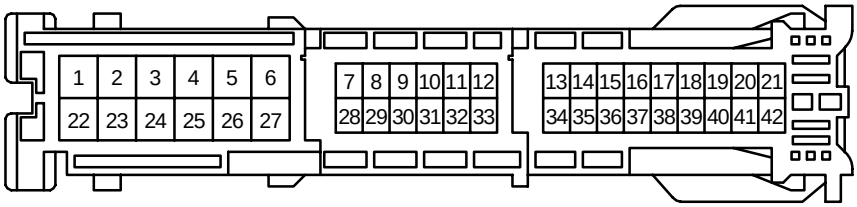

90980–12184

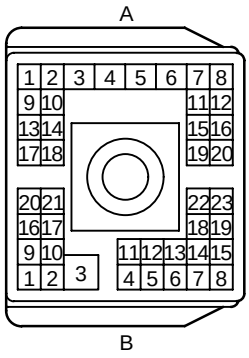

90980–11360

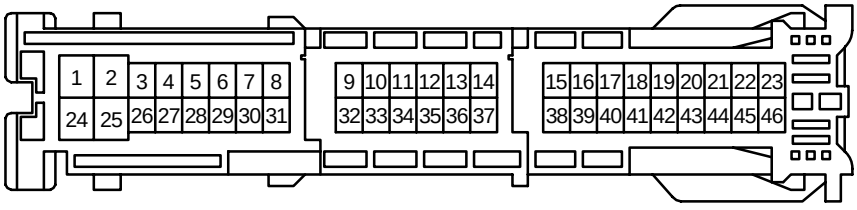

90980–12179

<FEMALE> 49P, 55P, 83P Non–waterproof Type

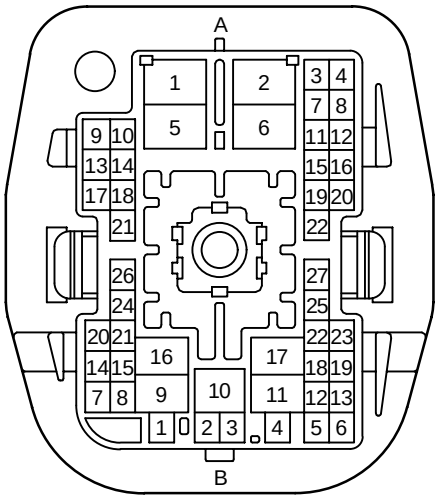

90980–11431

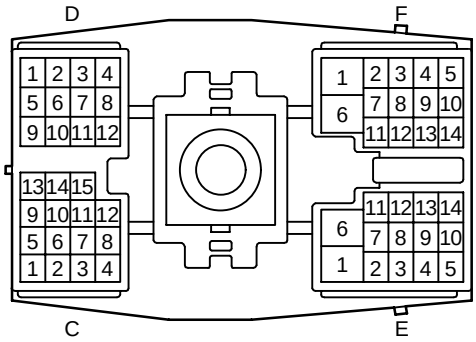

90980–11359

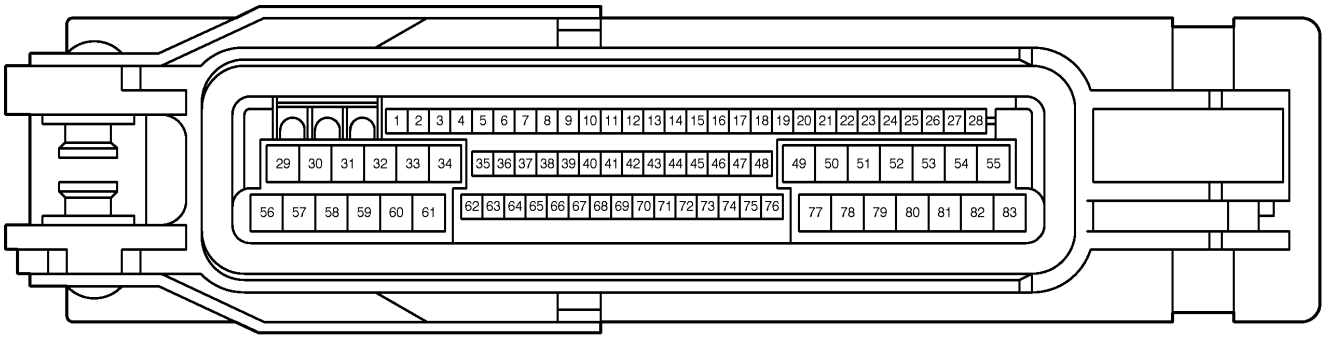

90980–11906

<FEMALE> 88P Non–waterproof Type

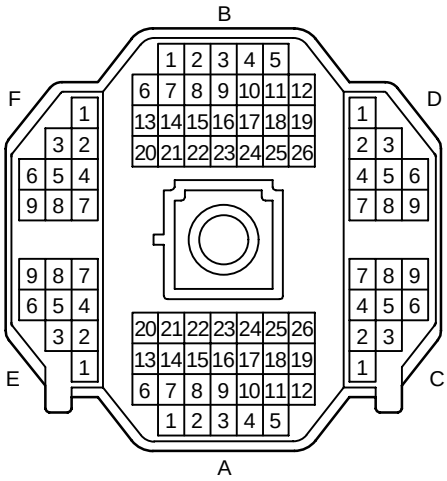

90980–10950

<FEMALE> 10P Non–waterproof Type

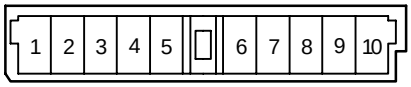 90980–10158	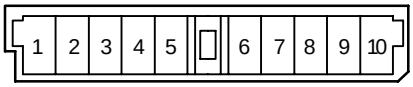 90980–10159	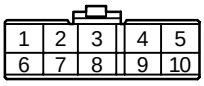 90980–10177
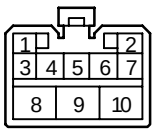 90980–10282	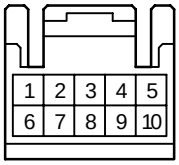 90980–10294	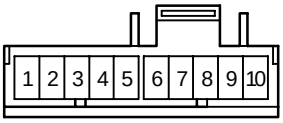 90980–10302
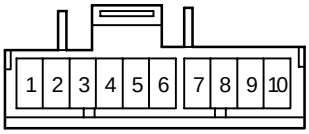 90980–10304	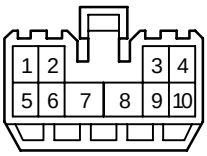 90980–10322	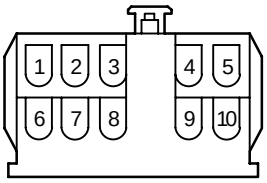 90980–10377
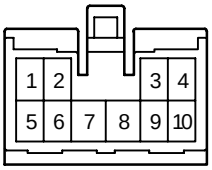 90980–10469	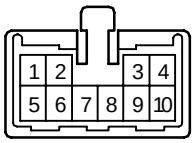 90980–10528	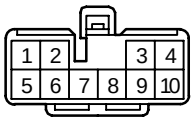 90980–10669

<FEMALE> 10P Non–waterproof Type

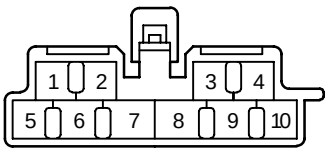	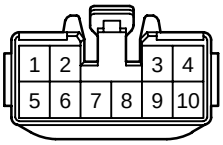	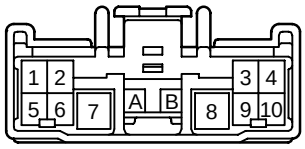
90980–10721	90980–10801	90980–10822
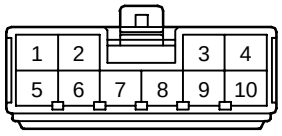	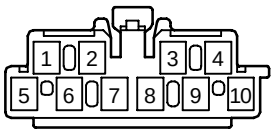	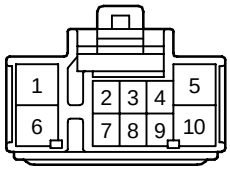
90980–10862	90980–10965	90980–10993
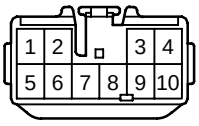	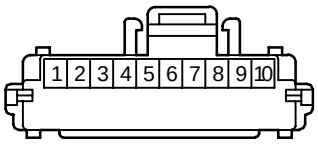	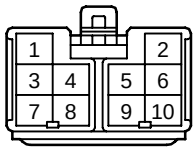
90980–10997	90980–11116	90980–11276
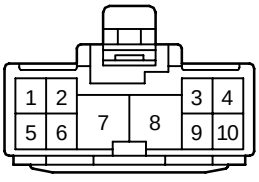	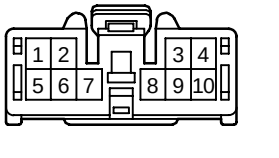	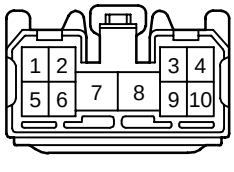
90980–11366	90980–11450	90980–11527

<FEMALE> 10P Non–waterproof Type

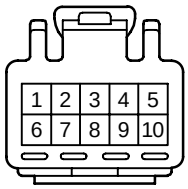	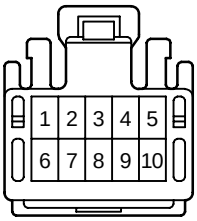	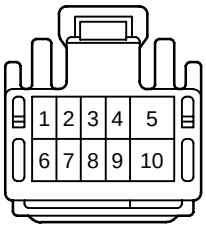
90980–11537	90980–11581	90980–11614
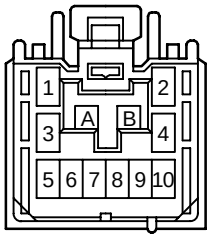	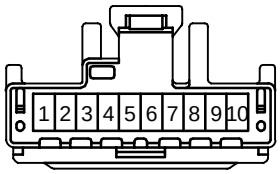	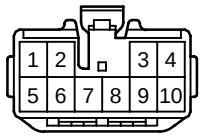
90980–11642	90980–11657	90980–11781
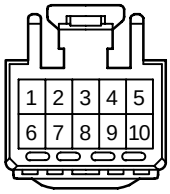	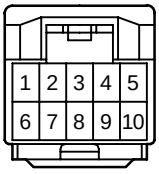	
90980–11817	90980–11923	90980–11924
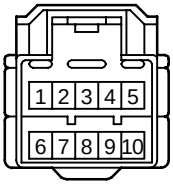	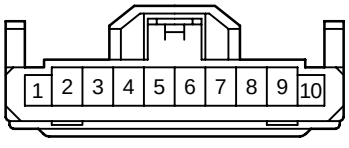	
90980–11948	90980–12008	90980–12135

<FEMALE> 10P Non–waterproof Type

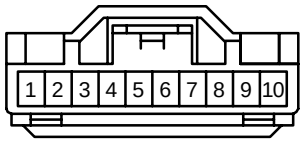	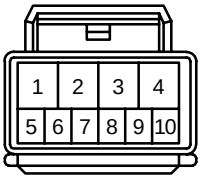	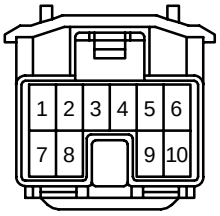
90980–12162	90980–12226	90980–12272

<FEMALE> 11P Non–waterproof Type

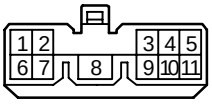	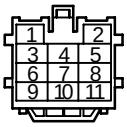	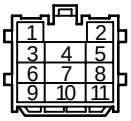
90980–10319	90980–10337	90980–10338
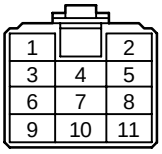	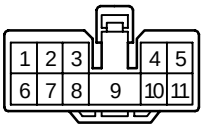	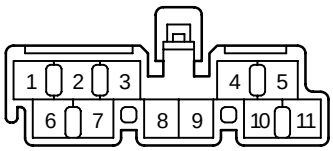
90980–10450	90980–10537	90980–10723
	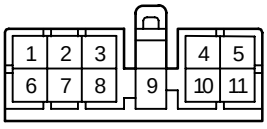	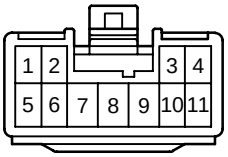
90980–10727	90980–10781	90980–10830
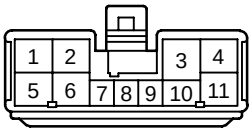	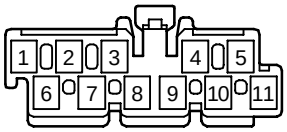	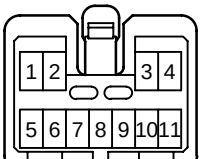
90980–10873	90980–10966	90980–11041

<FEMALE> 11P Non–waterproof Type

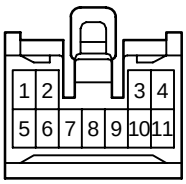	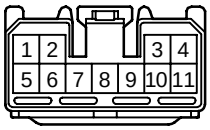	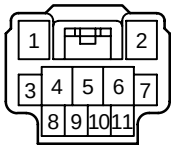
90980–11083	90980–11539	90980–12003

<FEMALE> 12P Non–waterproof Type

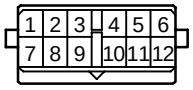	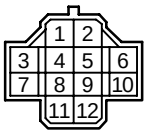	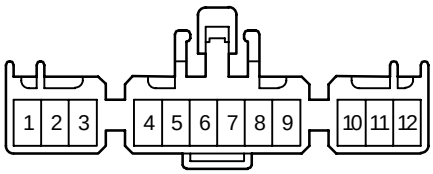
90980–10006	90980–10150	90980–10153
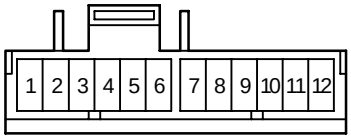	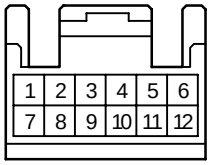	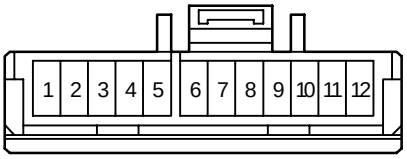
90980–10303	90980–10351	90980–10372
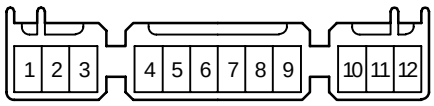	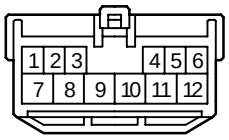	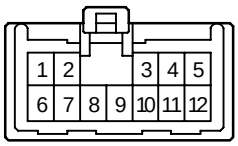
90980–10397	90980–10406	90980–10408
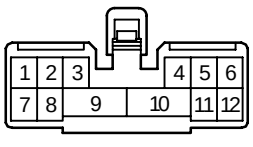	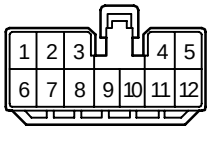	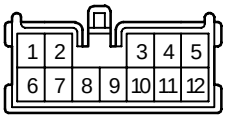
90980–10421	90980–10432	90980–10524

<FEMALE> 12P Non–waterproof Type

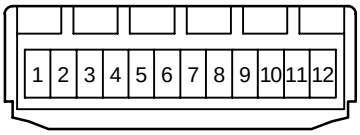 90980–10565	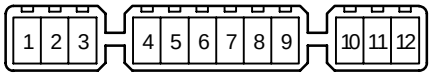 90980–10632	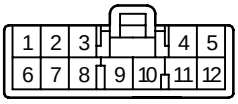 90980–10658
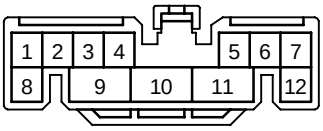 90980–10714	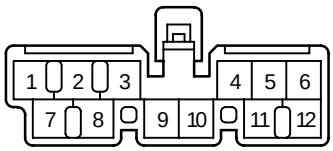 90980–10724	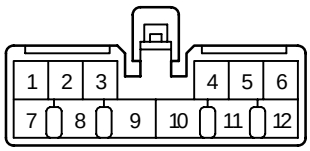 90980–10725
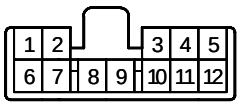 90980–10743	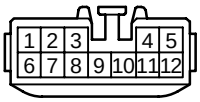 90980–10803	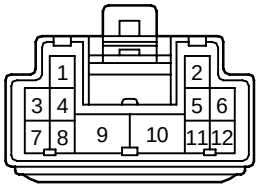 90980–10879
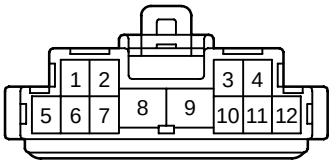 90980–10932	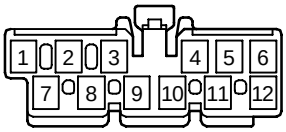 90980–10967	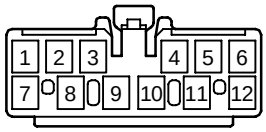 90980–10968

<FEMALE> 12P Non–waterproof Type

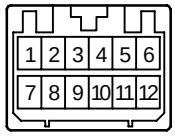	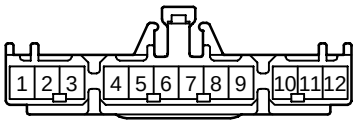	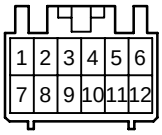
90980–10973	90980–11121	90980–11129
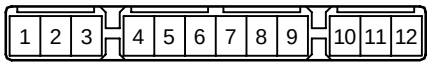	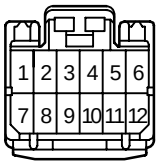	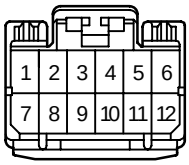
90980–11311	90980–11408	90980–11424
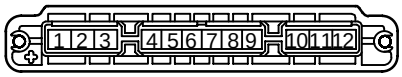	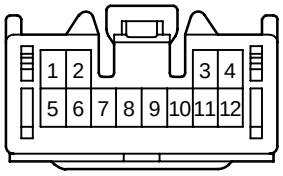	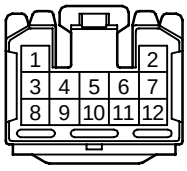
90980–11453	90980–11475	90980–11531
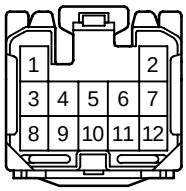	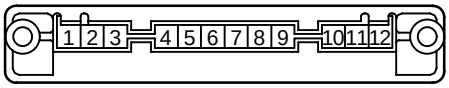	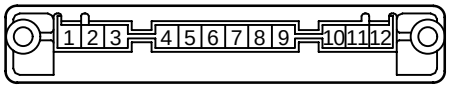
90980–11626	90980–11649	90980–11656

<FEMALE> 12P Non–waterproof Type

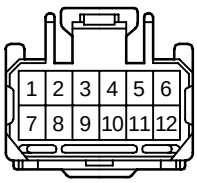	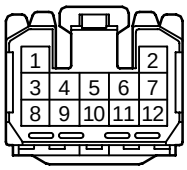	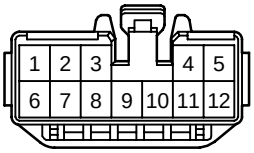
90980–11661	90980–11693	90980–11720
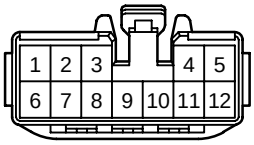	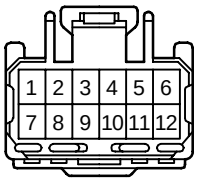	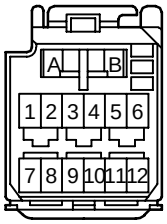
90980–11782	90980–11847	90980–11867
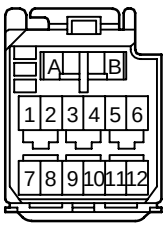	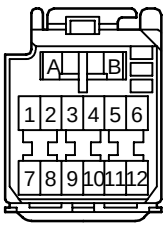	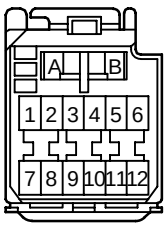
90980–11869	90980–11871	90980–11873
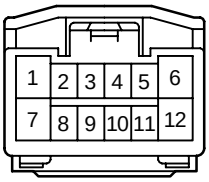	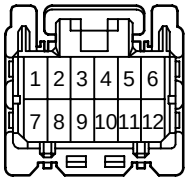	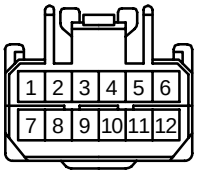
90980–11947	90980–12032	90980–12090

<FEMALE> 12P Non–waterproof Type

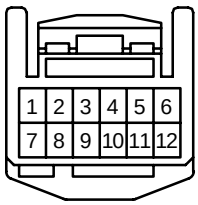	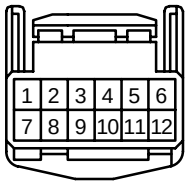	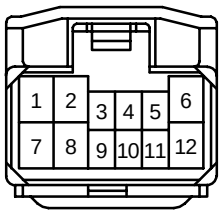
90980–12183	90980–12222	90980–12273

<FEMALE> 13P Non–waterproof Type

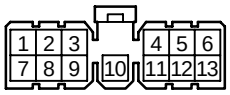	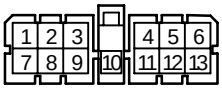	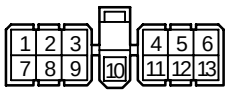
90980–10033	90980–10062	90980–10132
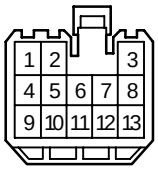	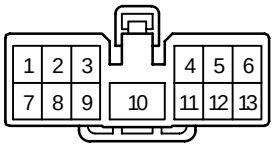	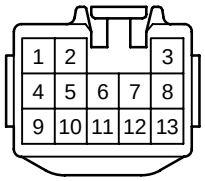
90980–10324	90980–10480	90980–10805
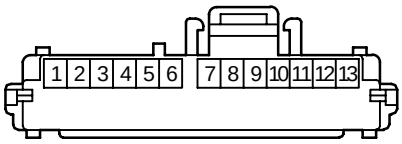	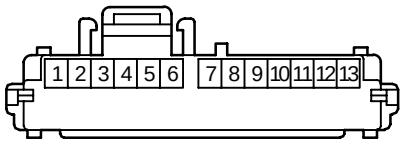	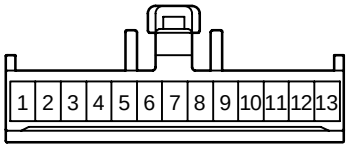
90980–11114	90980–11115	90980–11199
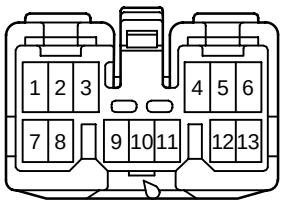	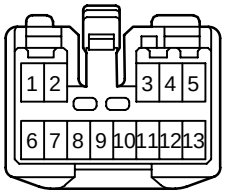	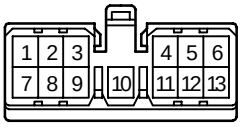
90980–11350	90980–11394	90980–11478

<FEMALE> 13P Non–waterproof Type

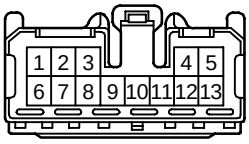	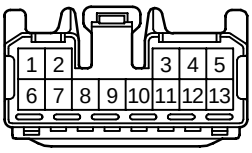	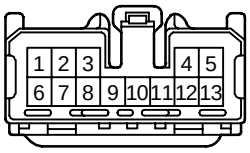
90980–11542	90980–11604	90980–11695
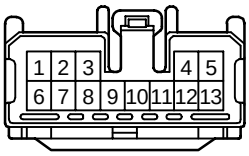	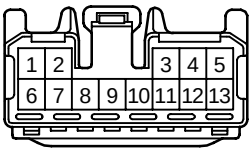	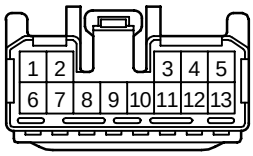
90980–11714	90980–11827	90980–11848
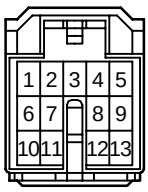	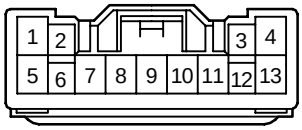	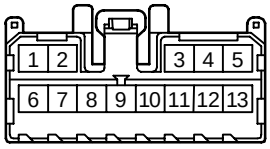
90980–11952	90980–12007	90980–12027

<FEMALE> 14P Non–waterproof Type

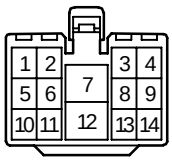

90980–10330

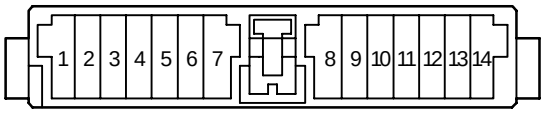

90980–10368

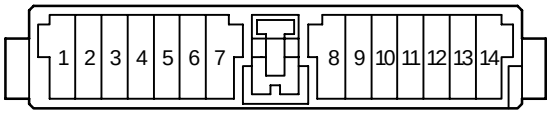

90980–10369

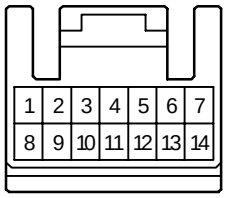

90980–10371

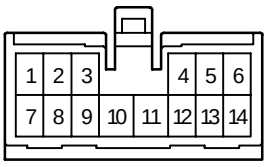

90980–10471

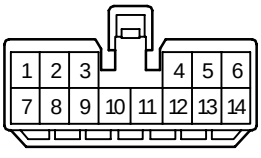

90980–10507

<FEMALE> 14P Non–waterproof Type

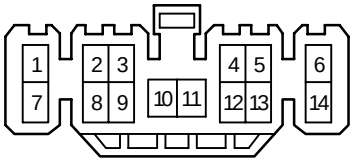

90980–10538

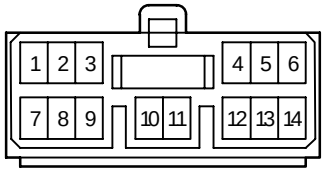

90980–10608

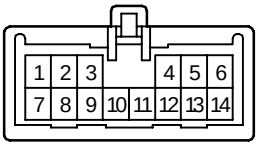

90980–10633

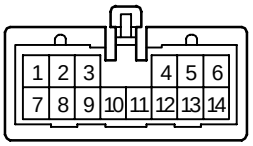

90980–10634

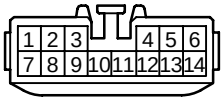

90980–10807
90980–11437

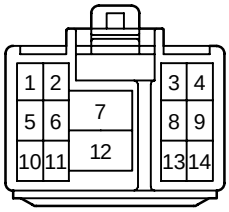

90980–10813

<FEMALE> 14P Non–waterproof Type

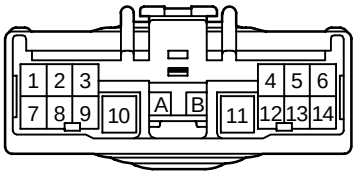

90980–10852

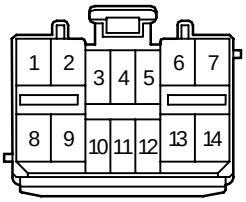

90980–11225

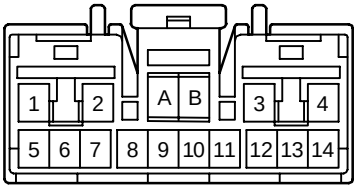

90980–11383

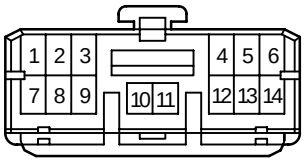

90980–11433

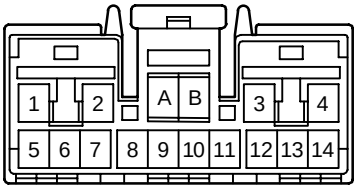

90980–11465

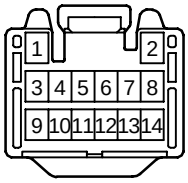

90980–11511

<FEMALE> 14P Non–waterproof Type

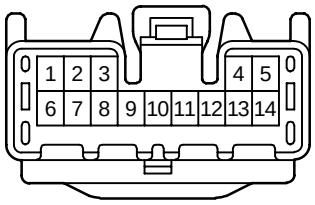

90980–11556

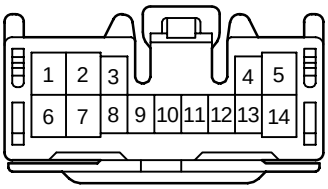

90980–11591

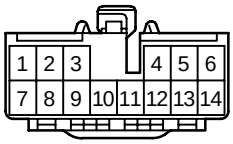

90980–11791

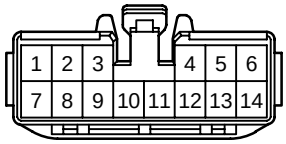

90980–11805

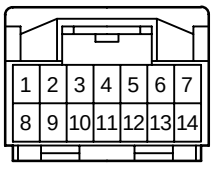

90980–11911

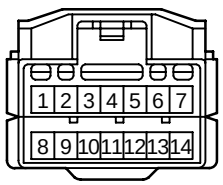

90980–11925

<FEMALE> 14P Non–waterproof Type

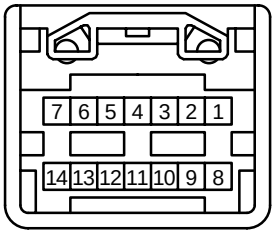

90980–12082

<FEMALE> 15P Non–waterproof Type

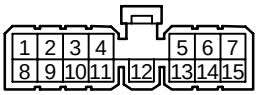

90980–10066

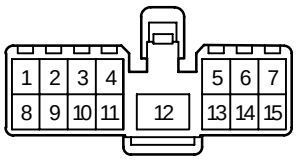

90980–10331

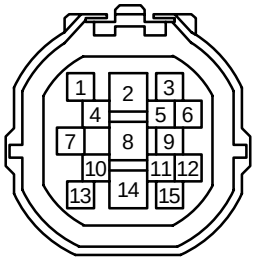

90980–10443

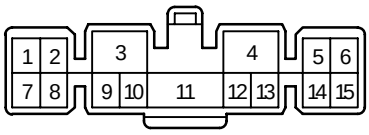

90980–10563

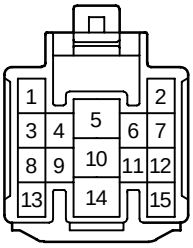

90980–10815

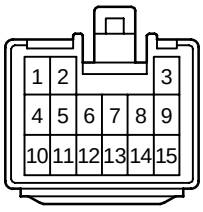

90980–10828

<FEMALE> 15P Non–waterproof Type

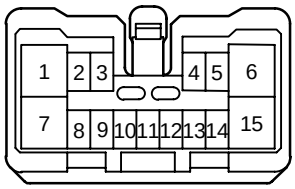

90980–11042

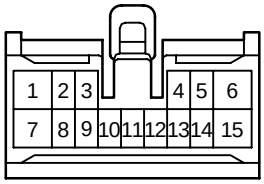

90980–11056

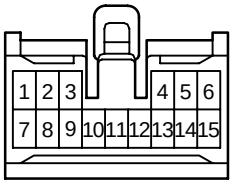

90980–11179

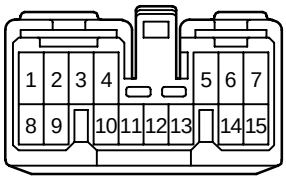

90980–11264

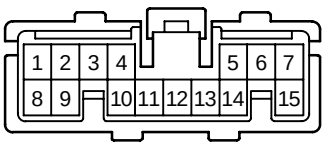

90980–11372

<FEMALE> 16P Non–waterproof Type

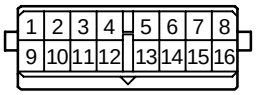

90980–10008

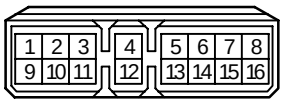

90980–10028

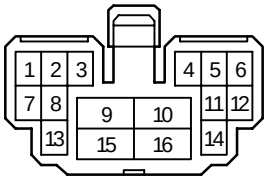

90980–10454

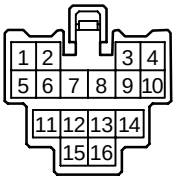

90980–10486

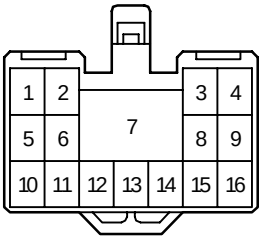

90980–10522

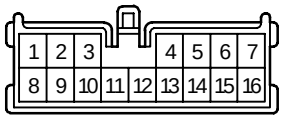

90980–10525

<FEMALE> 16P Non–waterproof Type

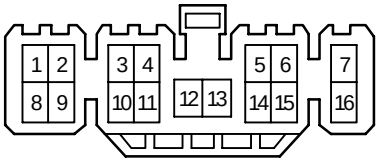

90980–10539

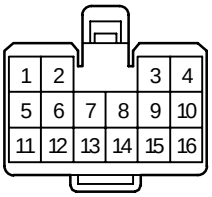

90980–10543

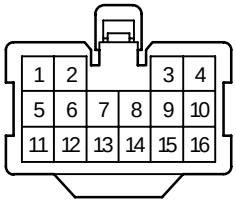

90980–10561

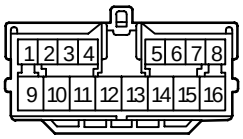

90980–10611

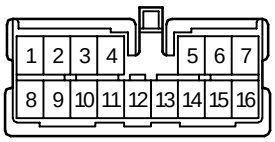

90980–10613

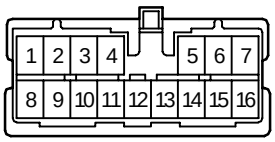

90980–10614

<FEMALE> 16P Non–waterproof Type

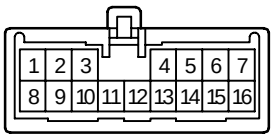

90980–10635

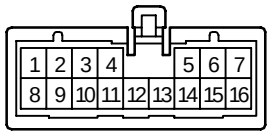

90980–10636

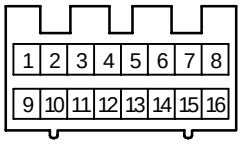

90980–10740

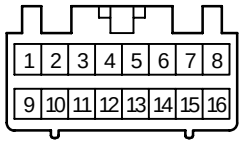

90980–10764

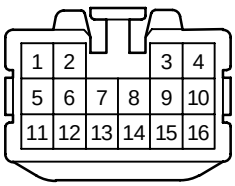

90980–10809
90980–11445

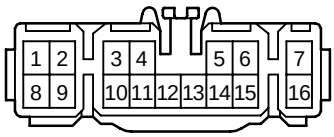

90980–10848

<FEMALE> 16P Non–waterproof Type

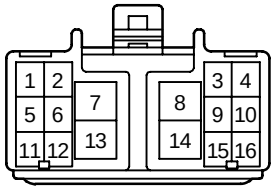

90980–10885

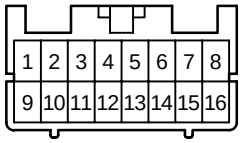

90980–11082

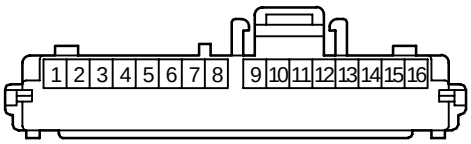

90980–11113

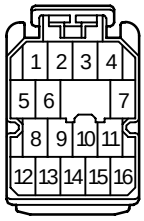

90980–11219

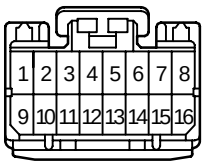

90980–11391

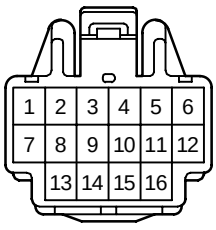

90980–11416

<FEMALE> 16P Non–waterproof Type

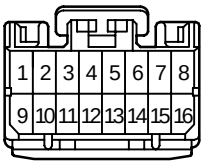

90980–11425

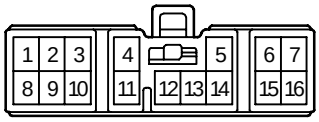

90980–11435

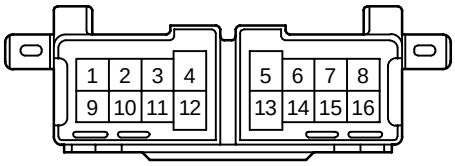

90980–11547

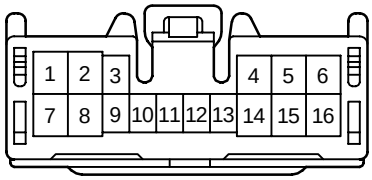

90980–11562

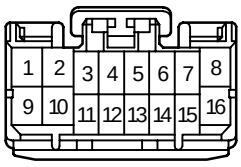

90980–11565

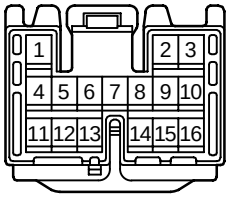

90980–11574

<FEMALE> 16P Non–waterproof Type

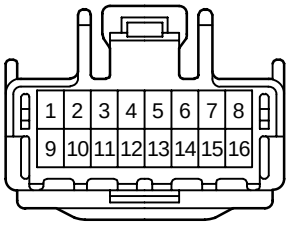

90980–11648

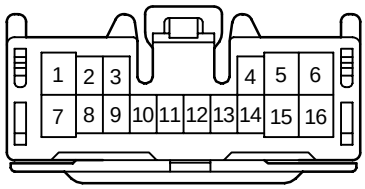

90980–11652

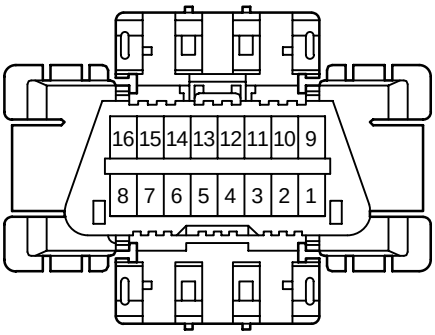

90980–11665
90980–11978

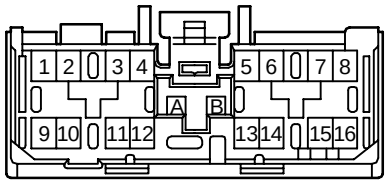

90980–11681

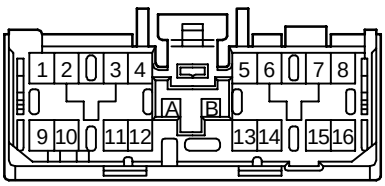

90980–11683

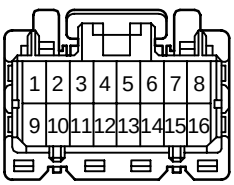

90980–11787

<FEMALE> 16P Non–waterproof Type

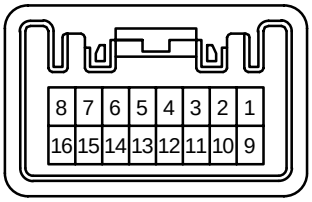

90980–12093

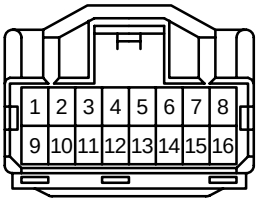

90980–12094

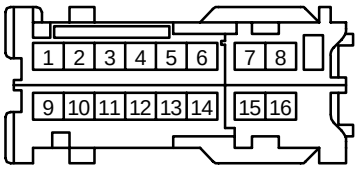

90980–12101

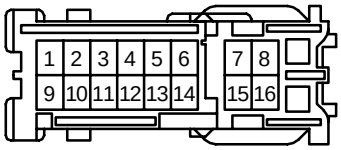

90980–12104

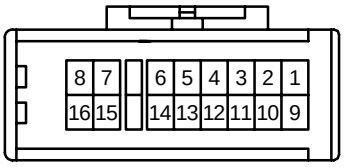

90980–12105

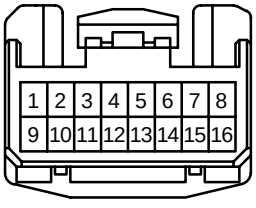

90980–12155

<FEMALE> 16P Non–waterproof Type

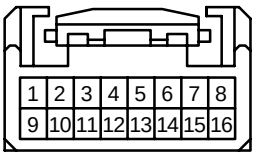

90980–12156

<FEMALE> 17P Non–waterproof Type

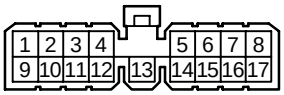

90980–10031

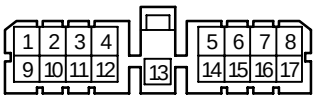

90980–10037

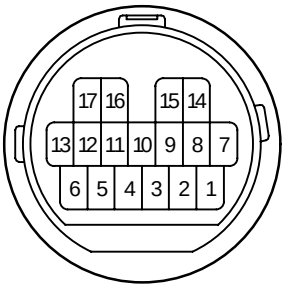

90980–10731
90980–11417
90980–11420

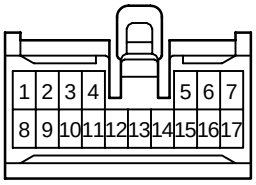

90980–11203

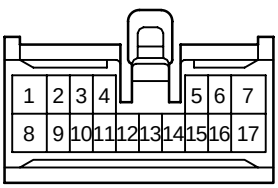

90980–11310

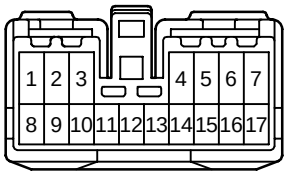

90980–11335

<FEMALE> 17P Non–waterproof Type

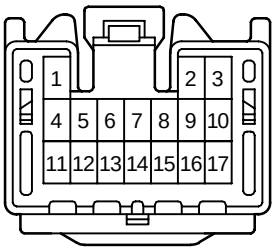

90980–11506

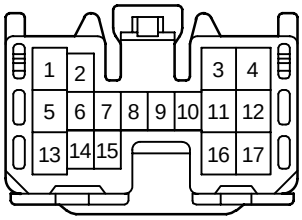

90980–11560

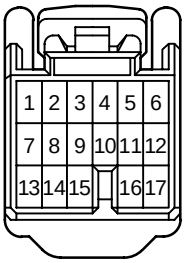

90980–11586

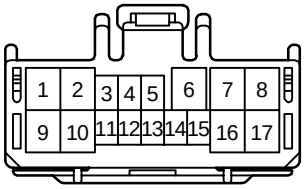

90980–11671

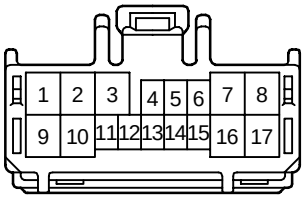

90980–11672

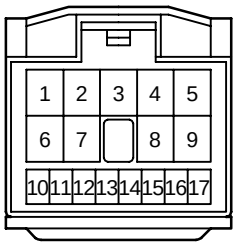

90980–11954

<FEMALE> 18P Non–waterproof Type

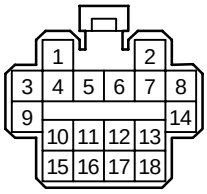

90980–10285

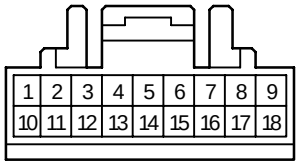

90980–10295

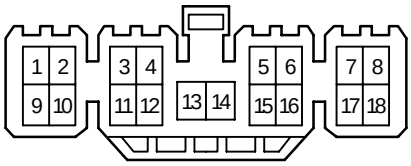

90980–10326

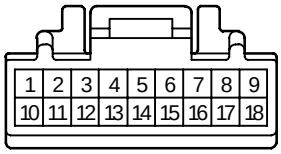

90980–10350

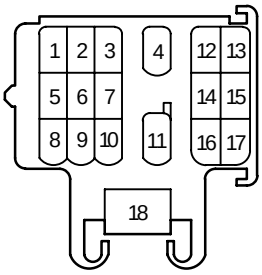

90980–10530

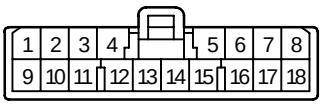

90980–10656

<FEMALE> 18P Non–waterproof Type

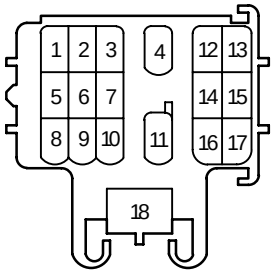

90980–10778

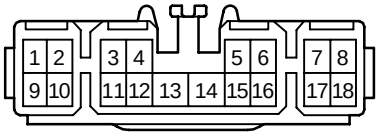

90980–10819

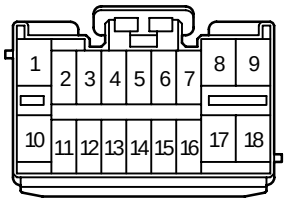

90980–11224

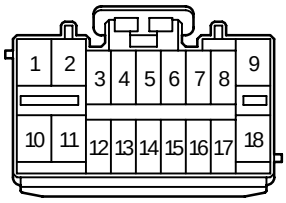

90980–11226

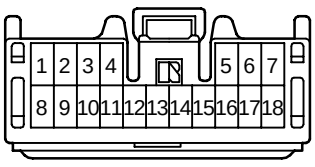

90980–11497

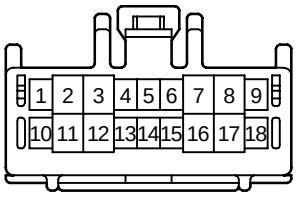

90980–11594

<FEMALE> 18P Non–waterproof Type

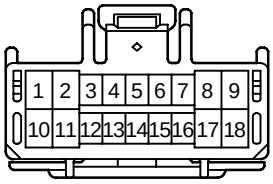

90980–11595

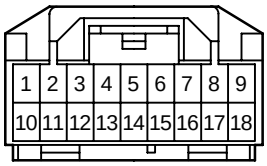

90980–11913

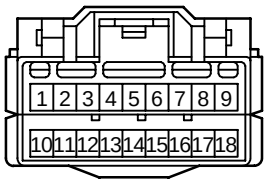

90980–11914

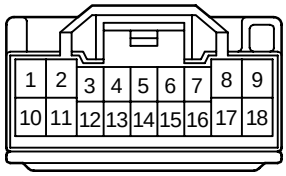

90980–11973

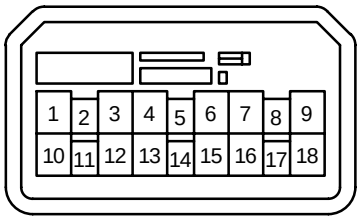

90980–12122

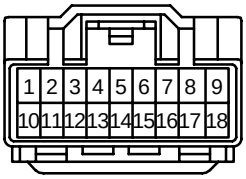

90980–12174

<FEMALE> 19P Non–waterproof Type

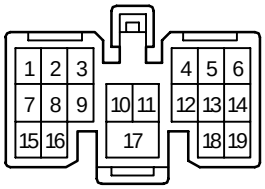

90980–10675

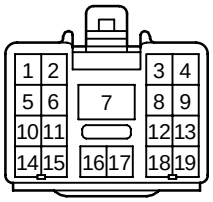

90980–10857

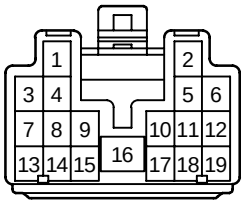

90980–10883

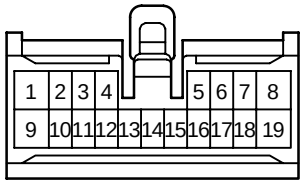

90980–11205

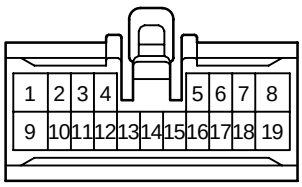

90980–11308

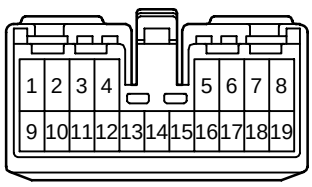

90980–11377

<FEMALE> 19P Non–waterproof Type

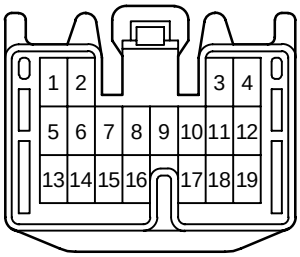

90980–11571

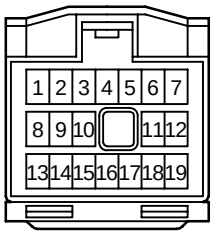

90980–11955

<FEMALE> 20P Non–waterproof Type

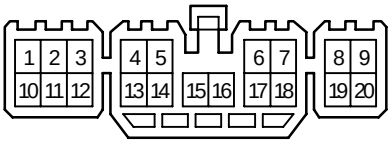

90980–10327

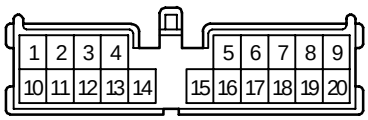

90980–10589

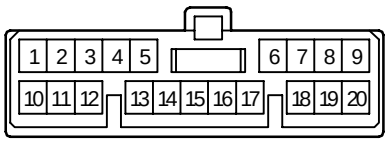

90980–10607

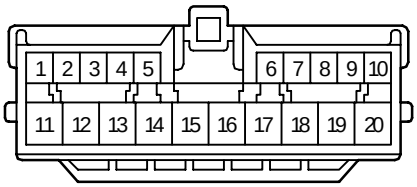

90980–10612

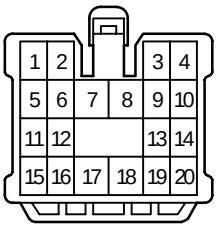

90980–10640

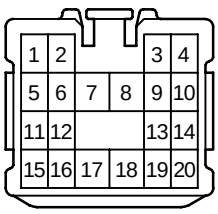

90980–10811
90980–11441

<FEMALE> 20P Non–waterproof Type

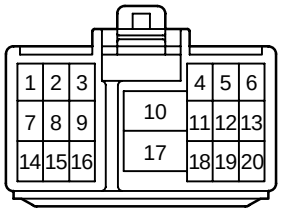

90980–10817

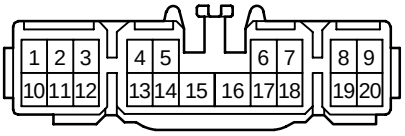

90980–10821

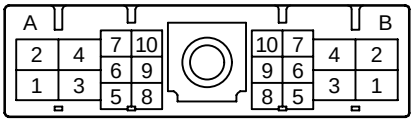

90980–10952

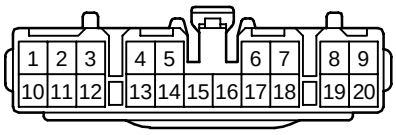

90980–11260

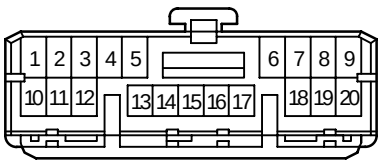

90980–11432

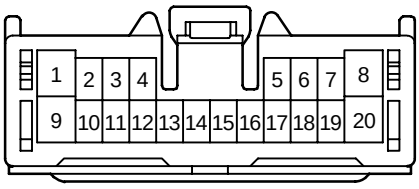

90980–11469

<FEMALE> 20P Non–waterproof Type

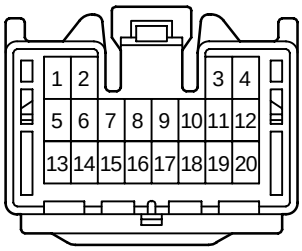

90980–11499

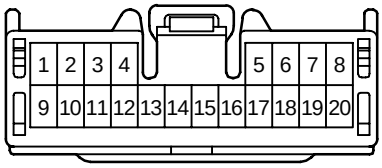

90980–11558

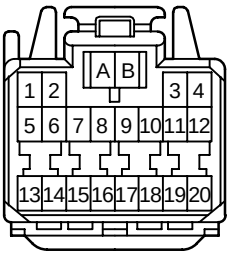

90980–11868

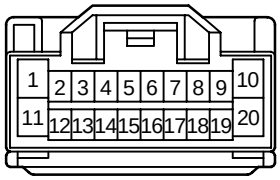

90980–11971

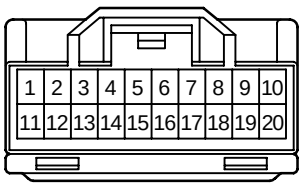

90980–11974

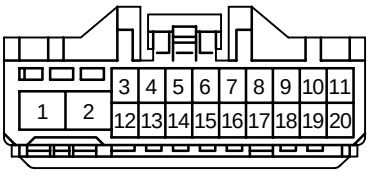

90980–12034

<FEMALE> 20P Non–waterproof Type

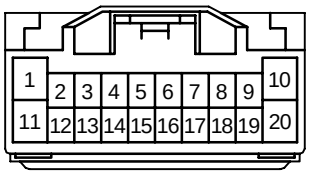

90980–12038

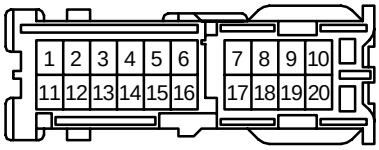

90980–12106

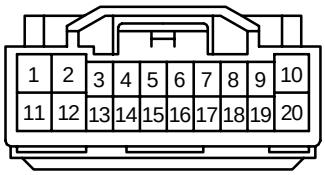

90980–12166

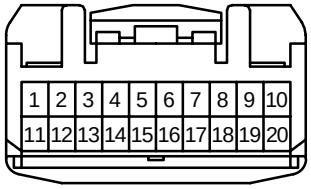

90980–12259

<FEMALE> 21P Non–waterproof Type

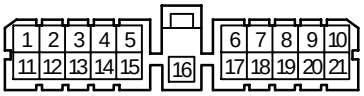

90980–10064

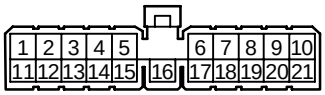

90980–10207

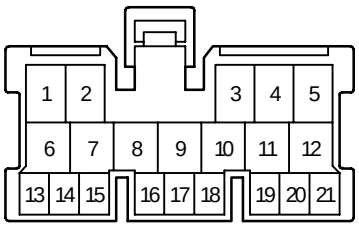

90980–10473

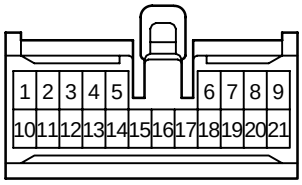

90980–11125

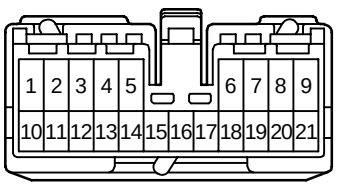

90980–11379

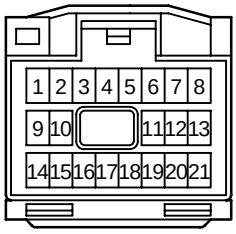

90980–11956

<FEMALE> 21P Non–waterproof Type

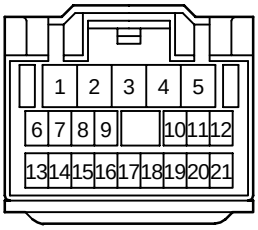

90980–11957

<FEMALE> 22P Non–waterproof Type

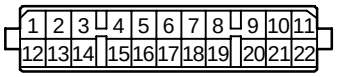

90980–10010

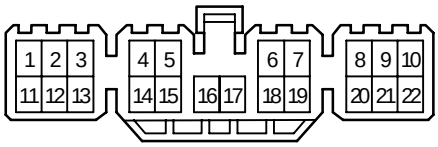

90980–10328

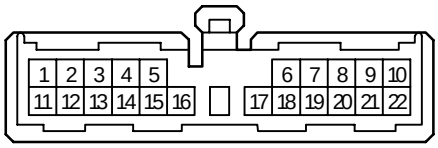

90980–10456

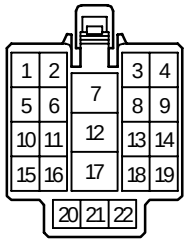

90980–10458

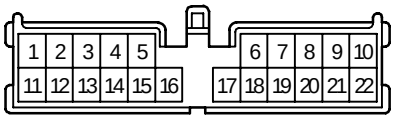

90980–10526

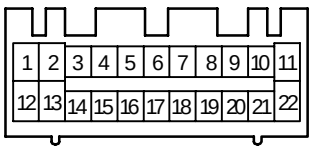

90980–10741

<FEMALE> 22P Non–waterproof Type

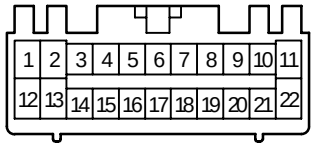

90980–10765

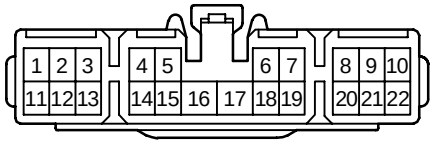

90980–10875

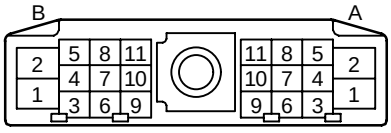

90980–10953

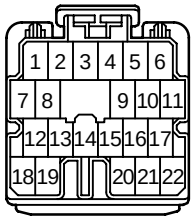

90980–11220

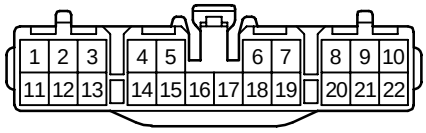

90980–11238

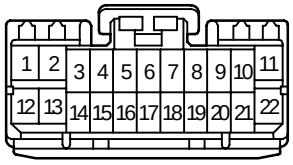

90980–11392

<FEMALE> 22P Non–waterproof Type

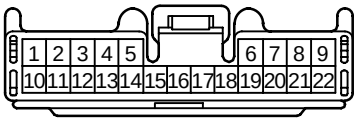

90980–11502

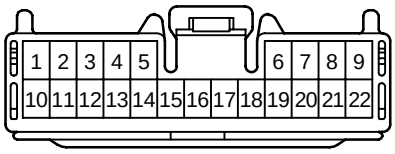

90980–11628

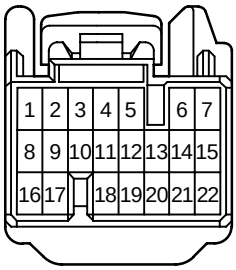

90980–11638

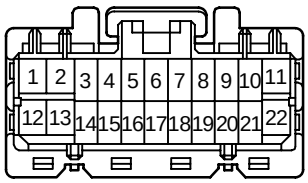

90980–11788

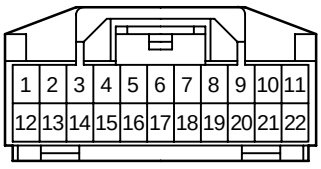

90980–11915

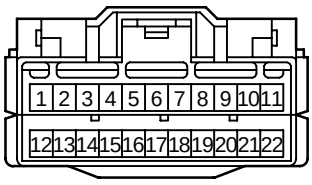

90980–11927

<FEMALE> 23P Non–waterproof Type

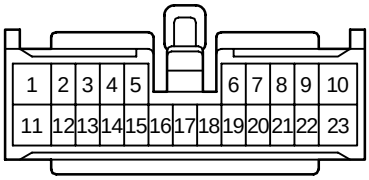

90980–10921

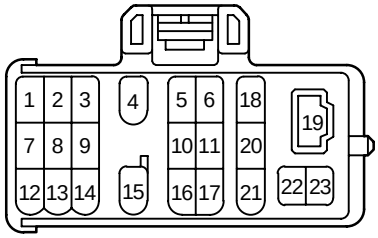

90980–11195

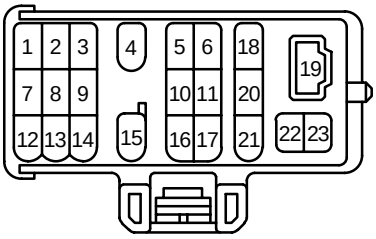

90980–11323

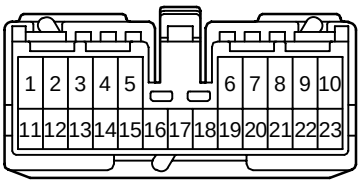

90980–11381

<FEMALE> 24P Non–waterproof Type

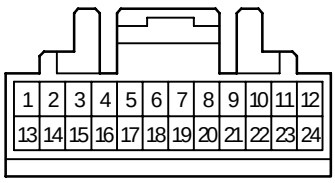

90980–10296

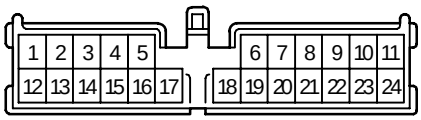

90980–10585

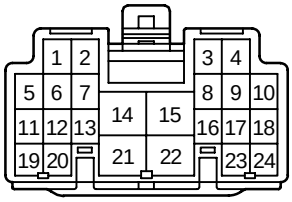

90980–10881

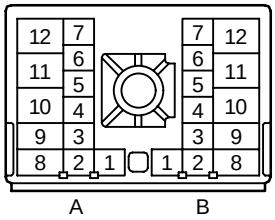

90980–10955

<FEMALE> 24P Non–waterproof Type

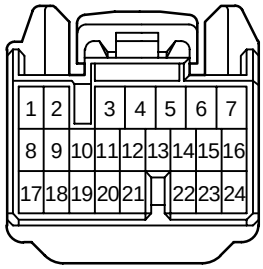

90980–11476

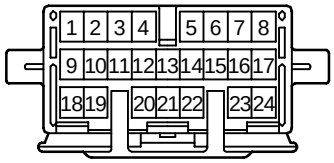

90980–11509

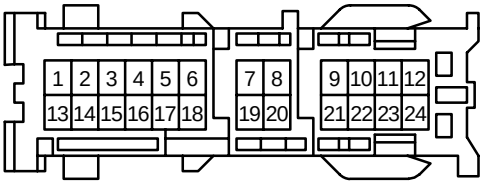

90980–12070

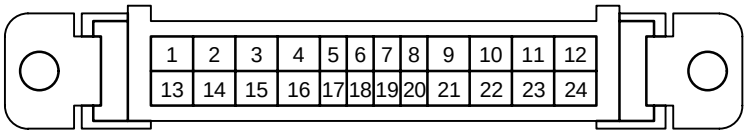

90980–12079

<FEMALE> 24P Non–waterproof Type

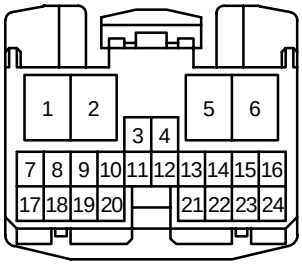

90980–12149

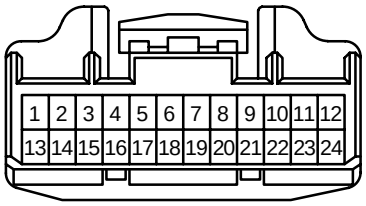

90980–12200

<FEMALE> 25P Non–waterproof Type

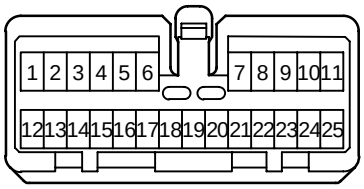

90980–11043

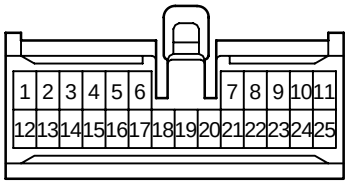

90980–11055

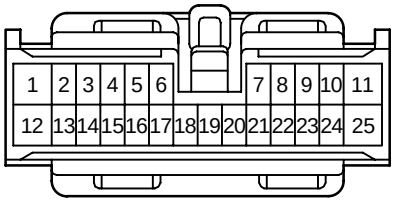

90980–11058

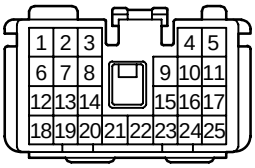

90980–11375

<FEMALE> 25P Non–waterproof Type

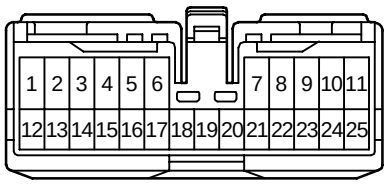

90980–11404

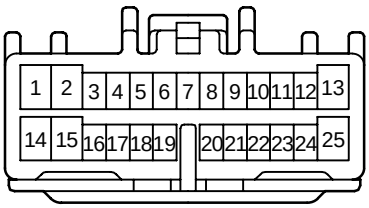

90980–11877

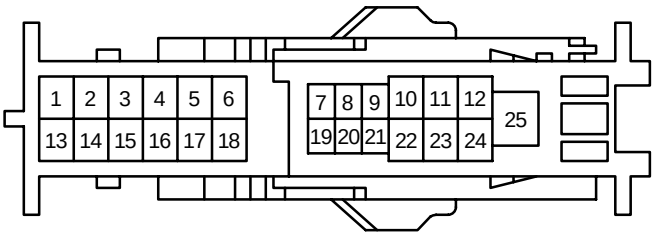

90980–12278

<FEMALE> 26P Non–waterproof Type

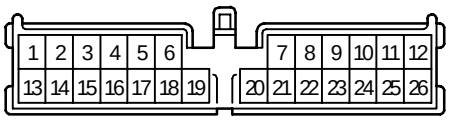

90980–10587

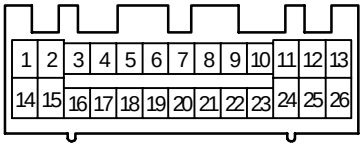

90980–10739

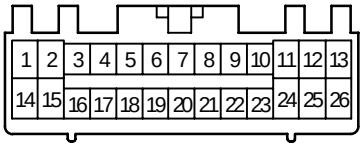

90980–10763

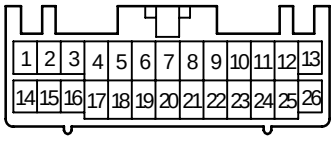

90980–10918

<FEMALE> 26P Non–waterproof Type

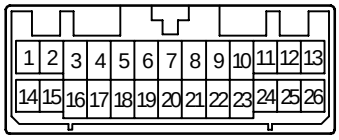

90980–10925

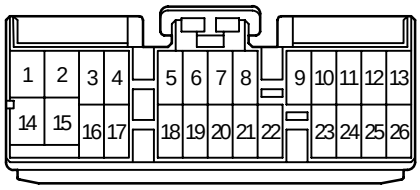

90980–11234

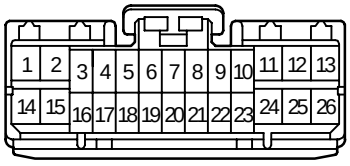

90980–11390

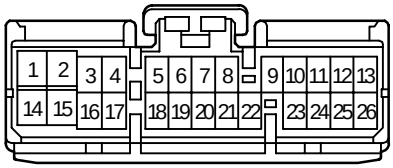

90980–11406

<FEMALE> 26P Non–waterproof Type

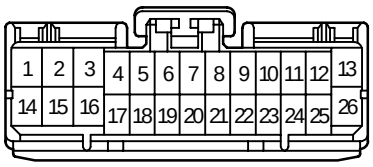

90980–11422

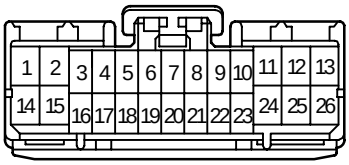

90980–11423

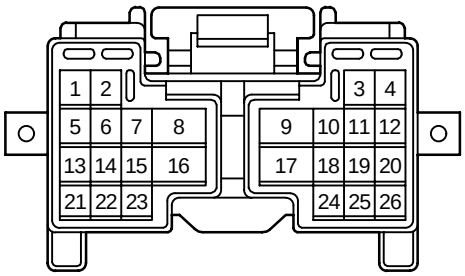

90980–11611

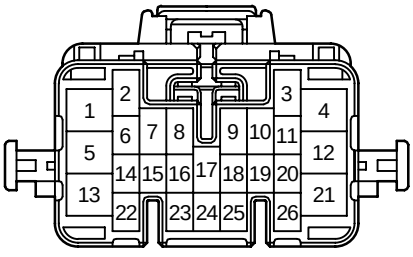

90980–11632

<FEMALE> 26P Non–waterproof Type

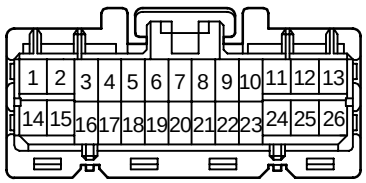

90980–11786

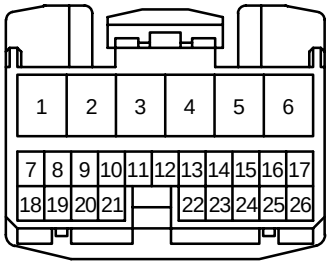

90980–12150

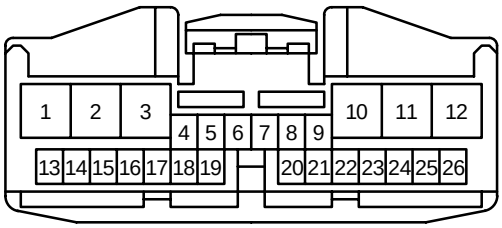

90980–12203

<FEMALE> 27P Non–waterproof Type

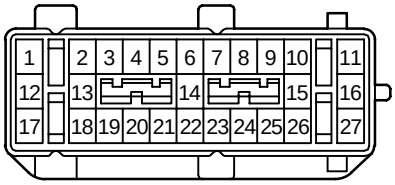

90980–11670

<FEMALE> 28P Non–waterproof Type

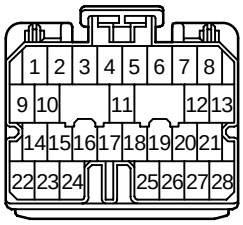

90980–11218

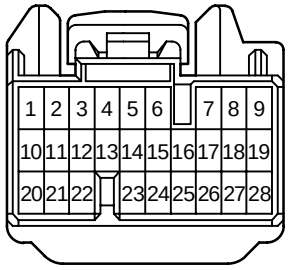

90980–11637

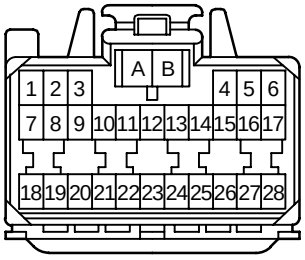

90980–11872

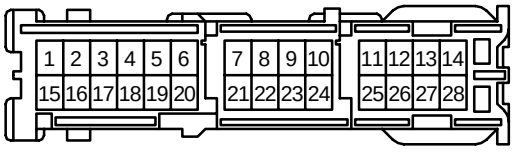

90980–12102

<FEMALE> 30P Non–waterproof Type

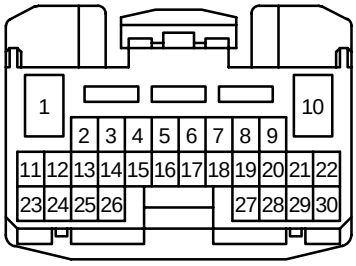

90980–12151

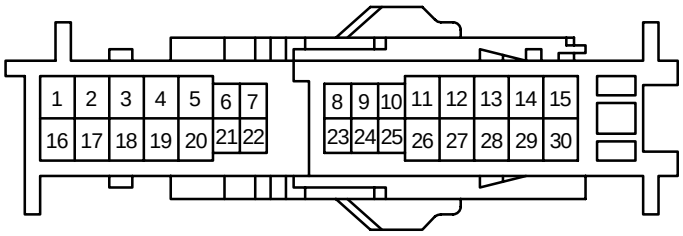

90980–12277

<FEMALE> 31P Non–waterproof Type

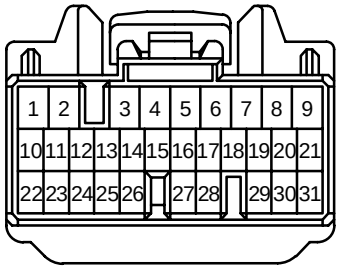

90980–11421

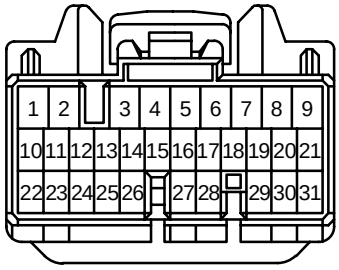

90980–11935

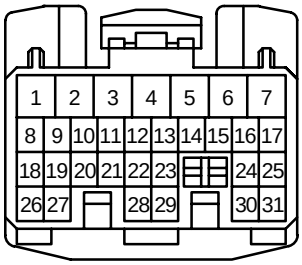

90980–12142

<FEMALE> 32P Non–waterproof Type

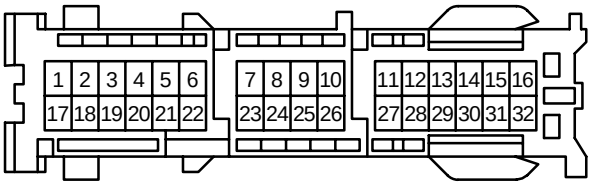

90980–12071

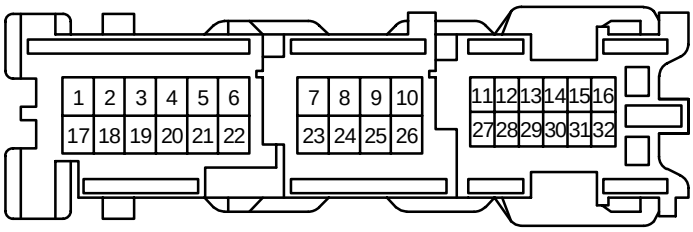

90980–12096

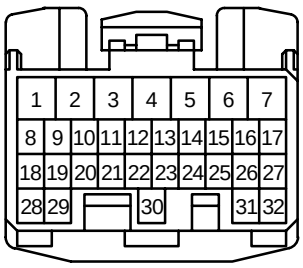

90980–12143

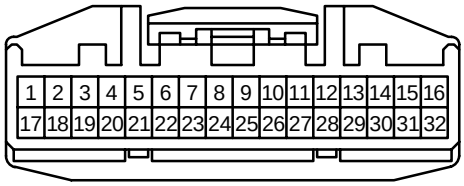

90980–12153

<FEMALE> 32P Non–waterproof Type

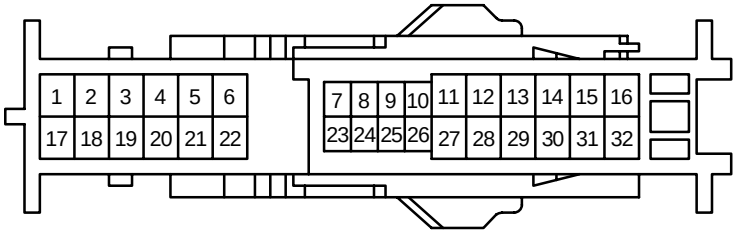

90980–12275

<FEMALE> 34P Non–waterproof Type

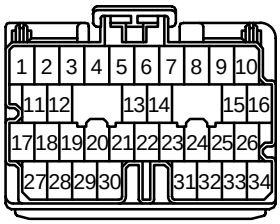

90980–11221

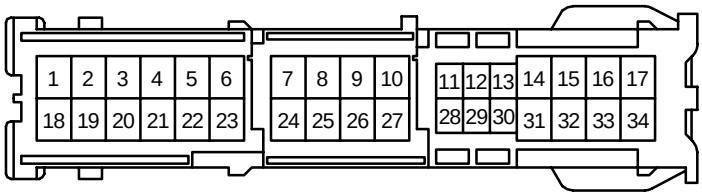

90980–12114

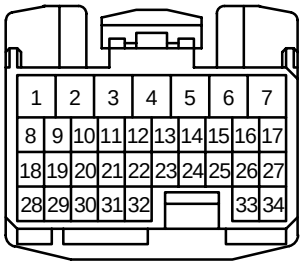

90980–12144

<FEMALE> 35P, 36P Non–waterproof Type

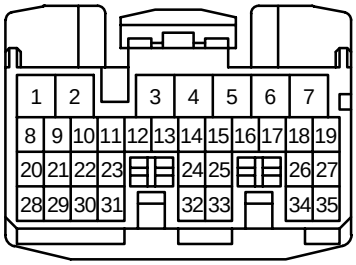

90980–12145

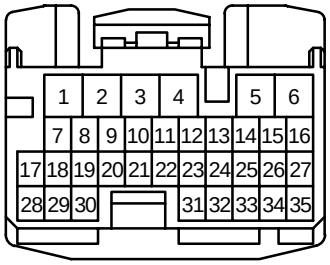

90980–12146

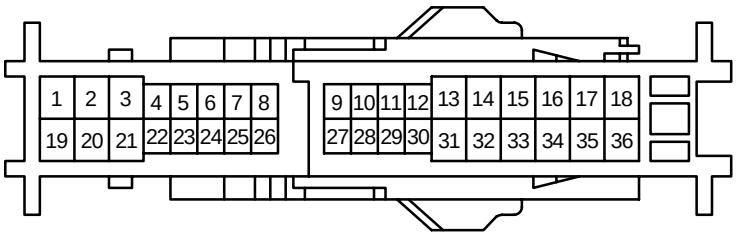

90980–12274

<FEMALE> 38P Non–waterproof Type

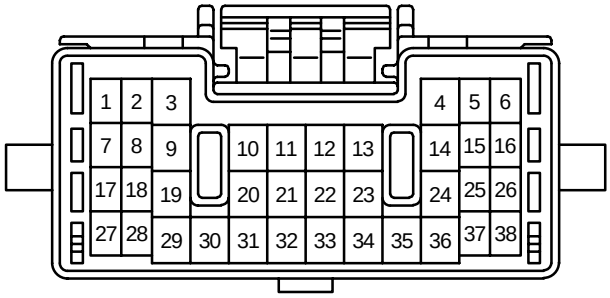

90980–11555

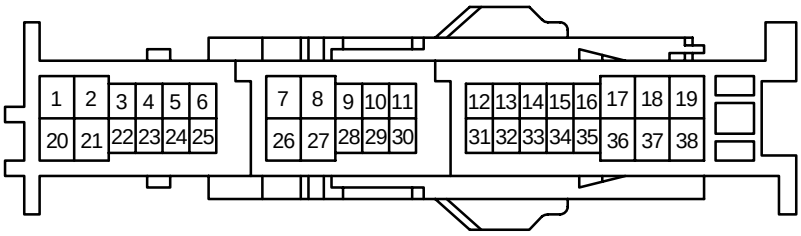

90980–12276

<FEMALE> 40P Non–waterproof Type

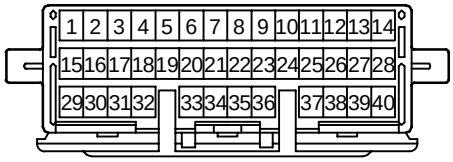

90980–11508

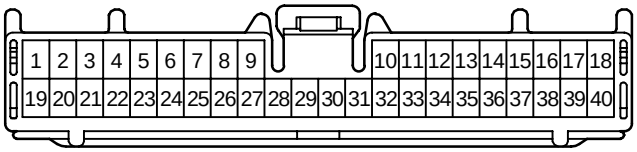

90980–11618

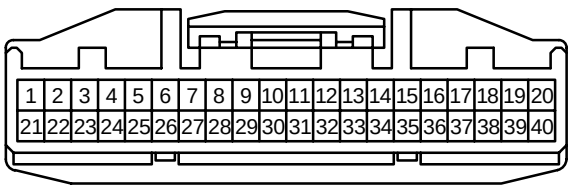

90980–12169

<FEMALE> 40P Non–waterproof Type

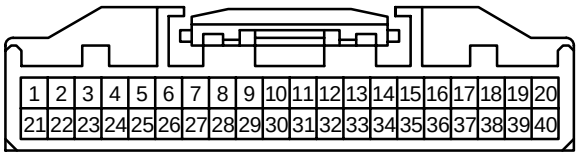

90980–12170

<FEMALE> 42P, 43P, 46P Non–waterproof Type

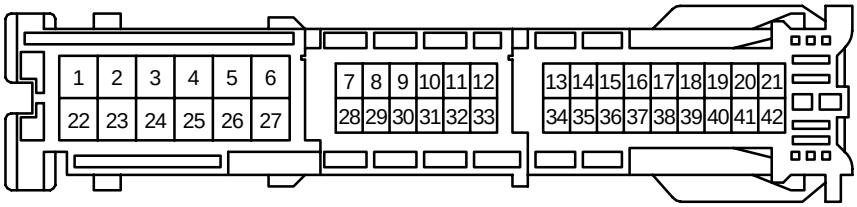

90980–12184

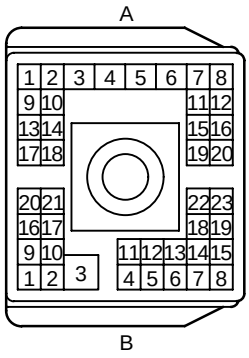

90980–11360

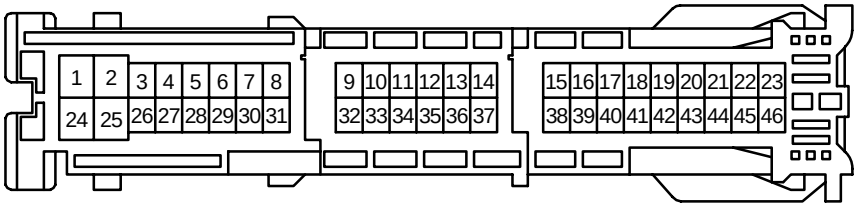

90980–12179

<FEMALE> 49P, 55P, 83P Non–waterproof Type

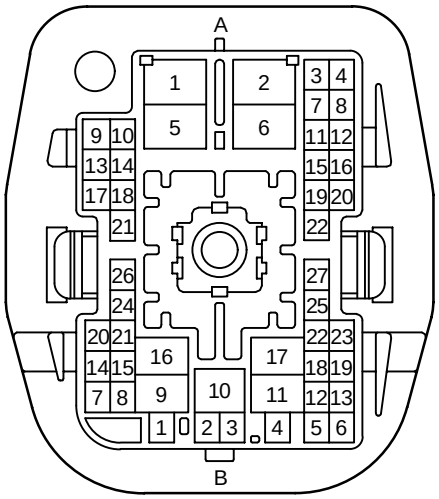

90980–11431

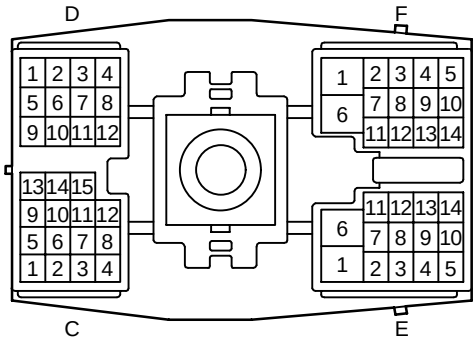

90980–11359

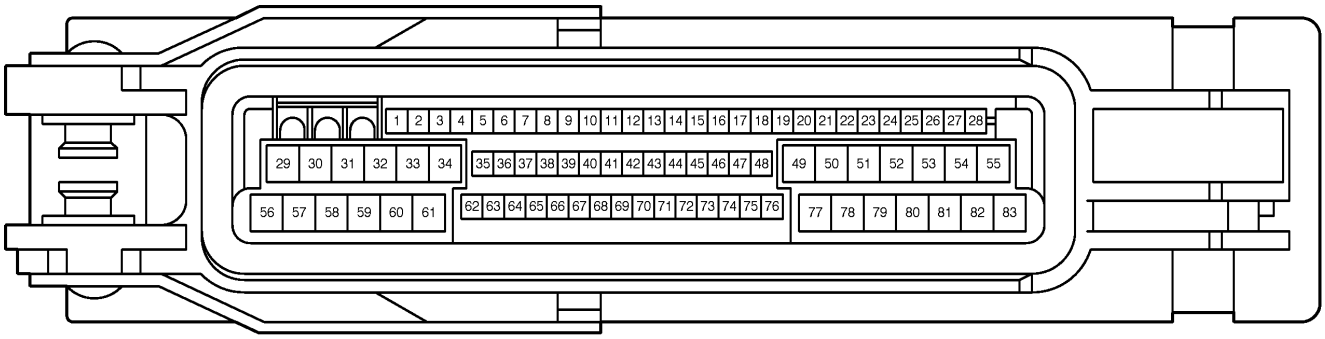

90980–11906

<FEMALE> 88P Non–waterproof Type

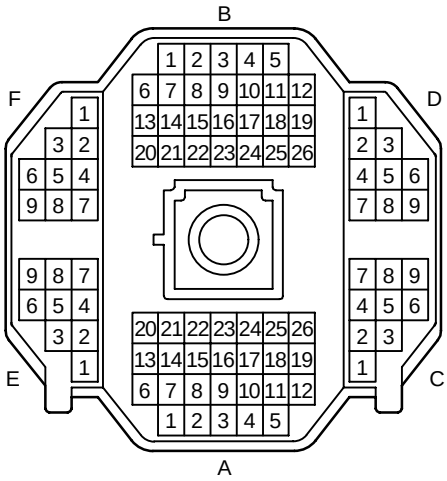

90980–10950

<MALE> 1P Waterproof Type

 90980–10114	 90980–10125	 90980–10200	 90980–10240
 90980–10246	 90980–10438	 90980–10836	 90980–10892
 90980–10982	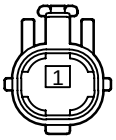 90980–11006	 90980–11183	 90980–11270
 90980–11962			

<MALE> 2P Waterproof Type

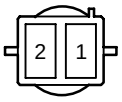 90980–10091	 90980–10122	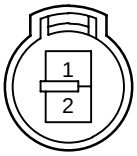 90980–10156 90980–10412	 90980–10192
 90980–10242	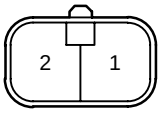 90980–10374	 90980–10495	 90980–10497
 90980–10533	 90980–10555 90980–10707	 90980–10566	 90980–10571
 90980–10575	 90980–10580	 90980–10582	 90980–10592
 90980–10594	 90980–10625 90980–10788	 90980–10665	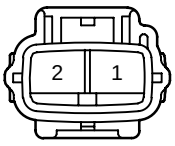 90980–10838

<MALE> 2P Waterproof Type

			
90980–10842	90980–10886	90980–10898	90980–10900
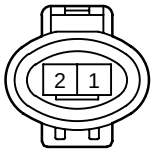			
90980–10927	90980–10948	90980–10959	90980–10970
	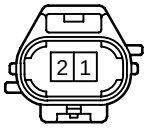		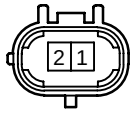
90980–11002	90980–11004	90980–11008	90980–11029
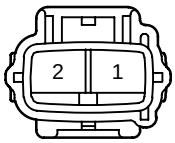	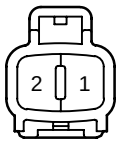		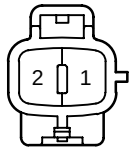
90980–11031	90980–11050	90980–11069	90980–11072
			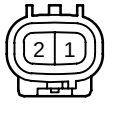
90980–11073 90980–11074	90980–11137	90980–11141	90980–11155

<MALE> 2P Waterproof Type

	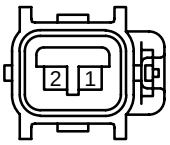		
90980–11168	90980–11175	90980–11188	90980–11236
			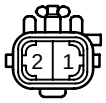
90980–11247	90980–11249	90980–11254	90980–11272
	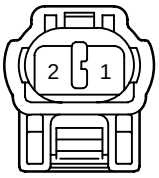		
90980–11303	90980–11322	90980–11409	90980–11447
		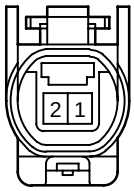	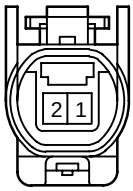
90980–11466	90980–11486	90980–11789	90980–11854
	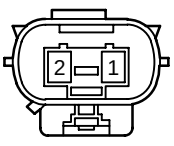	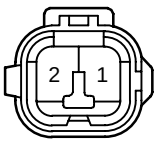	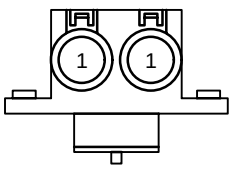
90980–11863	90980–11865	90980–11901	90980–11945

<MALE> 2P Waterproof Type

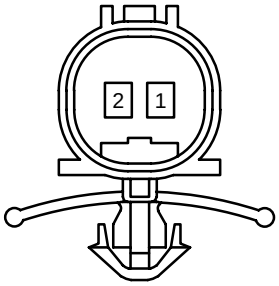 90980–12194			

<MALE> 3P Waterproof Type

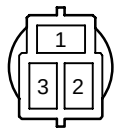 90980–10093	 90980–10190	 90980–10235	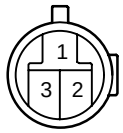 90980–10244
 90980–10248 90980–10347	 90980–10394 90980–10444	 90980–10492 90980–10493 90980–10774 90980–10787	 90980–10500
 90980–10553 90980–10577 90980–10777	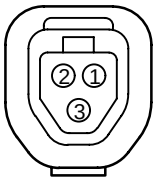 90980–10682	 90980–10689	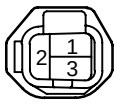 90980–10698
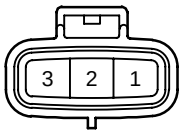 90980–10840	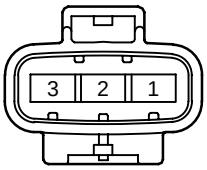 90980–10944	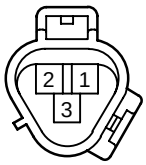 90980–11015	 90980–11044
 90980–11131	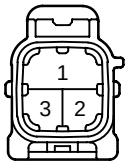 90980–11160	 90980–11169	 90980–11244 90980–11295 90980–11407

<MALE> 3P Waterproof Type

 90980–11293	 90980–11341	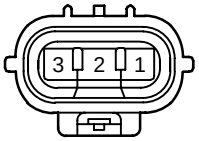 90980–11348	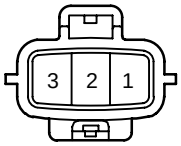 90980–11607
 90980–11622	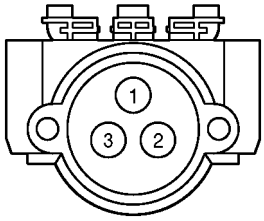 90980–12131		

<MALE> 4P Waterproof Type

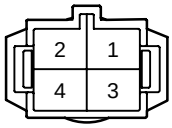	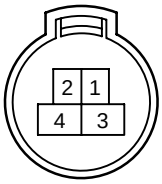	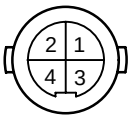	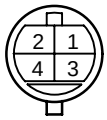
90980–10094	90980–10139	90980–10202	90980–10217
	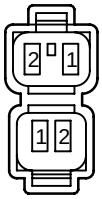		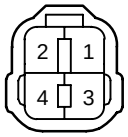
90980–10475	90980–10510 90980–11076	90980–10590	90980–10648
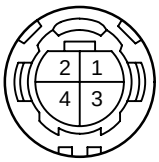			
90980–10662	90980–10749	90980–10751 90980–10768	90980–10868
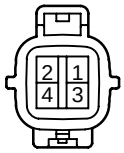		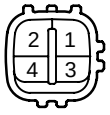	
90980–10941	90980–10989	90980–11027	90980–11035
	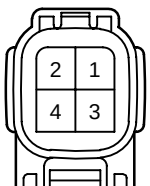	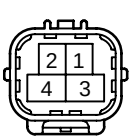	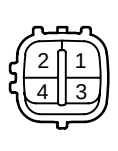
90980–11063 90980–11064	90980–11122	90980–11138	90980–11177

<MALE> 4P Waterproof Type

 90980–11262 90980–11328	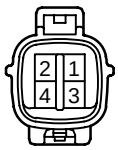 90980–11268	 90980–11287	 90980–11291
 90980–11929	 90980–12177		

<MALE> 5P Waterproof Type

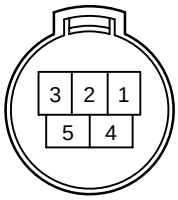 90980–10161	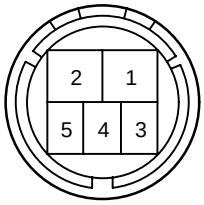 90980–10392	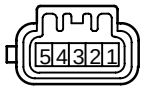 90980–10557 90980–10570	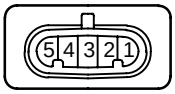 90980–10642
 90980–10709	 90980–10945	 90980–11021	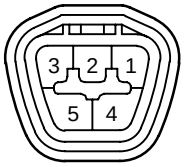 90980–11078
 90980–11181	 90980–11412	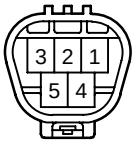 90980–11598	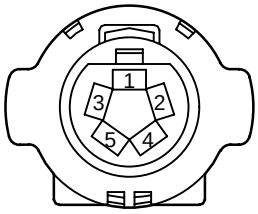 90980–11689

<MALE> 6P, 7P Waterproof Type

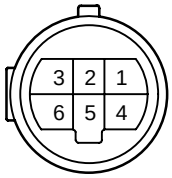		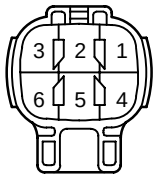	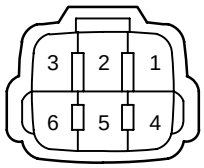
90980–10194	90980–10477	90980–10596	90980–10650 90980–10984
		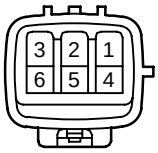	
90980–10987	90980–11033	90980–11193	90980–11196
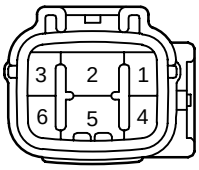		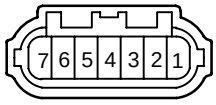	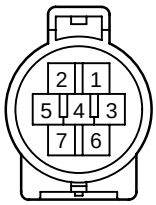
90980–11267	90980–11289	90980–10627	90980–10930
			
90980–11171			

<MALE> 8P, 9P Waterproof Type

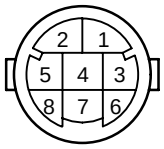	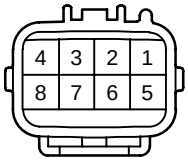	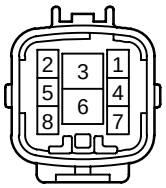
90980–10204	90980–10890	90980–10894
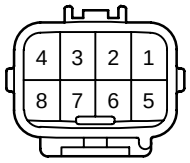		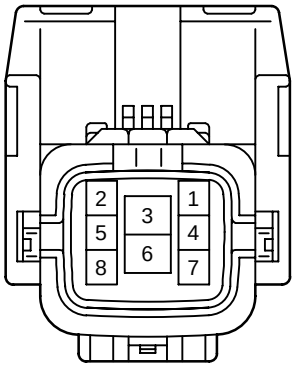
90980–10896	90980–11241	90980–11460
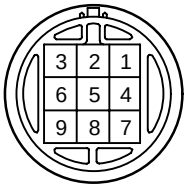	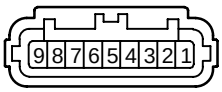	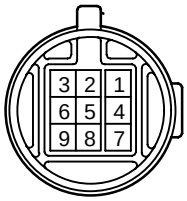
90980–10379	90980–10677	90980–10775
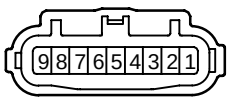	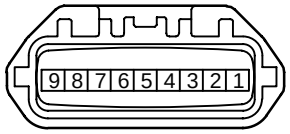	
90980–10826	90980–11191	

<MALE> 11P, 12P, 13P, 15P Waterproof Type

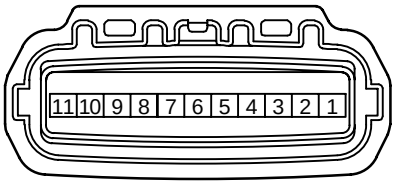	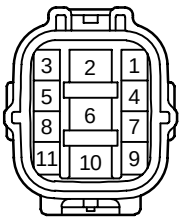	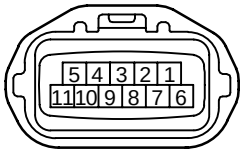
90980–11173	90980–11239	90980–11256
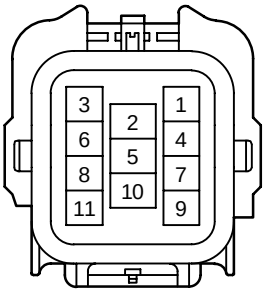	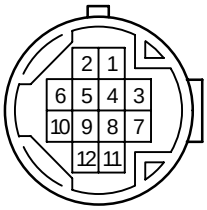	
90980–11609	90980–10568	90980–11086
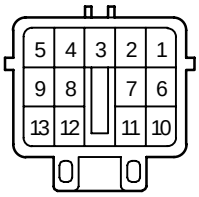	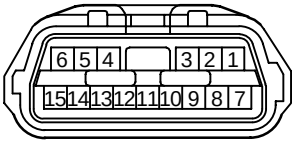	
90980–10653	90980–11088	

<MALE> 16P, 17P Waterproof Type

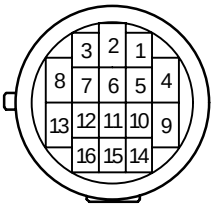

90980–10287

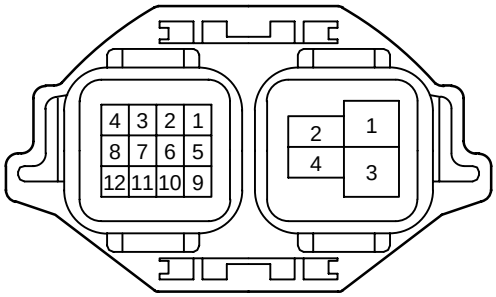

90980–10547

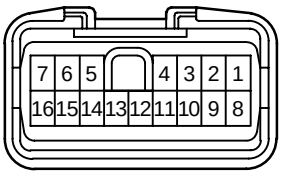

90980–11462

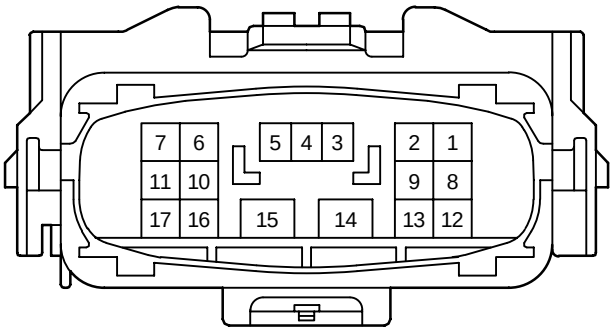

90980–11600

<MALE> 120P Waterproof Type

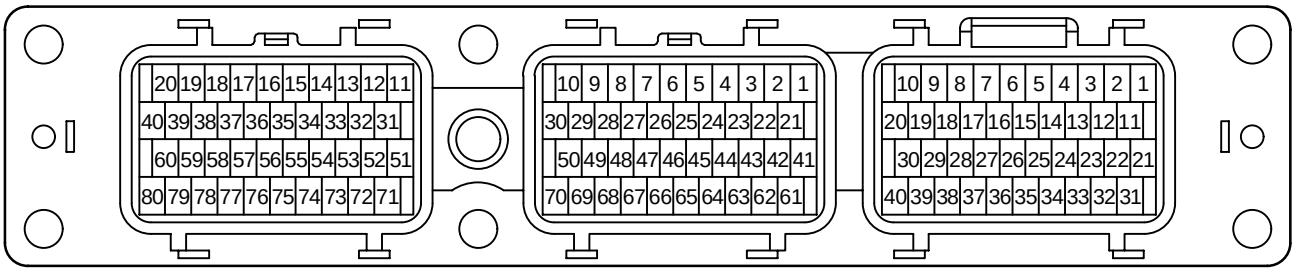

90980–11213

<MALE> 1P Non–waterproof Type

 90980–10160	 90980–10178	 90980–10182	 90980–10251
 90980–10253	 90980–10342	 90980–10396	 90980–10433 90980–10434
 90980–10870 90980–11026 90980–11097	 90980–10994	 90980–11146	 90980–11258
 90980–11737	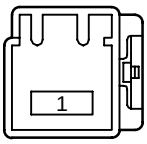 90980–11774	 90980–12041	

<MALE> 2P Non–waterproof Type

 90980–10011	 90980–10038	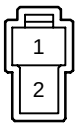 90980–10213 90980–10305	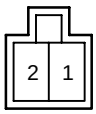 90980–10255
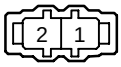 90980–10286	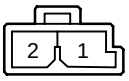 90980–10297	 90980–10344 90980–10346	 90980–10354 90980–10437
 90980–10356	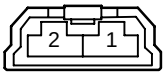 90980–10424	 90980–10620	 90980–10687
 90980–10824	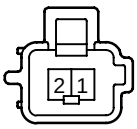 90980–10833 90980–11299	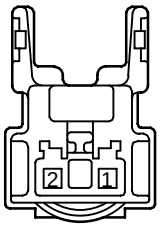 90980–10849	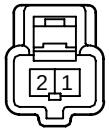 90980–10859
 90980–10905	 90980–10915	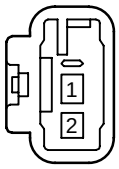 90980–10934	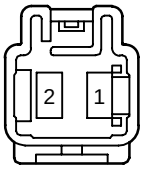 90980–10958

<MALE> 2P Non–waterproof Type

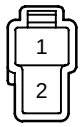 90980–11014	 90980–11060	 90980–11093	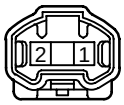 90980–11159
 90980–11211	 90980–11300	 90980–11305	 90980–11367
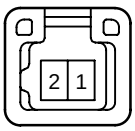 90980–11368	 90980–11395	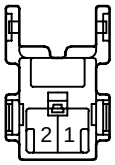 90980–11545	 90980–11589
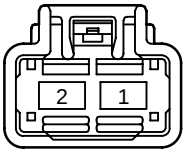 90980–11655	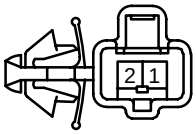 90980–11724	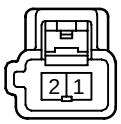 90980–11735	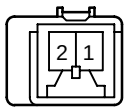 90980–11883
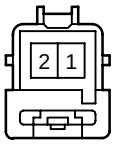 90980–11889	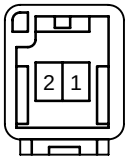 90980–11917	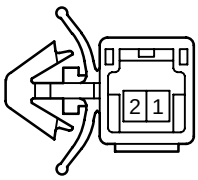 90980–11933	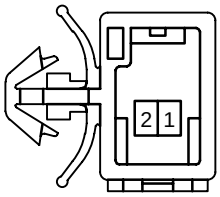 90980–11967

<MALE> 2P Non–waterproof Type

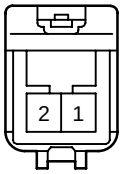 90980–11992	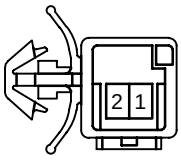 90980–12062		

<MALE> 3P Non–waterproof Type

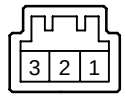 90980–10055 90980–10163	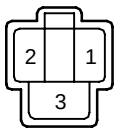 90980–10188	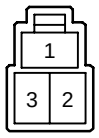 90980–10215 90980–10283 90980–10299	 90980–10231
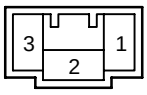 90980–10257 90980–10300 90980–10410	 90980–10364 90980–10573	 90980–10544	 90980–10907
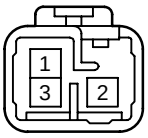 90980–10979	 90980–11052	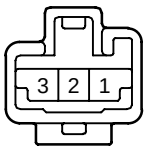 90980–11229	 90980–11298
 90980–11385	 90980–11470	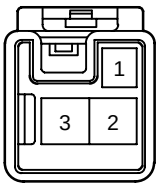 90980–11484	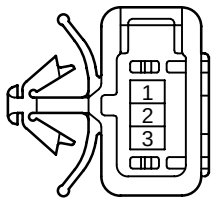 90980–11489
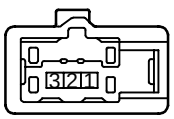 90980–11620	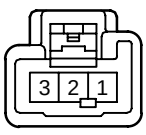 90980–11763	 90980–11874	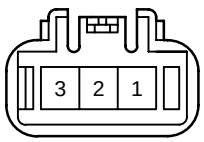 90980–11936

<MALE> 3P Non–waterproof Type

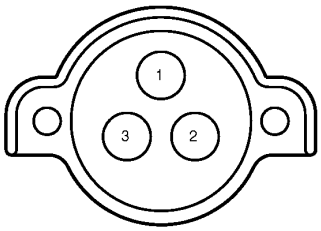	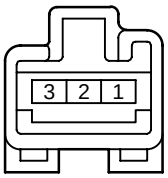	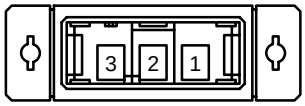	
90980–11937	90980–11994	90980–12196	

<MALE> 4P Non–waterproof Type

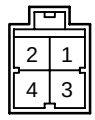	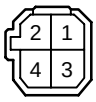	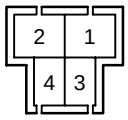	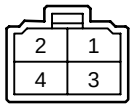
90980–10001	90980–10126	90980–10144	90980–10170
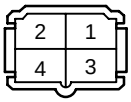	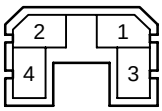	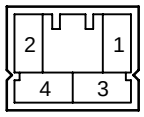	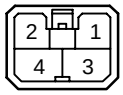
90980–10219	90980–10237	90980–10259	90980–10306
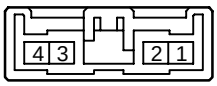			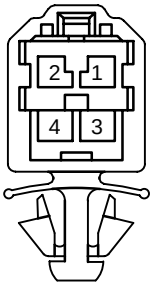
90980–10399	90980–10466	90980–10502	90980–10503
	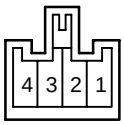	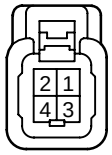	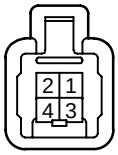
90980–10600	90980–10691	90980–10794	90980–10858
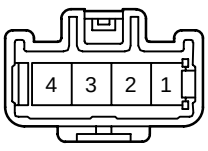	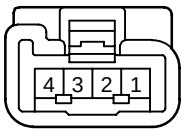	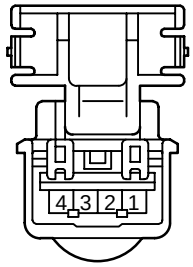	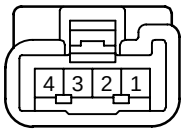
90980–10866	90980–11012	90980–11023	90980–11100

<MALE> 4P Non–waterproof Type

	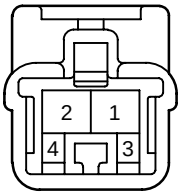	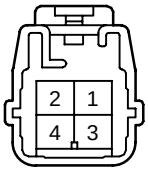	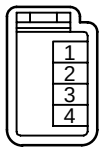
90980–11106	90980–11126	90980–11135	90980–11186
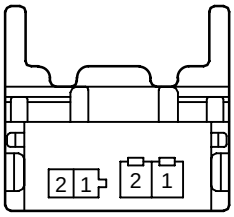		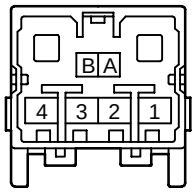	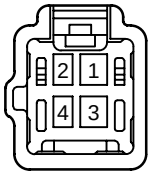
90980–11301	90980–11399	90980–11426	90980–11605
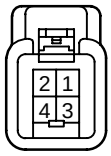	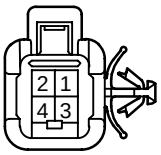	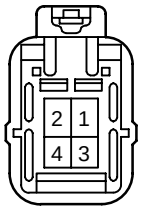	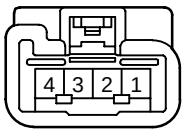
90980–11765	90980–11779	90980–11809	90980–11812
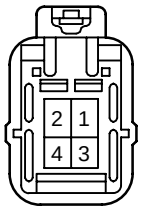	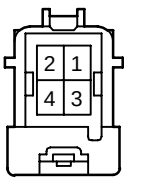		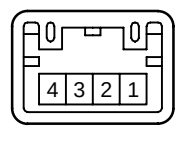
90980–11878	90980–11891	90980–11965	90980–11985
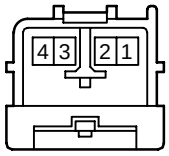	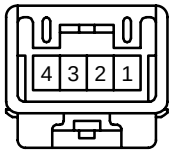	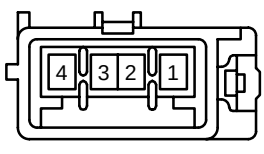	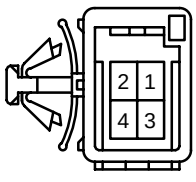
90980–12016	90980–12123	90980–12159	90980–12212

<MALE> 5P Non–waterproof Type

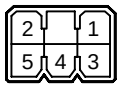	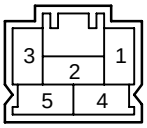	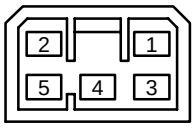	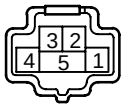
90980–10040	90980–10261	90980–10308	90980–10518
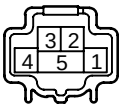	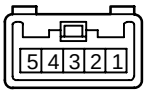	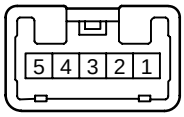	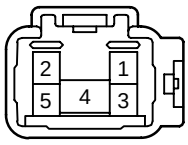
90980–10519	90980–10762	90980–10790	90980–10985
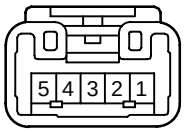	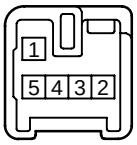	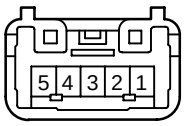	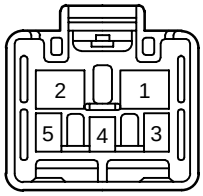
90980–11085	90980–11318	90980–11327	90980–11602
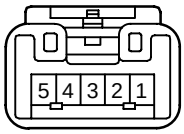	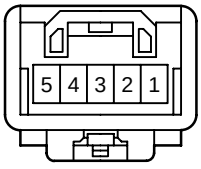	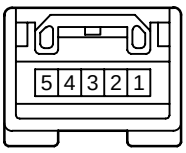	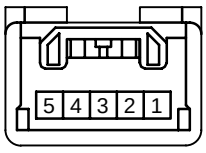
90980–11843	90980–11920	90980–11968	90980–12036
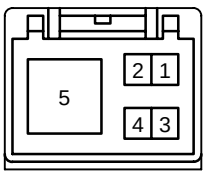	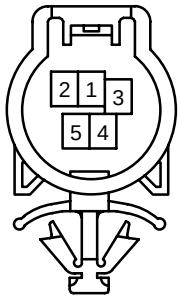		
90980–12050	90980–12189		

<MALE> 6P Non–waterproof Type

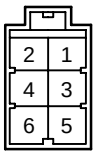	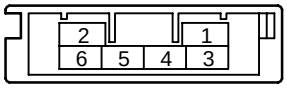	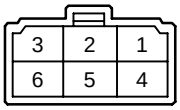	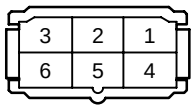
90980–10003	90980–10027	90980–10172	90980–10223
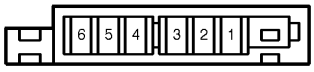			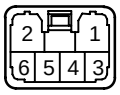
90980–10289	90980–10312	90980–10366 90980–10505	90980–10384 90980–10416 90980–10641
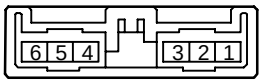	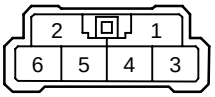	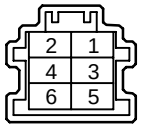	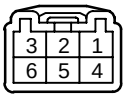
90980–10401	90980–10446	90980–10602	90980–10603
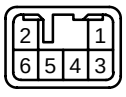	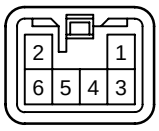	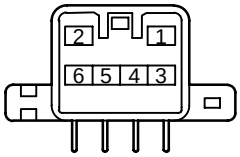	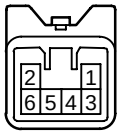
90980–10671	90980–10694	90980–10793	90980–10796
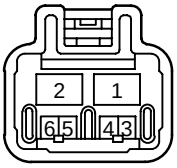	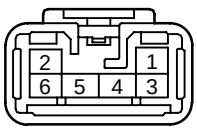	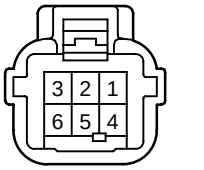	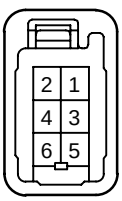
90980–10909	90980–10975	90980–10998	90980–11010

<MALE> 6P Non–waterproof Type

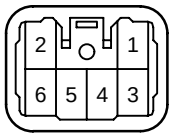 90980–11067	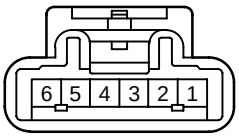 90980–11099	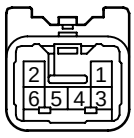 90980–11101	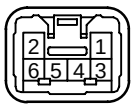 90980–11110
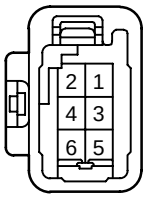 90980–11452	 90980–11487	 90980–11492	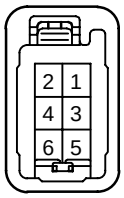 90980–11587
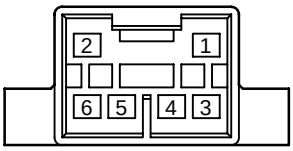 90980–11696	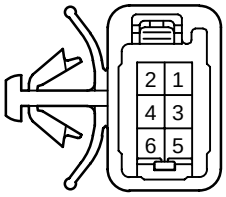 90980–11814	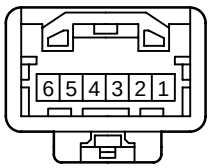 90980–12004	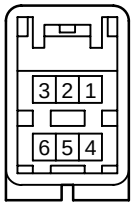 90980–12013
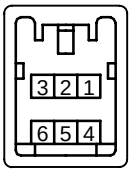 90980–12064	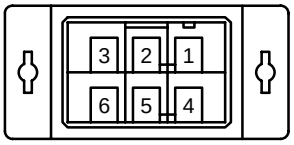 90980–12198	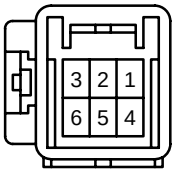 90980–12204	

<MALE> 7P Non–waterproof Type

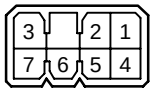 90980–10042	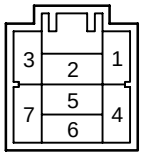 90980–10263	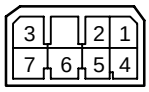 90980–10310	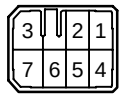 90980–10451
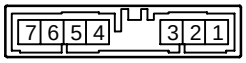 90980–10459	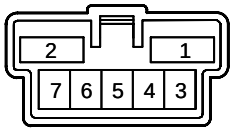 90980–10728 90980–10771	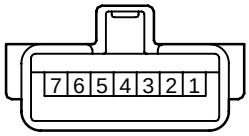 90980–11164	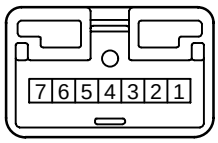 90980–11339
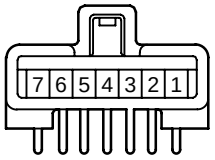 90980–11402	 90980–11528	 90980–11739	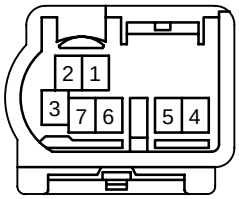 90980–12059
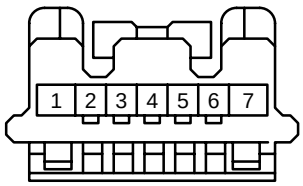 90980–12092			

<MALE> 8P Non–waterproof Type

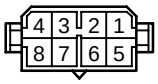 90980–10018	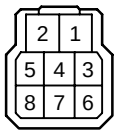 90980–10147	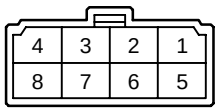 90980–10174
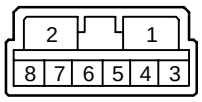 90980–10208 90980–10210 90980–10383 90980–10411	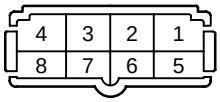 90980–10225	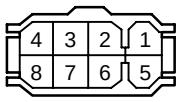 90980–10279
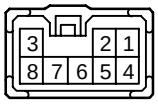 90980–10360	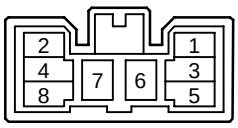 90980–10403	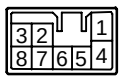 90980–10418
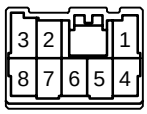 90980–10430 90980–10546	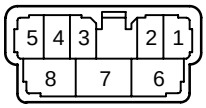 90980–10462	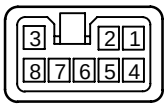 90980–10769

<MALE> 8P Non–waterproof Type

 90980–10798	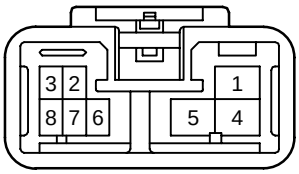 90980–10876 90980–11438	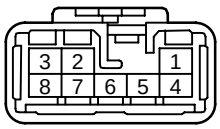 90980–10963
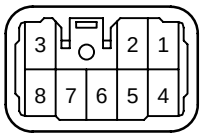 90980–11123	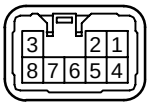 90980–11134	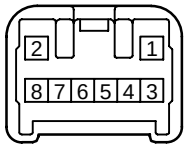 90980–11320
 90980–11353	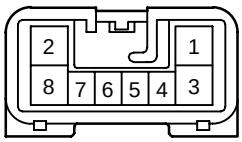 90980–11361	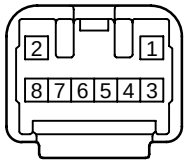 90980–11389
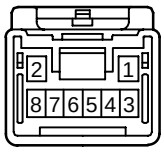 90980–11532	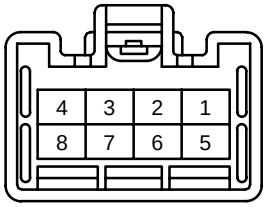 90980–11551	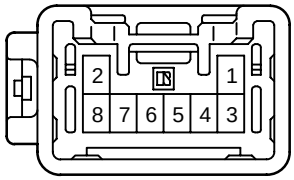 90980–11582

<MALE> 8P Non–waterproof Type

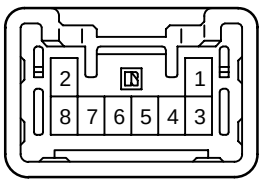 90980–11588	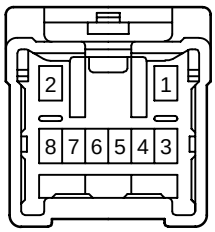 90980–11623	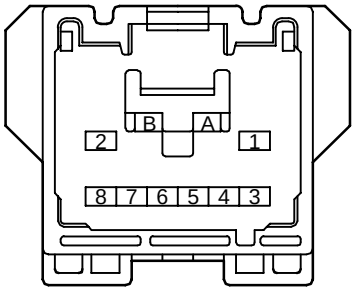 90980–11629
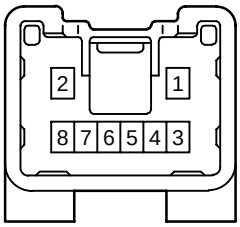 90980–11636	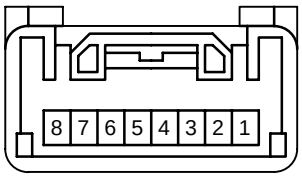 90980–12061	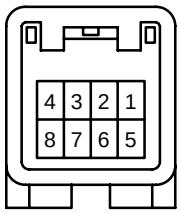 90980–12112
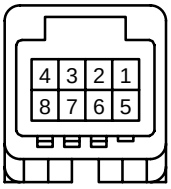 90980–12220		

<MALE> 9P Non–waterproof Type

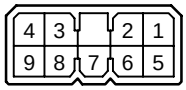	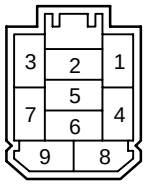	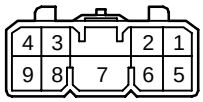
90980–10044	90980–10265	90980–10317
	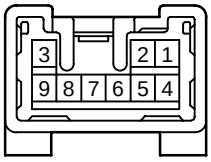	
90980–11534	90980–11543	90980–11709

<MALE> 10P Non–waterproof Type

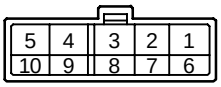 90980–10176	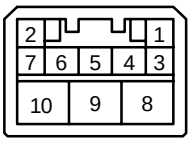 90980–10281	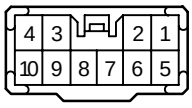 90980–10375 90980–10417 90980–10427 90980–10516
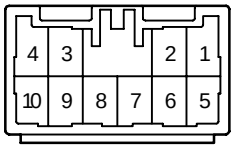 90980–10468	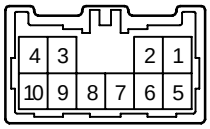 90980–10527 90980–10719	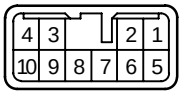 90980–10666
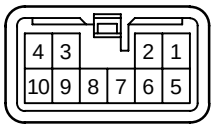 90980–10693	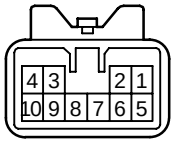 90980–10800	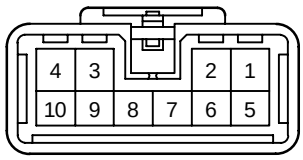 90980–10861
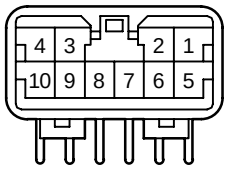 90980–10865 90980–11419	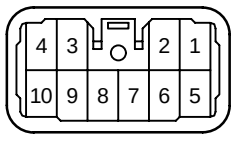 90980–10961	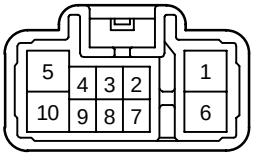 90980–10992

<MALE> 10P Non–waterproof Type

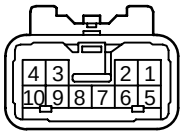 90980–11102	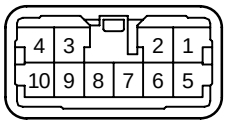 90980–11325 90980–11331	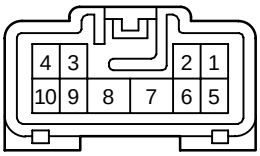 90980–11365
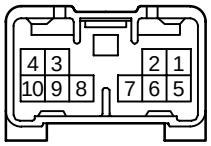 90980–11449	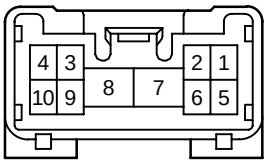 90980–11526	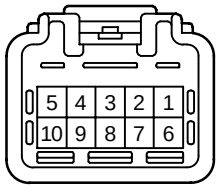 90980–11536
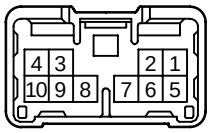 90980–11544	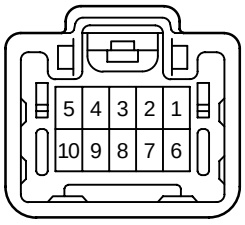 90980–11580	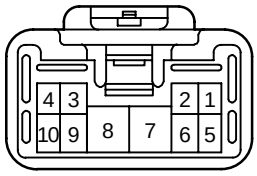 90980–11596
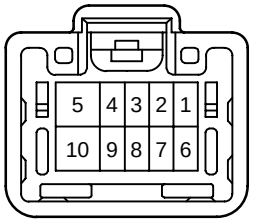 90980–11613	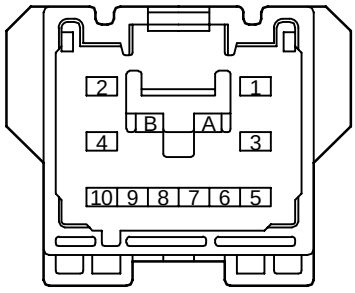 90980–11641	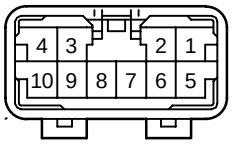 90980–11752

<MALE> 10P Non–waterproof Type

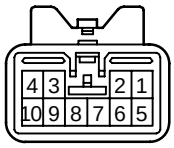 90980–11757	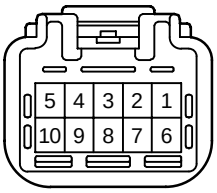 90980–11823	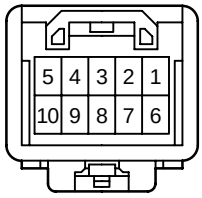 90980–11922
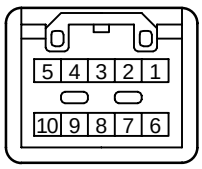 90980–11993	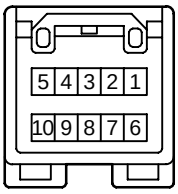 90980–12009	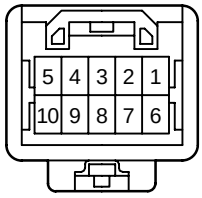 90980–12023
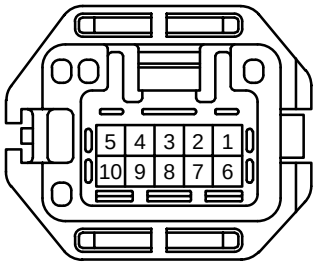 90980–12249		

<MALE> 11P Non–waterproof Type

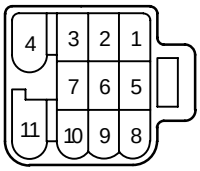 90980–10531	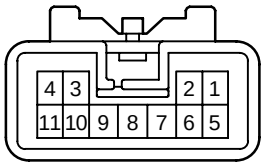 90980–10829	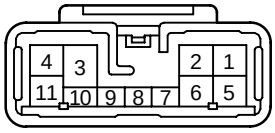 90980–10872
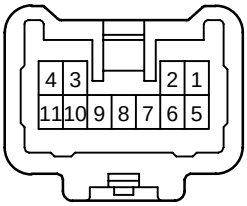 90980–11200	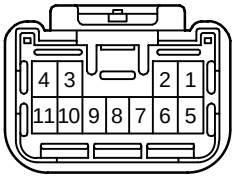 90980–11538	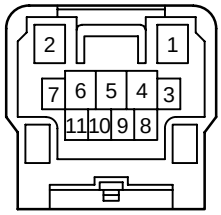 90908–12002
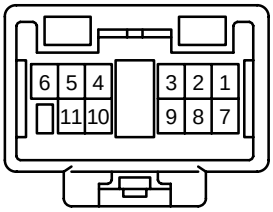 90980–12250		

<MALE> 12P Non–waterproof Type

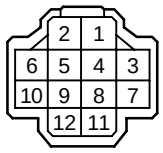 90980–10149	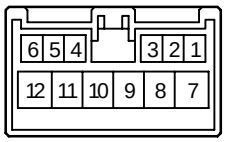 90980–10405	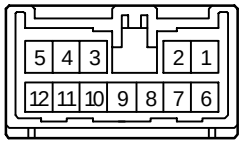 90980–10407 90980–10529
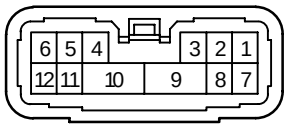 90980–10415	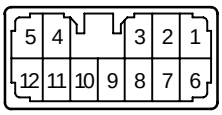 90980–10436 90980–10440	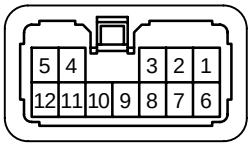 90980–10513
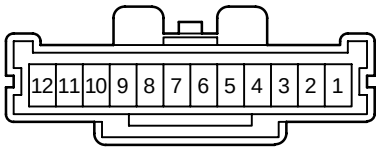 90980–10564	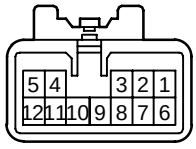 90980–10802	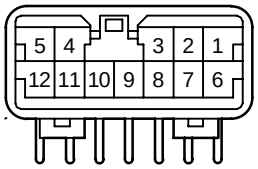 90980–10864
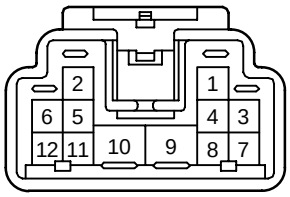 90980–10878	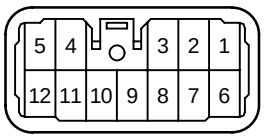 90980–10938 90980–11105	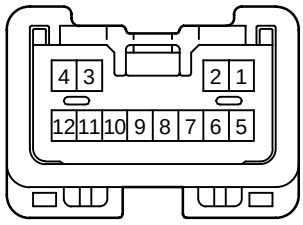 90980–11474

<MALE> 12P Non–waterproof Type

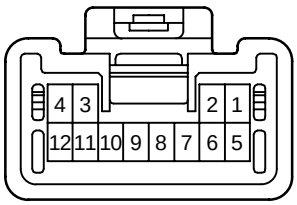	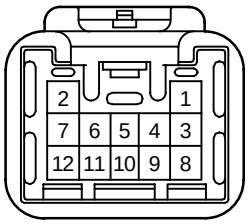	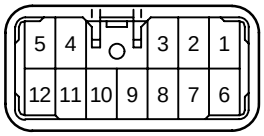
90980–11500	90980–11530	90980–11747

<MALE> 13P Non–waterproof Type

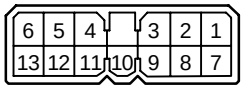	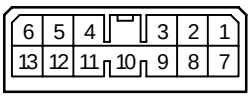	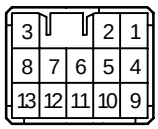
90980–10032	90980–10061	90980–10323
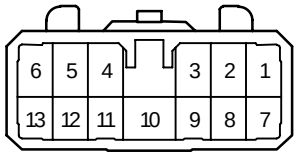	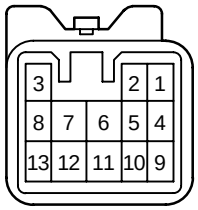	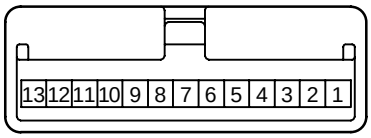
90980–10479	90980–10804	90980–11198
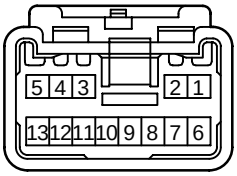	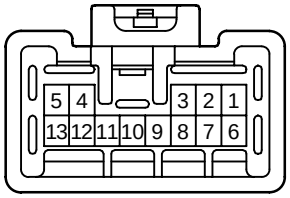	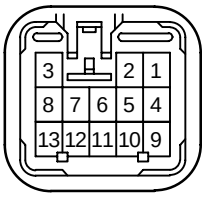
90980–11393	90980–11541	90980–11568
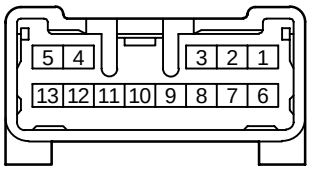	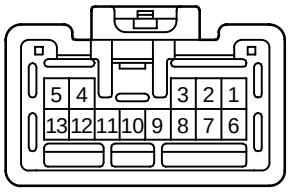	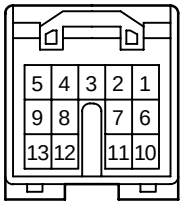
90980–11635	90980–11694	90980–11951

<MALE> 14P Non–waterproof Type

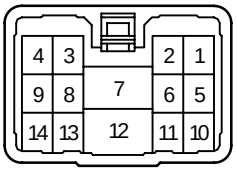

90980–10329

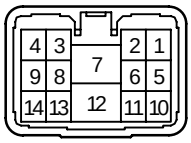

90980–10422

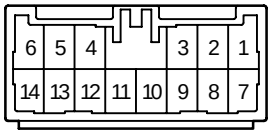

90980–10470

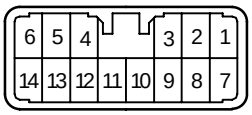

90980–10506
90980–10715

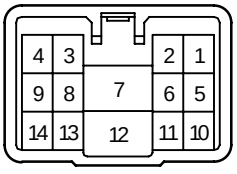

90980–10545

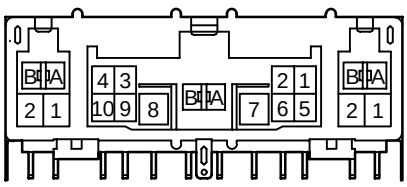

90980–10767

<MALE> 14P Non–waterproof Type

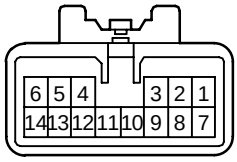

90980–10806

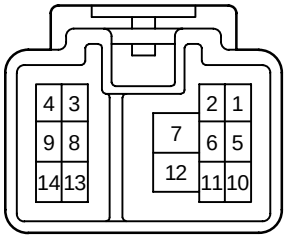

90980–10812

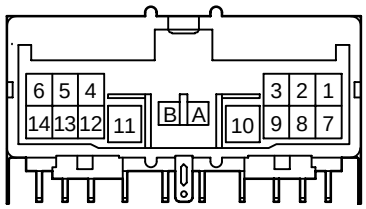

90980–10851

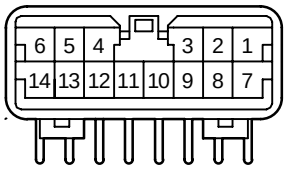

90980–10971
90980–11265

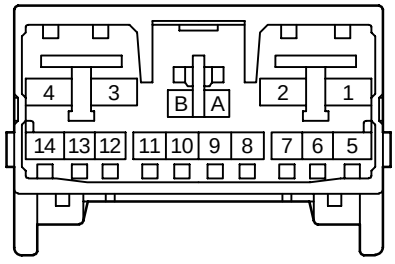

90980–11312

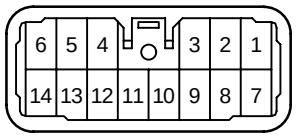

90980–11337

<MALE> 14P Non–waterproof Type

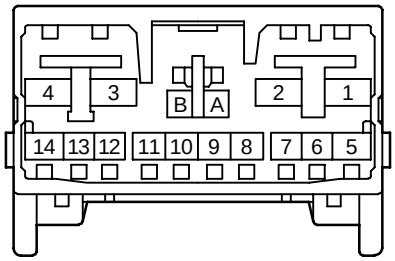

90980–11464

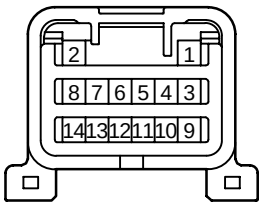

90980–11510

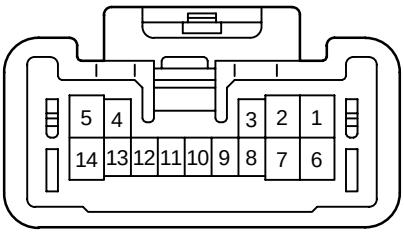

90980–11590

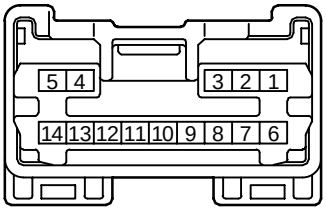

90980–11644
90980–11743
90980–11744

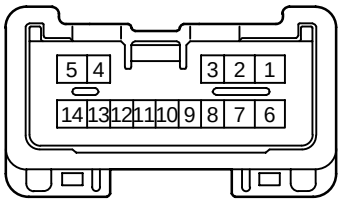

90980–11651

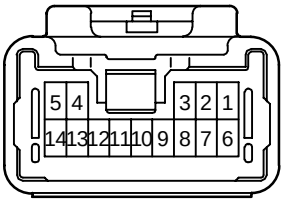

90980–11654

<MALE> 14P Non–waterproof Type

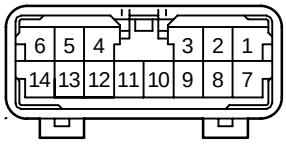

90980–11753

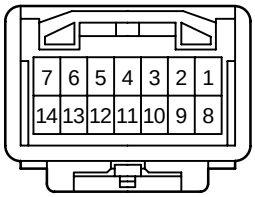

90980–11910

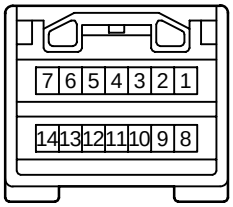

90980–11969
90980–12015

<MALE> 15P Non–waterproof Type

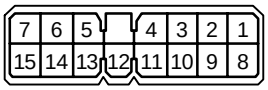

90980–10065

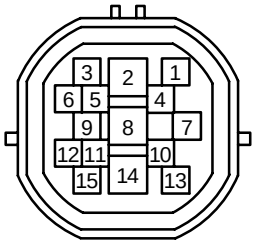

90980–10442

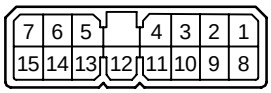

90980–10461

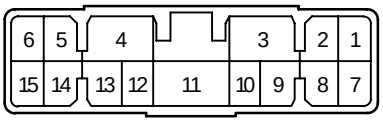

90980–10562

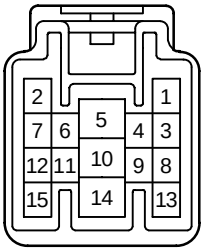

90980–10814

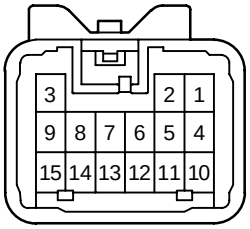

90980–10827

<MALE> 15P Non–waterproof Type

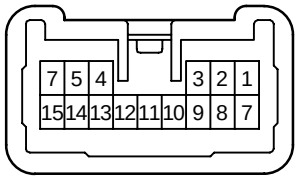

90980–11180

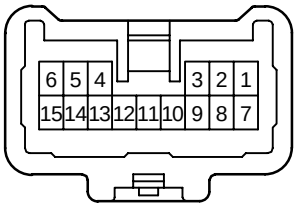

90980–11201

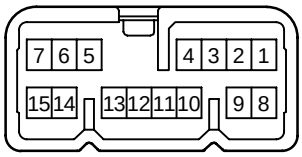

90980–11263

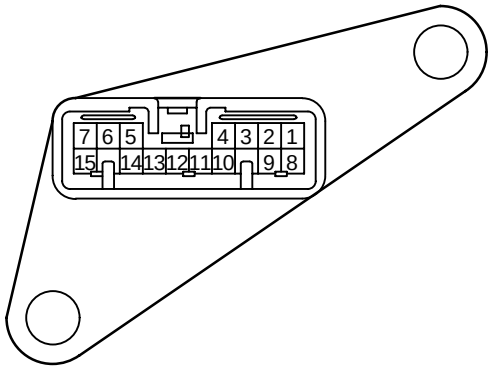

90980–11370

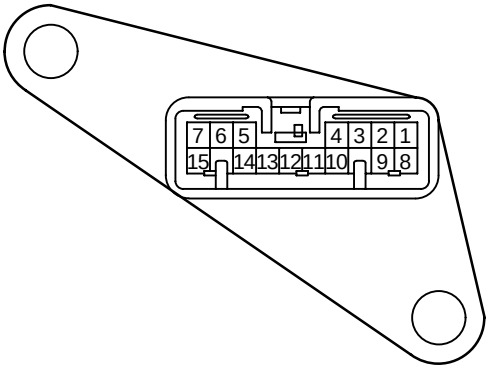

90980–11371

<MALE> 16P Non–waterproof Type

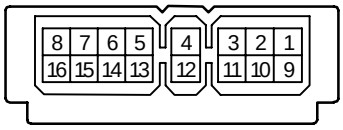

90980–10026

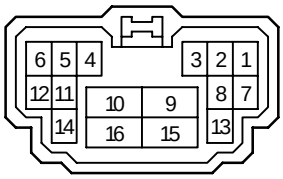

90980–10453

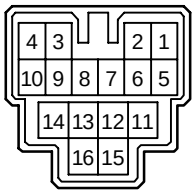

90980–10485

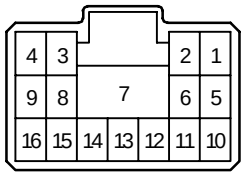

90980–10521

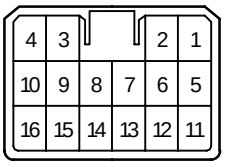

90980–10542

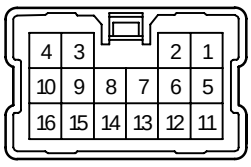

90980–10560

<MALE> 16P Non–waterproof Type

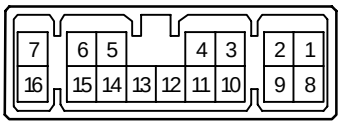

90980–10744

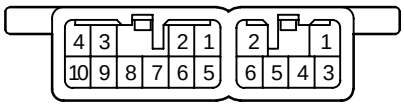

90980–10753

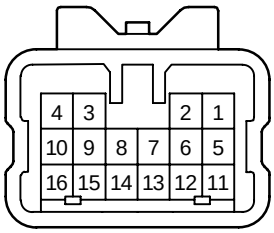

90980–10808
90980–11444

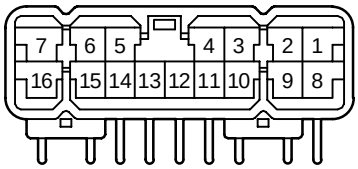

90980–10874

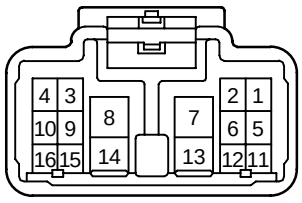

90980–10884

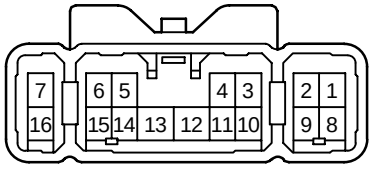

90980–11167

<MALE> 16P Non–waterproof Type

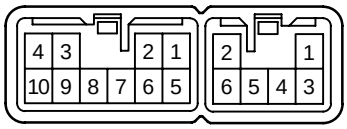

90980–11324

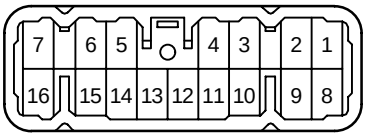

90980–11351

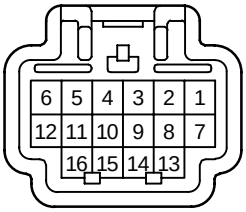

90980–11415

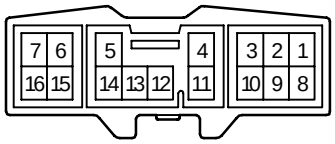

90980–11434

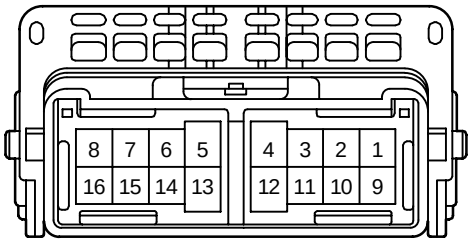

90980–11546

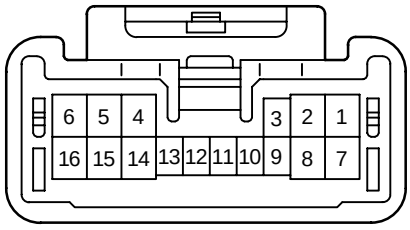

90980–11561

<MALE> 16P Non–waterproof Type

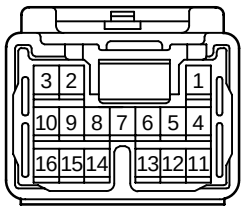

90980–11573

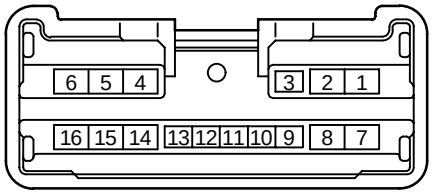

90980–11624

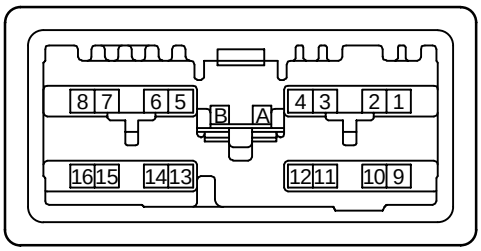

90980–11680

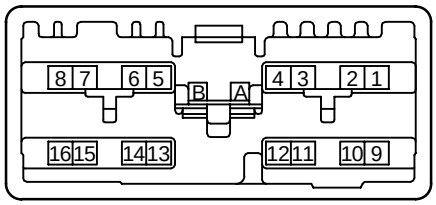

90980–11682

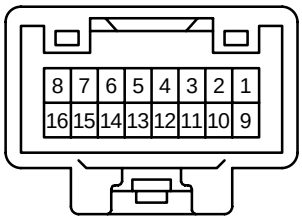

90980–12192

<MALE> 17P Non–waterproof Type

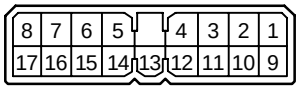

90980–10030

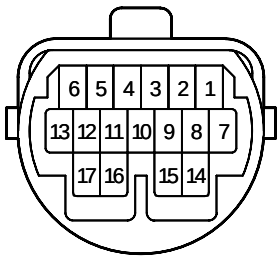

90980–10730

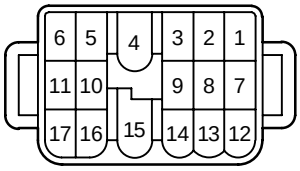

90980–11046

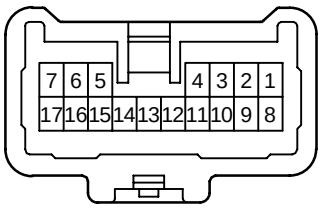

90980–11202

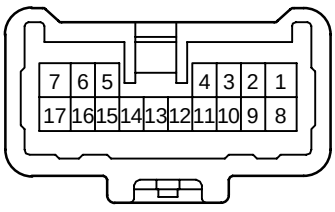

90980–11309

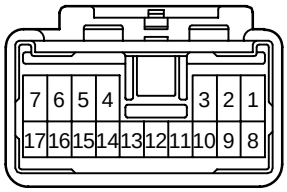

90980–11334

<MALE> 17P Non–waterproof Type

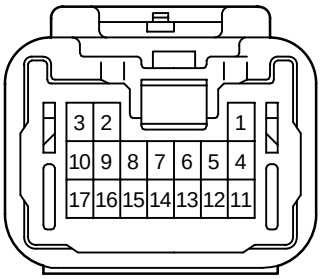

90980–11505

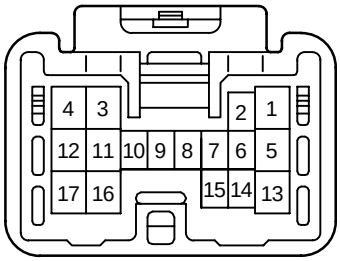

90980–11559

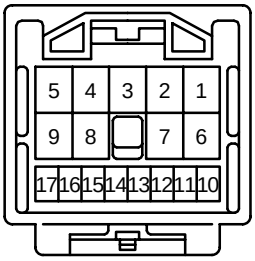

90980–12161

<MALE> 18P Non–waterproof Type

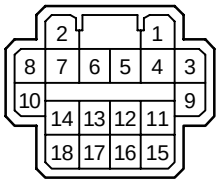

90980–10284

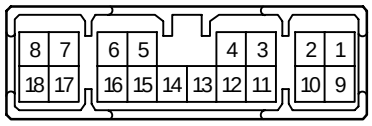

90980–10325

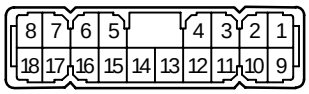

90980–10441

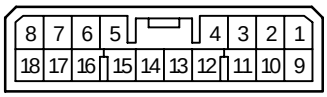

90980–10655
90980–11017

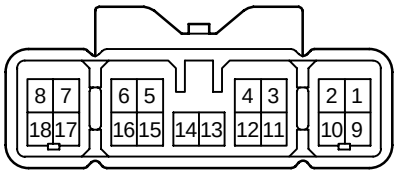

90980–10818

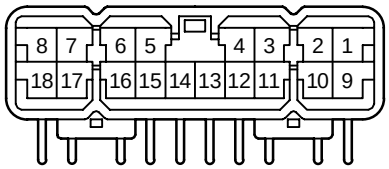

90980–10863

<MALE> 18P Non–waterproof Type

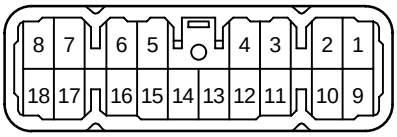

90980–10937
90980–11127

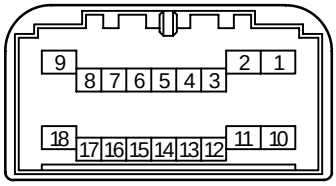

90980–11223

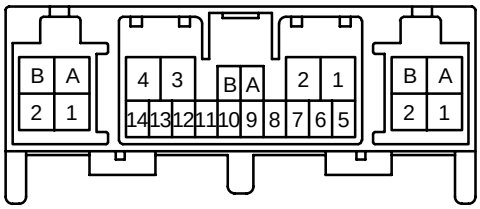

90980–11382

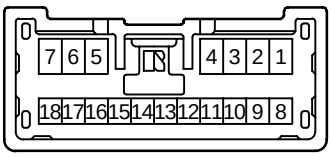

90980–11496

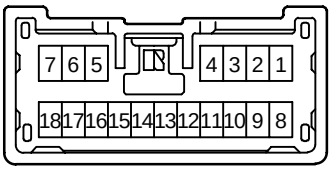

90980–11745

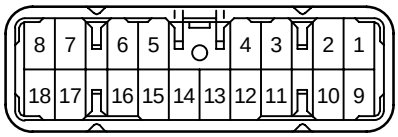

90980–11748

<MALE> 18P Non–waterproof Type

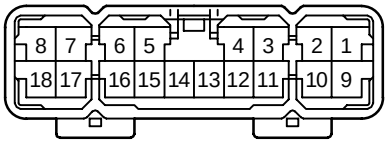

90980–11751

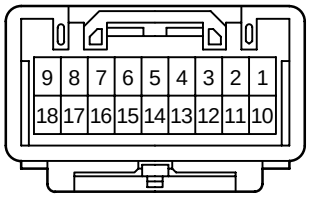

90980–11912

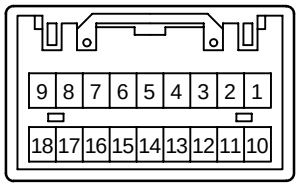

90980–11949

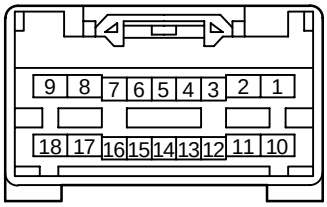

90980–12010

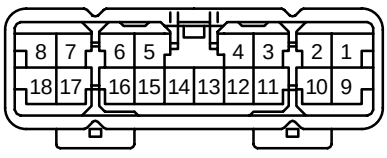

90980–12108

<MALE> 19P Non–waterproof Type

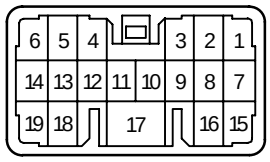

90980–10674

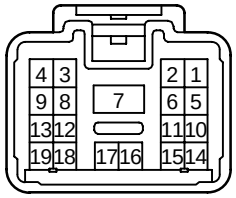

90980–10856

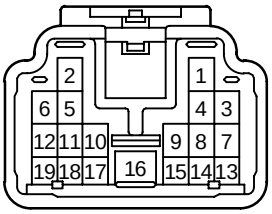

90980–10882

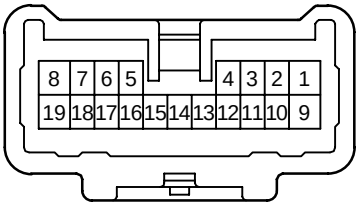

90980–11204

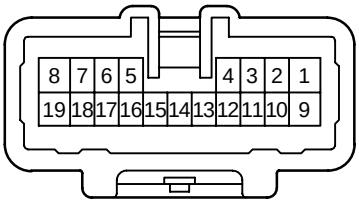

90980–11307

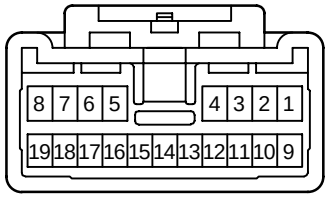

90980–11376

<MALE> 19P Non–waterproof Type

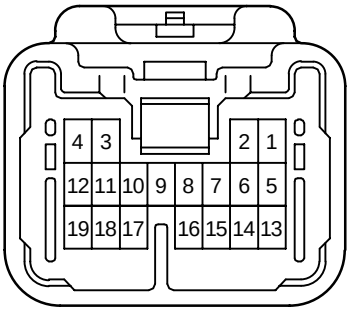

90980–11570

List of equivalent for the gold and tin–plated repair wire

Repair Wire Part No.	
Tin–plated (Sn)	Gold–plated (Au)
82998–12160 (2.3.M.U)	82998–24050
–12190 (1.8.F.U)	–12300
–12260 (2.3.M.S)	–24070
–12270 (2.3.F.S)	–24080
–12310 (1.0.F.U)	–12320
–12330 (2.3II.M.U)	–12350
–12340 (2.3II.F.U)	–12360
–12430 (2.3II.M.S)	–12450
–12440 (2.3II.F.S)	–12460
–12790 (2.3II.F.S)	–12780
–12670 (1.0III.M.U)	–12680
–12690 (1.0III.F.U)	–12700
–12720 (1.0III.F.S)	–12730
–24020 (1.0II.F.U)	–24110
–24090 (1.8II.M.U)	–24130

HOUSING PART NUMBER LIST

* Example : 82998–24050 indicates the gold–plated 82998–12160.

Part No. of Connector Body	Supply	Terminal	Male Female	Cav. No.	Sealing Ability	Part No. of Repair Wire		Sleeve Color	Memo
						160 mm Type	500 mm Type		
90980–						82998–	82998–		
10001	X	BHC	M	4	U	–	–	–	
10002	X	BHC	F	4	U	–	–	–	
10003	X	BHC	M	6	U	–	–	–	
10004	X	BHC	F	6	U	–	–	–	
10006	X	BHC	F	12	U	–	–	–	
10008	X	BHC	F	16	U	–	–	–	
10010	X	BHC	F	22	U	–	–	–	
10011	X	BHC	M	2	U	–	–	–	
10012	X	BHC	F	2	U	–	–	–	
10018	X	BHC	M	8	U	–	–	–	
10019	X	BHC	F	8	U	–	–	–	
10026	X	TODC	M	16	U	12080	–	L,Y	
10027	X	6.3 7.7	M	6 6	U	– 12010	– –	– Y	
10028	X	TODC	F	16	U	12090	–	L,Y	
10029	X	6.3 7.7	F	6 6	U	– 12020	– –	– Y	
10030	X	TODC	M	17	U	12080	–	L,Y	
10031	X	TODC	F	17	U	12090	–	L,Y	
10032	X	TODC	M	13	U	12080	–	L,Y	
10033	X	TODC	F	13	U	12090	–	L,Y	
10037	O	MIC	F	17	U	12120	–	L,Y	
10038	X	TODC	M	2	U	12080	–	L,Y	
10039	X	TODC	F	2	U	12090	–	L,Y	
10040	O	TODC	M	5	U	12080	–	L,Y	
10041	X	TODC	F	5	U	12090	–	L,Y	
10042	X	TODC	M	7	U	12080	–	L,Y	
10043	X	TODC	F	7	U	12090	–	L,Y	
10044	O	TODC	M	9	U	12080	–	L,Y	
10045	O	TODC	F	9	U	12090	–	L,Y	
10055	X	TODC	M	3	U	12080	–	L,Y	
10056	X	TODC	F	3	U	12090	–	L,Y	
10057	X	–	–	–	–	–	–	–	
10061	X	MIC	M	13	U	–	–	–	PCB
10062	O	MIC	F	13	U	12120	–	L,Y	
10063	X	MIC	M	21	U	–	–	–	PCB
10064	X	MIC	F	21	U	12120	–	L,Y	

HOUSING PART NUMBER LIST

Part No. of Connector Body	Supply	Terminal	Male Female	Cav. No.	Sealing Ability	Part No. of Repair Wire		Sleeve Color	Memo
						160 mm Type	500 mm Type		
90980–						82998–	82998–		
10065	X	TODC	M	15	U	12080	–	L,Y	
10066	X	TODC	F	15	U	12090	–	L,Y	
10068	X	TODC	M	9	U	–	–	–	PCB
10069	X	SL	F	2	U	12130	–	L,Y	
10070	O	SL	F	3	U	12130	–	L,Y	
10071	O	SL	F	7	U	12130	–	L,Y	
10072	X	6.3	F	3	U	12060	12580	Y	
10087	X	TODC	M	9	U	12080	–	L,Y	
10088	X	6.3	F	3	S	–	–	–	
10090	X	6.3	F	1	S	–	–	–	
10091	X	6.3	M	2	S	–	–	–	
10092	X	6.3	F	2	S	–	–	–	
10093	X	6.3	M	3	S	–	–	–	
10094	X	6.3	M	4	S	–	–	–	
10095	X	6.3	F	4	S	–	–	–	
10096	X	TODC	M	6	S	–	–	–	
10097	X	TODC	F	6	S	–	–	–	
10100	X	TODC	M	16	S	–	–	–	
10101	X	TODC	F	16	S	–	–	–	
10106	X	TODC	M	9	U	–	–	–	PCB
10108	X	SL	F	2	U	12130	–	L,Y	
10109	X	SL	F	2	U	12130	–	L,Y	
10110	X	6.3	F	3	S	–	–	–	
10111	X	FPC	F	3	U	–	–	–	
10112	X	FPC	F	8	U	–	–	–	
10113	X	FPC	F	8	U	–	–	–	
10114	O	7.7	M	1	S	–	–	–	
10115	O	7.7	F	1	S	–	–	–	
10116	X	6.3	F	2	S	–	–	–	
10117	X	TODC	M	5	U	12080	–	L,Y	
10119	X	FPC	F	8	U	–	–	–	
10121	X	TODC	F	2	U	12090	–	L,Y	
10122	X	7.7	M	2	S	–	–	–	
10123	X	7.7	F	2	S	–	–	–	
10124	X	6.3	F	2	U	–	–	–	
10125	X	TODC	M	1	S	–	–	–	
10126	X	TODC	M	4	U	12080	–	L,Y	
10127	X	TODC	F	4	U	12090	–	L,Y	
10130	X	TODC	M	5	U	–	–	–	PCB

HOUSING PART NUMBER LIST

Part No. of Connector Body	Supply	Terminal	Male Female	Cav. No.	Sealing Ability	Part No. of Repair Wire		Sleeve Color	Memo
						160 mm Type	500 mm Type		
90980–						82998–	82998–		
10131	X	LAC	M	22	U	12100	–	L,Y	
10132	O	LAC	F	13	U	12110	–	L,Y	
10133	X	LAC	F	9	U	12110	–	L,Y	
10138	X	MIC	M	13	U	–	–	–	PCB
10139	X	6.3	M	4	S	–	–	–	
10140	X	6.3	F	4	S	–	–	–	
10141	X	SL	F	2	U	12130	–	L,Y	
10142	X	6.3	F	4	U	–	–	–	
10143	X	FPC	F	3	U	–	–	–	
10144	X	6.3	M	4	U	–	–	–	
10145	X	6.3 7.7	M	3 3	U	– 12010	– –	– Y	
10146	X	6.3 7.7	F	2 1	U	– 12040	– –	– Y	
10147	X	TODC	M	8	U	12080	–	L,Y	
10148	X	TODC	F	8	U	12090	–	L,Y	
10149	X	TODC	M	12	U	12080	–	L,Y	
10150	X	TODC	F	12	U	12090	–	L,Y	
10151	X	MIC	M	22	U	–	–	–	PCB
10152	O	MIC	F	9	U	12120	–	L,Y	
10153	X	2.3	F	12	U	12170	–	L	
10154	X	6.3 7.7	M	3 3	U	– –	– –	– –	
10156	O	6.3	M	2	S	–	–	–	w/o Clamp
10157	O	6.3	F	2	S	–	–	–	
10158	X	FPC	F	10	U	–	–	–	
10159	X	FPC	F	10	U	–	–	–	
10160	X	7.7	M	1	U	12010	–	Y	
10161	X	6.3	M	5	S	–	–	–	w/o Clamp
10162	O	6.3	F	5	S	–	–	–	
10163	X	TODC	M	3	U	12080	–	L,Y	
10164	X	TODC	F	3	U	12090	–	L,Y	
10165	X	7.7	F	1	U	12020	–	Y	
10170	X	6.3	M	4	U	12050	–	Y	w/o Clamp
10171	O	6.3	F	4	U	12060	12580	Y	
10172	O	6.3	M	6	U	12050	–	Y	
10173	O	6.3	F	6	U	12060	12580	Y	
10174	O	6.3	M	8	U	12050	–	Y	
10175	O	6.3	F	8	U	12060	12580	Y	

HOUSING PART NUMBER LIST

Part No. of Connector Body	Supply	Terminal	Male Female	Cav. No.	Sealing Ability	Part No. of Repair Wire		Sleeve Color	Memo
						160 mm Type	500 mm Type		
90980– 10176	O	6.3	M	10	U	82998– 12050	82998– –	Y	
10177	O	6.3	F	10	U	12060	12580	Y	
10178	O	6.3	M	1	U	12050	–	Y	
10179	O	6.3	F	1	U	12060	12580	Y	
10182	O	TODC	M	1	U	12080	–	L,Y	
10183	O	TODC	F	1	U	12090	–	L,Y	
10184	X	TODC	F	2	S	–	–	–	
10185	X	7.7	F	2	U	12040	–	Y	
10186	X	6.3 7.7	M	2 1	U	12050 12030	– –	Y Y	
10187	X	6.3 7.7	M	2 1	U	12050 12030	– –	Y Y	
10188	X	6.3 7.7	M	2 1	U	12050 12030	– –	Y Y	
10189	X	6.3 7.7	F	2 1	U	12060 12040	12580 –	Y Y	
10190	X	EJ	M	3	S	–	–	–	
10191	X	EJ	F	3	S	–	–	–	
10192	X	EJ	M	2	S	–	–	–	
10193	X	EJ	F	2	S	–	–	–	
10194	X	TODC	M	6	S	–	–	–	
10195	X	TODC	F	6	S	–	–	–	
10196	X	6.3	F	4	U	12060	12580	Y	
10197	X	TODC	F	1	S	–	–	–	
10198	X	6.3 7.7	M	2 1	S	– –	– –	– –	
10199	X	6.3 7.7	F	2 1	S	– –	– –	– –	
10200	X	EJ	M	1	S	–	–	–	
10201	X	EJ	F	1	S	–	–	–	
10202	X	EJ	M	4	S	–	–	–	
10203	X	EJ	F	4	S	–	–	–	
10204	X	EJ	M	8	S	–	–	–	
10205	X	EJ	F	8	S	–	–	–	
10206	X	TODC	M	13	U	–	–	–	PCB
10207	X	TODC	F	21	U	12090	–	L,Y	
10208	X	6.3 TODC	M	8 8	U	– 12080	– –	– L,Y	w/ Flange

HOUSING PART NUMBER LIST

Part No. of Connector Body	Supply	Terminal	Male Female	Cav. No.	Sealing Ability	Part No. of Repair Wire		Sleeve Color	Memo
						160 mm Type	500 mm Type		
90980–						82998–	82998–		
10209	X	6.3	F	2	U	12060	12580	Y	
		TODC		6		12090	–	L,Y	
10210	X	6.3	M	2	U	12050	–	Y	w/o Clamp
		TODC		6		12080	–	L,Y	
10211	X	TODC	M	7	U	12080	–	L,Y	
10212	X	TODC	M	13	U	12080	–	L,Y	
10213	O	6.3	M	2	U	12050	–	Y	w/o Clamp
10214	O	6.3	F	2	U	12060	12580	Y	
10215	X	6.3	M	3	U	12050	–	Y	w/o Clamp
10216	O	6.3	F	3	U	12060	12580	Y	
10217	X	TODC	M	4	S	–	–	–	
10218	X	TODC	F	4	S	–	–	–	
10219	X	6.3	M	4	U	12050	–	Y	
10220	X	6.3	F	4	S	–	–	–	
10221	X	6.3	F	4	U	12060	12580	Y	
10222	X	6.3	F	3	U	12060	12580	Y	
10223	X	6.3	M	6	U	12050	–	Y	
10224	X	6.3	F	6	U	12060	12580	Y	
10225	X	6.3	M	8	U	12050	–	Y	
10228	X	HEAD-LAMP	F	3	U	24140	24200	L,Y	
10229	X	6.3	F	1	U	12060	12580	Y	
10231	X	6.3	M	3	U	12050	–	Y	
10232	X	6.3	F	3	U	12060	12580	Y	
10233	X	6.3	M	25	U	12050	–	Y	
		TODC		25		12080	–	L,Y	
10234	X	6.3	F	3	U	–	–	–	
10235	X	6.3	M	2	S	–	–	–	
		7.7		1		–	–	–	
10236	X	6.3	F	2	S	–	–	–	
		7.7		1		–	–	–	
10237	X	6.3	M	4	U	12050	–	Y	
10238	X	7.7	F	2	U	12020	–	Y	
10239	X	6.3	F	3	S	–	–	–	
10240	O	TODC	M	1	S	–	–	–	
10241	O	TODC	F	1	S	–	–	–	
10242	X	TODC	M	2	S	–	–	–	
10243	X	TODC	F	2	S	–	–	–	
10244	O	TODC	M	3	S	–	–	–	

HOUSING PART NUMBER LIST

Part No. of Connector Body	Supply	Terminal	Male Female	Cav. No.	Sealing Ability	Part No. of Repair Wire		Sleeve Color	Memo
						160 mm Type	500 mm Type		
90980–10245	X	TODC	F	3	S	82998––	82998––	–	
10246	O	6.3	M	1	S	–	–	–	
10247	O	6.3	F	1	S	–	–	–	
10248	X	6.3	M	3	S	–	–	–	w/o Clamp
10249	O	6.3	F	3	S	–	–	–	
10250	X	6.3	F	1	U	12060	12580	Y	
10251	X	6.3	M	1	U	12050	–	Y	w/o Clamp
10252	X	6.3	F	1	U	12060	12580	Y	
10253	X	6.3	M	1	U	12050	–	Y	
10254	X	6.3	F	1	U	12060	12580	Y	
10255	X	6.3	M	2	U	12050	–	Y	
10256	X	6.3	F	2	U	12060	12580	Y	
10257	X	6.3	M	3	U	12050	–	Y	w/o Clamp
10258	X	6.3	F	3	U	12060	12580	Y	
10259	X	6.3	M	4	U	12050	–	Y	
10260	X	6.3	F	4	U	12060	12580	Y	
10261	X	6.3	M	5	U	12050	–	Y	
10262	X	6.3	F	5	U	12060	12580	Y	
10263	X	6.3	M	7	U	12050	–	Y	
10264	X	6.3	F	7	U	12060	12580	Y	
10265	X	6.3	M	9	U	12050	–	Y	
10266	X	6.3	F	9	U	12060	12580	Y	
10267	X	MIC	M	9	U	–	–	–	PCB
10272	X	LC	M	8	U	–	–	–	
10273	X	LC	F	8	U	–	–	–	
10274	O	TODC	F	5	U	12090	–	L,Y	
10275	X	TODC	M	7	U	12080	–	L,Y	
10276	X	6.3	M	5	U	12050	–	Y	
10277	X	6.3	M	7	U	12050	–	Y	
10278	X	6.3	M	9	U	12050	–	Y	
10279	X	TODC	M	8	U	12080	–	L,Y	
10280	X	TODC	F	8	U	12090	–	L,Y	
10281	X	6.3 TODC	M	3 7	U	12050 12080	– –	Y L,Y	
10282	X	6.3 TODC	F	3 7	U	12060 12090	12580 –	Y L,Y	
10283	O	6.3	M	3	U	12050	–	Y	w/ Clamp
10284	X	TODC	M	18	U	12080	–	L,Y	
10285	X	TODC	F	18	U	12090	–	L,Y	

HOUSING PART NUMBER LIST

Part No. of Connector Body	Supply	Terminal	Male Female	Cav. No.	Sealing Ability	Part No. of Repair Wire		Sleeve Color	Memo
						160 mm Type	500 mm Type		
90980– 10286	X	TODC	M	2	U	82998– 12080	82998– –	L,Y	
10287	X	TODC	M	16	S	–	–	–	
10288	X	TODC	F	16	S	–	–	–	
10289	X	LC	M	6	U	–	–	–	
10290	X	LC	F	6	U	–	–	–	
10291	X	LC	M	14	U	–	–	–	
10292	X	LC	F	14	U	–	–	–	
10293	X	PULSE LOCK	M	52	U	–	–	–	PCB
10294	O	PULSE LOCK	F	10	U	12200	–	L,Y	
10295	O	PULSE LOCK	F	18	U	12210	–	L	
10296	O	PULSE LOCK	F	24	U	12210	–	L	
10297	X	TODC	M	2	U	12080	–	L,Y	
10298	X	TODC	F	2	U	12090	–	L,Y	
10299	X	6.3	M	3	U	12050	–	Y	
10300	X	6.3	M	3	U	12050	–	Y	w/ Flange
10301	X	MFPC	F	8	U	12150	–	L	
10302	O	MFPC	F	10	U	12150	–	L	
10303	O	MFPC	F	12	U	12150	–	L	
10304	X	MFPC	F	10	U	12150	–	L	
10305	X	6.3	M	2	U	12050	–	Y	w/ Clamp
10306	X	6.3 TODC	M	2 2	U	12050 12080	– –	Y L,Y	
10307	X	6.3 TODC	F	2 2	U	12060 12090	12580 –	Y L,Y	
10308	X	MIC	M	5	U	–	–	–	PCB
10309	X	MIC	F	5	U	12120	–	L,Y	
10310	X	MIC	M	7	U	–	–	–	PCB
10311	X	MIC	F	7	U	12120	–	L,Y	
10312	X	TODC	M	6	U	12080	–	L,Y	
10313	X	TODC	F	6	U	12090	–	L,Y	
10314	X	TODC	M	5	U	12080	–	L,Y	
10315	X	MODU	M	26	U	–	–	–	
10316	X	MODU	F	26	U	–	–	–	
10317	X	6.3 TODC	M	1 8	U	12050 12080	– –	Y L,Y	

HOUSING PART NUMBER LIST

Part No. of Connector Body	Supply	Terminal	Male Female	Cav. No.	Sealing Ability	Part No. of Repair Wire		Sleeve Color	Memo
						160 mm Type	500 mm Type		
90980–						82998–	82998–		
10318	X	6.3	F	1	U	12060	12580	Y	
		TODC		8		12090	–	L,Y	
10319	X	6.3	F	1	U	12060	12580	Y	
		TODC		10		12090	–	L,Y	
10320	X	2.3	F	2	U	12170	–	L	
10321	X	2.3	F	8	U	12170	–	L	
10322	O	2.3	F	10	U	12170	–	L	
10323	X	2.3	M	13	U	12160*	–	L	
10324	X	2.3	F	13	U	12170	–	L	
10325	O	2.3	M	18	U	12160*	–	L	
10326	O	2.3	F	18	U	12170	–	L	
10327	X	2.3	F	20	U	12170	–	L	
10328	X	2.3	F	22	U	12170	–	L	
10329	X	2.3	M	12	U	12160*	–	L	
		6.3		2		12050	–	Y	
10330	X	2.3	F	12	U	12170	–	L	
		6.3		2		12060	12580	Y	
10331	X	2.3	F	14	U	12170	–	L	
		6.3		1		12060	12580	Y	
10332	X	7.7	F	1	U	12040	–	Y	
10333	X	6.3	F	2	U	12060	12580	Y	
10334	X	6.3	F	6	U	12060	12580	Y	
10335	X	6.3	F	6	U	12060	12580	Y	
10336	X	6.3	F	8	U	12060	12580	Y	
10337	X	6.3	F	11	U	12060	12580	Y	
10338	X	6.3	F	11	U	12060	12580	Y	
10339	X	6.3	F	4	U	12060	12580	Y	
		7.7		1		12040	–	Y	
10340	X	6.3	F	2	U	12060	12580	Y	
		7.7		3		12040	–	Y	
10341	X	6.3	F	3	S	12540	–	Y	
10342	X	7.7	M	1	U	12030	–	Y	
10343	X	7.7	F	1	U	12040	–	Y	
10344	X	6.3	M	2	U	12050	–	Y	w/o Clamp
10345	X	6.3	F	2	U	12060	12580	Y	
10346	X	6.3	M	2	U	12050	–	Y	w/ Clamp
10347	O	6.3	M	3	S	12050	–	Y	w/ Clamp
10348	X	6.3	F	2	U	12060	12580	Y	

HOUSING PART NUMBER LIST

Part No. of Connector Body	Supply	Terminal	Male Female	Cav. No.	Sealing Ability	Part No. of Repair Wire		Sleeve Color	Memo
						160 mm Type	500 mm Type		
90980– 10349	X	PULSE LOCK	M	30	U	82998– –	82998– –	–	PCB
10350	X	PULSE LOCK	F	18	U	12200	–	L,Y	
10351	O	PULSE LOCK	F	12	U	12200	–	L,Y	
10352	X	TODC	F	2	S	–	–	–	
10353	O	TODC	F	3	S	–	–	–	
10354	X	2.3	M	2	U	12160*	–	L	w/o Clamp
10355	O	2.3	F	2	U	12170	–	L	
10356	O	7.7	M	2	U	12030	–	Y	
10357	O	7.7	F	2	U	12040	–	Y	
10358	X	6.3	F	8	U	12060	12580	Y	
10359	O	6.3	F	1	U	12060	12580	Y	
10360	X	2.3	M	8	U	12160*	–	L	
10361	X	2.3	M	20	U	12160*	–	L	
10362	O	SP	F	2	U	12530	–	L,Y	
10363	X	5.2	F	1	U	–	–	–	
10364	X	2.3	M	3	U	12160*	–	L	w/o Clamp
10365	O	2.3	F	3	U	12170	–	L	
10366	O	2.3	M	6	U	12160*	–	L	w/o Clamp
10367	O	2.3	F	6	U	12170	–	L	
10368	X	MFPC	F	14	U	12150	–	L	
10369	O	MFPC	F	14	U	12150	–	L	
10370	X	PULSE LOCK	M	42	U	–	–	–	PCB
10371	O	PULSE LOCK	F	14	U	12210	–	L	
10372	X	MFPC	F	12	U	12150	–	L	
10373	X	7.7 TODC	F	2 2	S	– –	– –	– –	
10374	X	7.7	M	2	S	–	–	–	
10375	X	2.3	M	10	U	12160*	–	L	w/o Flange
10376	X	SP SP	F	5 5	U	12520 12530	– –	L,Y L,Y	
10377	X	SP	F	10	U	12530	–	L,Y	
10378	O	MIC	F	4	U	12120	–	L,Y	
10379	X	TODC	M	9	S	–	–	–	
10380	X	TODC	F	9	S	–	–	–	w/o Clamp
10381	X	TODC	F	9	S	–	–	–	w/ Clamp

HOUSING PART NUMBER LIST

Part No. of Connector Body	Supply	Terminal	Male Female	Cav. No.	Sealing Ability	Part No. of Repair Wire		Sleeve Color	Memo
						160 mm Type	500 mm Type		
90980–						82998–	82998–		
10382	X	6.3 7.7	F	4 2	U	12060 12040	12580 –	Y Y	
10383	X	6.3 TODC	M	2 6	U	– 12080	– –	– L,Y	w/ Flange
10384	O	2.3	M	6	U	12160*	–	L	w/o Flange
10385	X	7.7	F	2	U	12040	–	Y	
10386	X	6.3	F	9	U	12060	12580	Y	
10392	X	TLC TODC	M	3 2	S	12280 –	– –	R –	
10393	X	TLC TODC	F	3 2	S	12290 –	– –	R –	
10394	X	TLC	M	3	S	12280	–	R	w/ Clamp
10395	X	TLC	F	3	S	12290	–	R	
10396	X	TLC	M	1	U	12220	–	L	
10397	X	2.3	F	12	U	12170	–	L	
10398	X	TLC	F	1	U	12230	–	L	
10399	O	TLC	M	4	U	12220	–	L	
10400	X	TLC	F	4	U	12230	–	L	
10401	O	TLC	M	6	U	12220	–	L	
10402	O	TLC	F	6	U	12230	–	L	
10403	X	TLC TODC	M	6 2	U	12220 12080	– –	L L,Y	
10404	X	TLC TODC	F	6 2	U	12230 12090	– –	L L,Y	
10405	X	2.3 TLC	M	6 6	U	12160* 12220	– –	L L	
10406	X	2.3 TLC	F	6 6	U	12170 12230	– –	L L	
10407	X	TLC	M	12	U	12220	–	L	
10408	X	TLC	F	12	U	12230	–	L	
10410	X	6.3	M	3	U	12050	–	Y	w/ Clamp
10411	X	6.3 TODC	M	2 6	U	12050 12080	– –	Y L,Y	w/ Clamp
10412	X	6.3	M	2	S	–	–	–	w/ Clamp
10413	X	2.3	M	18	U	12160*	–	L	
10414	O	2.3	F	6	U	12170	–	L	
10415	X	2.3 6.3	M	10 2	U	12160* 12050	– –	L Y	
10416	X	2.3	M	6	U	–	–	–	PCB

HOUSING PART NUMBER LIST

Part No. of Connector Body	Supply	Terminal	Male Female	Cav. No.	Sealing Ability	Part No. of Repair Wire		Sleeve Color	Memo
						160 mm Type	500 mm Type		
90980–10417	X	2.3	M	10	U	82998––	82998––	–	PCB
10418	X	2.3 TODC	M	6 2	U	12160* 12080	– –	L L,Y	
10419	X	2.3 TODC	F	6 2	U	12170 12090	– –	L L,Y	
10420	X	2.3	F	3	U	12170	–	L	
10421	X	2.3 6.3	F	10 2	U	12170 12060	– 12580	L Y	
10422	X	2.3 6.3	M	12 2	U	12160* 12050	– –	L Y	
10423	X	MIC	F	2	U	12120	–	L,Y	
10424	X	6.3	M	2	U	12050	–	Y	
10425	X	6.3	F	2	U	12060	12580	Y	
10426	X	MIC	F	2	U	12120	–	L,Y	
10427	X	2.3	M	10	U	12160*	–	L	w/ Flange
10428	O	HEAD-LAMP	F	3	U	24140	24200	L,Y	
10429	X	PULSE LOCK	M	24	U	–	–	–	PCB
10430	X	TLC	M	8	U	12220	–	L	
10431	X	TLC	F	8	U	12230	–	L	
10432	O	2.3	F	12	U	12170	–	L	
10433	X	2.3	M	1	U	12160*	–	L	w/o Clamp
10434	X	2.3	M	1	U	12160*	–	L	w/ Clamp
10435	X	2.3	F	1	U	12170	–	L	
10436	X	2.3	M	12	U	–	–	–	PCB
10437	O	2.3	M	2	U	12160*	–	L	w/ Clamp
10438	X	2.3	M	1	S	12260*	–	L	
10439	X	2.3	F	1	S	12270*	12600	L	
10440	X	2.3	M	12	U	–	–	–	PCB
10441	X	2.3	M	18	U	–	–	–	PCB
10442	X	1.8 6.3	M	12 3	U	12180 12050	– –	L Y	
10443	X	1.8 6.3	F	12 3	U	12190* 12060	– 12580	L Y	
10444	X	TLC	M	3	S	12280	–	R	w/o Clamp
10445	X	TODC	M	13	U	–	–	–	PCB
10446	X	6.3 7.7	M	4 2	U	12050 12030	– –	Y Y	

HOUSING PART NUMBER LIST

Part No. of Connector Body	Supply	Terminal	Male Female	Cav. No.	Sealing Ability	Part No. of Repair Wire		Sleeve Color	Memo
						160 mm Type	500 mm Type		
90980–						82998–	82998–		
10447	O	6.3	F	4	U	12060	12580	Y	
		7.7		2		12040	–	Y	
10448	X	6.3 II	M	4	U	–	–	–	
10449	X	6.3 II	F	8	U	24170	–	Y	
10450	X	6.3 II	F	11	U	24170	–	Y	
10451	X	6.3	M	7	U	12050	–	Y	
10452	X	6.3	F	7	U	12060	12580	Y	
10453	X	2.3	M	12	U	12160*	–	L	
		6.3		4		12050	–	Y	
10454	X	2.3	F	12	U	12170	–	L	
		6.3		4		12060	12580	Y	
10455	X	TLC	M	22	U	12220	–	L	
10456	X	TLC	F	22	U	12230	–	L	
10457	X	2.3	M	19	U	12160*	–	L	
		6.3		3		12050	–	Y	
10458	X	2.3	F	19	U	12170	–	L	
		6.3		3		12060	12580	Y	
10459	X	TLC	M	7	U	–	–	–	PCB
10460	X	TLC	F	7	U	12230	–	L	
10461	X	TODC	M	15	U	12080	–	L,Y	
10462	X	2.3	M	5	U	12160*	–	L	
		6.3		3		12050	–	Y	
10463	O	2.3	F	5	U	12170	–	L	
		6.3		3		12060	12580	Y	
10464	X	TODC	F	3	U	12090	–	L,Y	
10465	X	2.3	F	2	U	12170	–	L	
10466	X	TNS	M	4	U	12240	–	L	
10467	O	TNS	F	4	U	12250	–	L	
10468	X	TNS	M	10	U	12240	–	L	
10469	X	TNS	F	10	U	12250	–	L	
10470	O	TNS	M	14	U	12240	–	L	
10471	O	TNS	F	14	U	12250	–	L	
10472	X	2.3	M	12	U	12160*	–	L	
		TNS		9		12240	–	L	
10473	X	2.3	F	12	U	12170	–	L	
		TNS		9		12250	–	L	
10474	O	2.3	F	2	S	12270*	12600	L	
10475	O	2.3	M	4	S	12260*	–	L	
10476	O	2.3	F	4	S	12270*	12600	L	

HOUSING PART NUMBER LIST

Part No. of Connector Body	Supply	Terminal	Male Female	Cav. No.	Sealing Ability	Part No. of Repair Wire		Sleeve Color	Memo
						160 mm Type	500 mm Type		
90980–10477	X	2.3	M	6	S	82998–12260*	82998– –	L	
10478	X	2.3	F	6	S	12270*	12600	L	
10479	X	2.3 6.3	M	12 1	U	12160* 12050	– –	L Y	
10480	X	2.3 6.3	F	12 1	U	12170 12060	– 12580	L Y	
10481	O	6.3	F	2	U	12060	12580	Y	
10482	X	2.3	F	2	U	12170	–	L	
10483	X	2.3	F	3	U	12170	–	L	
10484	X	2.3	F	4	U	12170	–	L	
10485	X	2.3 TODC	M	10 6	U	12160* 12080	– –	L L,Y	
10486	X	2.3 TODC	F	10 6	U	12170 12090	– –	L L,Y	
10487	O	FTC	F	5	U	12510	–	L,Y	
10488	O	FTC	F	5	U	12510	–	L,Y	
10489	O	FTC	F	3	U	12510	–	L,Y	
10490	O	FTC	F	3	U	12510	–	L,Y	
10491	X	MIC	F	2	U	12120	–	L,Y	
10492	X	2.3	M	3	S	12260*	–	L	w/o Clamp
10493	X	2.3	M	3	S	12260*	–	L	w/ Clamp
10494	X	2.3	F	3	S	12270*	12600	L	
10495	O	2.3	M	2	S	12260*	–	L	
10496	O	2.3	F	2	S	12270*	12600	L	
10497	X	2.3	M	2	S	12260*	–	L	
10498	O	2.3	F	2	S	12270*	12600	L	
10499	X	6.3	M	1	U	12050	–	Y	w/ Clamp
10500	X	2.3	M	3	S	12260*	–	L	
10501	X	2.3	F	3	S	12270*	12600	L	
10502	X	2.3	M	4	U	12160*	–	L	
10503	X	2.3	M	4	U	12160*	–	L	
10504	O	2.3	F	4	U	12170	–	L	
10505	X	2.3	M	6	U	12160*	–	L	w/ Clamp
10506	X	2.3	M	14	U	–	–	–	PCB
10507	X	2.3	F	14	U	12170	–	L	
10508	X	2.3	M	20	U	–	–	–	PCB
10509	X	TODC	F	5	U	12090	–	L,Y	
10510	X	TNS	M	4	S	–	–	–	w/o Clamp
10511	X	TNS	F	2	U	12250	–	L	

HOUSING PART NUMBER LIST

Part No. of Connector Body	Supply	Terminal	Male Female	Cav. No.	Sealing Ability	Part No. of Repair Wire		Sleeve Color	Memo
						160 mm Type	500 mm Type		
90980–10512	X	TNS	F	2	U	82998–12250	82998– –	L	
10513	O	2.3	M	12	U	12160*	–	L	
10514	X	2.3 6.3	F	2 2	U	12170 12060	– 12580	L Y	
10515	X	2.3	F	4	U	12170	–	L	
10516	X	2.3	M	10	U	–	–	–	PCB
10517	X	2.3 6.3 7.7	F	4 2 2	U	12170 12060 12040	– 12580 –	L Y Y	
10518	X	2.3 6.3	M	4 1	U	12160* 12050	– –	L Y	
10519	X	2.3 6.3	M	4 1	U	12160* 12050	– –	L Y	
10520	X	2.3 6.3	F	4 1	U	12170 12060	– 12580	L Y	
10521	X	2.3 7.7	M	15 1	U	12160* 12030	– –	L Y	
10522	X	2.3 7.7	F	15 1	U	12170 12040	– –	L Y	
10523	X	TNS	F	8	U	12250	–	L	
10524	X	TNS	F	12	U	12250	–	L	
10525	X	TNS	F	16	U	12250	–	L	
10526	O	TNS	F	22	U	12250	–	L	
10527	X	TLC	M	10	U	–	–	–	PCB
10528	O	TLC	F	10	U	12230	–	L	
10529	X	TLC	M	12	U	–	–	–	PCB
10530	X	2.3 6.3	F	17 1	U	12170 12060	– 12580	L Y	
10531	X	2.3	M	11	U	12160*	–	L	
10532	O	2.3	F	2	S	12270*	12600	L	
10533	X	2.3	M	2	S	12260*	–	L	
10534	X	2.3	F	2	S	12270*	12600	L	
10535	X	2.3	M	3	U	–	–	–	PCB
10536	X	2.3 6.3	F	8 1	U	12170 12060	– 12580	L Y	
10537	X	2.3 6.3	F	10 1	U	12170 12060	– 12580	L Y	
10538	X	2.3	F	14	U	12170	–	L	
10539	X	2.3	F	16	U	12170	–	L	

HOUSING PART NUMBER LIST

Part No. of Connector Body	Supply	Terminal	Male Female	Cav. No.	Sealing Ability	Part No. of Repair Wire		Sleeve Color	Memo
						160 mm Type	500 mm Type		
90980–						82998–	82998–		
10542	X	2.3	M	16	U	12160*	–	L	
10543	X	2.3	F	16	U	12170	–	L	
10544	X	2.3	M	3	U	12160*	–	L	
10545	X	2.3	M	12	U	12160*	–	L	
		6.3		2		12050	–	Y	
10546	X	TLC	M	8	U	12220	–	L	
10547	X	2.3	M	12	S	12260*	–	L	
		6.3		2		–	–	–	
		7.7		2		–	–	–	
10548	X	2.3	F	12	S	12270*	12600	L	
10549	X	6.3	F	2	S	–	–	–	
		7.7		2		–	–	–	
10550	X	2.3	F	3	S	12270*	12600	L	
		6.3		2		–	–	–	
10551	X	6.3	F	4	S	–	–	–	
10552	O	TNS	M	22	U	12240	–	L	
10553	X	TLC	M	3	S	12280	–	R	w/ Clamp
10554	O	TLC	F	3	S	12290	–	R	
10555	X	2.3	M	2	S	12260*	–	L	
10556	X	2.3	F	2	S	12270*	12600	L	
10557	X	TLC	M	5	S	12280	–	R	w/ Clamp
10558	X	TLC	F	5	S	12290	–	R	
10559	X	7.7	F	2	U	12040	–	Y	
10560	X	2.3	M	16	U	12160*	–	L	
10561	X	2.3	F	16	U	12170	–	L	
10562	X	2.3	M	12	U	12160*	–	L	
		6.3		2		12050	–	Y	
		7.7		1		12030	–	Y	
10563	X	2.3	F	12	U	12170	–	L	
		6.3		2		12060	12580	Y	
		7.7		1		12040	–	Y	
10564	X	1.8	M	12	U	12180	–	L	
10565	X	1.8	F	12	U	12190*	–	L	
10566	X	6.3	M	2	S	–	–	–	
10567	X	6.3	F	2	S	12540	–	Y	
10568	X	TODC	M	12	S	–	–	–	
10569	X	TODC	F	12	S	–	–	–	
10570	X	TLC	M	5	S	12280	–	R	w/o Clamp
10571	X	2.3	M	2	S	12260*	–	L	

HOUSING PART NUMBER LIST

Part No. of Connector Body	Supply	Terminal	Male Female	Cav. No.	Sealing Ability	Part No. of Repair Wire		Sleeve Color	Memo
						160 mm Type	500 mm Type		
90980– 10572	O	2.3	F	2	S	82998– 12270*	82998– 12600	L	
10573	O	2.3	M	3	U	12160*	–	L	w/ Clamp
10574	X	HEAD-LAMP	F	3	S	24150	24190	L,Y	
10575	O	2.3	M	2	S	12260*	–	L	
10576	X	2.3	F	2	S	12270*	12600	L	
10577	O	TLC	M	3	S	12280	–	R	w/ Clamp
10578	X	2.3	F	2	S	12270*	12600	L	
10579	X	HEAD-LAMP	F	3	S	24150	24190	L,Y	
10580	O	2.3	M	2	S	12260*	–	L	
10581	X	2.3	F	2	S	12270*	12600	L	
10582	X	2.3	M	2	S	12260*	–	L	
10583	X	2.3	F	2	S	12270*	12600	L	
10584	X	TNS	M	38	U	–	–	–	PCB
10585	X	TNS	F	24	U	12250	–	L	
10586	X	TNS	M	26	U	–	–	–	PCB
10587	O	TNS	F	26	U	12250	–	L	
10588	X	TNS	M	20	U	–	–	–	PCB
10589	X	TNS	F	20	U	12250	–	L	
10590	O	2.3	M	4	S	12260*	–	L	
10591	X	2.3	F	4	S	12270*	12600	L	
10592	O	2.3	M	2	S	12260*	–	L	
10593	X	2.3	F	2	S	12270*	12600	L	
10594	X	2.3	M	2	S	12260*	–	L	
10595	X	2.3	F	2	S	12270*	12600	L	
10596	X	2.3	M	6	S	12260*	–	L	
10597	X	2.3	F	6	S	12270*	12600	L	
10598	O	2.3	F	2	S	12270*	12600	L	
10599	O	TNS	M	26	U	12240	–	L	
10600	X	2.3	M	4	U	12160*	–	L	
10601	O	2.3	F	4	U	12170	–	L	
10602	X	2.3	M	6	U	12160*	–	L	
10603	X	2.3	M	6	U	12160*	–	L	
10604	X	2.3	F	6	U	12170	–	L	
10605	X	2.3	F	6	U	12170	–	L	
10606	X	1.8	M	34	U	12180	–	L	
10607	X	1.8	F	20	U	12190*	–	L	
10608	X	1.8	F	14	U	12190*	–	L	
10609	O	2.3	F	2	S	12270*	12600	L	

HOUSING PART NUMBER LIST

Part No. of Connector Body	Supply	Terminal	Male Female	Cav. No.	Sealing Ability	Part No. of Repair Wire		Sleeve Color	Memo
						160 mm Type	500 mm Type		
90980–						82998–	82998–		
10610	X	2.3	F	1	U	12170	–	L	
		TNS		4		12250	–	L	
10611	X	2.3	F	8	U	12170	–	L	
		TNS		8		12250	–	L	
10612	X	2.3	F	10	U	12170	–	L	
		TNS		10		12250	–	L	
10613	X	TNS	F	16	U	12250	–	L	
10614	X	TNS	F	16	U	12250	–	L	
10615	X	TODC	M	7	U	–	–	–	PCB
10616	X	6.3	F	4	S	12540	–	Y	
10617	X	2.3	F	2	S	12270*	12600	L	
10618	X	6.3	F	2	U	12060	12580	Y	
		7.7		1		12040	–	Y	
10619	O	6.3	F	1	U	12060	12580	Y	
10620	X	TLC	M	2	U	12220	–	L	
10621	X	TLC	F	2	U	12230	–	L	
10622	X	2.3	F	2	S	12270*	12600	L	
10623	X	2.3	F	2	S	12270*	12600	L	
10624	X	2.3	F	5	S	12270*	12600	L	
10625	X	2.3	M	2	S	12260*	–	L	w/ Clamp
10626	X	2.3	F	2	S	12270*	12600	L	
10627	X	TLC	M	7	S	12280	–	R	
10628	X	TLC	F	7	S	12290	–	R	
10629	X	2.3	F	3	S	12270*	12600	L	
10630	X	2.3	M	18	U	–	–	–	PCB
10631	X	2.3	F	5	U	12170	–	L	
10632	X	2.3	F	12	U	12170	–	L	
10633	X	TLC	F	14	U	12230	–	L	
10634	X	TLC	F	14	U	12230	–	L	
10635	X	TLC	F	16	U	12230	–	L	
10636	X	TLC	F	16	U	12230	–	L	
10637	X	2.3	F	2	U	12170	–	L	
10638	X	2.3	F	3	U	12170	–	L	
10639	X	2.3	M	20	U	12160*	–	L	
10640	X	2.3	F	20	U	12170	–	L	
10641	X	2.3	M	6	U	12160*	–	L	w/ Flange
10642	X	2.3	M	5	S	–	–	–	PCB
10643	X	2.3	F	6	S	12270*	12600	L	
10644	X	2.3	F	5	U	12170	–	L	

HOUSING PART NUMBER LIST

Part No. of Connector Body	Supply	Terminal	Male Female	Cav. No.	Sealing Ability	Part No. of Repair Wire		Sleeve Color	Memo
						160 mm Type	500 mm Type		
90980–10645	O	MFPC	F	4	U	82998–12150	82998–––	L	
10646	X	6.3	M	4	S	–	–	–	
10647	X	6.3	M	5	S	–	–	–	w/ Clamp
10648	O	2.3	M	4	S	12260*	–	L	
10649	X	2.3	F	4	S	12270*	12600	L	
10650	O	2.3	M	6	S	12260*	–	L	w/ Clamp
10651	X	2.3	F	6	S	12270*	12600	L	
10652	X	7.7	F	1	U	12040	–	Y	
10653	X	1.8	M	13	S	–	–	–	
10654	X	1.8	F	13	S	12620	–	L	
10655	X	1.8	M	18	U	–	–	–	PCB
10656	X	1.8	F	18	U	12190*	–	L	
10657	X	1.8	M	30	U	–	–	–	PCB
10658	O	1.8	F	12	U	12190*	–	L	
10659	X	FTC	F	5	U	12510	–	L,Y	
10660	X	2.3	F	3	U	12170	–	L	
10661	X	TNS	M	14	U	–	–	–	PCB
10662	X	TNS	M	4	S	–	–	–	
10663	X	TNS	F	4	S	–	–	–	Outer
10664	X	TNS	F	4	S	–	–	–	Inner
10665	X	2.3	M	2	S	12260*	–	L	
10666	X	2.3	M	10	U	–	–	–	PCB
10667	X	2.3	M	10	U	–	–	–	PCB
10668	X	2.3	M	10	U	–	–	–	PCB
10669	O	2.3	F	10	U	12170	–	L	
10670	X	2.3	M	6	U	–	–	–	PCB
10671	X	2.3	M	6	U	–	–	–	PCB
10672	O	2.3	F	6	U	12170	–	L	
10673	X	6.3 7.7	F	4 2	U	12060 12040	12580 –	Y Y	
10674	X	2.3 6.3	M	18 1	U	12160* 12050	– –	L Y	
10675	X	2.3 6.3	F	18 1	U	12170 12060	– 12580	L Y	
10676	X	TLC	M	7	S	12280	–	R	
10677	X	TLC	M	9	S	12280	–	R	
10678	X	TLC	F	9	S	12290	–	R	
10679	O	2.3	F	2	U	12170	–	L	
10680	X	TLC	M	10	U	–	–	–	PCB

HOUSING PART NUMBER LIST

Part No. of Connector Body	Supply	Terminal	Male Female	Cav. No.	Sealing Ability	Part No. of Repair Wire		Sleeve Color	Memo
						160 mm Type	500 mm Type		
90980–10681	X	TNS	M	20	U	82998––	82998––	–	PCB
10682	X	TNS	M	3	S	–	–	–	
10683	X	TNS	F	3	S	–	–	–	
10684	X	TNS	F	3	S	–	–	–	
10685	X	2.3 6.3	F	2 2	S	12270* 12540	12600 –	L Y	
10686	O	2.3 6.3	F	7 2	S	12270* 12540	12600 –	L Y	
10687	X	2.3	M	2	U	12160*	–	L	
10688	X	5.2	F	1	U	–	–	–	
10689	X	2.3	M	3	S	12260*	–	L	
10690	X	2.3	F	3	S	12270*	12600	L	
10691	X	TNS	M	4	U	–	–	–	PCB
10692	X	TNS	F	4	U	12250	–	L	
10693	X	2.3	M	10	U	12160*	–	L	
10694	X	2.3	M	6	U	12160*	–	L	
10695	X	2.3	F	3	S	12270*	12600	L	
10696	O	1.8	F	20	U	12190*	–	L	
10697	O	1.8	F	14	U	12190*	–	L	
10698	X	TLC	M	3	S	12280	–	R	
10699	X	TLC	M	10	U	–	–	–	PCB
10700	X	6.3	M	2	U	12050	–	Y	
10701	X	6.3	F	4	S	12540	–	Y	
10702	O	2.3	F	2	S	12270*	12600	L	
10703	X	6.3	F	1	U	12060	12580	Y	
10704	X	6.3	F	3	U	12060	12580	Y	
10705	X	6.3	F	1	S	–	–	–	
10706	O	2.3	F	2	S	12270*	12600	L	
10707	X	2.3	M	2	S	12260*	–	L	
10708	X	6.3	F	3	S	–	–	–	
10709	X	2.3 TLC	M	2 3	S	12260* 12280	– –	L R	
10710	X	2.3 TLC	F	2 3	S	12270* 12290	12600 –	L R	
10711	O	1.8	F	4	S	12620	–	L	
10712	X	2.3	F	5	S	12270*	12600	L	
10713	X	6.3 7.7	F	3 2	U	12060 12040	12580 –	Y Y	

HOUSING PART NUMBER LIST

Part No. of Connector Body	Supply	Terminal	Male Female	Cav. No.	Sealing Ability	Part No. of Repair Wire		Sleeve Color	Memo
						160 mm Type	500 mm Type		
90980– 10714	X	2.3 6.3	F	9 3	U	82998– 12170 12060	82998– – 12580	 L Y	
10715	X	2.3	M	14	U	12160*	–	L	
10716	X	2.3	F	4	U	12170	–	L	
10717	X	2.3	F	4	U	12170	–	L	
10718	X	6.3	F	5	U	12060	12580	Y	
10719	O	TLC	M	10	U	12220	–	L	
10720	O	2.3	F	2	S	12270*	12600	L	
10721	X	2.3	F	10	U	12170	–	L	
10722	X	1.8	M	34	U	12180	–	L	
10723	X	2.3	F	11	U	12170	–	L	
10724	X	2.3	F	12	U	12170	–	L	
10725	X	2.3	F	12	U	12170	–	L	
10726	X	PULSE LOCK	M	30	U	–	–	–	PCB
10727	X	2.3 6.3	F	9 2	U	12170 12060	– 12580	L Y	
10728	X	2.3 6.3	M	5 2	U	– –	– –	– –	PCB
10729	X	2.3 6.3	F	5 2	U	12170 12060	– 12580	L Y	
10730	X	2.3	M	17	U	12160*	–	L	
10731	X	2.3	F	17	U	12170	–	L	
10732	X	TNS	M	14	U	–	–	–	PCB
10733	X	TNS	M	20	U	–	–	–	PCB
10734	X	1.8	F	2	S	12620	–	L	
10735	X	1.8	F	2	S	12620	–	L	
10736	X	1.8	F	2	S	12620	–	L	
10737	O	1.8	F	2	S	12620	–	L	
10738	X	1.8 1.0	M	16 48	U	– –	– –	– –	PCB
10739	X	1.8 1.0	F	10 16	U	12190* 12310*	– –	L L	
10740	X	1.0	F	16	U	12310*	–	L	
10741	X	1.8 1.0	F	6 16	U	12190* 12310*	– –	L L	
10742	X	1.8	M	42	U	–	–	–	PCB
10743	O	1.8	F	12	U	12190*	–	L	
10744	X	2.3	M	16	U	–	–	–	PCB

HOUSING PART NUMBER LIST

Part No. of Connector Body	Supply	Terminal	Male Female	Cav. No.	Sealing Ability	Part No. of Repair Wire		Sleeve Color	Memo
						160 mm Type	500 mm Type		
90980–10745	X	2.3	M	6	U	82998––	82998––	–	PCB
10747	X	8.0	F	3	U	12400	–	Y	
10748	X	2.3	F	2	S	12270*	12600	L	
10749	O	4.8 2.3 II	M	2 2	S	12470 12430*	– –	Y L,Y	
10750	X	TNS	M	26	U	12240	–	L	
10751	X	2.3	M	4	S	12260*	–	L	w/ Clamp
10752	X	1.8	M	30	U	–	–	–	PCB
10753	X	2.3	M	16	U	–	–	–	PCB
10758	X	6.3	M	4	U	12050	–	Y	w/ Clamp
10759	X	6.3 7.7	F	2 2	U	12060 12040	12580 –	Y Y	
10760	X	5.2 6.3	F	1 1	U	– 12060	– 12580	– Y	
10761	X	1.8 1.0	M	16 48	U	– –	– –	– –	PCB
10762	X	2.3	M	5	U	12160*	–	L	
10763	O	1.8 1.0	F	10 16	U	12190* 12310*	– –	L L	
10764	O	1.0	F	16	U	12310*	–	L	
10765	O	1.8 1.0	F	6 16	U	12190* 12310*	– –	L L	
10766	X	6.3 7.7	F	4 2	U	12060 12040	12580 –	Y Y	
10767	X	2.3 II	M	14	U	–	–	–	PCB
10768	X	2.3	M	4	S	12260*	–	L	w/o Clamp
10769	X	2.3	M	8	U	–	–	–	PCB
10770	X	PULSE LOCK	M	24	U	–	–	–	PCB
10771	X	2.3 6.3	M	5 2	U	– –	– –	– –	PCB
10772	X	2.3 6.3	F	5 2	U	12170 12060	– 12580	L Y	
10773	X	1.8 1.0	M	16 48	U	– –	– –	– –	PCB
10774	X	2.3	M	3	S	12260*	–	L	w/ Clamp
10775	X	TODC	M	9	S	–	–	–	
10776	X	TODC	F	9	S	–	–	–	
10777	X	TLC	M	3	S	12280	–	R	w/ Clamp

HOUSING PART NUMBER LIST

Part No. of Connector Body	Supply	Terminal	Male Female	Cav. No.	Sealing Ability	Part No. of Repair Wire		Sleeve Color	Memo
						160 mm Type	500 mm Type		
90980–						82998–	82998–		
		2.3		2	S	12270*	12600	L	
10778	X	2.3	F	15	U	12170	–	L	
		6.3		1		12060	12580	Y	
10779	X	TNS	M	24	U	12240	–	L	
10780	X	1.8	M	16	U	–	–	–	PCB
		1.0		48		–	–	–	
10781	X	MIC	F	11	U	12120	–	L,Y	
10782	X	7.7	F	1	U	12040	–	Y	
10783	X	7.7	F	2	U	12040	–	Y	
10784	X	6.3	F	2	U	12060	12580	Y	
		7.7		1		12040	–	Y	
10785	X	2.3	F	6	U	12170	–	L	
10786	O	6.3	F	1	U	12070	–	Y	
10787	X	2.3	M	3	S	12260*	–	L	w/ Clamp
10788	X	2.3	M	2	S	12260*	–	L	w/ Clamp
10789	O	2.3 II	F	5	U	12340*	–	L,Y	
10790	X	2.3 II	M	5	U	–	–	–	PCB
10791	X	2.3	M	2	U	12160*	–	L	
		6.3		2		12050	–	Y	
10792	O	6.3	F	1	U	12060	12580	Y	
10793	X	2.3 II	M	6	U	–	–	–	PCB
10794	O	2.3 II	M	4	U	12330*	–	L,Y	
10795	O	2.3 II	F	4	U	12340*	–	L,Y	
10796	O	2.3 II	M	6	U	12330*	–	L,Y	
10797	O	2.3 II	F	6	U	12340*	–	L,Y	
10798	O	2.3 II	M	8	U	12330*	–	L,Y	
10799	O	2.3 II	F	8	U	12340*	–	L,Y	
10800	O	2.3 II	M	10	U	12330*	–	L,Y	
10801	O	2.3 II	F	10	U	12340*	–	L,Y	
10802	O	2.3 II	M	12	U	12330*	–	L,Y	
10803	O	2.3 II	F	12	U	12340*	–	L,Y	
10804	O	2.3 II	M	13	U	12330*	–	L,Y	
10805	O	2.3 II	F	13	U	12340*	–	L,Y	
10806	O	2.3 II	M	14	U	12330*	–	L,Y	
10807	O	2.3 II	F	14	U	12340*	–	L,Y	
10808	O	2.3 II	M	16	U	12330*	–	L,Y	
10809	O	2.3 II	F	16	U	12340*	–	L,Y	
10810	O	2.3 II	M	20	U	12330*	–	L,Y	
10811	O	2.3 II	F	20	U	12340*	–	L,Y	

HOUSING PART NUMBER LIST

Part No. of Connector Body	Supply	Terminal	Male Female	Cav. No.	Sealing Ability	Part No. of Repair Wire		Sleeve Color	Memo
						160 mm Type	500 mm Type		
90980–						82998–	82998–		
10812	O	4.8	M	2	U	12370	–	Y	
		2.3 II		12		12330*	–	L,Y	
10813	O	4.8	F	2	U	12380	–	Y	
		2.3 II		12		12340*	–	L,Y	
10814	O	4.8	M	3	U	12370	–	Y	
		2.3 II		12		12330*	–	L,Y	
10815	O	4.8	F	3	U	12380	–	Y	
		2.3 II		12		12340*	–	L,Y	
10816	O	4.8	M	2	U	12370	–	Y	
		2.3 II		18		12330*	–	L,Y	
10817	O	4.8	F	2	U	12380	–	Y	
		2.3 II		18		12340*	–	L,Y	
10818	O	2.3 II	M	18	U	12330*	–	L,Y	
10819	O	2.3 II	F	18	U	12340*	–	L,Y	
10820	O	2.3 II	M	20	U	12330*	–	L,Y	
10821	O	2.3 II	F	20	U	12340*	–	L,Y	
10822	O	2.3 II	F	10	U	12340*	–	L,Y	
10823	O	2.3 II	F	2	U	12340*	–	L,Y	
10824	O	2.3 II	M	2	U	12330*	–	L,Y	
10825	O	2.3 II	F	2	U	12340*	–	L,Y	
10826	X	TLC	M	9	S	12280	–	R	
10827	O	2.3 II	M	15	U	12330*	–	L,Y	
10828	O	2.3 II	F	15	U	12340*	–	L,Y	
10829	O	2.3 II	M	11	U	12330*	–	L,Y	
10830	O	2.3 II	F	11	U	12340*	–	L,Y	
10831	X	2.3	F	4	S	12270*	12600	L	
10833	O	2.3 II	M	2	U	12330*	–	L,Y	w/ Clamp
10834	O	2.3 II	F	3	S	12440*	12590	L,Y	
10835	O	2.3 II	F	2	U	12340*	–	L,Y	
10836	O	8.0	M	1	S	12490	–	Y	
10837	O	8.0	F	1	S	12500	–	Y	
10838	O	8.0	M	2	S	12490	–	Y	
10839	O	8.0	F	2	S	12500	–	Y	
10840	O	4.8	M	3	S	12470	–	Y	
10841	O	4.8	F	3	S	12480	–	Y	
10842	O	2.3 II	M	2	S	12430*	–	L,Y	
10843	O	2.3 II	F	2	S	12440*	12590	L,Y	
10844	O	4.8	F	2	S	12480	–	Y	
		2.3 II		2		12440*	12590	L,Y	

HOUSING PART NUMBER LIST

Part No. of Connector Body	Supply	Terminal	Male Female	Cav. No.	Sealing Ability	Part No. of Repair Wire		Sleeve Color	Memo
						160 mm Type	500 mm Type		
90980–						82998–	82998–		
10845	O	2.3 II	F	3	S	12440*	12590	L,Y	
10846	X	2.3	F	2	S	12270*	12600	L	
10847	X	2.3	F	2	S	12270*	12600	L	
10848	O	2.3 II	F	16	U	12340*	–	L,Y	
10849	X	2.3 II	M	2	U	12330*	–	L,Y	
10850	O	2.3 II	F	2	U	12340*	–	L,Y	
10851	X	2.3 II	M	14	U	–	–	–	PCB
10852	O	2.3 II	F	14	U	12340*	–	L,Y	
10853	X	2.3 II	F	2	S	12440*	12590	L,Y	
10854	O	2.3 II	F	6	S	12440*	12590	L,Y	
10855	O	2.3 II	F	2	U	12340*	–	L,Y	
10856	O	2.3 II 8.0	M	18 1	U	12330* 12390	– –	L,Y Y	
10857	O	2.3 II 8.0	F	18 1	U	12340* 12400	– –	L,Y Y	
10858	O	2.3 II	M	4	U	12330*	–	L,Y	
10859	O	2.3 II	M	2	U	12330*	–	L,Y	
10860	O	2.3 II	F	2	U	12340*	–	L,Y	
10861	O	4.8	M	10	U	12370	–	Y	
10862	O	4.8	F	10	U	12380	–	Y	
10863	X	2.3 II	M	18	U	–	–	–	PCB
10864	O	2.3 II	M	12	U	–	–	–	PCB
10865	X	2.3 II	M	10	U	–	–	–	PCB
10866	O	8.0	M	4	U	12390	–	Y	
10867	O	8.0	F	4	U	12400	–	Y	
10868	O	2.3 II	M	4	S	12430*	–	L,Y	
10869	O	2.3 II	F	4	S	12440*	12590	L,Y	
10870	O	2.3 II	M	1	U	12330*	–	L,Y	w/o Clamp
10871	O	2.3 II	F	1	U	12340*	–	L,Y	
10872	O	4.8 2.3 II	M	7 4	U	12370 12330*	– –	Y L,Y	
10873	O	4.8 2.3 II	F	7 4	U	12380 12340*	– –	Y L,Y	
10874	O	2.3 II	M	16	U	–	–	–	PCB
10875	O	2.3 II	F	22	U	12340*	–	L,Y	
10876	O	4.8 2.3 II	M	3 5	U	12370 12330*	– –	Y L,Y	
10877	O	4.8 2.3 II	F	3 5	U	12380 12340*	– –	Y L,Y	

HOUSING PART NUMBER LIST

Part No. of Connector Body	Supply	Terminal	Male Female	Cav. No.	Sealing Ability	Part No. of Repair Wire		Sleeve Color	Memo
						160 mm Type	500 mm Type		
90980–						82998–	82998–		
10878	O	4.8	M	2	U	12370	–	Y	
		2.3 II		10		12330*	–	L,Y	
10879	O	4.8	F	2	U	12380	–	Y	
		2.3 II		10		12340*	–	L,Y	
10880	O	4.8	M	4	U	12370	–	Y	
		2.3 II		20		12330*	–	L,Y	
10881	O	4.8	F	4	U	12380	–	Y	
		2.3 II		20		12340*	–	L,Y	
10882	O	4.8	M	1	U	12370	–	Y	
		2.3 II		18		12330*	–	L,Y	
10883	O	4.8	F	1	U	12380	–	Y	
		2.3 II		18		12340*	–	L,Y	
10884	O	4.8	M	4	U	12370	–	Y	
		2.3 II		12		12330*	–	L,Y	
10885	O	4.8	F	4	U	12380	–	Y	
		2.3 II		12		12340*	–	L,Y	
10886	O	2.3 II	M	2	S	12430*	–	L,Y	
10887	O	2.3 II	F	2	S	12440*	12590	L,Y	
10888	O	4.8	F	2	U	12380	–	Y	
		8.0		3		12400	–	Y	
10889	O	4.8	F	4	U	12380	–	Y	
		8.0		2		12400	–	Y	
10890	O	2.3 II	M	8	S	12430*	–	L,Y	
10891	O	2.3 II	F	8	S	12440*	12590	L,Y	
10892	O	2.3 II	M	1	S	12430*	–	L,Y	
10893	O	2.3 II	F	1	S	12440*	12590	L,Y	
10894	O	4.8	M	2	S	12470	–	Y	
		2.3 II		6		12430*	–	L,Y	
10895	O	4.8	F	2	S	12480	–	Y	
		2.3 II		6		12440*	12590	L,Y	
10896	O	2.3 II	M	8	S	12430*	–	L,Y	
10897	O	2.3 II	F	8	S	12440*	12590	L,Y	
10898	O	2.3 II	M	2	S	12430*	–	L,Y	
10899	O	2.3 II	F	2	S	12440*	12590	L,Y	
10900	O	2.3 II	M	2	S	12430*	–	L,Y	
10901	O	2.3 II	F	2	S	12440*	12590	L,Y	
10902	O	2.3 II	F	3	S	12440*	12590	L,Y	
10903	O	8.0	F	2	U	12400	–	Y	
10904	O	2.3 II	F	4	U	12340*	–	L,Y	

HOUSING PART NUMBER LIST

Part No. of Connector Body	Supply	Terminal	Male Female	Cav. No.	Sealing Ability	Part No. of Repair Wire		Sleeve Color	Memo
						160 mm Type	500 mm Type		
90980–						82998–	82998–		
10905	O	2.3 II	M	2	U	12330*	–	L,Y	
10906	O	2.3 II	F	2	U	12340*	–	L,Y	
10907	O	2.3 II	M	3	U	12330*	–	L,Y	
10908	O	2.3 II	F	3	U	12340*	–	L,Y	
10909	O	2.3 II 8.0	M	4 2	U	12330* 12390	– –	L,Y Y	
10910	O	2.3 II 8.0	F	4 2	U	12340* 12400	– –	L,Y Y	
10911	O	4.8	F	1	U	12380	–	Y	
10912	O	4.8	F	1	U	12380	–	Y	
10913	X	6.3	F	1	U	12060	12580	Y	
10914	X	6.3	F	1	U	12060	12580	Y	
10915	O	4.8	M	2	U	12370	–	Y	
10916	O	4.8	F	2	U	12380	–	Y	
10917	X	1.8 1.0	M	8 18	U	– –	– –	– –	PCB
10918	X	1.8 1.0	F	8 18	U	12190* 12310*	– –	L L	
10919	O	2.3 II	F	3	S	12440*	12590	L,Y	
10920	O	1.3 2.3 II	M	19 4	U	12410 12330*	– –	L L,Y	
10921	O	1.3 2.3 II	F	19 4	U	12420 12340*	– –	L L,Y	
10923	O	2.3 II	F	2	S	12440*	12590	L,Y	
10924	X	1.8 1.0	M	16 10	U	– –	– –	– –	PCB
10925	O	1.8 1.0	F	10 16	U	12190* 12310*	– –	L L	
10926	O	4.8	F	8	U	12380	–	Y	
10927	O	4.8	M	2	S	12470	–	Y	
10928	O	4.8	F	2	S	12480	–	Y	
10929	X	1.8	F	4	S	12620	–	L	
10930	O	2.3 II	M	7	S	12430*	–	L,Y	
10931	O	2.3 II	F	7	S	12440*	12590	L,Y	
10932	O	4.8 2.3 II	F	2 10	U	12380 12340*	– –	Y L,Y	
10933	O	2.3 II	F	6	U	12340*	–	L,Y	
10934	O	2.3 II	M	2	U	12330*	–	L,Y	
10935	O	2.3 II	F	2	U	12340*	–	L,Y	

HOUSING PART NUMBER LIST

Part No. of Connector Body	Supply	Terminal	Male Female	Cav. No.	Sealing Ability	Part No. of Repair Wire		Sleeve Color	Memo
						160 mm Type	500 mm Type		
90980–						82998–	82998–		
10936	X	2.3 II	M	20	U	–	–	–	PCB
10937	X	2.3 II	M	18	U	–	–	–	PCB
10938	X	2.3 II	M	12	U	–	–	–	PCB
10939	O	4.8 2.3 II	F	2 4	S	12480 12440*	– 12590	Y L,Y	
10940	O	4.8 2.3 II	F	2 2	S	12480 12440*	– 12590	Y L,Y	
10941	O	2.3 II	M	4	S	12430*	–	L,Y	
10942	O	2.3 II	F	4	S	12440*	12590	L,Y	
10943	O	2.3 II	F	4	S	12440*	12590	L,Y	
10944	O	4.8	M	3	S	12470	–	Y	
10945	O	4.8 2.3 II	M	2 3	S	12470 12430*	– –	Y L,Y	
10946	O	4.8 2.3 II	F	2 3	S	12480 12440*	– 12590	Y L,Y	
10947	O	2.3 II	F	2	S	12440*	12590	L,Y	
10948	O	2.3 II	M	2	S	12430*	–	L,Y	
10949	O	2.3 II	F	2	S	12440*	12590	L,Y	
10950	X	2.3 II	F	88	U	12340*	–	L,Y	
10951	X	2.3 II	M	52	U	12330*	–	L,Y	
10952	X	4.8 8.0	F	12 8	U	12380 12400	– –	Y Y	
10953	X	4.8 8.0	F	18 4	U	12380 12400	– –	Y Y	
10954	X	4.8 8.0	M	18 6	U	12370 12390	– –	Y Y	
10955	X	4.8 8.0	F	18 6	U	12380 12400	– –	Y Y	
10956	O	8.0	F	3	U	12400	–	Y	
10957	O	2.3 II	F	6	U	12340*	–	L,Y	
10958	O	8.0	M	2	U	12390	–	Y	
10959	O	2.3 II	M	2	S	12430*	–	L,Y	
10960	X	MIR-ROR	F	2	U	–	–	–	
10961	X	2.3 II	M	10	U	–	–	–	PCB
10962	O	2.3 II	F	2	U	12340*	–	L,Y	
10963	O	4.8	M	8	U	12370	–	Y	
10964	O	2.3 II	F	6	U	12340*	–	L,Y	
10965	O	2.3 II	F	10	U	12340*	–	L,Y	

HOUSING PART NUMBER LIST

Part No. of Connector Body	Supply	Terminal	Male Female	Cav. No.	Sealing Ability	Part No. of Repair Wire		Sleeve Color	Memo
						160 mm Type	500 mm Type		
90980–						82998–	82998–		
10966	O	2.3 II	F	11	U	12340*	–	L,Y	
10967	O	2.3 II	F	12	U	12340*	–	L,Y	
10968	O	2.3 II	F	12	U	12340*	–	L,Y	
10969	X	1.8 1.0	M	10 32	U	– –	– –	– –	PCB
10970	X	7.7	M	2	S	–	–	–	
10971	X	2.3 II	M	14	U	–	–	–	PCB
10972	X	1.8 1.0	M	22 32	U	– –	– –	– –	PCB
10973	O	1.8	F	12	U	12190*	–	L	
10974	O	2.3 II	F	2	S	12440*	12590	L,Y	
10975	O	4.8	M	6	U	12370	–	Y	
10976	O	4.8	F	6	U	12380	–	Y	
10977	O	2.3 II	M	22	U	12330*	–	L,Y	
10978	O	1.8 1.0	M	16 10	U	– –	– –	– –	PCB
10979	X	4.8	M	3	U	12370	–	Y	
10980	O	4.8	F	3	U	12380	–	Y	
10981	O	2.3 II	F	3	S	12440*	12590	L,Y	
10982	O	4.8	M	1	S	12470	–	Y	
10983	O	4.8	F	1	S	12480	–	Y	
10984	X	2.3	M	6	S	12260*	–	L	w/o Clamp
10985	O	4.8 2.3 II	M	1 4	U	12370 12330*	– –	Y L,Y	
10986	O	4.8 2.3 II	F	1 4	U	12380 12340*	– –	Y L,Y	
10987	O	2.3 II	M	6	S	12430*	–	L,Y	
10988	O	2.3 II	F	6	S	12440*	12590	L,Y	
10989	O	4.8	M	4	S	12470	–	Y	
10990	O	4.8	F	4	S	12480	–	Y	
10991	X	1.8 1.0	M	18 16	U	– –	– –	– –	PCB
10992	X	4.8 2.3 II	M	4 6	U	– –	– –	– –	PCB
10993	O	4.8 2.3 II	F	4 6	U	12380 12340*	– –	Y L,Y	
10994	O	8.0	M	1	U	12390	–	Y	
10995	O	8.0	F	1	U	12400	–	Y	
10996	O	2.3 II	F	6	U	12340*	–	L,Y	

HOUSING PART NUMBER LIST

Part No. of Connector Body	Supply	Terminal	Male Female	Cav. No.	Sealing Ability	Part No. of Repair Wire		Sleeve Color	Memo
						160 mm Type	500 mm Type		
90980– 10997	O	2.3 II	F	10	U	82998– 12340*	82998– –	L,Y	
10998	O	2.3 II	M	6	U	12330*	–	L,Y	
11001	O	2.3 II	F	6	U	12340*	–	L,Y	
11002	O	2.3 II	M	2	S	12430*	–	L,Y	
11003	O	2.3 II	F	2	S	12440*	12590	L,Y	
11004	O	2.3 II	M	2	S	12430*	–	L,Y	
11005	O	2.3 II	F	2	S	12440*	12590	L,Y	
11006	O	2.3 II	M	1	S	12430*	–	L,Y	
11007	O	2.3 II	F	1	S	12440*	12590	L,Y	
11008	O	2.3 II	M	2	S	12430*	–	L,Y	
11009	O	2.3 II	F	2	S	12440*	12590	L,Y	
11010	O	2.3 II	M	6	U	12330*	–	L,Y	
11011	O	2.3 II	F	6	U	12340*	–	L,Y	
11012	O	2.3 II	M	4	U	12330*	–	L,Y	
11013	O	2.3 II	F	4	U	12340*	–	L,Y	
11014	X	6.3	M	2	U	12050	–	Y	
11015	O	2.3 II	M	3	S	12430*	–	L,Y	
11016	O	2.3 II	F	3	S	12440*	12590	L,Y	
11017	X	1.8	M	18	U	–	–	–	PCB
11018	X	1.8	M	42	U	–	–	–	PCB
11019	O	2.3 II	F	2	S	12440*	12590	L,Y	
11020	O	2.3 II	F	3	S	12440*	12590	L,Y	
11021	O	4.8 2.3 II	M	2 3	S	12470 12430*	– –	Y L,Y	
11022	O	4.8 2.3 II	F	2 3	S	12480 12440*	– 12590	Y L,Y	
11023	O	2.3 II	M	4	U	12330*	–	L,Y	
11024	O	2.3 II	F	5	S	12440*	12590	L,Y	
11025	O	2.3 II	F	2	S	12440*	12590	L,Y	
11026	O	2.3 II	M	1	U	12330*	–	L,Y	w/ Clamp
11027	O	2.3 II	M	4	S	12430*	–	L,Y	
11028	O	2.3 II	F	4	S	12440*	12590	L,Y	
11029	O	2.3 II	M	2	S	12430*	–	L,Y	
11030	O	2.3 II	F	2	S	12440*	12590	L,Y	
11031	O	8.0	M	2	S	12490	–	Y	
11032	O	8.0	F	2	S	12500	–	Y	
11033	O	2.3 II	M	6	S	12430*	–	L,Y	
11034	O	2.3 II	F	6	S	12440*	12590	L,Y	
11035	O	4.8	M	4	S	12470	–	Y	

HOUSING PART NUMBER LIST

Part No. of Connector Body	Supply	Terminal	Male Female	Cav. No.	Sealing Ability	Part No. of Repair Wire		Sleeve Color	Memo
						160 mm Type	500 mm Type		
90980– 11036	O	4.8	F	4	S	82998– 12480	82998– –	Y	
11037	O	2.3 II	F	4	S	12440*	12590	L,Y	
11038	O	2.3 II	F	2	S	12440*	12590	L,Y	
11039	X	1.8 1.0	M	16 18	U	– –	– –	– –	PCB
11040	X	1.3 2.3 II	M	47 4	U	– –	– –	– –	PCB
11041	O	1.3	F	11	U	12420	–	L	
11042	O	1.3 2.3 II	F	11 4	U	12420 12340*	– –	L L,Y	
11043	O	1.3	F	25	U	12420	–	L	
11044	O	4.8 8.0	M	2 1	S	12470 12490	– –	Y Y	
11045	O	4.8 8.0	F	2 1	S	12480 12500	– –	Y Y	
11046	X	2.3 II	M	17	U	12330*	–	L,Y	
11049	O	2.3 II	F	5	S	12440*	12590	L,Y	
11050	O	2.3 II	M	2	S	12430*	–	L,Y	
11051	O	2.3 II	F	2	S	12440*	12590	L,Y	
11052	O	1.3	M	3	U	12410	–	L	
11053	O	1.3	F	3	U	12420	–	L	
11054	X	1.3 2.3 II	M	55 8	U	– –	– –	– –	PCB
11055	O	1.3	F	25	U	12420	–	L	
11056	O	1.3 2.3 II	F	11 4	U	12420 12340*	– –	L L,Y	
11057	X	1.3 2.3 II	M	21 4	U	– –	– –	– –	PCB
11058	O	1.3 2.3 II	F	21 4	U	12420 12340*	– –	L L,Y	
11059	X	1.8 1.0	M	18 16	U	– –	– –	– –	PCB
11060	O	2.3 II	M	2	U	12330*	–	L,Y	
11061	X	1.8	F	2	S	12620	–	L	
11062	O	1.8	F	2	S	12620	–	L	
11063	O	1.3	M	4	S	12630	–	L	Outer
11064	O	1.3	M	4	S	12630	–	L	Inner
11065	O	1.3	F	4	S	12650	–	L	Outer
11066	O	1.3	F	4	S	12650	–	L	Inner

HOUSING PART NUMBER LIST

Part No. of Connector Body	Supply	Terminal	Male Female	Cav. No.	Sealing Ability	Part No. of Repair Wire		Sleeve Color	Memo
						160 mm Type	500 mm Type		
90980–11067	X	2.3 II	M	6	U	82998– –	82998– –	–	PCB
11068	O	2.3 II	F	2	S	12440*	12590	L,Y	
11069	O	2.3 II	M	2	S	12430*	–	L,Y	
11070	O	2.3 II	F	2	S	12440*	12590	L,Y	
11071	O	2.3 II	F	3	U	12340*	–	L,Y	
11072	O	2.3 II	M	2	S	12430*	–	L,Y	
11073	O	2.3 II	M	2	S	12430*	–	L,Y	w/o Clamp
11074	O	2.3 II	M	2	S	12430*	–	L,Y	w/ Clamp
11075	O	2.3 II	F	2	S	12440*	12590	L,Y	
11076	X	TNS	M	4	S	–	–	–	w/ Clamp
11077	O	2.3 II	F	5	S	12440*	12590	L,Y	
11078	O	2.3 II	M	5	S	12430*	–	L,Y	
11079	O	2.3 II	F	3	U	12340*	–	L,Y	
11080	O	2.3 II	F	2	U	12340*	–	L,Y	
11081	X	1.8 1.0	M	10 32	U	– –	– –	– –	PCB
11082	X	1.0	F	16	U	12310*	–	L	
11083	O	1.3	F	11	U	12420	–	L	
11084	X	1.3 2.3 II	M	30 4	U	– –	– –	– –	PCB
11085	O	2.3 II	M	5	U	12330*	–	L,Y	
11086	O	2.3 II	M	12	S	12430*	–	L,Y	
11087	O	2.3 II	F	12	S	12440*	12590	L,Y	
11088	O	1.3	M	15	S	12630	–	L	
11089	O	1.3	F	15	S	12650	–	L	
11090	O	2.3 II	F	4	U	12340*	–	L,Y	
11091	O	4.8	F	6	U	12380	–	Y	
11092	O	4.8	F	8	U	12380	–	Y	
11093	O	4.8	M	2	U	12370	–	Y	
11094	O	4.8	F	2	U	12380	–	Y	
11095	O	HEAD-LAMP	F	2	S	24150	24190	L,Y	
11096	O	HEAD-LAMP	F	2	S	24150	24190	L,Y	
11097	O	2.3 II	M	1	U	12330*	–	L,Y	w/ Clamp
11098	O	2.3 II	F	2	U	12340*	–	L,Y	
11099	O	2.3 II	M	6	U	12330*	–	L,Y	
11100	O	2.3 II	M	4	U	12330*	–	L,Y	
11101	O	2.3 II	M	6	U	12330*	–	L,Y	
11102	O	2.3 II	M	10	U	12330*	–	L,Y	

HOUSING PART NUMBER LIST

Part No. of Connector Body	Supply	Terminal	Male Female	Cav. No.	Sealing Ability	Part No. of Repair Wire		Sleeve Color	Memo
						160 mm Type	500 mm Type		
90980– 11103	X	1.8 1.0	M	8 18	U	82998– –	82998– –	– –	PCB
11104	X	2.3 II	M	20	U	–	–	–	PCB
11105	X	2.3 II	M	12	U	–	–	–	PCB
11106	X	1.3	M	4	U	–	–	–	PCB
11107	O	1.3	F	4	U	12420	–	L	
11108	X	HEAD-LAMP	F	3	S	24150	24190	L,Y	
11110	O	2.3 II	M	6	U	12330*	–	L,Y	
11111	O	–	–	–	–	–	–	–	
11113	O	SFPC	F	16	U	24180	–	L	
11114	O	SFPC	F	13	U	24180	–	L	
11115	O	SFPC	F	13	U	24180	–	L	
11116	O	SFPC	F	10	U	24180	–	L	
11117	X	2.3 II	M	20	U	–	–	–	PCB
11118	O	4.8 2.3 II	F	2 2	U	12380 12340*	– –	Y L,Y	
11119	X	1.3	M	21	U	–	–	–	PCB
11120	X	1.3 2.3 II	M	19 4	U	– –	– –	– –	PCB
11121	O	2.3 II	F	12	U	12340*	–	L,Y	
11122	O	2.3 II	M	4	S	12430*	–	L,Y	
11123	X	2.3 II	M	8	U	–	–	–	PCB
11124	X	1.8	M	30	U	–	–	–	PCB
11125	O	1.3	F	21	U	12420	–	L	
11126	O	4.8 2.3 II	M	2 2	U	12370 12330*	– –	Y L,Y	
11127	O	2.3 II	M	18	U	–	–	–	PCB
11128	X	1.8 1.0	M	16 60	U	– –	– –	– –	PCB
11129	O	1.0	F	12	U	12310*	–	L	
11130	O	4.8 2.3 II	F	2 6	U	12380 12340*	– –	Y L,Y	
11131	O	2.3 II	M	3	S	12430*	–	L,Y	
11132	O	2.3 II	F	3	S	12440*	12590	L,Y	
11133	O	1.3	M	25	U	12410	–	L	
11134	O	2.3 II	M	8	U	–	–	–	PCB
11135	O	4.8	M	4	U	12370	–	Y	
11136	O	4.8	F	4	U	12380	–	Y	

HOUSING PART NUMBER LIST

Part No. of Connector Body	Supply	Terminal	Male Female	Cav. No.	Sealing Ability	Part No. of Repair Wire		Sleeve Color	Memo
						160 mm Type	500 mm Type		
90980–11137	O	2.3 II	M	2	S	82998–12430*	82998– –	L,Y	
11138	O	4.8 8.0	M	2 2	S	12470 12490	– –	Y Y	
11139	O	4.8 8.0	F	2 2	S	12480 12500	– –	Y Y	
11140	O	2.3 II	F	2	S	12440*	12590	L,Y	
11141	O	2.3 II	M	2	S	12430*	–	L,Y	
11142	O	2.3 II	F	2	S	12440*	12590	L,Y	
11143	O	2.3 II	F	3	S	12440*	12590	L,Y	
11144	O	2.3 II	F	6	S	12440*	12590	L,Y	
11145	O	2.3 II	F	3	S	12440*	12590	L,Y	
11146	O	2.3 II	M	1	U	12330*	–	L,Y	
11147	O	2.3 II	F	1	U	12340*	–	L,Y	
11148	O	2.3 II	F	2	U	12340*	–	L,Y	
11149	O	2.3 II	F	2	S	12440*	12590	L,Y	
11150	O	2.3 II	F	4	S	12440*	12590	L,Y	
11151	O	2.3 II	F	12	S	12440*	12590	L,Y	
11152	O	2.3 II	F	4	S	12440*	12590	L,Y	
11153	O	2.3 II	F	2	S	–	12790*	L,Y	
11154	O	2.3 II	F	2	S	–	12790*	L,Y	
11155	O	2.3 II	M	2	S	12430*	–	L,Y	
11156	O	2.3 II	F	2	S	12440*	12590	L,Y	
11157	X	2.3 II	F	3	S	12440*	12590	L,Y	
11158	O	1.3 2.3 II	M	21 4	U	12410 12330*	– –	L L,Y	
11159	O	2.3 II	M	2	U	12330*	–	L,Y	
11160	O	4.8 2.3 II	M	1 2	S	12470 12430*	– –	Y L,Y	
11161	O	4.8 2.3 II	F	1 2	S	12480 12440*	– 12590	Y L,Y	
11162	O	2.3 II	F	2	S	12440*	12590	L,Y	
11163	O	2.3 II	F	2	S	12440*	12590	L,Y	
11164	X	1.3	M	7	U	–	–	–	PCB
11165	O	1.3	F	7	U	12420	–	L	
11166	O	2.3 II	F	1	S	12440*	12590	L,Y	
11167	O	2.3 II	M	16	U	12330*	–	L,Y	
11168	O	2.3 II	M	2	S	12430*	–	L,Y	
11169	O	1.3	M	3	S	12630	–	L	
11170	O	1.3	F	3	S	12650	–	L	

HOUSING PART NUMBER LIST

Part No. of Connector Body	Supply	Terminal	Male Female	Cav. No.	Sealing Ability	Part No. of Repair Wire		Sleeve Color	Memo
						160 mm Type	500 mm Type		
90980–						82998–	82998–		
11171	O	1.3	M	7	S	12630	–	L	
11172	O	1.3	F	7	S	12650	–	L	
11173	O	1.3	M	11	S	12630	–	L	
11174	O	1.3	F	11	S	12650	–	L	
11175	O	2.3 II	M	2	S	12430*	–	L,Y	
11176	O	2.3 II	F	2	S	12440*	12590	L,Y	
11177	O	2.3 II	M	4	S	12430*	–	L,Y	
11178	O	2.3 II	F	4	S	12440*	12590	L,Y	
11179	O	1.3	F	15	U	12420	–	L	
11180	X	1.3	M	15	U	–	–	–	PCB
11181	O	1.3	M	5	S	12630	–	L	
11182	O	1.3	F	5	S	12650	–	L	
11183	O	8.0	M	1	S	12490	–	Y	
11184	O	8.0	F	1	S	12500	–	Y	
11186	O	1.3	M	4	U	12410	–	L	
11187	O	1.3	F	4	U	12420	–	L	
11188	O	1.3	M	2	S	12630	–	L	
11189	O	1.3	F	2	S	12650	–	L	
11190	O	2.3 II	F	8	S	12440*	12590	L,Y	
11191	O	1.3	M	9	S	12630	–	L	
11192	O	1.3	F	9	S	12650	–	L	
11193	O	2.3 II	M	6	S	12430*	–	L,Y	
11194	O	2.3 II	F	6	S	12440*	12590	L,Y	
11195	O	2.3 II	F	22	S	12440*	12590	L,Y	
		2.3 II		22	U	12340*	–	L,Y	
		6.3 II		1	S	24160	–	L	
11196	O	2.3 II	M	6	S	12430*	–	L,Y	
11197	O	2.3 II	F	6	S	12440*	12590	L,Y	
11198	X	1.3	M	13	U	–	–	–	PCB
11199	X	1.3	F	13	U	12420	–	L	
11200	X	1.3	M	11	U	12410	–	L	
11201	X	1.3	M	15	U	12410	–	L	
11202	X	1.3	M	17	U	12410	–	L	
11203	X	1.3	F	17	U	12420	–	L	
11204	X	1.3	M	15	U	12410	–	L	
		2.3 II		4		12330*	–	L,Y	
11205	X	1.3	F	15	U	12420	–	L	
		2.3 II		4		12340*	–	L,Y	
11206	X	1.3	M	21	U	12410	–	L	

HOUSING PART NUMBER LIST

Part No. of Connector Body	Supply	Terminal	Male Female	Cav. No.	Sealing Ability	Part No. of Repair Wire		Sleeve Color	Memo
						160 mm Type	500 mm Type		
90980– 11207	O	2.3 II	F	2	S	82998– 12440*	82998– 12590	L,Y	
11208	O	1.3 2.3 II	M	19 4	U	12410 12330*	– –	L L,Y	
11211	O	1.3	M	2	U	12410	–	L	
11212	O	1.3	F	2	U	12420	–	L	
11213	X	1.0	M	120	S	–	–	–	PCB
11214	O	1.0	F	80	S	–	–	–	
11215	O	1.0	F	40	S	–	–	–	
11216	O	–	–	–	–	–	–	–	
11217	X	1.0 II	M	100	U	–	–	–	PCB
11218	O	1.0 II	F	28	U	24020*	–	L	
11219	O	1.0 II	F	16	U	24020*	–	L	
11220	O	1.0 II	F	22	U	24020*	–	L	
11221	O	1.0 II	F	34	U	24020*	–	L	
11222	O	1.0 II 1.8 II 1.8 II	M	18 14 14	U	24010 24030 24090	– – –	L L,Y L,Y	
11223	O	1.0 II 1.8 II 1.8 II	M	12 6 6	U	24010 24030 24090	– – –	L L,Y L,Y	
11224	O	1.0 II 1.8 II 1.8 II	F	12 6 6	U	24020* 24040 24100*	– – –	L L,Y L,Y	
11225	O	1.0 II 1.8 II 1.8 II	F	6 8 8	U	24020* 24040 24100*	– – –	L L,Y L,Y	
11226	O	1.0 II 1.8 II 1.8 II	F	12 6 6	U	24020* 24040 24100*	– – –	L L,Y L,Y	
11227	O	2.3 II	F	2	U	12340*	–	L,Y	
11228	O	1.8 1.0	M	18 16	U	– –	– –	– –	PCB
11229	X	2.3 II	M	3	U	–	–	–	PCB
11230	X	2.3 II	M	5	U	–	–	–	PCB
11231	O	2.3 II	F	10	S	12440*	12590	L,Y	
11232	O	2.3 II	F	5	S	12440*	12590	L,Y	
11233	X	1.8 1.0	M	4 22	U	– –	– –	– –	PCB

HOUSING PART NUMBER LIST

Part No. of Connector Body	Supply	Terminal	Male Female	Cav. No.	Sealing Ability	Part No. of Repair Wire		Sleeve Color	Memo
						160 mm Type	500 mm Type		
90980– 11234	X	1.8 1.0	F	4 22	U	82998– 12190* 12310*	82998– – –	L L	
11235	O	2.3 II	F	2	S	12440*	12590	L,Y	
11236	X	4.8	M	2	S	12470	–	Y	
11237	O	4.8	F	2	S	12480	–	Y	
11238	X	2.3 II	F	22	U	12340*	–	L,Y	
11239	O	4.8 2.3 II	M	3 8	S	12470 12430*	– –	Y L,Y	
11240	O	4.8 2.3 II	F	3 8	S	12480 12440*	– 12590	Y L,Y	
11241	O	2.3 II 8.0	M	6 2	S	12430* 12490	– –	L,Y Y	
11242	O	2.3 II 8.0	F	6 2	S	12440* 12500	12590 –	L,Y Y	
11243	O	2.3 II	F	1	S	12440*	12590	L,Y	
11244	O	2.3 II	M	3	S	12430*	–	L,Y	w/ Clamp
11245	O	2.3 II	F	3	S	12440*	12590	L,Y	
11246	O	2.3 II	F	2	S	12440*	12590	L,Y	
11247	O	2.3 II	M	2	S	12430*	–	L,Y	
11248	O	2.3 II	F	2	S	12440*	12590	L,Y	
11249	X	2.3 II	M	2	S	12430*	–	L,Y	
11250	O	2.3 II	F	2	S	12440*	12590	L,Y	
11251	X	2.3 II	F	3	U	12340*	–	L,Y	
11252	O	2.3 II	F	1	S	12440*	12590	L,Y	
11253	X	1.0 III 1.0 III	M	5 52	U	– –	– –	– –	PCB
11254	X	2.3 II	M	2	S	12430*	–	L,Y	
11255	O	2.3 II	F	2	S	12440*	12590	L,Y	
11256	X	1.3	M	11	S	12630	–	L	
11257	X	1.3	F	11	S	12650	–	L	
11258	O	4.8	M	1	U	12370	–	Y	
11259	O	4.8	F	1	U	12380	–	Y	
11260	X	2.3 II	F	20	U	12340*	–	L,Y	
11261	O	2.3 II	F	3	S	12440*	12590	L,Y	
11262	X	1.3	M	4	S	12630	–	L	Outer
11263	X	1.3	M	15	U	–	–	–	PCB
11264	O	1.3	F	15	U	12420	–	L	
11265	X	2.3 II	M	14	U	–	–	–	PCB

HOUSING PART NUMBER LIST

Part No. of Connector Body	Supply	Terminal	Male Female	Cav. No.	Sealing Ability	Part No. of Repair Wire		Sleeve Color	Memo
						160 mm Type	500 mm Type		
90980– 11266	X	1.8 1.0	M	10 32	U	82998– – –	82998– – –	– –	PCB
11267	X	4.8 2.3 II	M	2 4	S	12470 12430*	– –	Y L,Y	
11268	X	2.3 II	M	4	S	12430*	–	L,Y	
11269	X	2.3 II	F	4	S	12440*	12590	L,Y	
11270	O	2.3 II	M	1	S	12430*	–	L,Y	
11271	O	2.3 II	F	1	S	12440*	12590	L,Y	
11272	O	2.3 II	M	2	S	12430*	–	L,Y	
11273	O	2.3 II	F	2	S	12440*	12590	L,Y	
11274	O	–	–	–	–	–	–	–	
11276	X	4.8	F	10	U	12380	–	Y	
11277	X	4.8 2.3 II	F	1 8	U	12380 12340*	– –	Y L,Y	
11278	O	2.3 II	F	2	U	12340*	–	L,Y	
11279	O	4.8 2.3 II	F	2 6	U	12380 12340*	– –	Y L,Y	
11280	O	2.3 II	F	6	U	12340*	–	L,Y	
11281	X	1.0 III 1.0 IV	M	98 24	U	– –	– –	– –	PCB
11282	X	2.3 II	F	1	S	12440*	12590	L,Y	
11283	X	4.8 2.3 II	F	2 2	S	12480 12440*	– 12590	Y L,Y	
11284	O	2.3 II	F	2	S	–	12790*	L,Y	
11285	O	2.3 II	F	2	S	–	12790*	L,Y	
11286	X	2.3 II	F	2	S	12440*	12590	L,Y	
11287	X	2.3 II 8.0	M	2 2	S	12430* 12490	– –	L,Y Y	
11288	X	2.3 II 8.0	F	2 2	S	12440* 12500	12590 –	L,Y Y	
11289	O	2.3 II	M	6	S	12430*	–	L,Y	
11290	O	2.3 II	F	6	S	12440*	12590	L,Y	
11291	O	2.3 II	M	4	S	12430*	–	L,Y	
11292	O	2.3 II	F	4	S	12440*	12590	L,Y	
11293	X	2.3 II	M	3	S	12430*	–	L,Y	
11294	O	2.3 II	F	3	S	12440*	12590	L,Y	
11295	O	2.3 II	M	3	S	12430*	–	L,Y	w/ Clamp
11296	X	2.3 II	F	3	U	12340*	–	L,Y	
11297	X	4.8	F	6	U	12380	–	Y	

HOUSING PART NUMBER LIST

Part No. of Connector Body	Supply	Terminal	Male Female	Cav. No.	Sealing Ability	Part No. of Repair Wire		Sleeve Color	Memo
						160 mm Type	500 mm Type		
90980–11298	X	2.3 II	M	3	U	82998–12330*	82998– –	L,Y	
11299	O	2.3 II	M	2	U	12330*	–	L,Y	w/ Clamp
11300	O	2.3 II	M	2	U	12330*	–	L,Y	
11301	X	2.3 II	M	4	U	12330*	–	L,Y	
11302	X	4.8	F	9	U	12380	–	Y	
11303	X	2.3 II	M	2	S	12430*	–	L,Y	
11304	O	4.8 2.3 II	F	2 2	S	12480 12440*	– 12590	Y L,Y	
11305	X	1.3	M	2	U	12410	–	L	
11306	X	1.3	F	2	U	12420	–	L	
11307	X	1.3 2.3 II	M	15 4	U	12410 12330*	– –	L L,Y	
11308	X	1.3 2.3 II	F	15 4	U	12420 12340*	– –	L L,Y	
11309	X	1.3 2.3 II	M	13 4	U	12410 12330*	– –	L L,Y	
11310	X	1.3 2.3 II	F	13 4	U	12420 12340*	– –	L L,Y	
11311	O	2.3 II	F	12	U	12340*	–	L,Y	
11312	X	2.3 II	M	14	U	–	–	–	PCB
11313	X	2.3 II	F	4	U	12340*	–	L,Y	
11314	O	HEAD-LAMP	F	3	U	24140	24200	L,Y	
11315	X	2.3 II	F	1	U	12340*	–	L,Y	
11316	X	2.3 II 6.3 II	M	20 1	U	12330* –	– –	L,Y –	
11317	O	2.3 II	F	5	S	12440*	12590	L,Y	
11318	X	1.3	M	5	U	–	–	–	PCB
11319	O	1.3	F	5	U	12420	–	L	
11320	X	1.3	M	8	U	–	–	–	PCB
11321	X	1.3	F	8	U	12420	–	L	
11322	X	2.3 II	M	2	S	12430*	–	L,Y	
11323	O	2.3 II 2.3 II 6.3 II	F	22 22 1	S U S	12440* 12340* 24160	12590 – –	L,Y L,Y L	
11324	X	2.3 II	M	16	U	–	–	–	PCB
11325	X	2.3 II	M	10	U	–	–	–	PCB
11326	X	2.3 II	F	6	U	12340*	–	L,Y	
11327	X	2.3 II	M	5	U	12330*	–	L,Y	

HOUSING PART NUMBER LIST

Part No. of Connector Body	Supply	Terminal	Male Female	Cav. No.	Sealing Ability	Part No. of Repair Wire		Sleeve Color	Memo
						160 mm Type	500 mm Type		
90980–						82998–	82998–		
11328	X	1.3	M	4	S	12630	–	L	Inner
11329	X	1.3	F	4	S	12650	–	L	Outer
11330	X	1.3	F	4	S	12650	–	L	Inner
11331	X	2.3 II	M	10	U	–	–	–	PCB
11332	O	4.8	F	2	S	12480	–	Y	
		2.3 II		8		12440*	12590	L,Y	
11333	X	1.8	M	4	U	12180	–	L	
		1.0		22		–	–	–	
11334	X	1.3	M	17	U	12410	–	L	
11335	X	1.3	F	17	U	12420	–	L	
11336	X	1.3	F	3	U	12420	–	L	
11337	X	2.3 II	M	14	U	–	–	–	PCB
11338	X	1.0	M	80	S	–	–	–	
11339	X	1.3	M	7	U	–	–	–	PCB
11340	X	1.3	F	7	U	12420	–	L	
11341	X	2.3 II	M	3	S	12430*	–	L,Y	
11342	X	1.0	M	40	U	–	–	–	
11343	X	1.0	M	28	U	–	–	–	PCB
11344	X	1.0	M	16	U	–	–	–	
11345	X	1.0	M	22	U	–	–	–	
11346	X	1.0	M	34	U	–	–	–	
11347	X	LA	F	40	U	–	–	–	
11348	O	2.3 II	M	3	S	12430*	–	L,Y	
11349	O	2.3 II	F	3	S	12440*	12590	L,Y	
11350	X	1.3	F	13	U	12420	–	L	
11351	X	2.3 II	M	16	U	–	–	–	PCB
11352	X	1.0 II	M	60	U	–	–	–	PCB
		1.8 II		16		–	–	–	
11353	X	2.3 II	M	8	U	12330*	–	L,Y	
11354	X	2.3 II	F	8	U	12340*	–	L,Y	
11355	X	4.8	M	4	U	12370	–	Y	
		2.3 II		38		12330*	–	L,Y	
		8.0		1		12390	–	Y	
11356	X	4.8	M	4	U	12370	–	Y	
		2.3 II		24		12330*	–	L,Y	
11357	X	2.3 II	M	27	U	12330*	–	L,Y	
11359	X	4.8	F	4	U	12380	–	Y	
		2.3 II		51		12340*	–	L,Y	

HOUSING PART NUMBER LIST

Part No. of Connector Body	Supply	Terminal	Male Female	Cav. No.	Sealing Ability	Part No. of Repair Wire		Sleeve Color	Memo
						160 mm Type	500 mm Type		
90980–						82998–	82998–		
		4.8		4		12380	–	Y	
11360	X	2.3 II	F	38	U	12340*	–	L,Y	
		8.0		1		12400	–	Y	
11361	X	4.8	M	4	U	–	–	–	PCB
		2.3 II		4		–	–	–	
11362	X	4.8	F	4	U	12380	–	Y	
		2.3 II		4		12340*	–	L,Y	
11363	O	2.3 II	F	1	S	12440*	12590	L,Y	
11364	O	1.0 III	M	81	U	–	–	–	PCB
		1.0 IV		24		–	–	–	
11365	X	4.8	M	2	U	–	–	–	PCB
		2.3 II		8		–	–	–	
11366	X	4.8	F	2	U	12380	–	Y	
		2.3 II		8		12340*	–	L,Y	
11367	X	1.3	M	2	U	12410	–	L	
11368	O	1.3	M	2	U	12410	–	L	
11369	O	1.3	F	2	U	12420	–	L	
11370	X	2.3 II	M	15	U	12330*	–	L,Y	
11371	X	2.3 II	M	15	U	12330*	–	L,Y	
11372	X	2.3 II	F	15	U	12340*	–	L,Y	
11373	X	2.3 II	M	25	U	12330*	–	L,Y	
11374	X	2.3 II	M	25	U	12330*	–	L,Y	
11375	X	2.3 II	F	25	U	12340*	–	L,Y	
11376	X	1.3	M	19	U	12410	–	L	
11377	X	1.3	F	19	U	12420	–	L	
11378	X	1.3	M	21	U	12410	–	L	
11379	X	1.3	F	21	U	12420	–	L	
11380	X	1.3	M	23	U	12410	–	L	
11381	X	1.3	F	23	U	12420	–	L	
11382	X	2.3 II	M	14	U	–	–	–	PCB
11383	X	2.3 II	F	14	U	12340*	–	L,Y	
11384	X	1.3	M	13	U	–	–	–	PCB
11385	X	8.0	M	3	U	12390	–	Y	
11386	X	8.0	F	2	U	12400	–	Y	
11387	X	4.8	F	1	U	12380	–	Y	
		8.0		2		12400	–	Y	
11388	X	2.3 II	F	2	U	12340*	–	L,Y	
11389	X	1.3	M	8	U	–	–	–	PCB

HOUSING PART NUMBER LIST

Part No. of Connector Body	Supply	Terminal	Male Female	Cav. No.	Sealing Ability	Part No. of Repair Wire		Sleeve Color	Memo
						160 mm Type	500 mm Type		
90980–						82998–	82998–		
11390	O	1.0 II	F	16	U	24020*	–	L	
		1.8 II		10		24100*	–	L,Y	
11391	O	1.0 II	F	16	U	24020*	–	L	
11392	O	1.0 II	F	16	U	24020*	–	L	
		1.8 II		6		24100*	–	L,Y	
11393	X	1.3	M	13	U	12410	–	L	
11394	X	1.3	F	13	U	12420	–	L	
11395	X	2.3 II	M	2	U	12330*	–	L,Y	
11396	X	2.3 II	F	2	U	12340*	–	L,Y	
11397	X	2.3 II	F	8	U	12340*	–	L,Y	
11398	X	2.3 II	F	4	U	12340*	–	L,Y	
11399	O	2.3 II	M	4	U	12330*	–	L,Y	
11400	O	4.8	F	1	S	12480	–	Y	
11401	X	2.3 II	F	2	S	12440*	12590	L,Y	
11402	X	1.3	M	7	U	–	–	–	PCB
11403	X	1.3	M	25	U	12410	–	L	
11404	X	1.3	F	25	U	12420	–	L	
11405	X	1.8	M	12	U	–	–	–	
		1.0 II		32		–	–	–	PCB
		1.8 II		10		–	–	–	
11406	X	1.0 II	F	22	U	24020*	–	L	
		1.8 II		4		24100*	–	L,Y	
11407	X	2.3 II	M	3	S	12430*	–	L,Y	w/o Clamp
11408	O	1.0 II	F	12	U	24020*	–	L	
11409	X	4.8	M	2	S	12470	–	Y	
11410	O	4.8	F	2	S	12480	–	Y	
11411	X	1.3	M	21	U	–	–	–	PCB
		2.3 II		4		–	–	–	
11412	O	4.8	M	3	S	12470	–	Y	
		2.3 II		2		12430*	–	L,Y	
11413	O	4.8	F	3	S	12480	–	Y	
		2.3 II		2		12440*	12590	L,Y	
11414	X	SL	F	3	S	–	–	–	
11415	X	2.3 II	M	16	U	12330*	–	L,Y	
11416	X	2.3 II	F	16	U	12340*	–	L,Y	
11417	O	2.3 II	F	17	U	12340*	–	L,Y	
11418	X	1.8	M	12	U	–	–	–	
		1.0 II		16		–	–	–	PCB
		1.8 II		10		–	–	–	

HOUSING PART NUMBER LIST

Part No. of Connector Body	Supply	Terminal	Male Female	Cav. No.	Sealing Ability	Part No. of Repair Wire		Sleeve Color	Memo
						160 mm Type	500 mm Type		
90980–11419	X	2.3 II	M	10	U	82998––	82998––	–	PCB
11420	X	2.3	F	17	U	12170	–	L	
11421	O	1.0 III	F	20	U	12690*	–	L	
		1.0 IV		11		12740	–	L	
11422	X	1.0 II	F	18	U	24020*	–	L	
		1.8 II		8		24100*	–	L,Y	
11423	O	1.0 II	F	16	U	24020*	–	L	
		1.8 II		10		24100*	–	L,Y	
11424	O	1.8 II	F	12	U	24100*	–	L,Y	
11425	X	1.0 II	F	16	U	24020*	–	L	
11426	X	2.3 II	M	4	U	–	–	–	PCB
11427	X	2.3 II	F	4	U	12340*	–	L,Y	
11428	O	2.3 II	F	1	S	12440*	12590	L,Y	
11429	X	2.3 II	F	2	U	12340*	–	L,Y	
11430	X	4.8	M	4	U	12370	–	Y	
		2.3 II		40		12330*	–	L,Y	
		8.0		5		12390	–	Y	
11431	X	4.8	F	4	U	12380	–	Y	
		2.3 II		40		12340*	–	L,Y	
		8.0		5		12400	–	Y	
11432	X	1.8 II	F	20	U	24100*	–	L,Y	
11433	O	1.8 II	F	14	U	24040	–	L,Y	
		1.8 II		14		24100*	–	L,Y	
11434	X	C–TYPE	M	16	U	12560	–	L	
11435	X	C–TYPE	F	16	U	12570	–	L	
11436	O	1.3	F	2	U	12420	–	L	
11437	X	2.3 II	F	14	U	12340*	–	L,Y	
11438	X	4.8	M	3	U	12370	–	Y	
		2.3 II		5		12330*	–	L,Y	
11439	X	4.8	F	3	U	12380	–	Y	
		2.3 II		5		12340*	–	L,Y	
11440	X	2.3 II	M	20	U	12330*	–	L,Y	
11441	X	2.3 II	F	20	U	12340*	–	L,Y	
11442	X	2.3 II	M	20	U	12330*	–	L,Y	
11443	X	2.3 II	F	20	U	12340*	–	L,Y	
11444	O	2.3 II	M	16	U	12330*	–	L,Y	
11445	X	2.3 II	F	16	U	12340*	–	L,Y	
11447	X	2.3 II	M	2	S	12430*	–	L,Y	
11448	X	2.3 II	F	2	S	12440*	12590	L,Y	

HOUSING PART NUMBER LIST

Part No. of Connector Body	Supply	Terminal	Male Female	Cav. No.	Sealing Ability	Part No. of Repair Wire		Sleeve Color	Memo
						160 mm Type	500 mm Type		
90980–11449	X	1.3	M	10	U	82998––	82998––	–	PCB
11450	O	1.3	F	10	U	12420	–	L	
11451	O	2.3 II	F	3	S	–	12790*	L,Y	
11452	X	2.3 II	M	6	U	12330*	–	L,Y	
11453	X	2.3 II	F	12	U	12340*	–	L,Y	
11459	X	2.3 II	F	8	U	12340*	–	L,Y	
11460	X	4.8 2.3 II	M	2 6	S	12470 12430*	– –	Y L,Y	
11461	X	4.8 2.3 II	F	2 6	S	12480 12440*	– 12590	Y L,Y	
11462	X	1.3	M	16	S	12630	–	L	
11463	X	1.3	F	16	S	12650	–	L	
11464	X	2.3 II	M	14	U	–	–	–	PCB
11465	X	2.3 II	F	14	U	12340*	–	L,Y	
11466	X	2.3 II	M	2	S	12430*	–	L,Y	
11467	O	2.3 II	F	2	S	12440*	12590	L,Y	
11468	X	1.3	M	22	U	–	–	–	PCB
11469	O	1.3 2.3 II	F	16 4	U	12420 12340*	– –	L L,Y	
11470	X	1.3	M	3	U	12410	–	L	
11471	O	1.3	F	3	U	12420	–	L	
11472	X	1.3 2.3 II	M	30 4	U	– –	– –	– –	PCB
11473	X	1.3 2.3 II	M	21 4	U	– –	– –	– –	PCB
11474	X	1.3	M	12	U	–	–	–	PCB
11475	O	1.3	F	12	U	12420	–	L	
11476	O	1.0 III 1.0 IV	F	17 7	U	12690* 12740	– –	L L	
11477	X	LAC	M	22	U	12100	–	L,Y	
11478	X	LAC	F	13	U	12110	–	L,Y	
11479	X	LAC	F	9	U	12110	–	L,Y	
11483	X	1.3 2.3 II	M	21 4	U	– –	– –	– –	PCB
11484	X	2.3 II 8.0	M	1 2	U	12330* 12390	– –	L,Y Y	
11485	X	2.3 II 8.0	F	1 2	U	12340* 12400	– –	L,Y Y	
11486	O	2.3 II	M	2	S	12430*	–	L,Y	

HOUSING PART NUMBER LIST

Part No. of Connector Body	Supply	Terminal	Male Female	Cav. No.	Sealing Ability	Part No. of Repair Wire		Sleeve Color	Memo
						160 mm Type	500 mm Type		
90980– 11487	X	1.3	M	6	U	82998– 12410	82998– –	L	
11488	X	1.3	F	6	U	12420	–	L	
11489	X	1.3	M	3	U	12410	–	L	
11490	O	1.3	F	3	U	12420	–	L	
11491	X	6.3	F	3	S	12540	–	Y	
11492	X	1.3 2.3 II	M	4 2	U	12410 12330*	– –	L L,Y	
11493	X	1.3 2.3 II	F	4 2	U	12420 12340*	– –	L L,Y	
11494	O	1.3	F	4	U	12420	–	L	
11495	X	1.3	F	4	U	12420	–	L	
11496	X	1.3	M	18	U	–	–	–	PCB
11497	X	1.3	F	18	U	12420	–	L	
11498	X	1.3	M	20	U	12410	–	L	
11499	X	1.3	F	20	U	12420	–	L	
11500	X	1.3	M	12	U	12410	–	L	
11501	O	1.3 2.3 II	M	16 4	U	– –	– –	– –	PCB
11502	O	1.3	F	22	U	12420	–	L	
11503	O	1.3	M	22	U	12410	–	L	
11504	O	1.3 2.3 II	M	16 4	U	12410 12330*	– –	L L,Y	
11505	X	1.3	M	17	U	12410	–	L	
11506	X	1.3	F	17	U	12420	–	L	
11507	X	1.3	M	64	U	–	–	–	PCB
11508	X	1.3	F	40	U	12420	–	L	
11509	X	1.3	F	24	U	12420	–	L	
11510	X	1.3	M	14	U	–	–	–	PCB
11511	X	1.3	F	14	U	12420	–	L	
11512	X	ABS	F	2	U	–	–	–	
11514	X	ABS	F	32	U	–	–	–	
11517	X	ABS	F	6	S	–	–	–	
11519	X	ABS	F	2	S	–	–	–	
11520	X	ABS	F	2	S	–	–	–	
11522	X	ABS	F	4	S	–	–	–	
11524	X	ABS	F	12	U	–	–	–	
11526	X	4.8 2.3 II	M	2 8	U	– –	– –	– –	PCB

HOUSING PART NUMBER LIST

Part No. of Connector Body	Supply	Terminal	Male Female	Cav. No.	Sealing Ability	Part No. of Repair Wire		Sleeve Color	Memo
						160 mm Type	500 mm Type		
90980–						82998–	82998–		
11527	O	4.8	F	2	U	12380	–	Y	
		2.3 II		8		12340*	–	L,Y	
11528	O	2.3 II	M	7	U	12330*	–	L,Y	
11529	O	2.3 II	F	7	U	12340*	–	L,Y	
11530	O	2.3 II	M	12	U	12330*	–	L,Y	
11531	O	2.3 II	F	12	U	12340*	–	L,Y	
11532	O	1.3	M	8	U	12410	–	L	
11533	O	1.3	F	8	U	12420	–	L	
11534	O	2.3 II	M	9	U	12330*	–	L,Y	
11535	O	2.3 II	F	9	U	12340*	–	L,Y	
11536	O	2.3 II	M	10	U	12330*	–	L,Y	
11537	O	2.3 II	F	10	U	12340*	–	L,Y	
11538	O	2.3 II	M	11	U	12330*	–	L,Y	
11539	O	2.3 II	F	11	U	12340*	–	L,Y	
11540	X	2.3 II	F	2	S	12440*	12590	L,Y	
11541	O	2.3 II	M	13	U	12330*	–	L,Y	
11542	O	2.3 II	F	13	U	12340*	–	L,Y	
11543	X	2.3 II	M	9	U	–	–	–	PCB
11544	O	1.3	M	10	U	–	–	–	PCB
11545	X	2.3 II	M	2	U	12330*	–	L,Y	
11546	X	4.8	M	4	U	12370	–	Y	
		2.3 II		12		12330*	–	L,Y	
11547	X	4.8	F	4	U	12380	–	Y	
		2.3 II		12		12340*	–	L,Y	
11548	X	1.8	M	8	U	–	–	–	PCB
		1.0		18		–	–	–	
11549	X	1.8 II	M	34	U	24030	–	L,Y	
		1.8 II		34		24090	–	L,Y	
11550	X	1.8	M	12	U	–	–	–	PCB
11551	X	4.8	M	8	U	12370	–	Y	
11552	O	1.3	F	16	U	12420	–	L	
		2.3 II		22		12340*	–	L,Y	
11553	X	1.3	M	5	U	–	–	–	PCB
11554	X	1.3	M	16	U	12410	–	L	
		2.3 II		22		12330*	–	L,Y	
11555	X	1.3	F	16	U	12420	–	L	
		2.3 II		22		12340*	–	L,Y	
11556	O	1.3	F	14	U	12420	–	L	
11557	X	1.3	M	60	U	–	–	–	PCB

HOUSING PART NUMBER LIST

Part No. of Connector Body	Supply	Terminal	Male Female	Cav. No.	Sealing Ability	Part No. of Repair Wire		Sleeve Color	Memo
						160 mm Type	500 mm Type		
90980–11558	X	1.3	F	20	U	82998–12420	82998– –	L	
11559	X	1.3 2.3 II	M	8 9	U	12410 12330*	– –	L L,Y	
11560	X	1.3 2.3 II	F	8 9	U	12420 12340*	– –	L L,Y	
11561	X	1.3 2.3 II	M	6 10	U	12410 12330*	– –	L L,Y	
11562	X	1.3 2.3 II	F	6 10	U	12420 12340*	– –	L L,Y	
11563	O	1.8 1.0	M	10 32	U	– –	– –	– –	PCB
11564	O	1.0 II 1.8 II	M	26 16	U	– –	– –	– –	PCB
11565	O	1.0 II 1.8 II	F	10 6	U	24020* 24100*	– –	L L,Y	
11566	X	1.0 II	F	40	S	24060	–	L	
11567	X	1.0 II	M	40	S	–	–	–	PCB
11568	X	2.3 II	M	13	U	12330*	–	L,Y	
11569	X	2.3 II 8.0	F	2 2	S	12440* 12500	12590 –	L,Y Y	
11570	O	1.3	M	19	U	12410	–	L	
11571	O	1.3	F	19	U	12420	–	L	
11572	O	1.3	M	52	U	–	–	–	PCB
11573	O	1.3	M	16	U	12410	–	L	
11574	O	1.3	F	16	U	12420	–	L	
11575	O	1.8 1.0	M	22 32	U	– –	– –	– –	PCB
11576	O	1.8 1.0	M	16 48	U	– –	– –	– –	PCB
11577	O	1.8 1.0	M	16 60	U	– –	– –	– –	PCB
11578	O	1.0	M	100	U	–	–	–	PCB
11579	O	8.0	F	2	U	12400	–	Y	
11580	X	1.3	M	10	U	12410	–	L	
11581	X	1.3	F	10	U	12420	–	L	
11582	X	1.3	M	8	U	12410	–	L	
11583	O	4.8	F	6	U	12380	–	Y	
11585	X	2.3 II	M	16	U	–	–	–	PCB
11586	X	1.0 III	F	17	U	12640	–	L	IDC

HOUSING PART NUMBER LIST

Part No. of Connector Body	Supply	Terminal	Male Female	Cav. No.	Sealing Ability	Part No. of Repair Wire		Sleeve Color	Memo
						160 mm Type	500 mm Type		
90980–11587	O	2.3 II	M	6	U	82998–12330*	82998– –	L,Y	
11588	X	1.3	M	8	U	12410	–	L	
11589	X	1.3	M	2	U	–	–	–	PCB
11590	X	1.3 2.3 II	M	8 6	U	12410 12330*	– –	L L,Y	
11591	X	1.3 2.3 II	F	8 6	U	12420 12340*	– –	L L,Y	
11592	O	2.3 II	F	8	S	12440*	12590	L,Y	
11593	X	2.3 II	F	8	S	12440*	12590	L,Y	
11594	O	1.3 2.3 II	F	10 8	U	12420 12340*	– –	L L,Y	
11595	O	1.3 2.3 II	F	10 8	U	12420 12340*	– –	L L,Y	
11596	O	4.8 2.3 II	M	2 8	U	12370 12330*	– –	Y L,Y	
11597	X	1.8 1.0	M	10 32	U	– –	– –	– –	PCB
11598	O	2.3 II	M	5	S	12430*	–	L,Y	
11599	O	2.3 II	F	5	S	12440*	12590	L,Y	
11600	O	4.8 2.3 II 8.0	M	3 12 2	S	12470 12430* 12490	– – –	Y L,Y Y	
11601	X	4.8 2.3 II 8.0	F	3 12 2	S	12480 12440* 12500	– 12590 –	Y L,Y Y	
11602	X	4.8 2.3 II	M	2 3	U	12370 12330*	– –	Y L,Y	
11603	X	4.8 2.3 II	F	2 3	U	12380 12340*	– –	Y L,Y	
11604	O	2.3 II	F	13	U	12340*	–	L,Y	
11605	X	1.3 2.3 II	M	2 2	U	12410 12330*	– –	L L,Y	
11606	X	1.3 2.3 II	F	2 2	U	12420 12340*	– –	L L,Y	
11607	X	2.3 II	M	3	S	12430*	–	L,Y	
11608	O	2.3 II	F	2	U	12340*	–	L,Y	
11609	X	4.8 2.3 II	M	3 8	S	12470 12430*	– –	Y L,Y	

HOUSING PART NUMBER LIST

Part No. of Connector Body	Supply	Terminal	Male Female	Cav. No.	Sealing Ability	Part No. of Repair Wire		Sleeve Color	Memo
						160 mm Type	500 mm Type		
90980–						82998–	82998–		
11610	X	4.8	M	4	U	12370	–	Y	
		2.3 II		22		12330*	–	L,Y	
11611	X	4.8	F	4	U	12380	–	Y	
		2.3 II		22		12340*	–	L,Y	
11612	X	4.8	F	3	S	12480	–	Y	
		2.3 II		8		12440*	12590	L,Y	
11613	O	1.3	M	8	U	12410	–	L	
		2.3 II		2		12330*	–	L,Y	
11614	X	1.3	F	8	U	12420	–	L	
		2.3 II		2		12340*	–	L,Y	
11615	O	4.8	F	8	U	12380	–	Y	
11616	O	1.3	F	6	U	12420	–	L	
11617	X	2.3 II	F	6	U	12340*	–	L,Y	
11618	X	1.3	F	40	U	12420	–	L	
11619	X	1.0 II	M	16	U	–	–	–	PCB
		1.8 II		18		–	–	–	
11620	X	1.3	M	3	U	–	–	–	PCB
11621	X	1.3	M	22	U	–	–	–	PCB
11622	O	2.3 II	M	3	S	12430*	–	L,Y	
11623	O	1.3	M	8	U	12410	–	L	
11624	X	1.3	M	6	U	–	–	–	PCB
		2.3 II		10		–	–	–	
11625	X	1.3	M	5	U	–	–	–	PCB
		4.8		2		–	–	–	
		2.3 II		17		–	–	–	
11626	X	2.3 II	F	12	U	12340*	–	L,Y	
11627	X	1.3	M	20	U	12410	–	L	
11628	O	1.3	F	22	U	12420	–	L	
11629	O	1.3	M	8	U	–	–	–	PCB
11630	O	1.3	F	8	U	12420	–	L	
11631	O	4.8	M	6	U	12370	–	Y	
		2.3 II		20		12330*	–	L,Y	
11632	X	4.8	F	6	U	12380	–	Y	
		2.3 II		20		12340*	–	L,Y	
11633	X	1.3	F	8	U	12420	–	L	
11634	X	1.3	M	12	U	–	–	–	PCB
11635	X	1.3	M	13	U	–	–	–	PCB
11636	X	1.3	M	8	U	–	–	–	PCB
11637	O	1.0 III	F	28	U	12690*	–	L	

HOUSING PART NUMBER LIST

Part No. of Connector Body	Supply	Terminal	Male Female	Cav. No.	Sealing Ability	Part No. of Repair Wire		Sleeve Color	Memo
						160 mm Type	500 mm Type		
90980– 11638	O	1.0 III 1.0 IV	F	16 6	U	82998– 12690* 12740	82998– – –	 L L	
11639	X	–	–	–	–	–	–	–	
11640	X	6.3 II	F	4	S	24160	–	L	
11641	O	1.3	M	10	U	–	–	–	PCB
11642	O	1.3	F	10	U	12420	–	L	
11643	O	4.8 2.3 II	F	2 7	S	12480 12440*	– 12590	Y L,Y	
11644	X	1.3	M	14	U	–	–	–	PCB
11645	X	1.3 2.3 II	M	60 10	U	– –	– –	– –	PCB
11646	X	1.3 2.3 II	M	36 16	U	– –	– –	– –	PCB
11647	X	1.3 2.3 II	M	20 16	U	– –	– –	– –	PCB
11648	X	1.3	F	16	U	12420	–	L	
11649	O	2.3 II	F	12	U	12340*	–	L,Y	
11650	X	1.8 1.0	M	22 32	U	– –	– –	– –	PCB
11651	X	1.3 2.3 II	M	8 6	U	– –	– –	– –	PCB
11652	X	1.3 2.3 II	F	10 6	U	12420 12340*	– –	L L,Y	
11653	O	2.3 II	F	10	S	12440*	12590	L,Y	
11654	O	1.3	M	14	U	12410	–	L	
11655	O	8.0	M	2	U	12390	–	Y	
11656	O	2.3 II	F	12	U	12340*	–	L,Y	
11657	O	1.3	F	10	U	12420	–	L	
11658	O	2.3 II	F	10	S	12440*	12590	L,Y	
11659	O	HEAD-LAMP	F	2	S	24150	24190	L,Y	
11660	O	HEAD-LAMP	F	2	S	24150	24190	L,Y	
11661	O	2.3 II	F	12	U	12340*	–	L,Y	
11662	X	8.0	F	4	U	12400	–	Y	
11663	X	2.3 II	F	6	S	12440*	12590	L,Y	
11664	X	2.3 II	F	12	S	12440*	12590	L,Y	
11665	O	OBD II	F	16	U	–	–	–	
11666	X	–	–	–	–	–	–	–	

HOUSING PART NUMBER LIST

Part No. of Connector Body	Supply	Terminal	Male Female	Cav. No.	Sealing Ability	Part No. of Repair Wire		Sleeve Color	Memo
						160 mm Type	500 mm Type		
90980– 11667	X	4.8 8.0	F	1 2	U	82998– 12380 12400	82998– – –	 Y Y	
11669	X	2.3 II	M	27	U	12330*	–	L,Y	
11670	X	2.3 II	F	27	U	12340*	–	L,Y	
11671	O	1.3 2.3 II	F	8 9	U	12420 12340*	– –	L L,Y	
11672	X	1.3 2.3 II	F	8 9	U	12420 12340*	– –	L L,Y	
11676	X	8.0	F	4	U	12400	–	Y	
11677	X	2.3 II	F	15	S	12440*	12590	L,Y	
11680	X	1.3	M	16	U	12410	–	L	
11681	X	1.3	F	16	U	12420	–	L	
11682	X	1.3	M	16	U	12410	–	L	
11683	X	1.3	F	16	U	12420	–	L	
11684	O	8.0	F	2	U	12400	–	Y	
11685	O	8.0	F	3	U	12400	–	Y	
11686	O	4.8	F	8	U	12380	–	Y	
11687	X	6.3	F	2	U	12060	12580	Y	
11688	X	1.3	M	5	S	12630	–	L	
11689	X	1.3	M	5	S	12630	–	L	
11690	X	1.3	F	5	S	12650	–	L	Outer
11691	X	1.3	F	5	S	12650	–	L	Inner
11693	X	2.3 II	F	12	U	12340*	–	L,Y	
11694	X	2.3 II	M	13	U	12330*	–	L,Y	
11695	X	2.3 II	F	13	U	12340*	–	L,Y	
11696	X	1.5	M	6	U	–	–	–	PCB
11697	X	1.5	F	6	U	–	–	–	
11698	O	1.3	F	12	S	12650	–	L	
11700	X	1.0 II 1.8 II	M	32 10	U	– –	– –	– –	PCB
11701	O	4.8 2.3 II	F	4 4	U	12380 12340*	– –	Y L,Y	
11703	X	2.3 II	F	1	U	12340*	–	L,Y	
11709	X	2.3 II	M	9	U	12330*	–	L,Y	
11710	X	2.3 II	F	9	U	12340*	–	L,Y	
11714	X	2.3 II	F	13	U	12340*	–	L,Y	
11716	X	1.3 2.3 II	F	10 8	U	12420 12340*	– –	L L,Y	
11720	X	2.3 II	F	12	U	12340*	–	L,Y	

HOUSING PART NUMBER LIST

Part No. of Connector Body	Supply	Terminal	Male Female	Cav. No.	Sealing Ability	Part No. of Repair Wire		Sleeve Color	Memo
						160 mm Type	500 mm Type		
90980–11724	X	2.3 II	M	2	U	82998–12350*	82998– –	L,Y	
11731	X	HEAD-LAMP	F	3	U	24140	24200	L,Y	
11733	O	1.8	M	22	U	–	–	–	PCB
		1.0		16		–	–	–	
		1.0 II		16		–	–	–	
		1.8 II		22		–	–	–	
11735	X	2.3 II	M	2	U	12330*	–	L,Y	
11736	O	2.3 II	F	2	U	12340*	–	L,Y	
11737	X	2.3 II	M	1	U	12330*	–	L,Y	
11738	X	2.3 II	F	1	U	12340*	–	L,Y	
11739	X	2.3 II	M	7	U	12330*	–	L,Y	
11740	X	2.3 II	F	7	U	12340*	–	L,Y	
11742	O	4.8	F	4	U	12380	–	Y	
11743	X	1.3	M	14	U	–	–	–	PCB
11744	X	1.3	M	14	U	–	–	–	PCB
11745	X	1.3	M	18	U	–	–	–	PCB
11746	X	1.3	M	22	U	–	–	–	PCB
11747	X	2.3 II	M	12	U	–	–	–	PCB
11748	X	2.3 II	M	18	U	–	–	–	PCB
11749	X	2.3 II	M	20	U	–	–	–	PCB
11750	X	2.3 II	M	20	U	–	–	–	PCB
11751	X	2.3 II	M	18	U	–	–	–	PCB
11752	X	2.3 II	M	10	U	–	–	–	PCB
11753	X	2.3 II	M	14	U	–	–	–	PCB
11757	X	2.3 II	M	10	U	12330*	–	L,Y	
11763	X	2.3 II	M	3	U	12330*	–	L,Y	
11764	O	2.3 II	F	3	U	12340*	–	L,Y	
11765	X	2.3 II	M	4	U	12330*	–	L,Y	
11766	X	2.3 II	F	4	U	12340*	–	L,Y	
11767	X	2.3 II	M	1	U	12330*	–	L,Y	
11769	X	2.3 II	F	2	U	12340*	–	L,Y	
11771	X	4.8	F	2	U	12380	–	Y	
		2.3 II		2		12340*	–	L,Y	
11772	X	2.3 II	F	5	U	12340*	–	L,Y	
11773	X	2.3 II	F	2	S	12440*	12590	L,Y	
11774	X	9.5	M	1	U	–	–	–	
11775	X	9.5	F	1	U	–	–	–	
11777	X	1.3	F	3	U	12420	–	L	

HOUSING PART NUMBER LIST

Part No. of Connector Body	Supply	Terminal	Male Female	Cav. No.	Sealing Ability	Part No. of Repair Wire		Sleeve Color	Memo
						160 mm Type	500 mm Type		
90980– 11778	O	4.8	F	6	U	82998– 12380	82998– –	Y	
11779	O	2.3 II	M	4	U	12330*	–	L,Y	
11780	O	2.3 II	F	6	U	12340*	–	L,Y	
11781	X	2.3 II	F	10	U	12340*	–	L,Y	
11782	X	2.3 II	F	12	U	12340*	–	L,Y	
11784	O	4.8 2.3 II	F	2 7	S	12480 12440*	– 12590	Y L,Y	
11785	X	1.0 J 1.8 J	M	48 16	U	– –	– –	– –	PCB
11786	X	1.0 J 1.8 J	F	16 10	U	– –	– –	– –	
11787	X	1.0 J	F	16	U	–	–	–	
11788	X	1.0 J 1.8 J	F	16 6	U	– –	– –	– –	
11789	X	1.0 III	M	2	S	12710	–	L	
11790	X	1.0 III	F	2	S	12720*	–	L	
11791	X	2.3 II	F	14	U	12340*	–	L,Y	
11792	X	2.3 II	F	4	U	12340*	–	L,Y	
11794	X	VH	F	7	U	–	–	–	
11797	X	2.3 II	F	5	U	12340*	–	L,Y	
11799	X	4.8	F	4	U	12380	–	Y	
11800	X	2.3 II	F	10	U	12340*	–	L,Y	
11805	X	2.3 II	F	14	U	12340*	–	L,Y	
11809	X	4.8	M	4	U	12370	–	Y	
11812	X	2.3 II	M	4	U	12330*	–	L,Y	
11814	X	2.3 II	M	6	U	12330*	–	L,Y	
11817	X	2.3 II	F	10	U	12340*	–	L,Y	
11820	X	2.3 II	F	6	U	12340*	–	L,Y	
11823	X	2.3 II	M	10	U	12330*	–	L,Y	
11824	X	8.0	F	2	U	12400	–	Y	
11827	X	2.3 II	F	13	U	12340*	–	L,Y	
11839	X	2.3 II	F	2	U	12340*	–	L,Y	
11840	X	2.3 II	F	2	U	12340*	–	L,Y	
11841	X	2.3 II	F	4	U	12340*	–	L,Y	
11842	X	2.3 II	F	4	U	12340*	–	L,Y	
11843	X	2.3 II	M	5	U	12330*	–	L,Y	
11847	X	2.3 II	F	12	U	12340*	–	L,Y	
11848	X	2.3 II	F	13	U	12340*	–	L,Y	

HOUSING PART NUMBER LIST

Part No. of Connector Body	Supply	Terminal	Male Female	Cav. No.	Sealing Ability	Part No. of Repair Wire		Sleeve Color	Memo
						160 mm Type	500 mm Type		
90980– 11851	X	4.8 2.3 II	F	4 20	S	82998– 12480 –	82998– – 12790*	Y L,Y	
11853	X	6.3	F	1	U	12060	12580	Y	
11854	X	1.0 III	M	2	S	12710	–	L	
11856	O	1.0 III	F	2	S	12720*	–	L	
11857	X	1.0 III	F	4	S	12720*	–	L	
11858	O	2.3 II	F	6	S	12440*	12590	L,Y	
11859	X	2.3 II	F	2	S	12440*	12590	L,Y	
11860	X	2.3 II	F	3	S	12440*	12590	L,Y	
11861	X	4.8 1.5	F	25 25	S	12480 –	– –	Y –	
11862	O	PAI 1	F	2	U	–	–	–	
11863	X	1.0 III	M	2	S	12710	–	L	
11864	X	1.0 III	F	2	S	12720*	–	L	
11865	X	1.0 III	M	2	S	12710	–	L	
11866	X	1.0 III	M	44	U	–	–	–	PCB
11867	X	1.0 III	F	12	U	12690*	–	L	
11868	X	1.0 III	F	20	U	12690*	–	L	
11869	X	1.0 III	F	12	U	12690*	–	L	
11870	X	1.0 III	M	52	U	–	–	–	PCB
11871	X	1.0 III	F	12	U	12690*	–	L	
11872	X	1.0 III	F	28	U	12690*	–	L	
11873	X	1.0 III	F	12	U	12690*	–	L	
11874	X	2.3 II	M	3	U	–	–	–	PCB
11875	O	2.3 II	F	2	S	–	12790*	L,Y	
11876	X	1.0 III 2.3 II	M	19 6	U	– –	– –	– –	PCB
11877	O	1.0 III 2.3 II	F	19 6	U	12690* 12340*	– –	L L,Y	
11878	O	4.8	M	4	U	12370	–	Y	
11879	X	4.8	F	6	U	12380	–	Y	
11880	X	8.0	F	3	U	12400	–	Y	
11881	X	9.5	F	1	U	–	–	–	
11882	X	4.8 2.3 II	F	4 20	S	12480 –	– 12790*	Y L,Y	
11883	X	1.0 III	M	2	U	12670*	–	L	
11884	X	1.0 III	F	2	U	12690*	–	L	
11885	O	2.3 II	F	4	S	–	12790*	L,Y	
11886	O	1.0 III	F	2	U	12690*	–	L	

HOUSING PART NUMBER LIST

Part No. of Connector Body	Supply	Terminal	Male Female	Cav. No.	Sealing Ability	Part No. of Repair Wire		Sleeve Color	Memo
						160 mm Type	500 mm Type		
90980– 11889	X	1.0 III	M	2	U	82998– 12670*	82998– –	L	
11890	X	1.0 III	F	2	U	12690*	–	L	
11891	X	1.0 III	M	4	U	12670*	–	L	
11892	X	1.0 III	F	4	U	12690*	–	L	
11893	X	4.8 2.3 II	F	4 20	S	12480 –	– 12790*	Y L,Y	
11898	X	1.0 III	F	2	S	12720*	–	L	
11899	X	1.8 1.0	M	8 18	U	– –	– –	– –	PCB
11900	X	2.3 II	F	2	S	–	12790*	L,Y	
11901	X	2.3 II	M	2	S	12430*	–	L,Y	
11902	O	1.8 1.0	M	6 32	U	– –	– –	– –	PCB
11903	X	1.0 III 1.0 III	M	5 44	U	– –	– –	– –	PCB
11904	X	1.0 III	M	5	S	12710	–	L	
11905	X	1.3 2.3 II	M	16 4	U	– –	– –	– –	PCB
11906	X	SL	F	83	U	12130	–	L,Y	
11907	X	SL	F	3	S	–	–	–	
11908	X	SL	F	5	U	12130	–	L,Y	
11909	O	1.0 III	F	5	U	12690*	–	L	
11910	X	1.0 III	M	14	U	12670*	–	L	
11911	O	1.0 III	F	14	U	12690*	–	L	
11912	X	1.0 III	M	18	U	12670*	–	L	
11913	O	1.0 III	F	18	U	12690*	–	L	
11914	O	1.0 III	F	18	U	12640	–	L	IDC
11915	O	1.0 III	F	22	U	12690*	–	L	
11916	X	1.0 III	M	40	U	–	–	–	PCB
11917	X	1.0 III	M	2	U	12670*	–	L	
11918	O	1.0 III	F	2	U	12690*	–	L	
11919	O	1.0 III	F	2	U	12640	–	L	IDC
11920	O	1.0 III	M	5	U	12670*	–	L	
11921	O	1.0 III	F	5	U	12640	–	L	IDC
11922	X	1.0 III	M	10	U	12670*	–	L	
11923	O	1.0 III	F	10	U	12690*	–	L	
11924	O	1.0 III	F	10	U	12640	–	L	IDC
11925	O	1.0 III	F	14	U	12640	–	L	IDC
11926	O	1.0 III	M	22	U	12670*	–	L	

HOUSING PART NUMBER LIST

Part No. of Connector Body	Supply	Terminal	Male Female	Cav. No.	Sealing Ability	Part No. of Repair Wire		Sleeve Color	Memo
						160 mm Type	500 mm Type		
90980–11927	O	1.0 III	F	22	U	82998–12640	82998– –	L	IDC
11928	X	1.0 III	M	54	U	–	–	–	PCB
11929	X	2.3 II	M	4	S	12430*	–	L,Y	
11930	X	2.3 II	F	4	S	12440*	12590	L,Y	
11933	X	1.0 III	M	2	U	12670*	–	L	
11934	X	1.0 III 1.0 IV	M	81 24	U	– –	– –	– –	PCB
11935	X	1.0 III 1.0 IV	F	20 11	U	12690* 12740	– –	L L	
11936	X	8.0	M	3	U	12390	–	Y	
11937	X	INVERT-ER	M	3	U	–	–	–	
11938	X	INVERT-ER	F	3	U	–	–	–	
11939	O	–	–	–	–	–	–	–	
11940	X	PIN	M	2	S	–	–	–	
11941	X	LA	F	1	S	–	–	–	
11942	O	LA	F	1	S	–	–	–	
11943	X	SOCK-ET	F	1	S	–	–	–	
11944	O	SOCK-ET	F	1	S	–	–	–	
11945	O	PIN	M	2	S	–	–	–	
11946	X	1.0 III	M	5	U	–	–	–	PCB
11947	X	1.0 III 2.3 II	F	8 4	U	12690* 12340*	– –	L L,Y	
11948	O	1.0 III	F	10	U	12640	–	L	IDC
11949	X	1.0 III	M	18	U	–	–	–	PCB
11950	X	1.0 III	F	4	U	12690*	–	L	
11951	X	1.0 III	M	13	U	–	–	–	PCB
11952	X	1.0 III	F	13	U	12690*	–	L	
11953	X	1.0 III 2.3 II	M	64 14	U	– –	– –	– –	PCB
11954	X	1.0 III 2.3 II	F	8 9	U	12690* 12340*	– –	L L,Y	
11955	X	1.0 III	F	19	U	12690*	–	L	
11956	X	1.0 III	F	21	U	12690*	–	L	
11957	X	1.0 III 2.3 II	F	16 5	U	12690* 12340*	– –	L L,Y	
11960	X	2.3 II	F	5	S	12440*	12590	L,Y	

HOUSING PART NUMBER LIST

Part No. of Connector Body	Supply	Terminal	Male Female	Cav. No.	Sealing Ability	Part No. of Repair Wire		Sleeve Color	Memo
						160 mm Type	500 mm Type		
90980– 11961	X	1.0 III 1.0 III	M	5 28	U	82998– –	82998– –	– –	PCB
11962	X	9.5	M	1	S	–	–	–	
11963	X	9.5	F	1	S	–	–	–	
11964	O	2.3 II	F	4	S	12440*	12590	L,Y	
11965	X	8.0	M	4	U	–	–	–	PCB
11966	X	1.0 II	M	22	U	–	–	–	PCB
11967	O	1.0 III	M	2	U	12670*	–	L	
11968	X	1.0 III	M	5	U	–	–	–	PCB
11969	X	1.0 III	M	14	U	–	–	–	PCB
11970	X	1.0 III 2.3 II	M	16 4	U	– –	– –	– –	PCB
11971	X	1.0 III 2.3 II	F	16 4	U	12690* 12340*	– –	L L,Y	
11972	X	1.0 III 2.3 II	M	49 14	U	– –	– –	– –	PCB
11973	O	1.0 III 2.3 II	F	10 8	U	12690* 12340*	– –	L L,Y	
11974	X	1.0 III	F	20	U	12690*	–	L	
11976	O	–	–	–	–	–	–	–	
11978	X	OBD II	F	16	U	–	–	–	
11985	X	1.0 III	M	4	U	–	–	–	PCB
11986	O	1.0 III	F	6	U	12690*	–	L	
11987	X	1.0 III	F	3	U	12690*	–	L	
11988	O	1.0 III	F	4	U	12640	–	L	IDC
11989	X	1.0 III	F	8	U	12690*	–	L	
11990	X	1.0 III 2.3 II	M	37 18	U	– –	– –	– –	PCB
11992	X	1.0 III	M	2	U	12670*	–	L	
11993	X	1.0 III	M	10	U	–	–	–	PCB
11994	X	2.3 II	M	3	U	–	–	–	PCB
11995	O	–	–	–	–	–	–	–	
11996	X	9.5	F	2	U	–	–	–	
12002	X	1.0 III 2.3 II	M	6 5	U	12670* 12330*	– –	L L,Y	
12003	X	1.0 III 2.3 II	F	6 5	U	12690* 12340*	– –	L L,Y	
12004	X	1.0	M	6	U	–	–	–	IDC
12005	X	2.3 II	F	4	S	–	12790*	L,Y	

HOUSING PART NUMBER LIST

Part No. of Connector Body	Supply	Terminal	Male Female	Cav. No.	Sealing Ability	Part No. of Repair Wire		Sleeve Color	Memo
						160 mm Type	500 mm Type		
90980–12006	O	–	–	–	–	82998– –	82998– –	–	
12007	X	1.0 III 2.3 II	F	4 9	U	12690* 12340*	– –	L L,Y	
12008	O	1.0 III 2.3 II	F	2 8	U	12690* 12340*	– –	L L,Y	
12009	X	1.0 III	M	10	U	–	–	–	PCB
12010	X	1.0 III 2.3 II	M	10 8	U	– –	– –	– –	PCB
12011	X	1.0 III	M	18	U	–	–	–	PCB
12012	X	1.0 III	F	6	U	12690*	–	L	
12013	X	1.0 III	M	6	U	–	–	–	PCB
12014	X	2.3 II	F	2	U	12340*	–	L,Y	
12015	X	1.0 III	M	14	U	–	–	–	PCB
12016	X	1.0 III	M	4	U	12670*	–	L	
12017	X	1.0 III	F	4	U	12690*	–	L	
12018	X	2.3 II	F	4	U	12340*	–	L,Y	
12019	X	1.0 III	F	4	U	12640	–	L	IDC
12020	O	4.8 1.0 III	F	4 30	S	12480 12720*	– –	Y L	
12021	O	4.8 1.0 III	F	4 23	S	12480 12720*	– –	Y L	
12022	X	4.8 1.0 III	F	4 16	S	12480 12720*	– –	Y L	
12023	X	1.0 III	M	10	U	12660	–	L	IDC
12024	X	1.0 III	M	22	U	12670*	–	L	
12025	X	1.0 III 2.3 II	M	16 4	U	12670* 12330*	– –	L L,Y	
12026	X	2.3 II	F	9	U	24220	–	L	IDC
12027	X	2.3 II	F	13	U	24220	–	L	IDC
12028	O	2.3 II	F	2	S	12440*	12590	L,Y	
12029	X	1.0	M	2	U	–	–	–	
12030	X	1.0 III	M	22	U	–	–	–	PCB
12031	X	1.0 J 1.8 J	M	60 16	U	– –	– –	– –	PCB
12032	X	1.0 J	F	12	U	–	–	–	
12033	X	4.8 1.0 III	M	2 18	U	– –	– –	– –	PCB
12034	X	4.8 1.0 III	F	2 18	U	12380 12690*	– –	Y L	

HOUSING PART NUMBER LIST

Part No. of Connector Body	Supply	Terminal	Male Female	Cav. No.	Sealing Ability	Part No. of Repair Wire		Sleeve Color	Memo
						160 mm Type	500 mm Type		
90980– 12035	X	1.0 III 2.3 II	M	41 6	U	82998– –	82998– –	– –	PCB
12036	X	1.0 III	M	5	U	–	–	–	PCB
12037	X	1.0 III 2.3 II	M	16 4	U	– –	– –	– –	PCB
12038	O	1.0 III 2.3 II	F	16 4	U	12690* 12340*	– –	L L,Y	
12039	X	VH	F	2	U	–	–	–	
12041	X	HFC	M	1	U	–	–	–	
12050	X	1.0 III	M	5	U	–	–	–	PCB
12055	X	1.0 III 1.0 IV	M	100 22	U	– –	– –	– –	PCB
12056	X	0.64	F	6	U	–	–	–	
12057	X	2.3 II	F	4	S	12440*	12590	L,Y	
12058	X	4.8 8.0	F	1 2	S	12480 12500	– –	Y Y	
12059	X	1.0 III	M	7	U	12670*	–	L	
12060	X	1.0 III	F	7	U	12690*	–	L	
12061	X	1.0 III	M	8	U	–	–	–	PCB
12062	X	1.0 III	M	2	U	12670*	–	L	
12063	X	1.0 III	F	2	U	12690*	–	L	
12064	X	1.0 III	M	6	U	–	–	–	PCB
12067	X	1.0 III	F	6	U	12690*	–	L	
12068	X	8.0	F	2	S	12500	–	Y	
12070	X	2.3 II	F	24	U	12340*	–	L,Y	
12071	X	2.3 II	F	32	U	12340*	–	L,Y	
12079	X	B TO J	F	24	U	–	–	–	
12080	X	1.0 III	F	8	S	12720*	–	L	
12081	X	1.0 III	M	29	U	12670*	–	L	
12082	X	1.0 III	F	14	U	12690*	–	L	
12087	X	1.0 III	M	20	U	–	–	–	PCB
12088	O	2.3 II	F	2	U	12340*	–	L,Y	
12089	X	2.3 II	F	2	U	12340*	–	L,Y	
12090	X	2.3 II	F	12	U	12340*	–	L,Y	
12091	X	1.0 III	F	8	U	12690*	–	L	
12092	O	0.64 1.0 IV	F	5 2	U	– 12740	– –	– L	
12093	X	1.0 III	M	16	U	–	–	–	PCB
12094	X	1.0 III	F	16	U	12690*	–	L	

HOUSING PART NUMBER LIST

Part No. of Connector Body	Supply	Terminal	Male Female	Cav. No.	Sealing Ability	Part No. of Repair Wire		Sleeve Color	Memo
						160 mm Type	500 mm Type		
90980–12095	X	M6 NUT	F	3	S	82998– –	82998– –	–	
12096	X	1.0 III 2.3 II	F	12 20	U	12690* 12340*	– –	L L,Y	
12101	X	2.3 II	F	16	U	12340*	–	L,Y	
12102	X	2.3 II	F	28	U	12340*	–	L,Y	
12104	X	2.3 II	F	16	U	12340*	–	L,Y	
12105	X	2.3 II	M	16	U	12330*	–	L,Y	
12106	X	2.3 II	F	20	U	12340*	–	L,Y	
12108	X	2.3 II	M	18	U	–	–	–	PCB
12109	X	PAI 1	F	2	U	–	–	–	
12110	X	VALVE	F	2	U	–	–	–	
12111	X	VALVE	F	2	U	–	–	–	
12112	X	1.0 III	M	8	U	–	–	–	PCB
12113	X	1.0 III	F	8	U	12690*	–	L	
12114	X	1.0 III 2.3 II	F	6 28	U	12690* 12340*	– –	L L,Y	
12116	O	4.8 1.0 III	F	4 20	S	12480 12720*	– –	Y L	
12117	X	2.3 II	F	2	S	–	12790*	L,Y	
12118	X	8.0	M	2	U	–	–	–	PCB
12119	X	8.0	M	2	U	–	–	–	PCB
12120	X	8.0	F	2	U	12400	–	Y	
12122	X	1.0 III 2.3 II	F	6 12	U	12690* 12340*	– –	L L,Y	
12123	X	1.0 III	M	4	U	12670*	–	L	
12125	X	LA	F	1	S	–	–	–	
12129	X	LA	F	1	S	–	–	–	
12131	X	BUS–BAR	M	3	S	–	–	–	
12134	X	1.0 III	M	10	U	–	–	–	PCB
12135	X	1.0 III	F	10	U	12690*	–	L	
12136	X	LA	F	1	S	–	–	–	
12137	X	1.0 III 2.3 II	M	14 6	U	– –	– –	– –	PCB
12138	O	PAI 1	F	2	U	–	–	–	
12140	X	1.0 II 1.8 II	M	48 16	U	– –	– –	– –	PCB
12141	X	0.64 1.0 IV	M	133 34	U	– –	– –	– –	PCB

HOUSING PART NUMBER LIST

Part No. of Connector Body	Supply	Terminal	Male Female	Cav. No.	Sealing Ability	Part No. of Repair Wire		Sleeve Color	Memo
						160 mm Type	500 mm Type		
90980–						82998–	82998–		
12142	X	0.64	F	24	U	12750*	–	L	
		1.0 IV		7		12740	–	L	
12143	X	0.64	F	25	U	12750*	–	L	
		1.0 IV		7		12740	–	L	
12144	X	0.64	F	27	U	12750*	–	L	
		1.0 IV		7		12740	–	L	
12145	X	0.64	F	28	U	12750*	–	L	
		1.0 IV		7		12740	–	L	
12146	X	0.64	F	29	U	12750*	–	L	
		1.0 IV		6		12740	–	L	
12147	X	0.64	M	68	U	–	–	–	PCB
		2.3 II		12		–	–	–	
12148	X	0.64	M	40	U	–	–	–	PCB
		2.3 II		10		–	–	–	
12149	X	0.64	F	20	U	12750*	–	L	
		2.3 II		4		12340*	–	L,Y	
12150	X	0.64	F	20	U	12750*	–	L	
		2.3 II		6		12340*	–	L,Y	
12151	X	0.64	F	28	U	12750*	–	L	
		2.3 II		2		12340*	–	L,Y	
12152	X	0.64	M	32	U	–	–	–	PCB
12153	X	0.64	F	32	U	12750*	–	L	
12155	X	0.64	F	16	U	12750*	–	L	
12156	X	0.64	F	16	U	12770	–	L	IDC
12157	X	0.64	M	16	U	–	–	–	PCB
12159	X	1.0 III	M	4	U	12670*	–	L	
12160	X	1.0 III	F	4	U	12690*	–	L	
12161	X	1.0 III	M	8	U	12670*	–	L	
		2.3 II		9		12330*	–	L,Y	
12162	X	1.0 III	F	10	U	12690*	–	L	
12163	X	2.3 II	M	8	S	12430*	–	L,Y	
12164	X	2.3 II	F	8	S	12440*	12590	L,Y	
12165	O	–	–	–	–	–	–	–	
12166	X	1.0 III	F	14	U	12690*	–	L	
		2.3 II		6		12340*	–	L,Y	
12167	X	1.0 III	M	8	U	–	–	–	PCB
12168	X	1.0 III	F	3	S	12720*	–	L	
12169	X	0.64	F	40	U	12750*	–	L	
12170	X	0.64	F	40	U	12770	–	L	IDC

HOUSING PART NUMBER LIST

Part No. of Connector Body	Supply	Terminal	Male Female	Cav. No.	Sealing Ability	Part No. of Repair Wire		Sleeve Color	Memo
						160 mm Type	500 mm Type		
90980–12171	X	0.64	M	40	U	82998––	82998––	–	PCB
12174	X	1.0 II	F	18	U	24020*	–	L	IDC
12176	O	2.3 II	F	4	S	–	12790*	L,Y	
12177	X	2.3 II	M	4	S	–	–	L,Y	
12179	X	1.0 III 2.3 II	F	42 4	U	12690* 12340*	– –	L L,Y	
12182	X	0.64	M	12	U	–	–	–	PCB
12183	X	0.64	F	12	U	12750*	–	L	
12184	X	1.0 III 2.3 II	F	30 12	U	12690* 12340*	– –	L L,Y	
12188	X	2.3 II	F	2	S	12440*	12590	L,Y	
12189	X	1.0 III	M	5	U	12670*	–	L	
12190	X	1.0 III	F	5	U	12690*	–	L	
12191	X	PAI 1	F	2	U	–	–	–	
12192	X	0.64	M	16	U	–	–	–	
12193	X	0.64	M	24	U	–	–	–	
12194	X	1.0 III	M	2	S	12710	–	L	
12195	X	1.0 III	F	2	S	12720*	–	L	
12196	X	D–3	M	3	U	–	–	–	
12197	X	D–3	F	3	U	–	–	–	
12198	X	D–3	M	6	U	–	–	–	
12199	X	D–3	F	6	U	–	–	–	
12200	X	0.64	F	24	U	12750*	–	L	
12202	X	0.64 2.3 II	M	20 6	U	– –	– –	– –	PCB
12203	X	0.64 2.3 II	F	20 6	U	12750* 12340*	– –	L L,Y	
12204	X	1.0 III	M	6	U	12670*	–	L	
12205	X	2.3 II	M	12	U	–	–	–	PCB
12206	X	2.3 II	M	16	U	–	–	–	PCB
12207	X	1.0 III 2.3 II	M	26 8	U	– –	– –	– –	PCB
12208	X	1.0 III	M	6	U	–	–	–	PCB
12209	O	1.0 III	F	6	U	12690*	–	L	
12210	X	1.0 III	M	4	U	–	–	–	PCB
12211	O	1.0 III	F	4	U	12690*	–	L	
12212	X	1.0 III	M	4	U	12670*	–	L	
12213	X	0.64	M	40	U	–	–	–	PCB
12214	X	0.64	M	24	U	–	–	–	PCB

HOUSING PART NUMBER LIST

Part No. of Connector Body	Supply	Terminal	Male Female	Cav. No.	Sealing Ability	Part No. of Repair Wire		Sleeve Color	Memo
						160 mm Type	500 mm Type		
90980–12215	X	0.64	M	24	U	82998––	82998––	–	PCB
12216	X	0.64	M	8	U	–	–	–	PCB
12217	X	0.64	F	8	U	12750*	–	L	
12218	X	PAI 1	M	2	U	–	–	–	
12219	X	PAI 1	F	2	U	–	–	–	
12220	X	0.64	M	8	U	–	–	–	PCB
12221	X	0.64	F	8	U	12750*	–	L	
12222	X	0.64	F	12	U	12750*	–	L	
12223	X	PAI 1	M	2	U	–	–	–	
12224	X	PAI 1	F	2	U	–	–	–	
12225	X	0.64	F	4	U	12750*	–	L	Splash Proof
12226	X	1.0 III 2.3 II	F	6 4	U	12690* 12340*	– –	L L,Y	
12227	X	9.5	M	3	S	–	–	–	
12228	X	9.5	F	3	S	–	–	–	
12230	X	LA	F	1	S	–	–	–	
12231	X	LA	F	1	S	–	–	–	
12232	X	0.64 1.0 IV	M	108 27	U	– –	– –	– –	PCB
12233	X	0.64 2.3 II	M	20 6	U	– –	– –	– –	PCB
12234	X	4.8	M	3	S	12470	–	Y	
12237	X	4.8	F	3	S	12480	–	Y	
12241	X	0.64	F	2	U	12750*	–	L	Splash Proof
12242	X	PAI 1	F	2	U	–	–	–	
12243	X	PAI 1	F	2	U	–	–	–	
12249	X	2.3 II	M	10	U	12330*	–	L,Y	
12250	X	0.64	M	11	U	–	–	–	
12251	X	0.64	F	11	U	12750*	–	L	
12252	X	0.64	M	16	U	–	–	–	
12253	O	PAI 1	F	2	U	–	–	–	
12258	X	0.64	M	20	U	–	–	–	PCB
12259	X	0.64	F	20	U	12750*	–	L	
12260	X	0.64	M	24	U	–	–	–	PCB
12269	X	0.64	M	12	U	–	–	–	PCB
12270	X	0.64	M	24	U	–	–	–	PCB
12271	X	1.0 III 2.3 II	F	20 6	U	12690* 12340*	– –	L L,Y	
12272	X	1.0 III	F	10	U	12690*	–	L	

HOUSING PART NUMBER LIST

Part No. of Connector Body	Supply	Terminal	Male Female	Cav. No.	Sealing Ability	Part No. of Repair Wire		Sleeve Color	Memo
						160 mm Type	500 mm Type		
90980–						82998–	82998–		
12273	X	1.0 III	F	6	U	12690*	–	L	
		2.3 II		6		12340*	–	L,Y	
12274	X	1.0 III	F	18	U	12690*	–	L	
		2.3 II		18		12340*	–	L,Y	
12275	X	1.0 III	F	8	U	12690*	–	L	
		2.3 II		24		12340*	–	L,Y	
12276	X	1.0 III	F	24	U	12690*	–	L	
		2.3 II		14		12340*	–	L,Y	
12277	X	1.0 III	F	10	U	12690*	–	L	
		2.3 II		20		12340*	–	L,Y	
12278	X	4.8	F	1	U	12380	–	Y	
		1.0 III		6		12690*	–	L	
		2.3 II		18		12340*	–	L,Y	
12291	X	1.0 III	M	39	U	–	–	–	PCB
12296	X	0.64	F	3	U	12750*	–	L	

Repair Wire (Waterproof Type)

Type	**1.0II**	
	Male	Female
		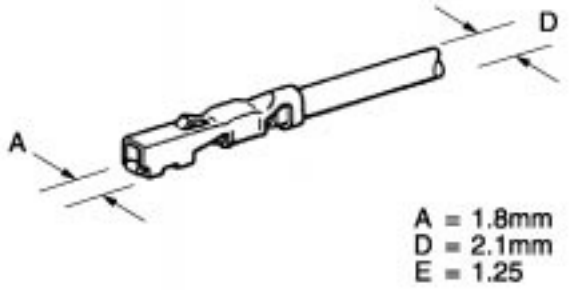
P/N		82998–24060
Type	**1.0III**	
	Male	Female
	Sleeve : Medium (Blue) 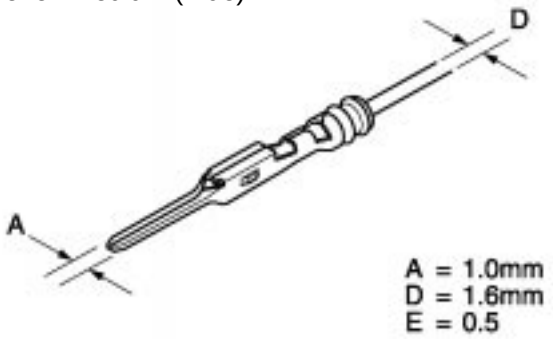	**Sleeve** : Medium (Blue) 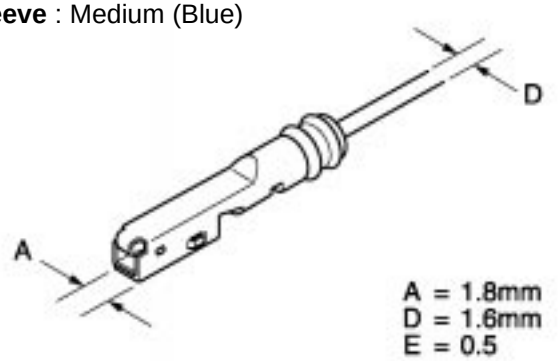
P/N	82998–12710	82998–12720 82998–12730*
Type	**1.3**	
	Male	Female
	Sleeve : Medium (Blue) 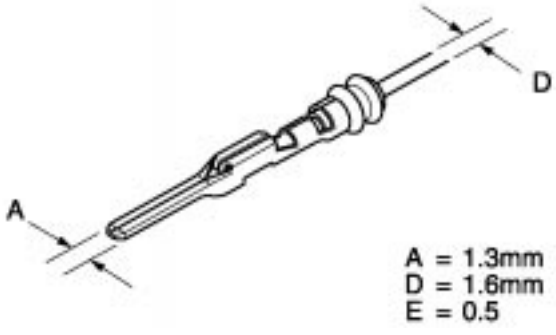	**Sleeve** : Medium (Blue) 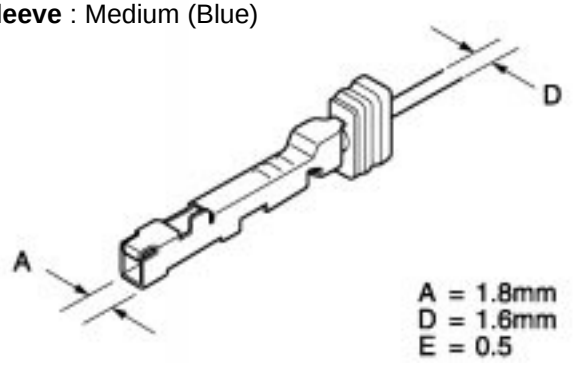
P/N	82998–12630	82998–12650

F

Repair Wire (Waterproof Type)

Type	1.8	
	Male	Female
		Sleeve : Medium (Blue) 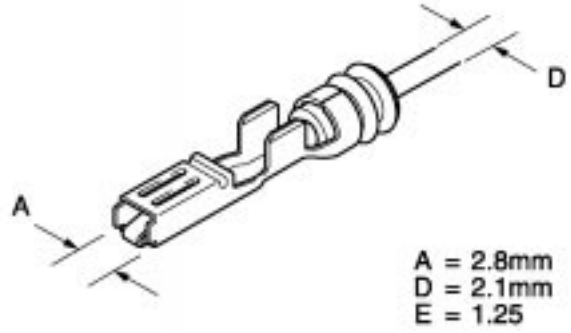
P/N		82998–12620
Type	**2.3**	
	Male	Female
	Sleeve : Medium (Blue) 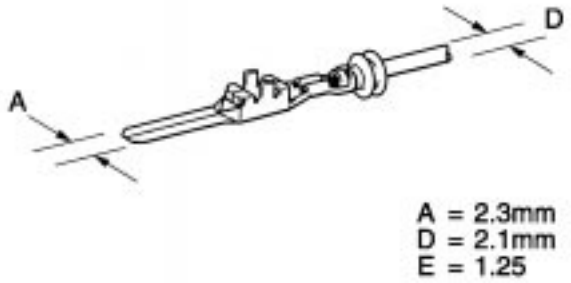	**Sleeve** : Medium (Blue) 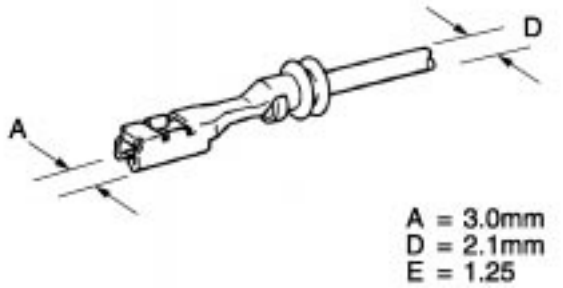
P/N	82998–12260 82998–24070*	82998–12270(160mm) 82998–12600(500mm) 82998–24080*
Type	**2.3II (6mm Pitch Type)**	
	Male	Female
	Sleeve : Medium (Blue) or Large (Yellow) 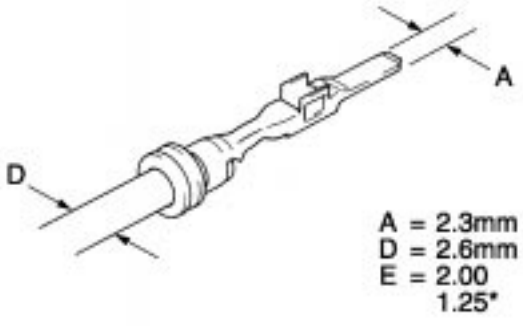	**Sleeve** : Medium (Blue) or Large (Yellow) 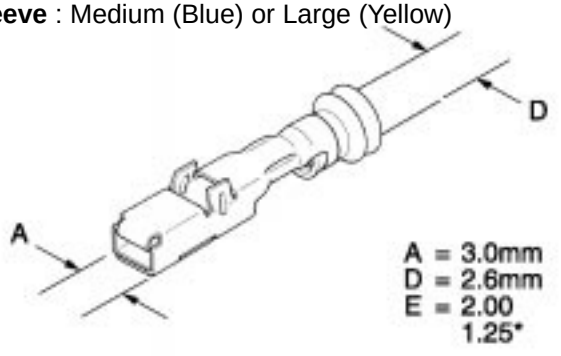
P/N	82998–12430 82998–12450*	82998–12440(160mm) 82998–12590(500mm) 82998–12460*

Repair Wire (Waterproof Type)

Type	2.3II (5mm Pitch Type)	
	Male	Female
		Sleeve : Medium (Blue) or Large (Yellow) 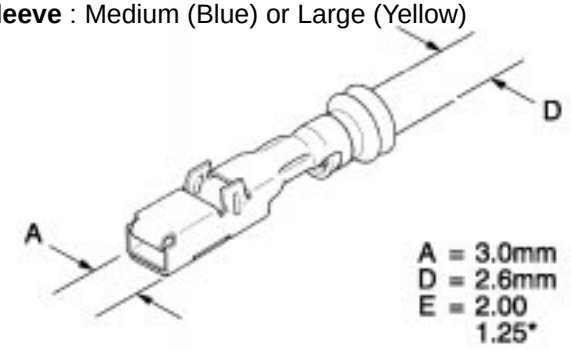
P/N		82998–12790 82998–12780*
Type	4.8	
	Male	Female
	Sleeve : Large (Yellow) 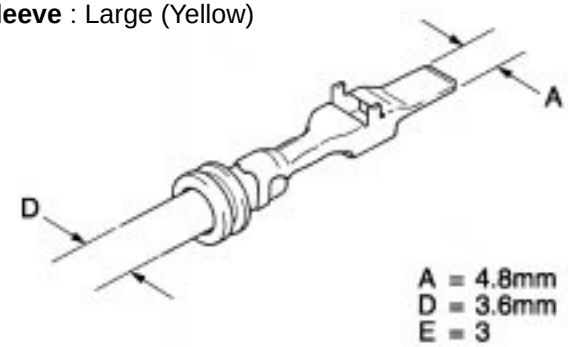	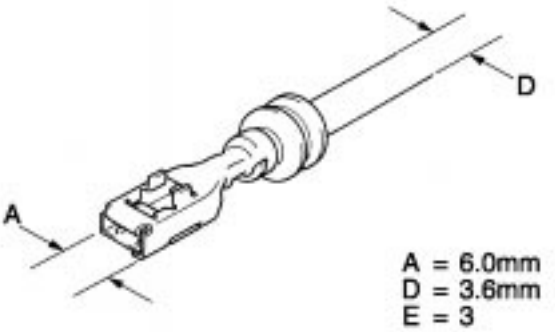
P/N	82998–12470	82998–12480
Type	6.3	
	Male	Female
		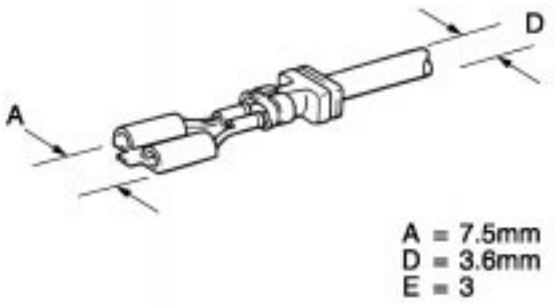
P/N		82998–12540

Repair Wire (Waterproof Type)

Type	6.3II	
	Male	Female
		Sleeve : Medium (Blue) 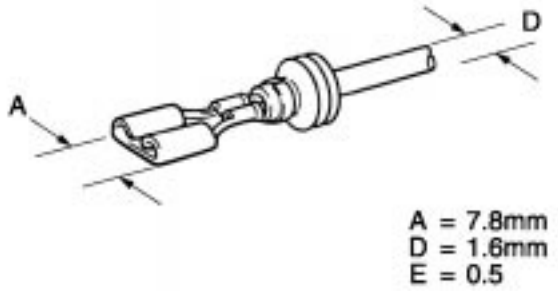
P/N		82998–24160
Type	8.0	
	Male	Female
	Sleeve : Large (Yellow) 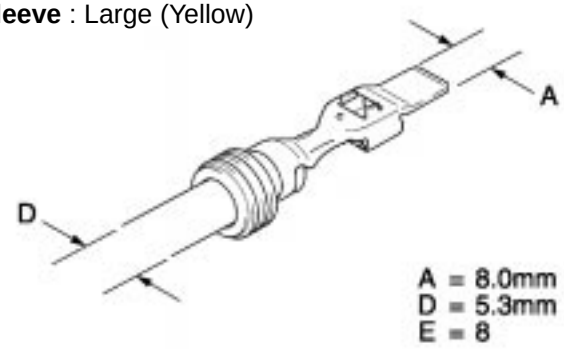	**Sleeve** : Large (Yellow) 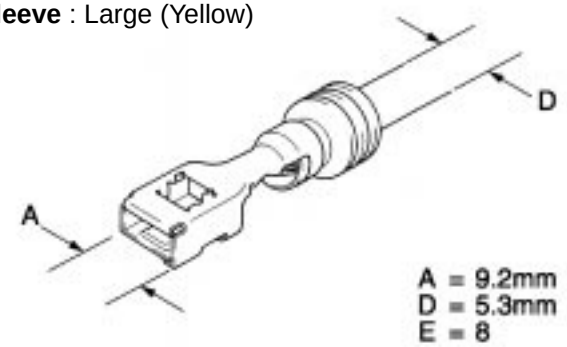
P/N	82998–12490	82998–12500
Type	HEAD LAMP	
	Male	Female
		Sleeve : Medium (Blue) or Large (Yellow) 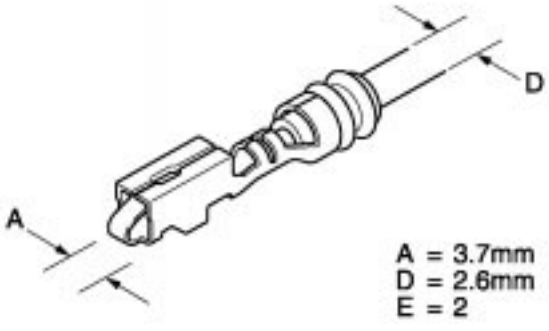
P/N		82998–24150(160mm) 82998–24190(500mm)

F

Repair Wire (Waterproof Type)

Type	HB3, HB4	
	Male	Female
		Sleeve : Medium (Blue) or Large (Yellow) 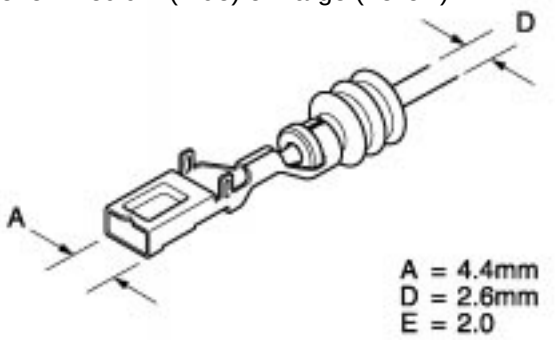
P/N		82998–12550(160mm) 82998–12610(500mm)
Type	**TLC**	
	Male	Female
	Sleeve : Small (Red) 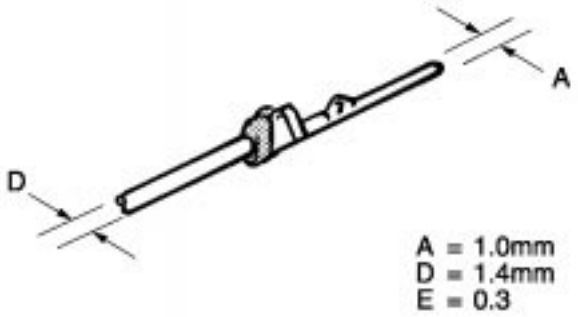	**Sleeve** : Small (Red) 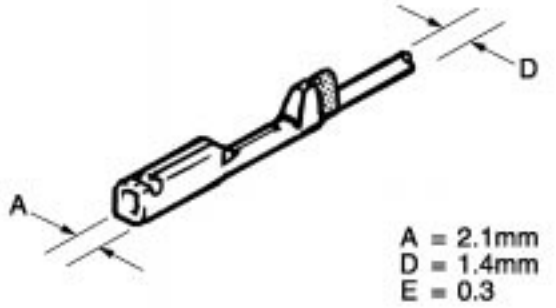
P/N	82998–12280	82998–12290

F

Repair Wire (Non–waterproof Type)

Type	0.64	
	Male	Female
		Sleeve : Medium (Blue) 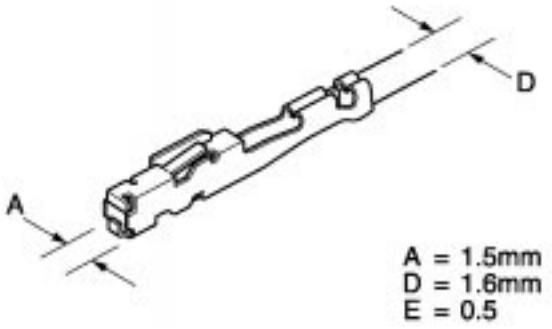
P/N		82998–12750 82998–12760*
Type	**0.64 IDC**	
	Male	Female
		Sleeve : Medium (Blue) 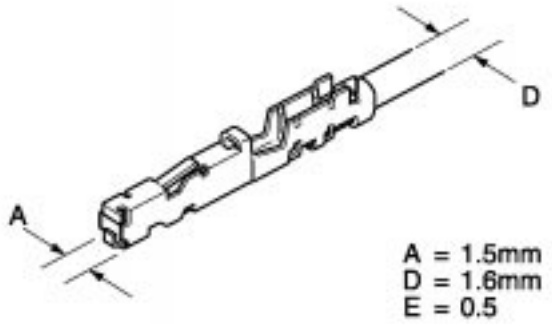
P/N		82998–12770
Type	**1.0**	
	Male	Female
		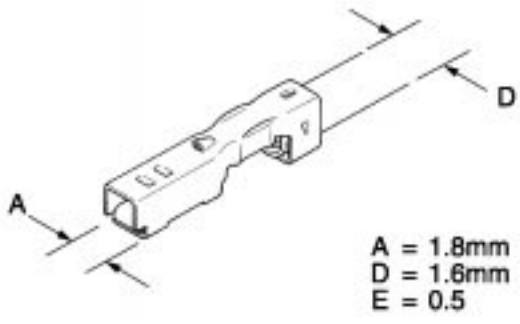
P/N		82998–12310 82998–12320*

F

Repair Wire (Non–waterproof Type)

Type	1.0II	
	Male	Female
	Sleeve : Medium (Blue) 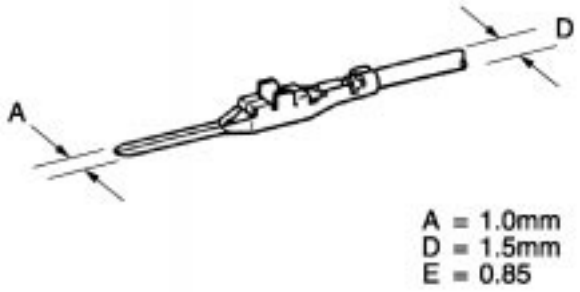	**Sleeve** : Medium (Blue) **Size : S** 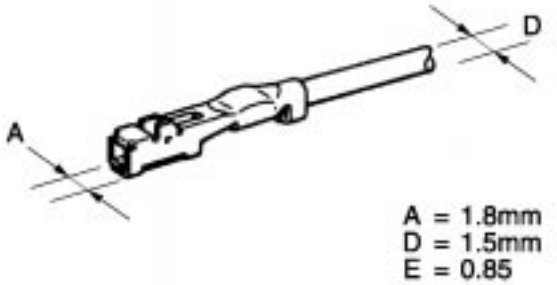
P/N	82998–24010	82998–24020 82998–24110*
Type	1.0II	
	Male	Female
		Sleeve : Medium (Blue) **Size : M** 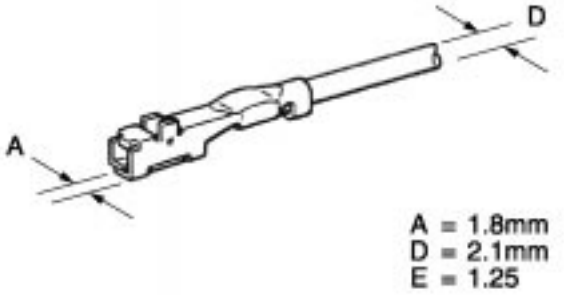
P/N		82998–24120*
Type	1.0III	
	Male	Female
	Sleeve : Medium (Blue) 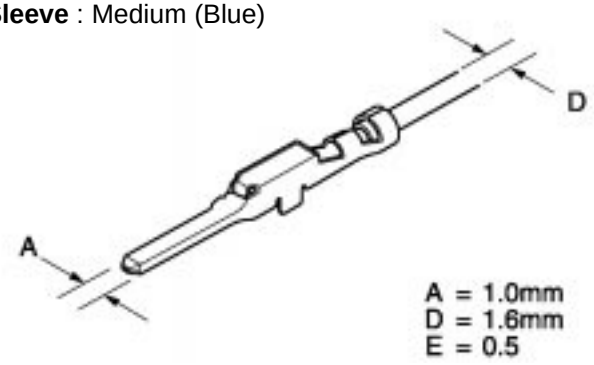	**Sleeve** : Medium (Blue) 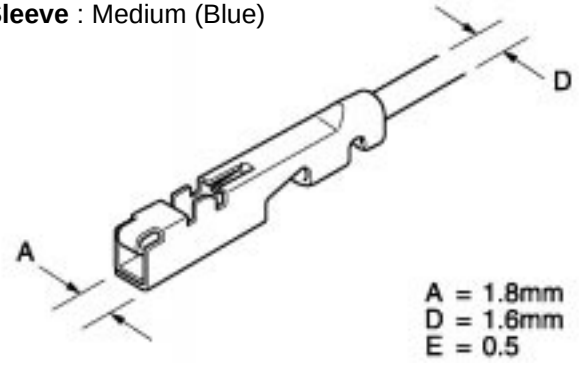
P/N	82998–12670 82998–12680*	82998–12690 82998–12700*

F

Repair Wire (Non–waterproof Type)

Type	1.0III IDC	
	Male	Female
	Sleeve : Medium (Blue) 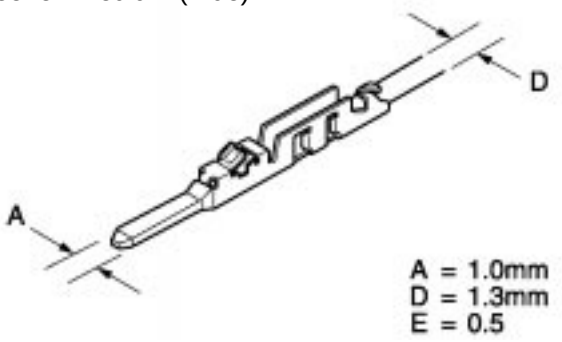	**Sleeve** : Medium (Blue) 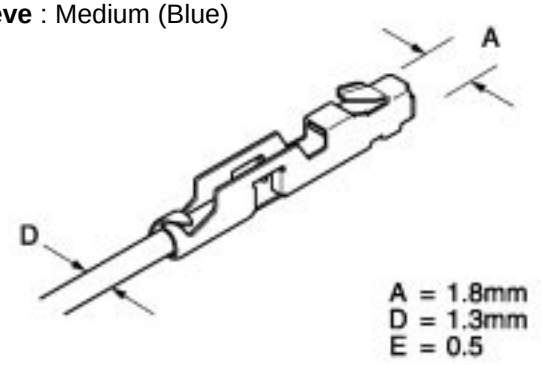
P/N	82998–12660	82998–12640
Type	**1.0IV**	
	Male	Female
		Sleeve : Medium (Blue) 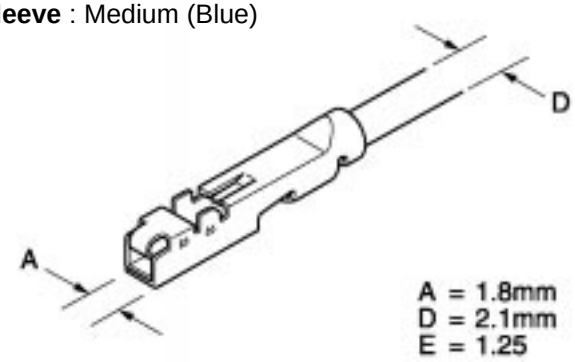
P/N		82998–12740
Type	**1.3**	
	Male	Female
	Sleeve : Medium (Blue) 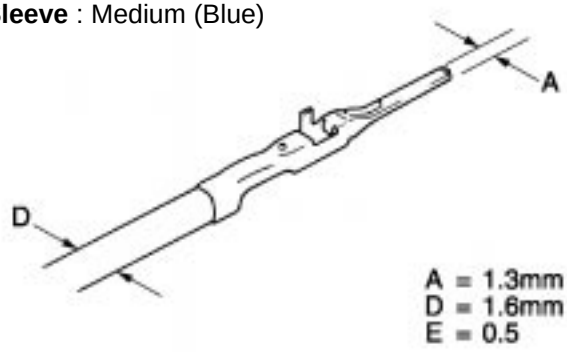	**Sleeve** : Medium (Blue) 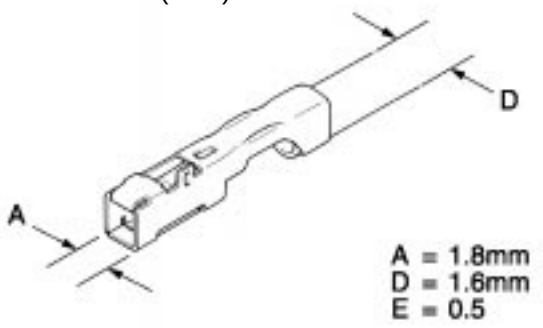
P/N	82998–12410	82998–12420

F

Repair Wire (Non–waterproof Type)

Type	1.8	
	Male	Female
	Sleeve : Medium (Blue) 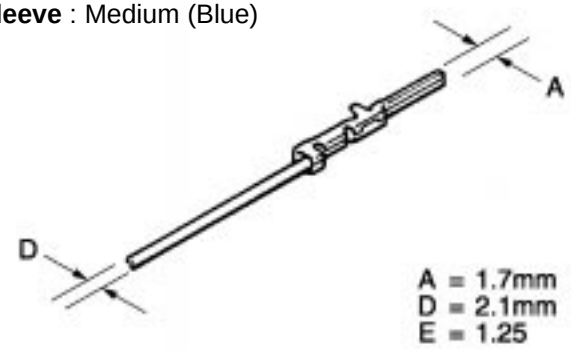	**Sleeve** : Medium (Blue) 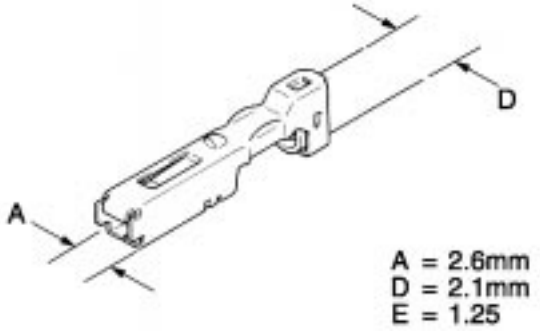
P/N	82998–12180	82998–12190 82998–12300*
Type	**1.8II**	
	Male	Female
	Sleeve : Medium (Blue) or Large (Yellow) **Size : S, M** 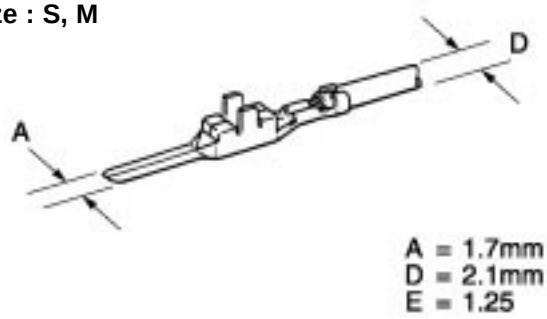	**Sleeve** : Medium (Blue) or Large (Yellow) **Size : S, M** 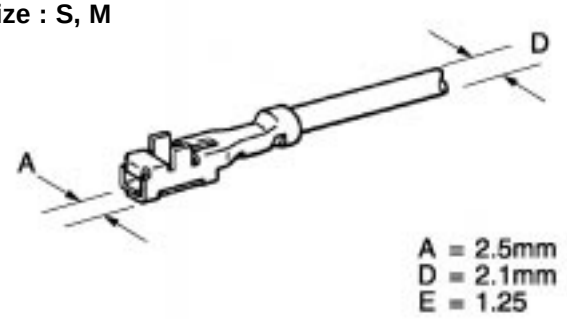
P/N	82998–24090 82998–24130*	82998–24100
Type	**1.8II**	
	Male	Female
	Sleeve : Medium (Blue) or Large (Yellow) **Size : L** 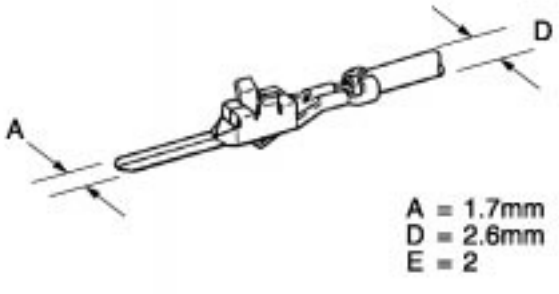	**Sleeve** : Medium (Blue) or Large (Yellow) **Size : L** 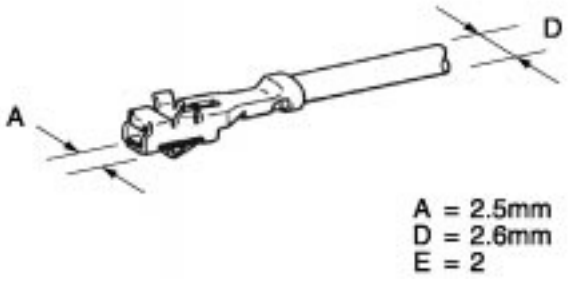
P/N	82998–24030	82998–24040

F

Repair Wire (Non–waterproof Type)

Type	2.3	
	Male	Female
	Sleeve : Medium (Blue) 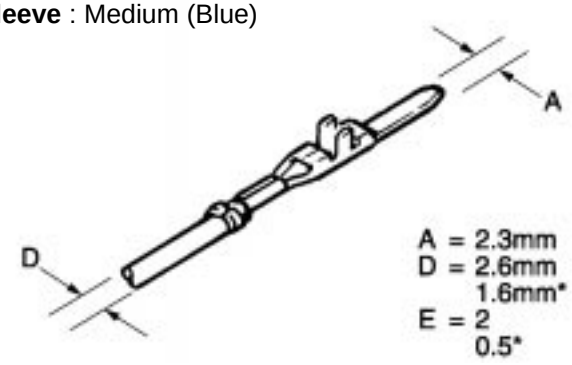	**Sleeve** : Medium (Blue) 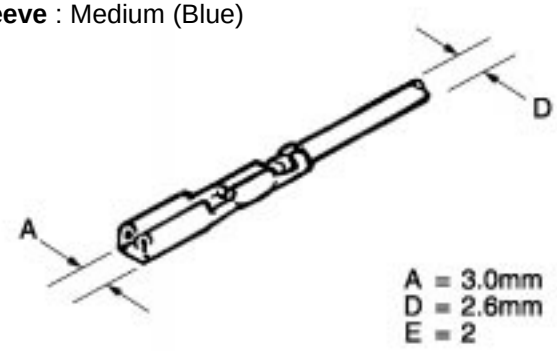
P/N	82998–12160 82998–24050*	82998–12170
Type	**2.3II**	
	Male	Female
	Sleeve : Medium (Blue) or Large (Yellow) 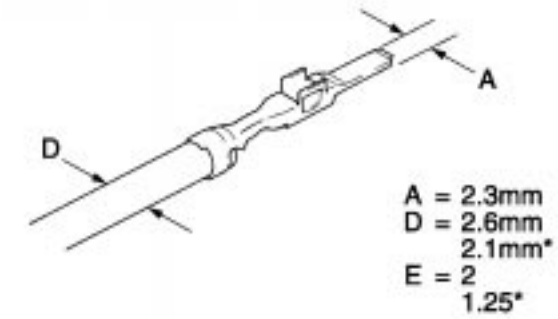	**Sleeve** : Medium (Blue) or Large (Yellow) 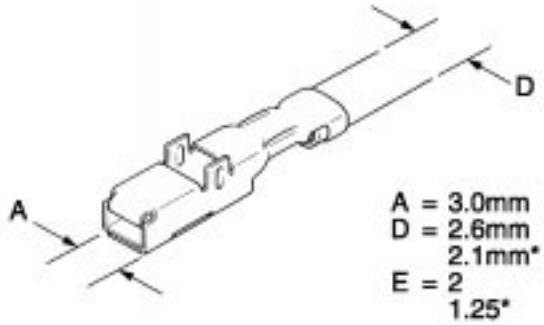
P/N	82998–12330 82998–12350*	82998–12340 82998–12360*
Type	**2.3II IDC**	
	Male	Female
		Sleeve : Medium (Blue) 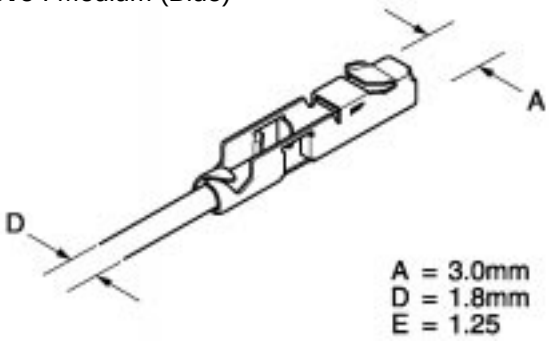
P/N		82998–24220

Repair Wire (Non–waterproof Type)

Type	4.8	
	Male	Female
	Sleeve : Large (Yellow) 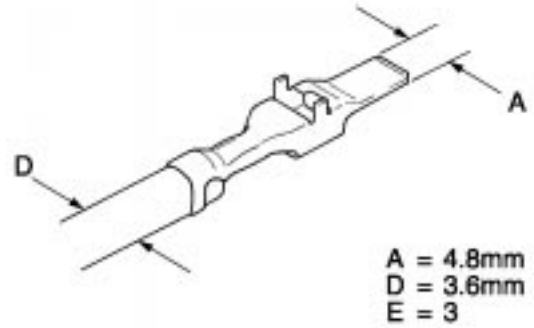	**Sleeve** : Large (Yellow) 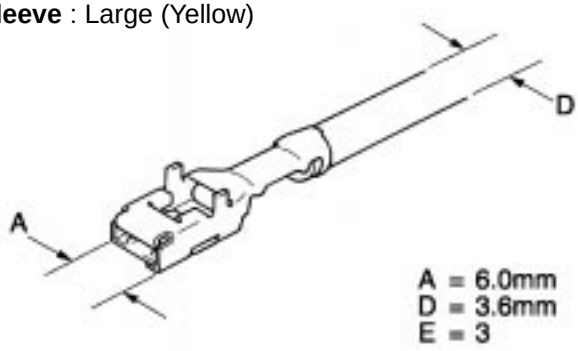
P/N	82998–12370	82998–12380
Type	**6.3**	
	Male	Female
	Sleeve : Large (Yellow) 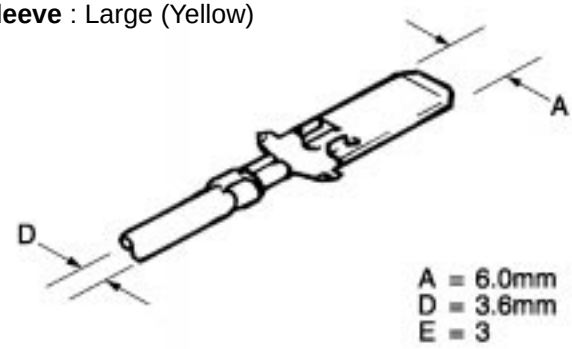	**Sleeve** : Large (Yellow) 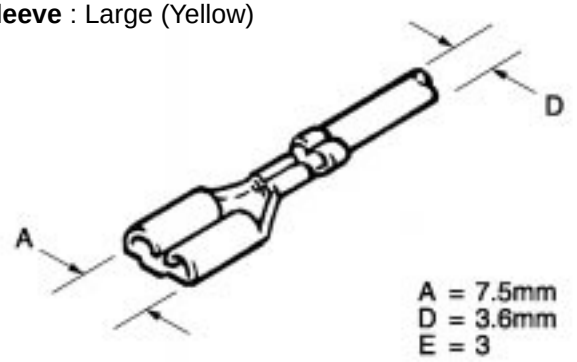
P/N	82998–12050	82998–12060(160mm) 82998–12580(500mm)
Type	**6.3**	
	Male	Female
		Sleeve : Large (Yellow) 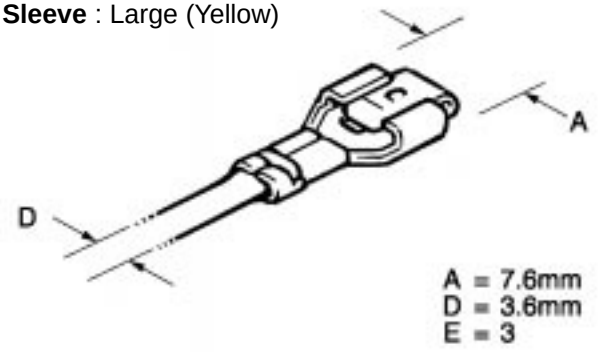
P/N		82998–12070

Repair Wire (Non–waterproof Type)

Type	6.3II	
	Male	Female
		Sleeve : Large (Yellow) 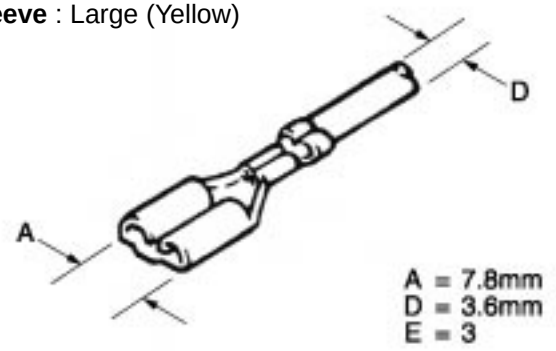
P/N		82998–24170
Type	**7.7 Terminal Lance**	
	Male	Female
	Sleeve : Large (Yellow) 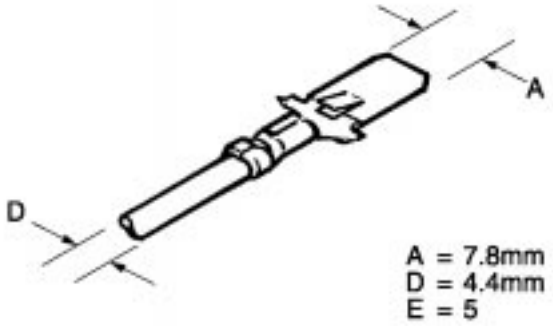	**Sleeve** : Large (Yellow) 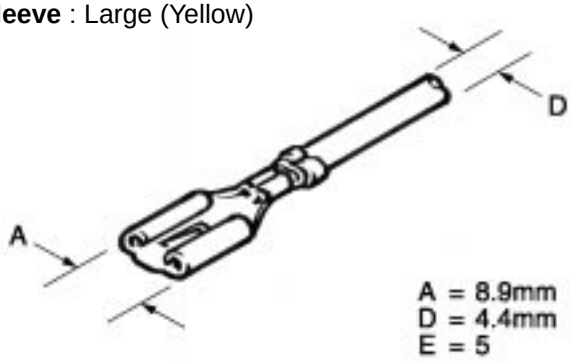
P/N	82998–12010	82998–12020
Type	**7.7 Housing Lance**	
	Male	Female
	Sleeve : Large (Yellow) 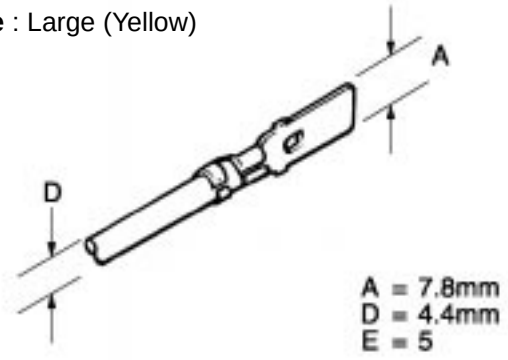	**Sleeve** : Large (Yellow) 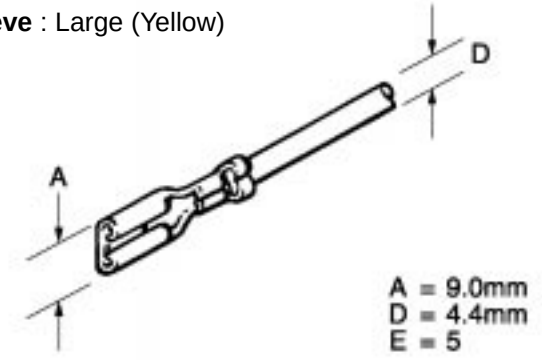
P/N	82998–12030	82998–12040

Repair Wire (Non–waterproof Type)

Type	8.0	
	Male	Female
	Sleeve : Large (Yellow) 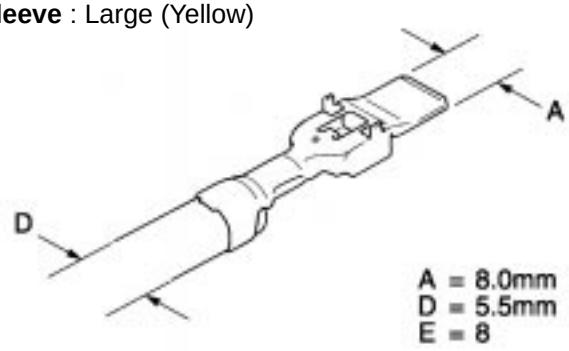	**Sleeve** : Large (Yellow) 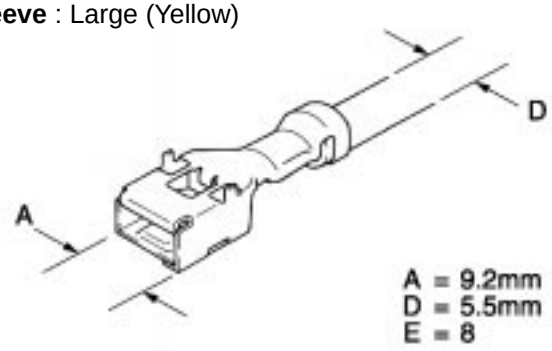
P/N	82998–12390	82998–12400
Type	**BLADE FUSE**	
	Male	Female
		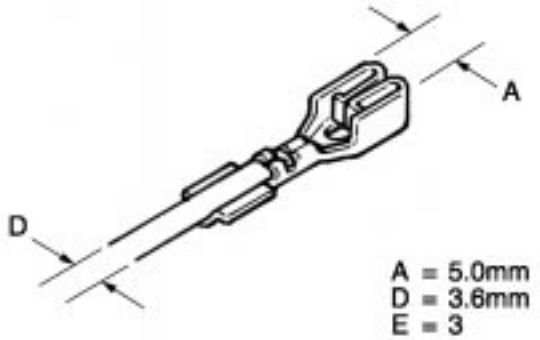
P/N		82998–12140
Type	**C–Type**	
	Male	Female
	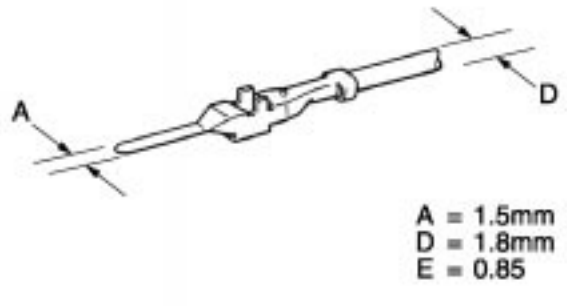	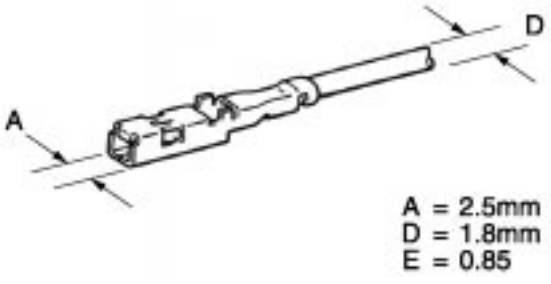
P/N	82998–12560	82998–12570

Repair Wire (Non–waterproof Type)

Type	FOG–LP	
	Male	Female
		Sleeve : Medium (Blue) or Large (Yellow) 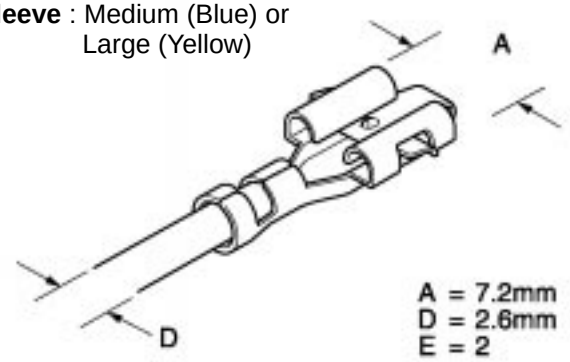
P/N		82998–24210
Type	**FTC**	
	Male	Female
		Sleeve : Medium (Blue) or Large (Yellow) 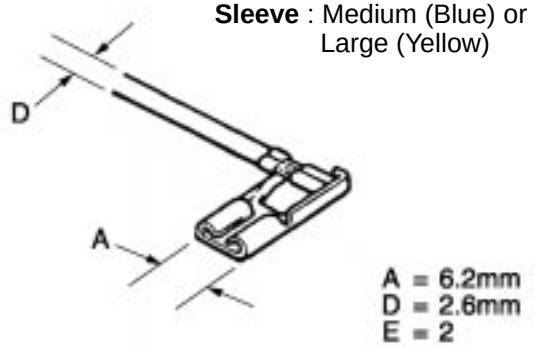
P/N		82998–12510
Type	**HEAD LAMP**	
	Male	Female
		Sleeve : Medium (Blue) or Large (Yellow) 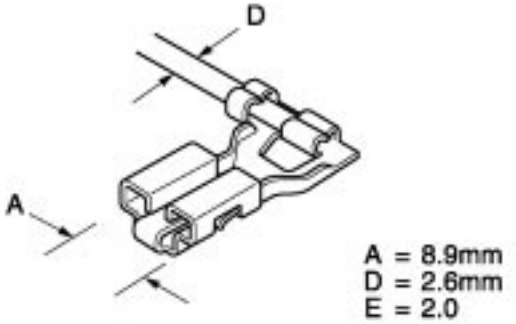
P/N		82998–24140(160mm) 82998–24200(500mm)

Repair Wire (Non–waterproof Type)

Type	LAC	
	Male	Female
	Sleeve : Medium (Blue) or Large (Yellow) 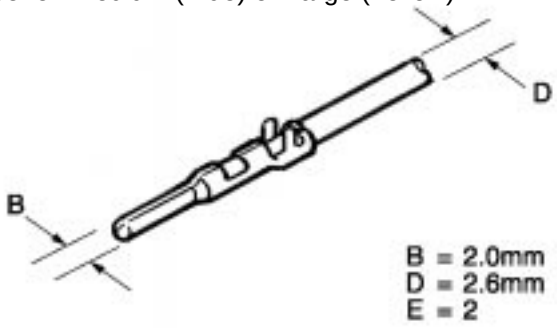	**Sleeve** : Medium (Blue) or Large (Yellow) 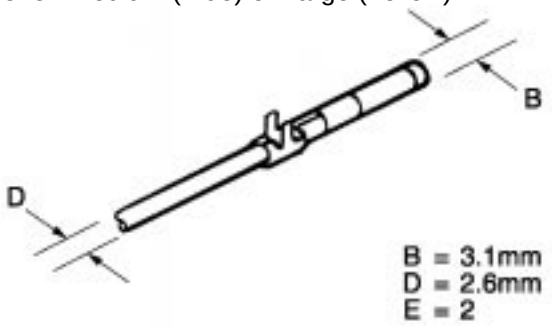
P/N	82998–12100	82998–12110
Type	**MFPC**	
	Male	Female
		Sleeve : Medium (Blue) 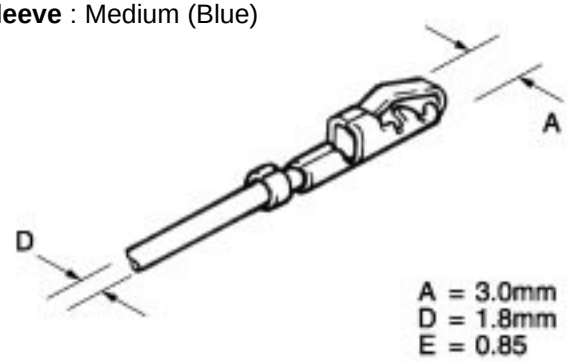
P/N		82998–12150
Type	**MIC**	
	Male	Female
		Sleeve : Medium (Blue) or Large (Yellow) 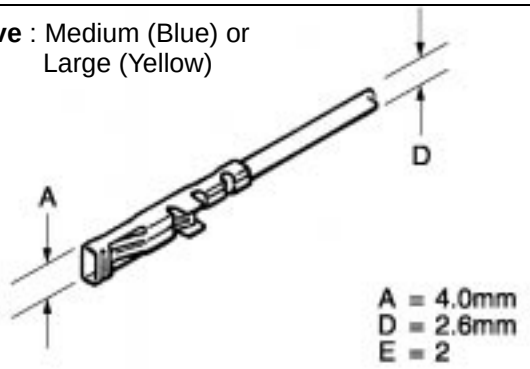
P/N		82998–12120

Repair Wire (Non–waterproof Type)

Type	PULSE LOCK	
	Female (Power)	Female (Signal)
	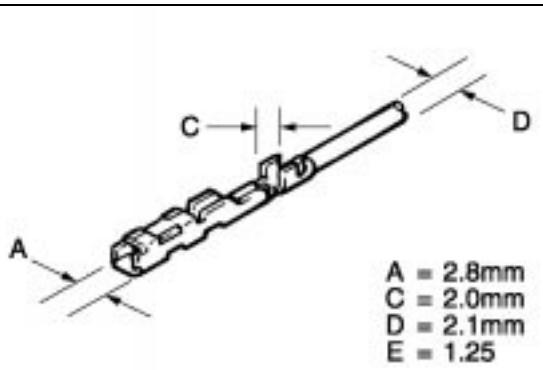	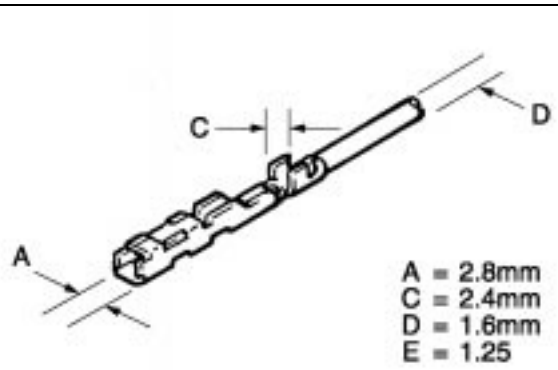
P/N	82998–12200	82998–12210
Type	SFPC	
	Male	Female
		Sleeve : Medium (Blue) 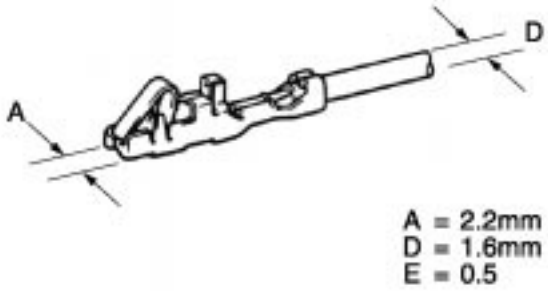
P/N		82998–24180
Type	SL	
	Male	Female
		Sleeve : Medium (Blue) or Large (Yellow) 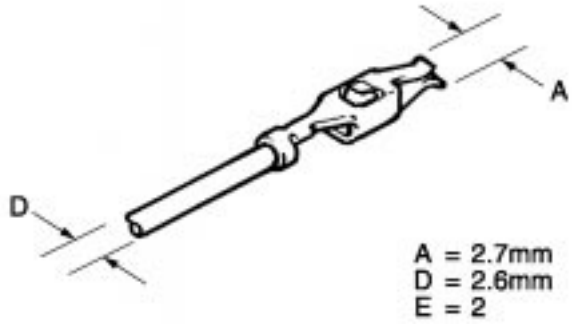
P/N		82998–12130

Repair Wire (Non–waterproof Type)

Type	**SP**	
	Female (Power)	Female (Signal)
	Sleeve : Medium (Blue) or Large (Yellow) 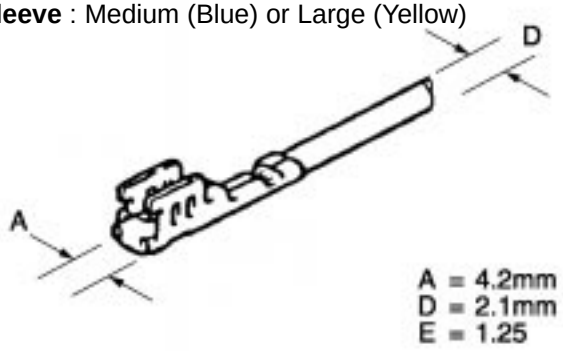	**Sleeve** : Medium (Blue) or Large (Yellow) 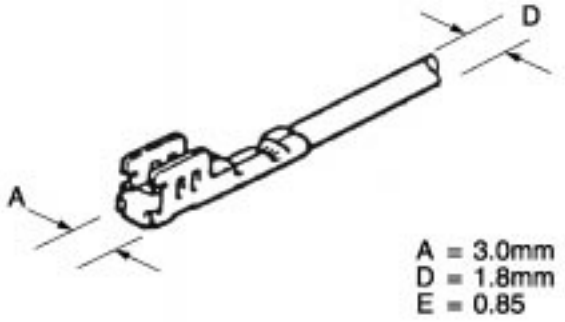
P/N	82998–12520	82998–12530
Type	**TLC**	
	Male	Female
	Sleeve : Medium (Blue) 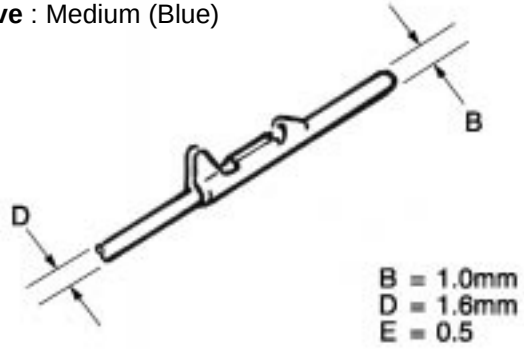	**Sleeve** : Medium (Blue) 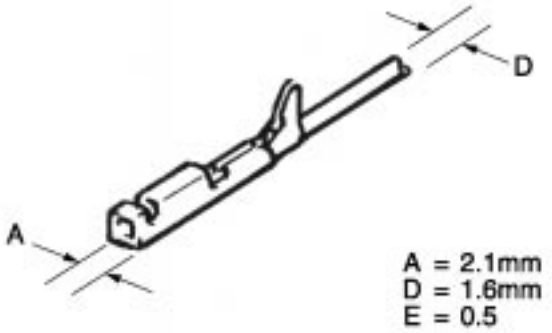
P/N	82998–12220	82998–12230
Type	**TNS**	
	Male	Female
	Sleeve : Medium (Blue) 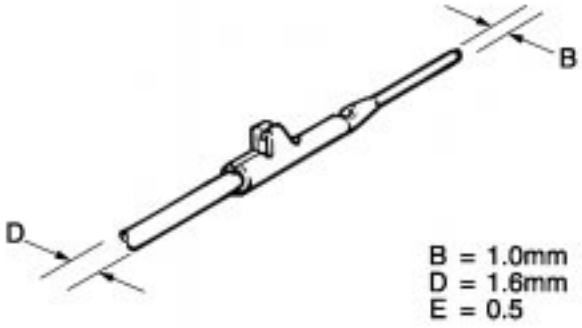	**Sleeve** : Medium (Blue) 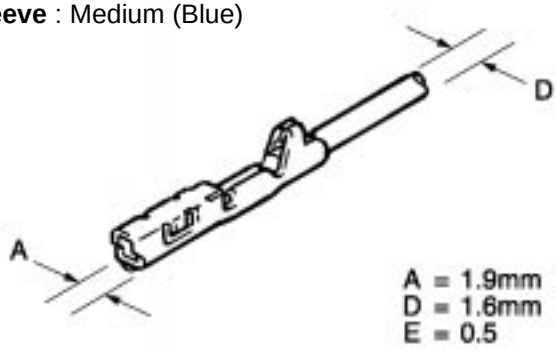
P/N	82998–12240	82998–12250

Repair Wire (Non–waterproof Type)

Type	TODC	
	Male	Female
	Sleeve : Medium (Blue) or Large (Yellow) 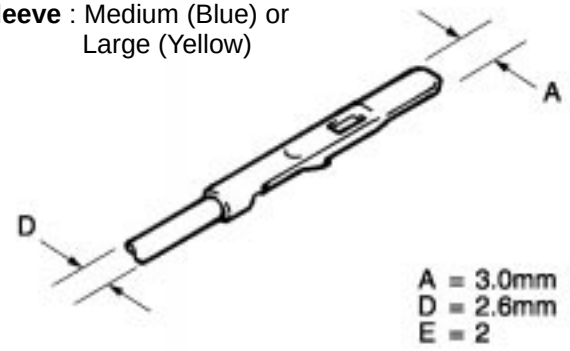	**Sleeve** : Medium (Blue) or Large (Yellow) 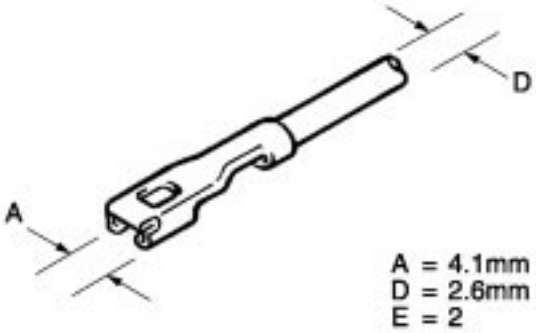
P/N	82998–12080	82998–12090

WIRE HARNESS REPAIR KIT WITH CASE (REFERENCE ONLY)

We would like to recommend to you use of the ”Wire Harness Repair Kit with the Case” according to your after service market demand.

Example:

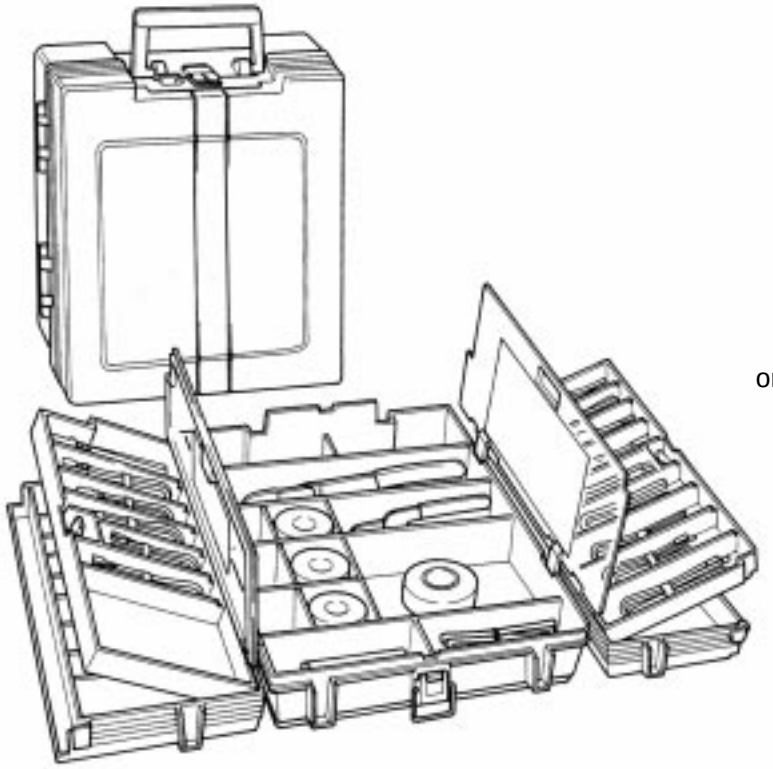

[portable type]

or



[stationary type]

Remark: This kind of kit is not available from Toyota Motor Corporation.

Waterproof Type [1]

(Cont. next page)

	1	2				3		4	5	6	7	8	9	10	11
1.0															
1.0 III		M:11863	F:11856												
1.3		M:11188 F:11189				M:11169 F:11170		M:11063 F:11065	M:11181 F:11182		M:11171 F:11172		M:11191 F:11192		M:11173 F:11174
								M:11064 F:11066							
1.8		F:10737						F:10711							
		F:11062													
2.3		M:10495 F:10496	M:10580	F:10609				M:10475 F:10476		M:10650					
		F:10474	M:10592	F:10532				M:10590							
		M:10575	F:10598	F:10572				M:10648							
2.3 II	M:10892 F:10893	M:10842 F:10843	M:11486 F:11019	M:11247 F:11248	F:11207	M:11015 F:11016	F:11143	M:10868 F:10869	M:11078 F:11077	M:10987 F:10988	M:10930 F:10931	M:10890 F:10891		F:11231	
	M:11006 F:11007	M:10886 F:10887	M:11029 F:11030	M:11272 F:11273	F:11235	M:11131 F:11132	F:11145	M:10941 F:10942	F:11024	M:11033 F:11034		M:10890 F:11190			
	M:11270 F:11271	M:10898 F:10899	M:11137 F:11038	F:10974	F:11246	M:11244 F:11245	F:11261	M:11027 F:11028	F:11049	M:11193 F:11194		M:10896 F:10897			
	F:11166	M:10900 F:10901	M:11050 F:11051	F:11025	F:11250	M:11295 F:11245	F:11294	M:11122 F:11037	F:11232	M:11196 F:11197					
	F:11243	M:11072 F:10923	M:11069 F:11070	F:11068	F:11255	F:10834	F:11349	M:11177 F:11178	F:11317	M:11289 F:11290					
	F:11363	M:10959 F:10947	M:11073 F:11075	F:11140	F:11285	F:10845	M:11348	M:11291 F:11292	F:11599	F:10854					
	F:11428	M:10948 F:10949	M:11074 F:11075	F:11149	F:12028	F:10902		F:10943		F:11144					
	F:11252	M:11002 F:11003	M:11141 F:11142	F:11153		F:10919		F:11150		F:11858					
		M:11004 F:11005	M:11155 F:11156	F:11154		F:10981		F:11152							
		M:11008 F:11009	M:11168 F:11162	F:11163		F:11020									

M : Male F : Female

Waterproof Type [1] (Cont'd)

	12	15	40	80											
1.0			F:11215	F:11214											
1.0 III															
1.3	F:11698	M:11088 F:11089													
1.8															
2.3															
2.3 II	M:11086 F:11087														
	F:11151														

M : Male F : Female

Waterproof Type [2]

	1	2		3		4	5	6	8	9	10	11	23	34	
4.8	M:10982 F:10983	M:10927 F:10928		M:10840 F:10841		M:10989 F:10990									
	F:11400	F:11237		M:10944 F:10841		M:11035 F:11036									
6.3	M:10246 F:10247	M:10156 F:10157		M:10347 F:10249											
7.7	M:10114 F:10115														
8.0	M:10836 F:10837	M:10838 F:10839													
	M:11183 F:11184	M:11031 F:11032													
HB3		F:11095	F:11659												
HB4		F:11096	F:11660												
PIN		M:11945													
TLC				F:10554	M:10577										
TODC	M:10240 F:10241			M:10244	F:10353										
1.0 III+4.8														F:12020	F:12021
2.3+6.3										F:10686					
2.3 II+4.8				M:11160 F:11161		M:10749 F:10844	M:10945 F:10946	F:10939	M:10894 F:10895	F:11643	F:11332	M:11239			
						F:10940	M:11021 F:11022			F:11784					
							M:11412 F:11413								
2.3 II+6.3 II													F:11195		
													F:11323		
2.3 II+8.0									M:11241 F:11242						
4.8+8.0				M:11044 F:11045		M:11138 F:11139									

M : Male F : Female

Non–waterproof Type [1]

(Cont. next page)

	1	2			3	4	5	6		7	8		9	10	11
1.0															
1.0 II															
1.0 III		M:11967 F:11919				F:11988	F:11921							F:11924	
							F:11909							F:11948	
1.3		M:11211 F:11212			M:11052 F:11053	M:11186 F:11187	F:11319	F:11616		F:11165	M:11532 F:11533	M:11623		F:11450	F:11041
		M:11368 F:11369			F:11471	F:11107					F:10630			F:11642	F:11083
		F:11436				F:11494								F:11657	
1.8															
1.8 II															
2.3		M:10437 F:10355			M:10573 F:10365	F:10504		M:10384 F:10414	F:10672					F:10322	
						F:10601								F:10669	
2.3 II	M:10870 F:10871	M:10824 F:10825	M:10905 F:10906	F:11080	M:10907 F:10908	M:10794 F:10795		M:10796 F:10797	F:10957	M:11528 F:11529	M:10798 F:10799		M:11534 F:11535	M:10800 F:10801	M:10829 F:10830
	M:11026 F:10871	M:10833 F:10825	M:10934 F:10935	F:11098	F:11071	M:10858 F:10795		M:11110 F:10797	F:10964					M:11102 F:10997	M:11538 F:11539
	M:11097 F:10871	M:11299 F:10825	M:11159 F:11148	F:11227	F:11079	M:11399 F:10795		M:11099 F:10933	F:11280					M:11536 F:11537	F:10966
	M:11146 F:11147	M:11300 F:10825	F:10823	F:11278		M:11012 F:11013		M:11101 F:10996						F:10822	
		M:10849 F:10850	F:10835	F:11608		M:11023 F:10904		M:10998 F:11001						F:10965	
		M:10859 F:10860	F:10855			M:11100 F:11090		M:11010 F:11011							
		M:11060 F:10860	F:10962			M:11085 F:10789		M:11587 F:11011							

M : Male F : Female

Non–waterproof Type [1] (Cont'd)

	12		13	14	15	16	17	18	19	20	21	22	25	28	34
1.0	F:11129					F:10764									
1.0 II	F:11408					F:11219						F:11220		F:11218	F:11221
						F:11391									
1.0 III				F:11925				F:11914				M:11962 F:11927			
				F:11911				F:11913				M:11926 F:11915			
1.3				M:11654 F:11556	F:11179	M:11573 F:11574			M:11570 F:11571		F:11125	M:11503 F:11502	M:11133 F:11055		
					F:11264							F:11628	F:11043		
1.8	F:10658	F:10973		F:10697				F:10656		F:10696					M:10722
	F:10743														
1.8 II	F:11424			F:11433											
2.3	M:10513 F:10432							M:10325 F:10326							
2.3 II	M:10802 F:10803		M:10804 F:10805	M:10806 F:10807	M:10827 F:10828	M:10808 F:10809	F:11417	M:10818 F:10819		M:10810 F:10811		M:10977 F:10875			
	M:11530 F:11531		M:11541 F:11542	F:10852		M:11167 F:10848				M:10820 F:10821		F:11552			
	F:10967		F:11604												
	F:10968														
	F:11121														
	F:11661														

M : Male F : Female

Non–waterproof Type [2]

	1	2	3	4	5	6		8	9	10	12	13	14	17	22
4.8	M:11258 F:11259	M:10915 F:10916	F:10980	M:11135 F:11136		M:10975 F:10976	F:11778	M:10963 F:10926		M:10861 F:10862					
	F:10911	M:11093 F:11094		M:11878 F:11742		F:11091		F:11092							
	F:10912					F:11583		F:11615							
								F:11686							
6.3	M:10178 F:10179	M:10213 F:10214	M:10283 F:10216			M:10172 F:10173		M:10174 F:10175		M:10176 F:10177					
	F:10619														
	F:10786														
	F:10792														
7.7		M:10356 F:10357													
8.0	M:10994 F:10995	M:10958 F:10903	F:10956	M:10866 F:10867											
		M:11655 F:11579	F:11314												
		F:11684	F:11685												
FOG–LP		F:10481													
FTC			F:10489		F:10487										
			F:10490		F:10488										
HEAD–LANP			F:10428												
LAC									F:10133			F:10132			M:10131
LC						M:10289									
MFPC				F:10645				F:10301		F:10302	F:10303		F:10369		
										F:10304	F:10372				

M : Male F : Female

Non–waterproof Type [3]

(Cont. next page)

	1	2	3	4	5	6	7	8	9	10	12	13	14	15	16
MIC				F:10378					F:10152			F:10062			
OBD II															F:11665
PULSE LOCK										F:10294	F:10351		F:10371		
SFPC										F:11116		F:11114			F:11113
												F:11115			
SL			F:10070				F:10071								
SP		F:10362			F:10376										
TLC						M:10401 F:10402				M:10719 F:10528					F:10635
TNS				M:10466 F:10467									M:10470 F:10471		
TODC	M:10182 F:10183				M:10040 F:10274				M:10044 F:10045						
1.0+1.8															
1.0 II+1.8 II													F:11225		F:11565
1.0 III+2.3 II															
1.3+2.3 II										M:11613				F:11042	
														F:11056	
2.3+6.3								F:10463							

M : Male F : Female

Non–waterproof Type [3] (Cont'd)

	17	18		20	22	23	24	25	26		32				
MIC	F:10037														
OBD II															
PULSE LOCK		F:10295					F:10296								
		F:10350													
SFPC															
SL															
SP															
TLC															
TNS					M:10552 F:10526				M:10599 F:10587						
TODC															
1.0+1.8					F:10765				F:10925	F:10918					
									F:10763						
1.0 II+1.8 II		M:11223 F:11226	M:11223 F:11224		F:11392				F:11390	F:11423	M:11222				
1.0 III+2.3 II								F:11877							
1.3+2.3 II	F:11671	F:11594		F:11469		M:10920 F:10921		M:11158 F:11058							
		F:11595		M:11504 F:11469		M:11208 F:10921									
2.3+6.3															

M : Male F : Female

Non–waterproof Type [4]

	4	5	6	8	10	11	12	14	15	16	19	20	24	26	
2.3 II+4.8	M:11126 F:11118	M:10985 F:10986		M:10876 F:10877	M:11596 F:11527	M:10872 F:10873	M:10878 F:10879	M:10812 F:10813	M:10814 F:10815	M:10884 F:10885	M:10882 F:10883	M:10816 F:10817	M:10880 F:10881	M:11631	
				F:11130	F:10993		F:10932								
				F:11279											
				F:11701											
2.3 II+8.0			M:10909 F:10910								M:10856 F:10857				
4.8+8.0		F:10888	F:10889												
6.3+7.7			F:10447												

M : Male F : Female

Terminal Packing

Type	6.3	
Cav. No.	1	3
		
P/N	90980–09210	90980–09211
Type	7.7	
Cav. No.	1	
		
P/N	90980–09380	
Type	TODC	
Cav. No.	1	3
		
P/N	90980–09378	90980–09379

Terminal Packing

Type	**2.3**	
Cav. No.	1	
	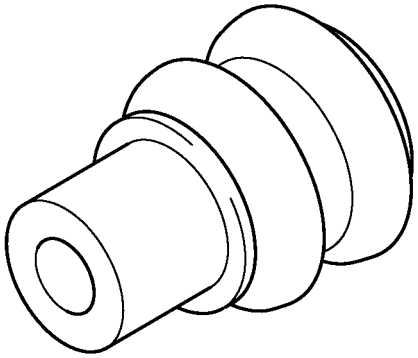	
P/N	90980–09148, 09151, 09149	
Type	**2.3II**	
Cav. No.	1	
	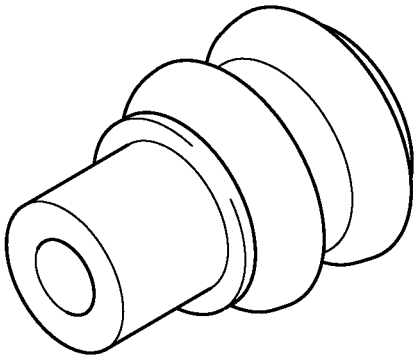	
P/N	90980–09451	
Type	**HB3, HB4**	
Cav. No.	1	
	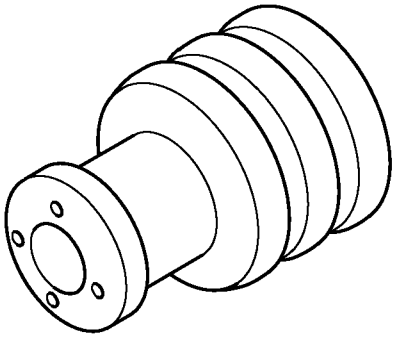	
P/N	90980–09396	

Hole Plug

Type	**6.3, 7.7, TODC**	**4.8**
		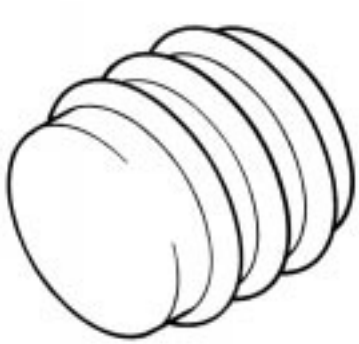
P/N	90950–01730	90980–09325
Type	**8.0**	**2.3, 2.3II**
	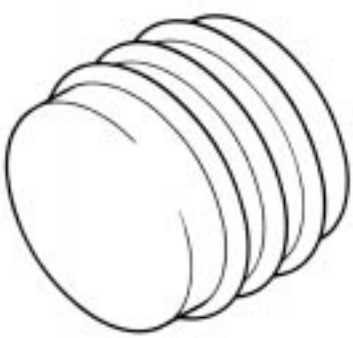	
P/N	90980–09353	90980–09152
Type	**TLC**	**1.3**
		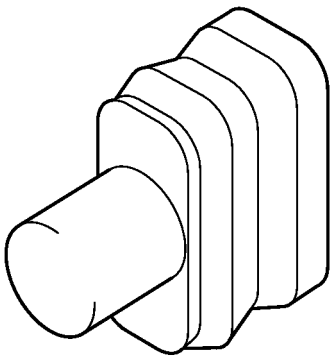
P/N	90980–09162	90980–09414

Press Sleeve

Color	YELLOW	BLUE
		
P/N	82999–12030	82999–12020
Color	RED	
		
P/N	82999–12010	